Aviation Recorders

DRAFT

Iridium ® Welcome Package

Airbus Iridium SATCOM System

communications
Aviation Recorders

100 Cattlemen Road, Sarasota, Florida 34232
Telephone: 941-371-0811 Facsimile: 941-377-5591

Welcome!

Dear Valued Customer,

All of us at L-3 Aviation Recorders take this opportunity to say “thank you” for your selection of the L-3 Airbus Iridium Satellite Communication (SATCOM) system.

This SATCOM system, also identified as the Automated Flight Information & Reporting System (AFIRS), is a multi-function voice and data communication system that provides a link between the aircraft and ground using the existing Iridium satellite constellation. The system consists of:

- Satellite Data Unit (SDU)
- SDU Configuration Module (SCM), which houses the system SIM card
- Iridium Antenna
- Coaxial Cable

These system elements are described in further detail in the following sections of this Welcome Kit package. The system performs the following primary functions:

Satellite Phone

The Iridium SATCOM System contains a single-channel Iridium satellite phone along with an internal Private Branch Exchange (PBX) system. The AFIRS 228 SDU includes telecom functions integrated into the cockpit audio system for the flight crew and separate calling capability through conventional two-wire “tip and ring” telephony devices. Cockpit dialing and control functions can be performed by using the aircraft's Multipurpose Control Display Units (MCDUs). Up to two wired or eight cordless handsets can be added in the cabin for intercom, call transfer, conference calling, camp-on calling and noise-cancelling features. The aircraft can call or be called from any conventional telephone, as well as any other similarly-equipped aircraft. This provides the crew with worldwide access to MedLink or other emergency medical services.

ACARS Satellite Data Unit

For ACARS-equipped aircraft, the Iridium SATCOM System can function as a standard ARINC 741/761 Satellite Data Unit (SDU) when interfaced to the aircraft's ACARS Communication Management Unit (CMU). The system uses a dedicated Iridium satellite channel for data services. The Iridium SATCOM System receives messages from the CMU, prioritizes the messages, and transmits them over the Iridium satellite link. ACARS messages received from the satellite link are routed to the CMU for processing.

communications
Aviation Recorders

100 Cattlemen Road, Sarasota, Florida 34232
Telephone: 941-371-0811 Facsimile: 941-377-5591

Electronic Flight Bag (EFB) Interface

If desired, the Iridium SATCOM System SDU provides an EFB with an interface to the EFB message transport system. An Ethernet port provides the physical connection between the devices – using industry standard IEEE 802.3 LAN technologies. Once physically connected, the SDU routes to the EFB a web-based portal that can be accessed by EFB applications using a defined IP based protocol, supporting text messaging and other functions.

L-3 Aviation Recorders manufactures and services the Iridium SATCOM system. To learn more about L-3 products, please visit the company's website at: http://www.l-3ar.com/ .

This Welcome Package includes the following useful information for you to obtain support for effective operation of your Iridium SATCOM system:

- L-3 Contact Information
- Authorized Service Facility Information
- Compliance Package (Export Compliance Certification, End-Use/User Statement)
- Technical Documentation (Quick Guide, and Installation & Operation Manual)
- Customer Training Schedule
- CD – includes all Welcome Package documentation & a Component Maintenance Manual

Thank you again for your interest in our products. We look forward to working with you to bring your new Airbus Iridium SATCOM System on-line in your fleet operations, and to meeting your needs and expectations in the support and service of your Airbus Iridium SATCOM System.

Mike Phillips

Product Support Manager
L-3 Aviation Recorders

communications
Aviation Recorders

100 Cattlemen Road, Sarasota, Florida 34232
Telephone: 941-371-0811 Facsimile: 941-377-5591

Table of Contents

This Welcome Package includes the documents listed in the table below.

Keep in mind, these documents may not be the latest up-to-date revisions. Please check the L-3 Customer Support website for the latest update available at: http://www.l-3ar.com/customer/index.htm

Documents

Welcome Letter
L-3 Contact Details
Airbus Iridium SATCOM System Quick Start Guide
Iridium SIM Card Registration
Installation Manual Airbus Iridium SATCOM System
Airbus Iridium SATCOM System Component Maintenance Manual

Aviation Recorders

Sarasota, Florida 34232
CAGE Code 06141
Phone: (941) 371–0811 | FAX: (941) 377–5591
http://www.l-3ar.com/

Iridium Customer Support

Technical support, Reliability, Product support

Daren Welker
Product Support Engineer

Phone 941.379.1620
Cell 941.372.2313
Fax 941.377.5591
Email daren.welker@l-3com.com

Carlo Mammelli
Publications Supervisor

Phone 941.377.5550
Cell 941.726.9050
Fax 941.377.5591
Email charles.mammelli@l-3com.com

Dave Dowding
Senior Product Support Engineer

Phone 941.377.5551
Cell 941.284.3048
Fax 941.377.5591
Email david.dowding@l-3com.com

Mike Phillips
Product Support Manager

Phone 941.377.5547
Cell 941.726.0107
Fax 941.377.5591
Email mike.phillips@l-3com.com

Technical Documentation

For access to Technical documentation, please log on to:
Website: **http://www.l-3ar.com/customer/technical.htm**

For specific requests on technical documentation, contact:
Email: ***charles.mammelli@l-3com.com***

Training

Customer Iridium Operator training is provided three (3) times a year at the L3AR Facility in Sarasota, FL.

2014 Training Dates

Feb. 18-20, 2014
Jun. 23-25, 2014
Oct. 20-22, 2014

For more details concerning L3AR Training please use this link:
Website: **http://www.l-3ar.com/services/training_aviation.htm**

For questions about product training, contact:
Email: **daren.welker@l-3com.com**

Aviation Recorders

Sarasota, Florida 34232
CAGE Code 06141
Phone: (941) 371–0811 | FAX: (941) 377–5591
http://www.l-3ar.com/

Authorized Service Facility

A European service facility will be established later in 2014. Until such time, all Iridium repairs will be performed at L-3 Factory.

Address:
L-3 Communications Aviation Recorders
100 Cattlemen Rd. Sarasota, Florida 34232
Attention: Repair Station – 941-377-5517

Repair Station Manager: Gerald Godbee
Phone: 941.377.5531Email: gerald.godbee@l-3com.com

Airbus Iridium SATCOM System Quick Start Guide

SDU L-3 part number 228E5733-00

SCM L-3 part number 418E5733-00

SECTION 1 - OVERVIEW

1. Airbus Iridium SATCOM System Overview

The Airbus Iridium SATCOM System will be certified to TSO C-159a for voice and data safety-services. It has a dual-channel Iridium link, one dedicated for data - with the capability to send and receive standard ACARS messages between the aircraft's Air Traffic Service Unit (ATSU), and the other prioritized for voice via a certified terrestrial service provider.

The Automated Flight Information Reporting System (AFIRS) provides a satellite voice and data communications (SATCOM) link with the Public Switched Telephone Network (PSTN) via the Iridium® satellite network. The system uses a standard ARINC 741/761 SATCOM interface to the flight crew's Audio Integrating System and ARINC 739A Multi-Purpose Control and Display Units (MCDUs) in the cockpit, as well as providing 3-extension Public Branch Exchange (PBX) capability for up to 2 handsets in the cabin.

Satellite Data Unit (SDU)

2. SDU Configuration Module (SCM)

The SCM is housed in a small enclosure, which is designed to be mounted within 24” of the SDU rear connector. The SCM and antenna connect directly to the SDU. The SDU is the heart of the system and provides all of the interfaces to other aircraft systems.

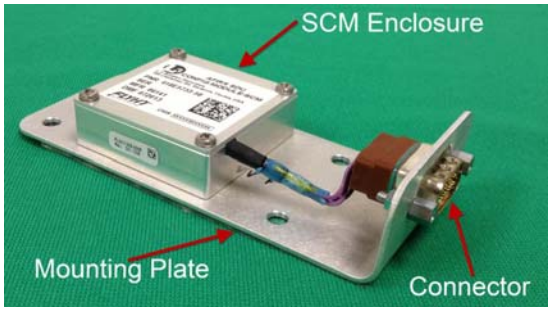

SECTION 2 – SYSTEM CONFIGURATION

You configure the Airbus Iridium SATCOM System Satellite Data Unit (SDU) via Ethernet using a laptop, web browser, and the AFIRS Maintenance User Interface (MUI). An RJ-45 Maintenance Port jack is located behind the access door on the front panel of the SDU.

IMPORTANT: READ BEFORE CONFIGURING SATCOM SYSTEM

- The MUI only accepts English-language characters and numbers.
- The aircraft's status must be deemed "On-Ground" to access Maintenance Mode and make any system changes. If the aircraft is deemed "In-Air", the Enter Maintenance Mode button will be, or will become, unavailable. If the aircraft status changes to "In-Air" while in Maintenance Mode, the system will reboot automatically and return to Operational Mode without saving any changes.
- Entering Maintenance Mode disables all MCDU functions.

1. Install SIM Card

1. Remove the four screws from the plate on the SCM.

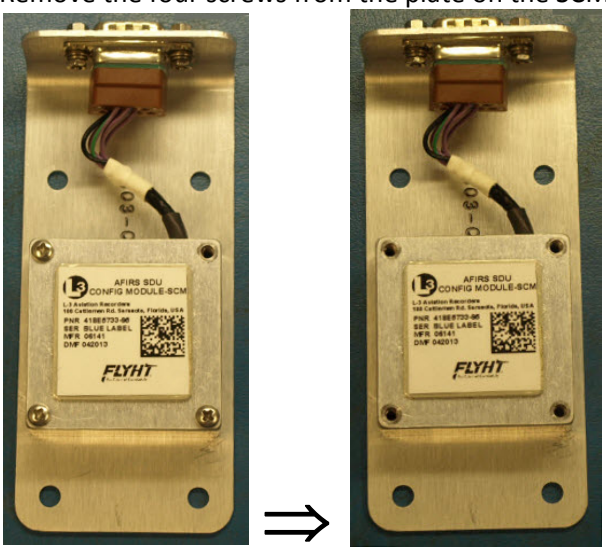

2. Remove the plate on the SCM to reveal the SIM enclosure.

3. Slide the SIM Enclosure to release.

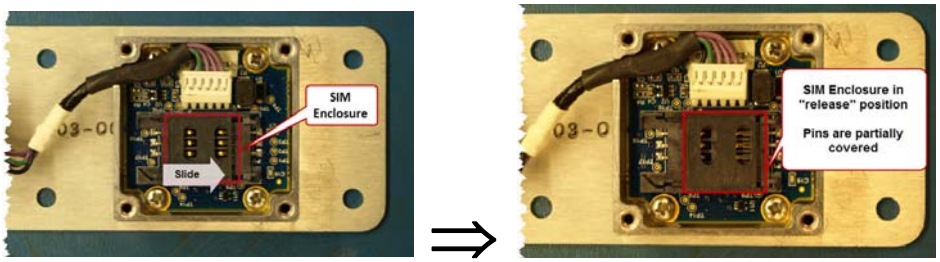

4. Lift the SIM Enclosure.

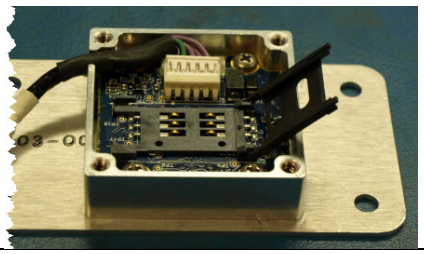

5. Slide the SIM card in the slot. It will fit only one way; do not force.

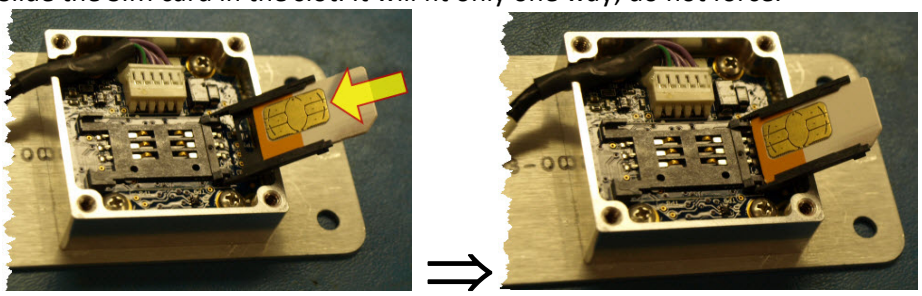

6. Close the SIM Enclosure and slide to the left to lock.

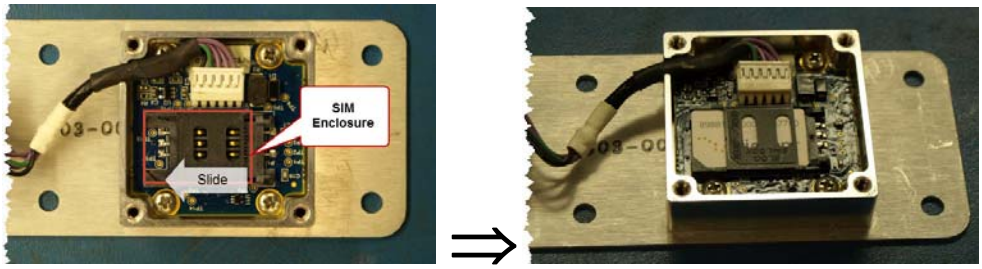

The SIM Card is now installed.

7. Replace the plate.

8. Replace the four screws using a small amount of threading Loctite 222.
9. Proceed to “Access the Maintenance User Interface (MUI)” below.

3. Access the Maintenance User Interface (MUI)

1. With system power on, connect an Ethernet cable to the Maintenance Port via the front panel access door of the SDU.
2. Connect the other end of the cable to a laptop with a web browser (Mozilla FireFox® is recommended).
3. Confirm that the green link light is illuminated. The light can be steady or flashing – flashing means that data is being transmitted.

4. Set the laptop network adapter to the following:
   - IP = 192.168.128.10
   - Subnet Mask =255.255.255.0

Note: The Maintenance port can auto-negotiate the best speed (10/100) and mode (full/half duplex).

5. Open the laptop's web browser and clear the cache.
6. In the Address bar, type the following default IP address: **192.168.128.1.** The Airbus Iridium SATCOM System Home page will display with the General tab information displayed.

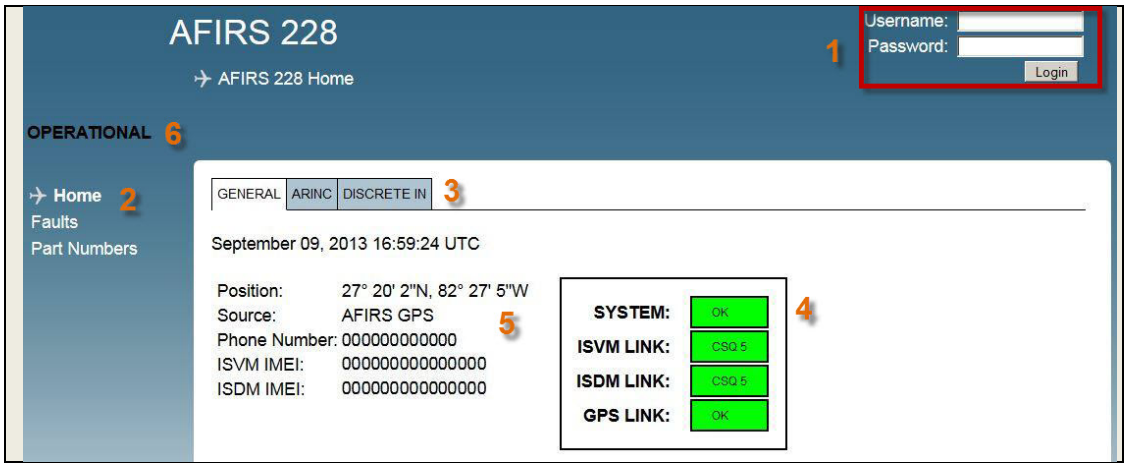

1 - Login area
2 - Menu of available links to pages accessible to various users upon login
3 - Tabs: GENERAL, ARINC, and DISCRETE IN
4 - System and Link status display area
5 - System information data display area
6 - Mode: OPERATIONAL, MAINTENANCE, INITIALIZING, etc.

7. Proceed to "Access Maintenance Mode" below.

4. Access Maintenance Mode – On Ground Status Required

1. You are now connected to the Airbus Iridium SATCOM System MUI Home Page; type the following in the Login fields:
    - Default User Name: **AFIRSMAINT**
    - Default Password: **228MAINT**
2. Click **Login**.
3. Click **Enter Maintenance Mode**. A message displays, prompting for confirmation to enter Maintenance Mode.
4. Click **OK**. The MUI – Maintenance Home Page will display.

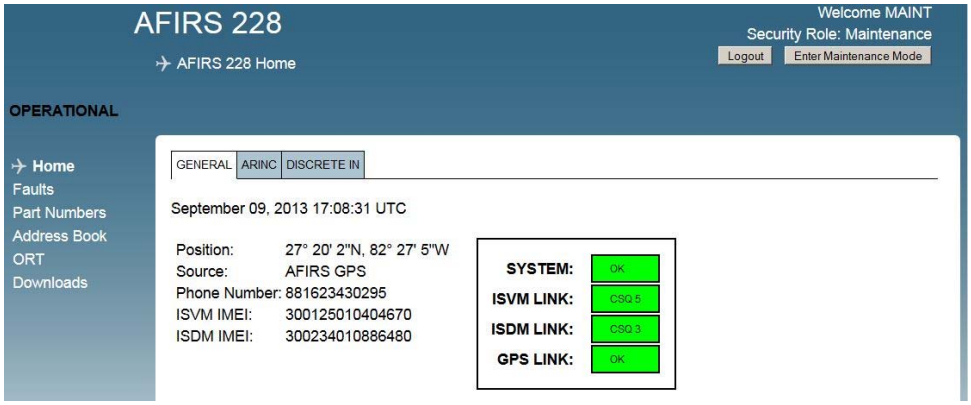

5. Modify Owner Requirements Table (ORT) Parameters

1. You are logged into the MUI as a ***Maintenance User*** from the previous process. You will now be able to customize parameters for the individual aircraft operator based on operational requirements or preferences.
2. Click **Enter Maintenance Mode**. A confirmation message displays.
3. Click **OK**.

4. Click the **ORT** link on the left side of the screen to open the ORT page. The Owner Requirements Table will display.

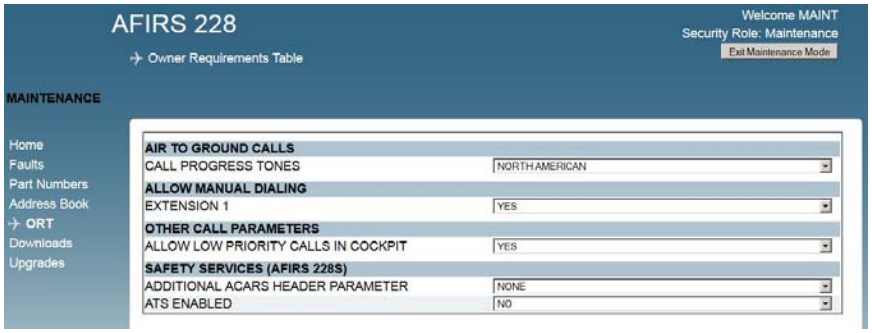

Field	***Available Options***
Call Progress Tones	North American European
Extension 1	Yes – Calls from cockpit can be placed manually No – Calls from cockpit can only be placed from address book
Low Priority Calls	Yes – Low priority calls can be received/made from cockpit No – Low priority calls cannot be received/made from cockpit
Additional ACARS Header	None – SITA Service ARINC – ARINC Service
Air Traffic Service (ATS)	Yes – SIM card with ATS No – SIM card without ATS

6. Create an Address Book

1. Click **Downloads** from the left menu.
2. Choose the **Address Book** option.
3. Click **Download**.
4. Choose the **Save File** option.

5. Click **OK**.
   An Address Book template will download to the computer as a comma-separated-values file (adb.csv). If the computer does not have Microsoft Excel®, the file can be opened as a Microsoft WordPad® file.
   Example of Microsoft Excel® Address Book file.

	A	B	C	D	E	F	G	H
1	Phone Number	Name	Priority	Protected	Directory	Speed Dial 1	Speed Dial 2	Speed Dial 3
2	19413710811	L-3 AVIATION RECORDERS	3	1	3	1	0	0
3	491234567891	CFG DISPATCH	2	1	2	1	0	0
4	449876543211	CFG FLT OPS	1	1	1	1	0	0
5								
6								

   Example of Microsoft WordPad® Address Book file.

```
Phone Number,Name,Priority,Protected,Directory,Speed Dial
1,Speed Dial 2,Speed Dial 3
19413710811,L-3 AVIATION RECORDERS,3,1,3,1,0,0
491234567891,CFG DISPATCH,2,1,2,1,0,0
449876543211,CFG FLT OPS,1,1,1,1,0,0
```

6. Locate and open the adb.csv file.
7. Add entries to the address book (up to 300) and modify as necessary.
   There are no list numbers in the adb.csv file to identify individual entries.
   Important: The template (adb.csv) entries must adhere to the parameters exactly.

Address Book Parameters	
Phone Number	Up to 18 digits (Always include country code)
Name	Up to 23 upper-case alpha-numeric characters (A-Z, 0-9, +, -, /, space)
Priority Use only ATS-enabled Iridium SIM cards.	4 – Public 3 – Non-Safety 2 – Safety 1 – Emergency
Protected	0 – No 1 – Yes
Directory	4 – Public 3 – Non-Safety 2 – Safety 1 – Emergency
Speed Dial 1	1
Speed Dial 2	0 (not currently used)
Speed Dial 3	0 (not currently used)

8. When finished modifying the Address Book, save and close the file.
   Important: The filename **must** remain adb.csv or the file will not load.
9. Click **Upgrades** from the left menu.

10. Click **Browse** and locate the adb.csv file that you just created.
11. Click **Upload**.
12. Click **Apply**.

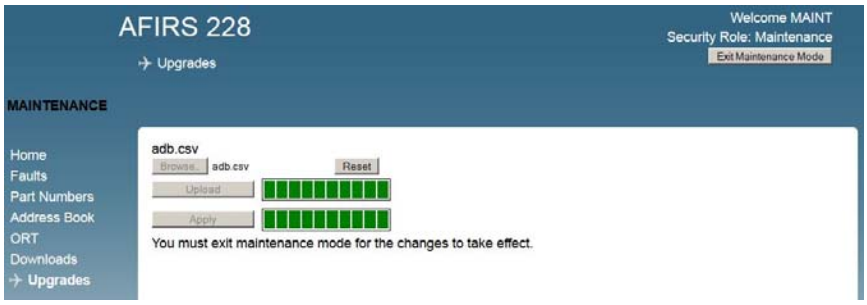

13. Click **Exit Maintenance Mode** when updates are complete. A message displays, prompting for confirmation to exit Maintenance Mode.
14. Click **OK**. The system saves changes, reboots, and returns to Operational Mode.
15. Proceed to “Enter Administrator Role” below.

7. Enter Administrator Role - On-Ground Status Required

1. You are still connected to the Airbus Iridium SATCOM System MUI Home Page; type the following in the Login fields:
    - Default User Name: **AFIRSADMIN**
    - Default Password: **ADMIN228**
2. Click **Login**.
3. Click **Enter Maintenance Mode**.

8. Update User Access Table (UAT) Parameters

The User Access Table (UAT) is used to set up user access privileges for up to 20 users. These settings may be changed as needed to meet operational requirements.

1. Click the **UAT (Security)** link on the left side of the screen to open the UAT page.

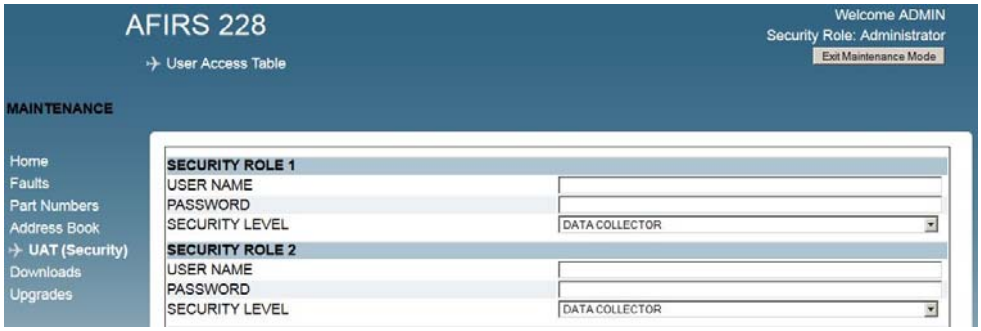

2. Add security roles as necessary based on the following parameters.

Field	Parameter
User Name	4 - 20 upper-case alpha-numeric characters
Password	4 - 20 upper-case alpha-numeric characters
Security Level	Data Collector (default) Maintenance Administrator

Roles	Privileges							
	Modifications				Software/Data Loading (Upload)			
	ORT Parameters	Address Book	UAT (User Access Table)	S/W Upgrades	ICT	ORT (Complete)	ADB (Address Book)	UAT (User Access Table)
Guest (no login required)	No	No	No	No	No	No	No	No
Data Collector	No	No	No	No	No	No	No	No
Maintenance	Yes	No	No	Yes	Yes	Yes	Yes	Yes
Administrator	No	No	Yes	Yes	Yes	Yes	Yes	Yes

Note: All users can download fault logs, except Guest.

3. When finished, click **Exit Maintenance Mode** for the system to reboot and save changes.
4. Proceed to “Section 3 - Testing” or “Download Backup UAT File (Optional)” below.

a. Download Backup UAT File (Optional)

You may want to download a backup UAT file that you could upload in the event that the system file should fail.

1. On the Home Page, type the following in the Login fields:
    - Default User Name: **AFIRSADMIN**
    - Default Password: **ADMIN228**
2. Click **Login**.
3. Click **Downloads**.
4. Select the **UAT** option from the Configurations section.
5. Click **Download.**
6. Choose **Save**.
7. Click **OK**.
8. Proceed to “Section 3 - Testing” below.

SECTION 3 – TESTING

1. Test System Voice Connectivity

Perform the following steps to ensure that the system is working properly. If you do not have voice transmission available, proceed to Test System Data Connectivity. For information on Built-in Tests and Fault Indicators, see the Installation and Operations Manual.

a. Call from Landline Phone to Iridium SATCOM Phone

NON-ATS (Air Traffic Service) SIM

1. Call Iridium Call Service

U.S.	1-480-768-2500
Non-U.S.	001-480-768-2500

2. Enter Iridium 12 digit phone number and follow with the # symbol.

ATS (Air Traffic Service) SIM

1. Call Iridium Call Service

U.S.	1-480-730-3900
Non-U.S.	001-480-730-3900

2. Enter Iridium 12 digit phone number and follow with the # symbol.
3. Enter the following information when prompted and follow each entry with the # symbol. This information is provided by SIM card provider.

- User ID
- PIN
- Priority level
  - Emergency
  - Safety
  - Non-Safety
  - Public
- Plane ID

b. Call from Iridium SATCOM Phone to Landline Phone (Manual)

1. Select Manual Dial from the MCDU screen.

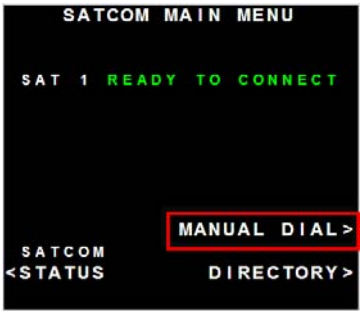

2. Punch in the phone number and select the button directly next to the open field to populate the field.

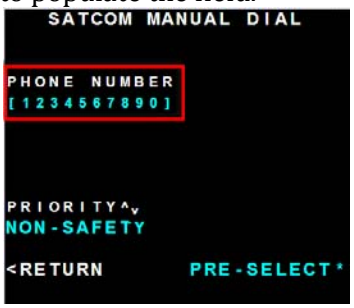

3. Choose a priority by using the Page Up and Page Down buttons.

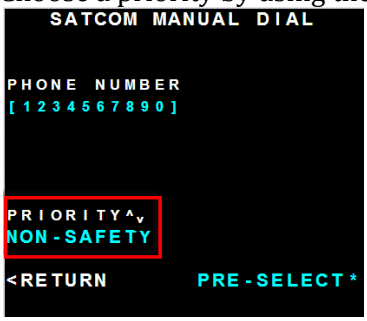

4. Choose Pre-Select.

5. The system is ready to connect the call.

6. Initiate the call.

c. Call from Iridium SATCOM Phone to Landline Phone (Directory)

IMPORTANT: If manual dialing has been disabled, the ability to use dual-tone multi-frequency signaling (DTMF) will also be disabled. This means that you will not be able to punch in an extension number after reaching a switchboard via Directory dialing.

1. Select Directory from the MCDU screen.

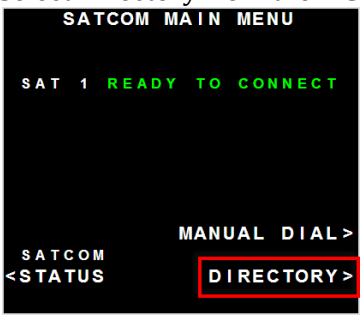

2. Choose a directory.

3. Locate the number to call.

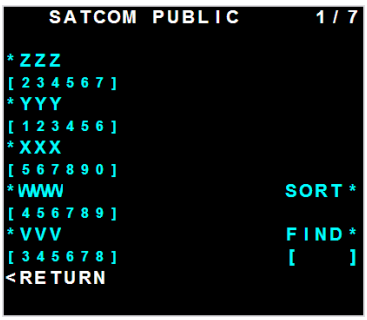

4. Initiate the call.

2. Send Data Message from Iridium SATCOM

1. Go to the MCDU.
2. Choose a free text and send a test message to Dispatch or Maintenance. The system will automatically queue and send the message. Optionally, you can have the message receiver send you a message back.

Iridium Status Indicator Summary

Note: LED indicators require power to the Iridium SATCOM system. Every indicator will be off if no power is applied.

	Indicator Color			
Status Indicator Name	OFF	GREEN	YELLOW	RED
System	Never Off	Operational Mode No Failure/Fault	Initialization Mode or Maintenance Mode or Fault/Event	Critical Failure
ISVM Link	Never Off	Operational Mode No Failure/Fault	Fault/Event	Never Red
ISDM Link	Never Off	Operational Mode No Failure/Fault	Fault/Event	Never Red
GPS Link	Internal GPS Active Parameter Set to Inactive	Operational Mode No Failure/Fault	Fault/Event	Never Red
Ethernet Link (for each port)	Not Used or Fault	Steady = Link OK Flashing = Data Being Transmitted	Never Yellow	Never Red

L-3 Iridium SATCOM System - Built-in Test and Fault Indicators
DATA CHECKS

Indicator Description	
LED Off	Fault/Event
Operational, No Failure/Fault	Critical Failure

Fault Name	BIT Check	Raise Fault/Failure Condition	Clear Fault/Failure Condition	Fault Light Discrete Output (ON / OFF)	Front Panel LEDs: System	ISVM	ISDM	GPS	MCDU Indicators: Operable	SDU	SCM	Comment
CONFIG FAIL	Configuration Table Failure	The “Configuration Table Failure” will be raised if the system is unable to read or write the Configuration Data stored in the memory	The “Configuration Table Failure” cannot be cleared once raised.		Critical Failure	LED Off	LED Off	LED Off	No	N/A	N/A	Critical Error. Verify ICT and ORT files in MUI. If files are valid for A/C, replace SDU.
CONFIG FAULT	SCM Compatibility Fault	The “SCM Compatibility Fault” will be raised if the SDU software load is not compatible with the valid Configuration Data stored in the	The “SCM Compatibility Fault” cannot be cleared once raised.		Fault/Event	LED Off	LED Off	LED Off	No	N/A	N/A	Transition to Configuration Invalid State. Verify software load in MUI.
NVM FAIL	NR-NVM Failure	The “NR-NVM Failure” will be raised if missing or not detected, does not initialize or is judged to be defective.	The “NR-NVM Failure” cannot be cleared once raised.		Critical Failure	Operational, No Failure/Fault	Operational, No Failure/Fault	Operational, No Failure/Fault	Yes	FAIL	OK	Internal memory failure.
FLASH CARD FAULT	Flash card status	Flash card removed or can not be read	Flash card inserted and can be read.		Critical Failure	Operational, No Failure/Fault	Operational, No Failure/Fault	Operational, No Failure/Fault	Yes	FAIL	OK	Verify flash card is inserted and can be read.

L-3 Iridium SATCOM System - Built-in Test and Fault Indicators
POWER CHECKS

					Indicator Description							
					LED Off		Fault/Event					
				Fault Light Discrete Output	Operational, No Failure/Fault		Critical Failure					
				ON OFF	Front Panel LEDs				MCDU Indicators			
Fault Name	**BIT Check**	**Raise Fault/Failure Condition**	**Clear Fault/Failure Condition**		**System**	**ISVM**	**ISDM**	**GPS**	**Operable**	**SDU**	**SCM**	**Comment**
LOW VOLTS	Low Voltage Status	The “Low Voltage Status” will be raised if the system enters the Low Input Voltage state.	The “Low Voltage Status” will be cleared if the system exits the Low Input Voltage state.						Yes	OK	OK	Check input voltage if persistent.
ALTERNATE POWER	Alternate Power Status	The “Alternate Power Status” will be raised if the voltage at the Alternate Input is below 18.0 V or above 32.2 V.	The “Alternate Power Status” will be cleared if the voltage at the Alternate Input is within an inclusive range of 18.0 V to 32.2 V.						Yes	OK	OK	Check input voltage.
POWER LOSS	Power Loss Check	The “Power Loss Status” will be raised if the system enters the Power Failure state.	The “Power Loss Status” will be cleared if the system exits the Power Failure state.						No	FAIL	No	Check input voltage.

L-3 Aviation Recorders Proprietary

L-3 Iridium SATCOM System - Built-in Test and Fault Indicators
TEMPERATURE CHECKS

					Indicator Description							
					LED Off		Fault/Event					
				Fault Light Discrete Output	Operational, No Failure/Fault		Critical Failure					
					Front Panel LEDs				MCDU Indicators			
Fault Name	**BIT Check**	**Raise Fault/Failure Condition**	**Clear Fault/Failure Condition**	ON / OFF	**System**	**ISVM**	**ISDM**	**GPS**	**Operable**	**SDU**	**SCM**	**Comment**
CONFIG FAIL	Temperature Sensor Fault	A “Temperature Sensor Fault” will be raised if one or more of the temperature sensors are considered unreasonable.	The “Temperature Sensor Fault” will be cleared if all of the temperature sensors report a reasonable temperature						Yes	OK	OK	
CONFIG FAULT	System Low Temperature Status	The “System Low Temperature Status” will be raised if the system enters the System Low Temperature state.	The “System Low Temperature Status” will be cleared if the system exits the System Low						Yes	OK	OK	Temperature is below -15 C.
NVM FAIL	ISVM Elevated Temperature Status, or ISVM High Temperature Status, or System High	The “System High Temperature Status” will be raised if the system enters the System High Temperature state.	The “System High Temperature Status” will be cleared if the system exits the System High Temperature state.						Yes	OK	OK	Temperature is above 70 C.

L-3 Iridium SATCOM System - Built-in Test and Fault Indicators
INTERNAL CHECKS

Fault Name	BIT Check	Raise Fault/Failure Condition	Clear Fault/Failure Condition	Fault Light Discrete Output (ON / OFF)	Front Panel LEDs: System	Front Panel LEDs: ISVM	Front Panel LEDs: ISDM	Front Panel LEDs: GPS	MCDU Indicators: Operable	MCDU Indicators: SDU	MCDU Indicators: SCM	Comment
ISVM DPL FAIL	ISVM Voice Communication Failure	The Iridium Satellite Voice Modem (ISVM) failure will be raised if the ISVM driver reports no communication with the ISVM DPL port after three retry attempts.	The "ISVM Voice Communication Failure" will be cleared if the ISVM driver reports communication with the ISVM.		Critical Failure	Fault/Event	Operational, No Failure/Fault	Operational, No Failure/Fault	Yes	FAIL	OK	Voice communications not available. Link should reestablish within a few minutes. If link does not reestablish within 20 minute period, replace SDU.
ISVM AT FAIL	ISVM Data Communication Failure	The "ISVM Data Communication Failure" will be raised if the Iridium All Off Mode is not Active and the ISVM driver reports no communication with the ISVM AT port after three retry attempts.	The "ISVM Data Communication Failure" will be cleared if the ISVM driver reports communication with the ISVM AT port.		Critical Failure	Operational, No Failure/Fault	Fault/Event	Operational, No Failure/Fault	Yes	FAIL	OK	Non-Safety Services Data Communications inoperable. Link should reestablish within a few minutes. If link does not reestablish within 20 minute period, replace SDU.
ISDM FAIL	ISDM Communication Failure	The Iridium Satellite Data Modem (ISDM) failure will be raised if the ISDM driver reports no communication with the ISDM DPL port after three retry attempts.	The "ISDM Voice Communication Failure" will be cleared if the ISDM driver reports communication with the ISDM.		Critical Failure	Operational, No Failure/Fault	Fault/Event	Operational, No Failure/Fault	Yes	FAIL	OK	Safety Services Data Communications inoperable. Link should reestablish within a few minutes. If link does not reestablish within 20 minute period, replace SDU.
SIM CARD FAIL	SIM Communication Failure	The "SIM Communication Failure" will be raised if the system fails to read or write to the SIM card.	The "SIM Communication Failure" will be cleared if the system successfully reads and writes to the SIM card.		Critical Failure	Fault/Event	Operational, No Failure/Fault	Operational, No Failure/Fault	Yes	OK	FAIL	Voice Communications not available. Verify SIM card is installed and SCM is operational.
GPS FAIL	GPS Communication Fail	The "GPS Communication Failure" will be raised if the GPS Receiver reports no communication with the GPS after three retry attempts.	The "GPS Communication Failure" will be cleared if the GPS Receiver reports communication with the GPS.		Critical Failure	Operational, No Failure/Fault	Operational, No Failure/Fault	Fault/Event	Yes	FAIL	OK	GPS not available, Link should reestablish within a few minutes. If link does not reestablish within 20 minute period, replace SDU. If still present verify Iridium/GPS antenna and cable.

Indicator Description: LED Off; Fault/Event; Operational, No Failure/Fault; Critical Failure

L-3 Iridium SATCOM System - Built-in Test and Fault Indicators
EXTERNAL CHECKS

Indicator Description	
LED Off	Fault/Event
Operational, No Failure/Fault	Critical Failure

Fault Name	BIT Check	Raise Fault/Failure Condition	Clear Fault/Failure Condition	Fault Light Discrete Output (ON / OFF)	Front Panel LEDs: System	ISVM	ISDM	GPS	MCDU Indicators: Operable	SDU	SCM	Comment
A717 INACTIVE	ARINC 573/717 Receiver Inactive Fault	The “ARINC 573/717 Receiver fault will be raised if the ARINC 573/717 is configured Active data and the data is not present.	The ARINC 573/717 Receiver Fault will be cleared if ARINC 573/717 data resumes.	OFF	Operational, No Failure/Fault	Operational, No Failure/Fault	Operational, No Failure/Fault	Operational, No Failure/Fault	Yes	OK	OK	Verify ARINC 573/717 data.
A429 RXnn INACT (nn = Port Number)	ARINC 429 Receiver Port Inactive Fault	An “ARINC 429 Receiver Port Inactive Fault” will be raised if an ARINC 429 Receiver Port that is configured as Generic 429 has not	A raised “ARINC 429 Receiver Port Inactive Fault” will be cleared if a recognized label with correct parity is	ON	Fault/Event	Operational, No Failure/Fault	Operational, No Failure/Fault	Operational, No Failure/Fault	Yes	OK	OK	Verify ARINC 429 data on indicated receiver port.
ACARS1 RX INACT	ACARS 1 Receiver Port Inactive Fault	The “ACARS 1 Receiver Port Inactive Fault” will be raised if an ARINC 429 Receiver Port configured as ACARS 1 has not received a recognized label with correct parity for 4 seconds in a	A raised “ACARS 1 Receiver Port Inactive Fault” will be cleared if a recognized label with correct parity is received for 4 seconds in a row over the port for which the	ON	Fault/Event	Operational, No Failure/Fault	Operational, No Failure/Fault	Operational, No Failure/Fault	Yes	OK	OK	Verify ACARS 1 receiver data.
ACARS2 RX INACT	ACARS 2 Receiver Port Inactive Fault	The “ACARS 2 Receiver Port Inactive Fault” will be raised if an ARINC 429 Receiver Port configured as ACARS 2 has not received a recognized label with	A raised “ACARS 2 Receiver Port Inactive Fault” will be cleared if a recognized label with correct parity is received for 4 seconds in a row over	ON	Fault/Event	Operational, No Failure/Fault	Operational, No Failure/Fault	Operational, No Failure/Fault	Yes	OK	OK	Verify ACARS 2 receiver data.
MCDU1 RX INACT	MCDU 1 Receiver Port Inactive Fault	The “MCDU 1 Receiver Port Inactive Fault” will be raised if an ARINC 429 Receiver Port configured as ARINC 739 MCDU 1 has not received a recognized label with correct parity for 4 seconds in a row.	A raised “MCDU 1 Receiver Port Inactive Fault” will be cleared if a recognized label with correct parity is received for 4 seconds in a row over the port for which the “MCDU 1 Receiver Port Inactive Fault” was raised.	ON	Fault/Event	Operational, No Failure/Fault	Operational, No Failure/Fault	Operational, No Failure/Fault	No (MCDU 1)	OK	OK	Display on MCDU 1 inoperable. Check MCDU 1.
MCDU2 RX INACT	MCDU 2 Receiver Port Inactive Fault	The “MCDU 2 Receiver Port Inactive Fault” will be raised if an ARINC 429 Receiver Port configured as ARINC 739 MCDU 1 has not received a recognized label with correct parity for 4 seconds in a row.	A raised “MCDU 2 Receiver Port Inactive Fault” will be cleared if a recognized label with correct parity is received for 4 seconds in a row over the port for which the “MCDU 1 Receiver Port Inactive Fault” was raised.	ON	Fault/Event	Operational, No Failure/Fault	Operational, No Failure/Fault	Operational, No Failure/Fault	No (MCDU 2)	OK	OK	Display on MCDU 2 inoperable. Check MCDU 2.

L-3 Iridium SATCOM System - Built-in Test and Fault Indicators
EXTERNAL CHECKS

					Indicator Description							
					LED Off		Fault/Event					
				Fault Light Discrete Output	Operational, No Failure/Fault		Critical Failure					
					Front Panel LEDs				MCDU Indicators			
Fault Name	BIT Check	Raise Fault/Failure Condition	Clear Fault/Failure Condition	ON / OFF	System	ISVM	ISDM	GPS	Operable	SDU	SCM	Comment
A717 INACTIVE	ARINC 573/717 Receiver Inactive Fault	The “ARINC 573/717 Receiver fault will be raised if the ARINC 573/717 is configured Active data and the data is not present.	The ARINC 573/717 Receiver Fault will be cleared if ARINC 573/717 data resumes.						Yes	OK	OK	Verify ARINC 573/717 data.
MCDU3 RX INACT	MCDU 3 Receiver Port Inactive Fault	The “MCDU 3 Receiver Port Inactive Fault” will be raised if an ARINC 429 Receiver Port configured as ARINC 739 MCDU 1 has not received a recognized label with correct parity for 4 seconds in a row.	A raised “MCDU 3 Receiver Port Inactive Fault” will be cleared if a recognized label with correct parity is received for 4 seconds in a row over the port for which the “MCDU 1 Receiver Port Inactive Fault” was raised.						No (MCDU 3)	OK	OK	Display on MCDU 3 inoperable.
A429 TXn FAIL (n = Port Number)	ARINC 429 Transmitter Port Loopback Failure	An “ARINC 429 Transmitter Port Loopback Failure” will be raised if an active ARINC 429 Transmitter Port is configured as a GP Bus or CFDS and the loopback from the port is not detected.	A raised “ARINC 429 Transmitter Port Loopback Failure” will be cleared if the loopback is detected from the port for which the “ARINC 429 Transmitter Port Loopback Fault” was raised.						Yes	FAIL	OK	Verify ARINC 429 data on indicated transmitter port.
ACARS TX FAIL	ACARS Transmitter Port Loopback Failure	The “ACARS Transmitter Port Loopback Failure” will be raised if an ARINC 429 Transmitter Port is configured as ACARS and the loopback from the port is not detected.	A raised “ACARS Transmitter Port Loopback Failure” will be cleared if the loopback is detected from the port for which the “ACARS Transmitter Port Loopback Failure” was raised.						Yes	FAIL	OK	Verify ACARS transmitter port.
ACARS FAULT	ACARS Loop Test Fault	The “ACARS Loop Test Fault” will be raised if an ACARS Loop Test does not pass on at least one ACARS system.							Yes	OK	OK	Verify ACARS system.

L-3 Iridium SATCOM System - Built-in Test and Fault Indicators
EXTERNAL CHECKS

Fault Name	BIT Check	Raise Fault/Failure Condition	Clear Fault/Failure Condition	Fault Light Discrete Output (ON / OFF)	Front Panel LEDs: System	Front Panel LEDs: ISVM	Front Panel LEDs: ISDM	Front Panel LEDs: GPS	MCDU Indicators: Operable	MCDU Indicators: SDU	MCDU Indicators: SCM	Comment
A717 INACTIVE	ARINC 573/717 Receiver Inactive Fault	The “ARINC 573/717 Receiver fault will be raised if the ARINC 573/717 is configured Active data and the data is not present.	The ARINC 573/717 Receiver Fault will be cleared if ARINC 573/717 data resumes.	OFF	Operational, No Failure/Fault	Operational, No Failure/Fault	Operational, No Failure/Fault	Operational, No Failure/Fault	Yes	OK	OK	Verify ARINC 573/717 data.
MCDU TX FAIL	MCDU Transmitter Port Loopback Failure	The “MCDU Transmitter Port Loopback Failure” will be raised if an ARINC 429 Transmitter Port is configured as ARINC 739 MCDU and the loopback from the port is not detected.	A raised “MCDU Transmitter Port Loopback Failure” will be cleared if the loopback is detected from the port for which the “MCDU Transmitter Port Loopback Failure” was raised.	ON	Critical Failure	Operational, No Failure/Fault	Operational, No Failure/Fault	Operational, No Failure/Fault	No	FAIL	OK	Verify MCDU system.
SERIALn FAULT (n = Port Number)	RS-232/422 Receive Fault	A “RS-232/422 Receive Fault” will be raised for any active RS-232/422 Serial Port for which a received data error is reported.	A raised “RS-232/422 Receiver Fault” will be cleared if the data is received without error over the port for which the fault was raised.	ON	Fault/Event	Operational, No Failure/Fault	Operational, No Failure/Fault	Operational, No Failure/Fault	Yes	OK	OK	Verify received serial data on indicated port.
SERIALn FAIL (n = Port Number)	RS-232/422 Transmission Loopback Failure	The “RS-232/422 Transmission Loopback Failure” will be raised for any Active RS-232 Serial Port whose loopback is not detected after three loopback attempts.	The “RS-232/422 Transmission Loopback Failure” cannot be cleared once raised.	ON	Critical Failure	Operational, No Failure/Fault	Operational, No Failure/Fault	Operational, No Failure/Fault	Yes	FAIL	OK	Verify serial data on indicated port.
DOUTn FAIL (n = Port Number)	Discrete Output Failure	A “Discrete Output Failure” will be raised for any Discrete Output Port that is Active and does not output the expected voltage.	The “Discrete Output Failure” will be cleared if the expected voltage is output from the port for which the fault was raised.	ON	Critical Failure	Operational, No Failure/Fault	Operational, No Failure/Fault	Operational, No Failure/Fault	Yes	FAIL	OK	Verify discrete output on indicated port.
ETHERNETn FAULT (n = Port Number)	Ethernet Link Fault	The “Ethernet Link Fault” will be raised if Ethernet is Monitored and there is no link.	The “Ethernet Link Fault” will be cleared if Ethernet is Monitored and there is a link.	OFF	Operational, No Failure/Fault	Operational, No Failure/Fault	Operational, No Failure/Fault	Operational, No Failure/Fault	Yes	OK	OK	Verify indicated Ethernet port. Access to MUI may be impacted, may need to access MUI through another Ethernet port.

Indicator Description: LED Off; Fault/Event; Operational, No Failure/Fault; Critical Failure

L-3 Iridium SATCOM System - Built-in Test and Fault Indicators
EXTERNAL CHECKS

					Indicator Description							
					LED Off		Fault/Event					
				Fault Light Discrete Output	Operational, No Failure/Fault		Critical Failure					
				ON / OFF	Front Panel LEDs				MCDU Indicators			
Fault Name	**BIT Check**	**Raise Fault/Failure Condition**	**Clear Fault/Failure Condition**		**System**	**ISVM**	**ISDM**	**GPS**	**Operable**	**SDU**	**SCM**	**Comment**
A717 INACTIVE	ARINC 573/717 Receiver Inactive Fault	The “ARINC 573/717 Receiver fault will be raised if the ARINC 573/717 is configured Active data and the data is not present.	The ARINC 573/717 Receiver Fault will be cleared if ARINC 573/717 data resumes.						Yes	OK	OK	Verify ARINC 573/717 data.
NO GPS LINK	GPS Link Status	The “GPS Link Status” will be raised if the internal GPS is configured as Active and the GPS Receiver reports no navigation solution for 5 seconds in a row.	The “GPS Link Status” will be cleared if the GPS Receiver reports a navigation solution for 5 seconds in a row.						Yes	OK	OK	GPS not available, Link should reestablish within a few minutes. If link does not reestablish within 20 minute period, replace SDU. If still present verify Iridium/GPS antenna and cable.
NO ISVM LINK	ISVM Link Status	The “ISVM Link Status” will be raised if the ISVM driver reports no link.	The “ISVM Link Status” will be cleared if the ISVM driver reports a link for 5 seconds in a row.						Yes	OK	OK	Voice communications not available. Link should reestablish within a few minutes.
NO ISDM LINK	ISDM Link Status	The “ISDM Link Status” will be raised if the ISDM driver reports no link.	The “ISDM Link Status” will be cleared if the ISDM driver reports a link for 5 seconds in a row.						Yes	OK	OK	Data communications not available. Link should reestablish within a few minutes.
NO DTP SOURCE	Date, Time, Position Source Status	The “DTP Source Status” will be raised if DTP 1 interface, DTP 2 interface, DTP 3 interface, and internal GPS are all not providing valid data.	The “DTP Source Status” will be cleared if at least one of DTP 1 interface, DTP 2 interface, DTP 3 interface, or internal GPS is providing valid data.						Yes	OK	OK	Verify DTP source.

Aviation Recorders

The Future of Connectivity

Iridium SIM Card Registration

The Iridium network is based on the international Global System for Mobile communications (GSM) standard and architecture. With any GSM cellular device, all Iridium transceivers capable of voice require a Subscriber Identity Module (SIM) associated with the mobile device. Though the SIM can be used for many functions, such as restricting call access or to store information, its primary function is to assign the telephone number to the L-3 Satellite Data Unit (SDU) transceiver. An exception is the Iridium Short Burst Data (SBD) modem, which operates solely from an IMEI number assigned to each modem.

Often customers or installers are not familiar with the need to activate the SIM and IMEI for service over the Iridium network prior to testing or use of the system. You may select any valid Iridium Service provider. Our recommendation is to contact our partner, FLYHT Aerospace Solutions Ltd., complete the following activation form, and send to FLYHT for processing.

There are two types of voice service plans to choose from:

- **Air Traffic Service (ATS)**
  The operator will be able to prioritize calls to and from the cockpit and pre-empt a lower priority call with a higher priority incoming call. The calls from ground-to-air have additional security procedures; the user will be required to have a User ID, PIN, plane ID, and set the call priority.
- **Non-ATS**
  This service does not have call prioritization and the ground-to-air calls only require the phone number of the SIM card to place a call.

You may need the following information when activating a SIM card:

- Tail Number
- Avionics MFR – L-3/FLYHT
- Avionics Model - AFIRS 228S Satellite Data Unit
- IMEI Voice Modem Number
- IMEI Data Modem Number
- Voice Modem Model 9523
- Data Modem Model 9602

Congratulations on purchasing the FLYHT AFIRS™ 228S system.

In order to complete the activation of the voice and data services we require some additional information.

Please review the following voice and data service options and email the completed form to us at 228S Voice/Data Services@FLYHT.com. A FLYHT Service and Support Manager will contact you to complete the activation process and to provide you with the assigned satcom phone number.

1. Aircraft Information:

Model: _____

Serial Number: _____

Registration: _____

2. AFIRS 228 Information:

SDU Serial Number: _____

SCM Serial Number _____

3. Please select one of the following satcom voice service plan options:

	AFIRS Global Voice/Data Plan – NON ATS	Rate	Billing Intervals
☐	Air to Ground	$1.45/min USD	20 seconds
	Ground to Air	$1.45/min USD	20 seconds
	Circuit Switch Data for EFB	$1.45/min USD	20 seconds
Note 1: Calls to other SATCOM service providers will be charged at a rate of $8.50/min Note 2: Minimum monthly fee of $50 will apply to all accounts			

	AFIRS Global Voice/Data Plan – ATS	Rate	Billing Intervals
☐	Air to Ground	$1.45/min USD	20 seconds
	Ground to Air	$1.75/min USD	20 seconds
	Circuit Switch Data for EFB	$1.45/min USD	20 seconds
Note: Calls to other SATCOM service providers will be charged at a rate of $8.50/min Note 2: Minimum monthly fee of $50 will apply to all accounts			

4. **Please indicate your ACARS satcom data service provider:**

☐ ARINC

☐ SITA

Please note you will require a separate agreement with your selected ACARS satcom data service provider.

5. **Contact information:**

	Primary contact*	Billing Contact (if different)
Company		
Name		
Address:		
email :		
Phone:		

*The satcom voice phone number will be provided to this contact upon activation.

Terms and Conditions

TERMS OF PAYMENT

Payment net thirty (30) days from date of invoice or as otherwise specified by Seller. Buyer agrees to pay the entire net amount of each invoice from Seller pursuant to the terms of each such invoice without offset or deduction. Orders are subject to credit approval by Seller, which may in its sole discretion at any time change the terms of buyer's credit, require payment in cash, bank wire transfer or by official check and/or require payment of any or all amounts due or to become due for Buyer's order before shipment of any or all of the products. If seller believes in good faith that Buyer's ability to make payments may be impaired or if Buyer shall fail to pay any invoice when due, Seller may suspend the delivery of any order or any remaining balance thereof until such payment is made or cancel any order or any remaining balance, thereof, and buyer shall remain liable to pay for any products already shipped and all Non-Standard Products ordered by Buyer. Buyer agrees to submit such financial information from time to time as may be reasonably requested by Seller for the establishment and/or continuation of credit terms. Checks are accepted subject to collection and the date of the collection shall be deemed the date of payment. Any check received from Buyer may be applied by Seller against any obligation owing from Buyer to Seller, regardless of any statement appearing in or referring to Buyer shall pay interest on any invoice not paid when due from the due date to the date of payment at the rate of one and one-half (1-1/2%) percent per month or such lower rate as may be maximum allowable by law. If Buyer fails to make payment when due Seller may pursue any legal or equitable remedies, in which event Seller shall be entitled to reimbursement for costs of collection and reasonable attorneys fees.

PRIVACY POLICY

FLYHT Aerospace Solutions Ltd. (FLYHT) uses the information collected to fulfill your requests for services and to facilitate billing. FLYHT will send personally identifiable information about you and/or your company to other companies or people when: we need to share your information to provide the service you have requested, we need to send the information to companies who work on behalf of FLYHT to provide service to you (unless we tell you differently these companies do not have any right to use the personally identifiable information we provide them beyond what is necessary to assist us). Personally identifiable consumer information is shared with third parties (such as banks and credit card processors) to the extent necessary for FLYHT to collect payment for the services provided.

CUSTOMER AGREEMENT

As an individual or authorized representative of the company, I hereby certify that the information provided on this form is true and correct. I authorize FLYHT Aerospace Solutions Ltd. (FLYHT) to investigate financial references and all other relevant material. FLYHT has the right to deny service to any account that is past due and also reserves the right to deny service based upon information supplied. I understand that our company is responsible for all charges and services up till the date our account is properly cancelled through FLYHT and the Iridium network. I agree that FLYHT cannot be held liable for any claims due to unavailability, delay, or

interruption in satellite services. Such claims shall also extend to damage, expense, and loss of life. I agree to the Terms of Payment and the Privacy Policy.

I have read and agree to the standard terms and conditions above. Signed this _____day of _____, 20____:

Signature: _____

Print Name _____

Title _____

Company _____

Address: _____

_____

_____

_____

email : _____

Phone: _____

Aviation Recorders

Installation Manual
Airbus Iridium SATCOM System

SDU L-3 part number 228E5733-00
SCM L-3 part number 418E5733-00

Publication Number: 165E5733-00

Issue: Rev. 02
21 January 2014

L-3 Aviation Recorders Proprietary

100 Cattlemen Road
Sarasota, FL 34232

Aviation Recorders

EXPORT CONTROL STATEMENT IRIDIUM SATCOM TECHNOLOGY / DATA:

"This Iridium SATCOM System Technical Data is being exported from the United States in accordance with the Export Administration Regulations (ECCN #7A994), No License Required (NLR). Diversion contrary to U.S. law is prohibited. In accordance with U.S. Law (Title 15CFR Part 746 and Supplement No. 1 to Part 774; and Title 31CFR) resale/re-export or transfer to certain designated countries is prohibited without the prior written consent of the U.S. Department of Commerce."

HTSUS/Schedule B: 85439.09.000

This manual contains date sensitive information. To verify the latest revision level of this manual, visit our document down-load site at http://www.L3ar.net.

©Copyright 2013 by L-3 Communications.

All rights reserved. No part of this manual may be reproduced or utilized in any form or by any means, electronic or mechanical, including photocopying, recording, or by information storage and retrieval system, without permission in writing.

Inquiries should be addressed to:

L-3 Communications,
Aviation Recorders Publications
Vendor Code: 06141 P. O. Box 3041
Sarasota, Florida 34230
Phone: (941) 371–0811;
FAX: (941) 377–5591

Aviation Recorders

Record of Revisions

Rev.	Issue Date	Description	Pages	By
00	01 November 2013	Initial issue.	All	CM
01	15 December 2013	Corrected SDU & SCM Top-Level Part Numbers.	All	CM/SC
02	21 January 2014	Corrected SDU & SCM Top-Level Part Numbers.	All	CP

Table of Contents

1. Introduction 9
1.1 Applicability 9
1.2 Model Designation 9
1.2.1 Airbus Iridium SATCOM System 9
1.3 Part Numbers 9
1.4 Reference Documents 9
1.5 Definitions of Acronyms and Terms 12
2. Description and Operation 16
2.1 System Overview 16
2.2 System Architecture 16
2.3 External System Interfaces 17
3. Equipment Specifications 20
3.1 Satellite Data Unit (SDU) 20
3.1.1 General 21
3.1.2 Mechanical Specifications 21
3.1.3 Environmental Specifications – Airbus Iridium SATCOM System 22
3.2 SDU Configuration Module (SCM) 22
3.2.1 General 22
3.2.2 Mechanical Specifications 23
3.2.3 Environmental Specifications 25
3.3 Airbus Iridium SATCOM System Satellite Antenna 25
3.4 Antenna Coaxial Cable 26
3.5 Interface Specifications 26
SDU Rear Connector (J1) 27
3.5.1 Power Input 29
3.5.2 Chassis Ground 29
3.5.3 ARINC 429 Digital Serial Bus Input 30
3.5.4 ARINC 429 Digital Serial Bus Output 30
3.5.5 Ethernet 30
3.5.6 Discrete Inputs 30
3.5.6.1 Configurable Inputs 30
3.5.7 Discrete Outputs 31

3.5.7.1 Configurable Outputs 31
3.5.8 Two-Wire Phone 31
3.5.9 Microphone Input 31
3.5.10 Iridium / GPS Antenna 32
3.6 SDU Maintenance Connector (J2) 32
3.7 SDU Configuration Module (SCM) 32
3.8 ARINC 429 Receiver Protocols 32
3.9 ARINC 429 Receiver Activity Status 34
3.10 ARINC 429 Transmitter Protocols 34
3.10.1 From SDU to ATSU / FWC 34
3.10.2 From SDU to MCDU 35
3.10.3 From SDU to Airbus CFDS 35
4. Installation Considerations 36
4.1 Satellite Data Unit (SDU) 36
4.2 SDU Configuration Module (SCM) 37
4.3 Iridium Antenna System 37
4.3.1 Antenna 37
4.3.2 Antenna Mounting 39
4.3.3 Coaxial Cable 39
5. SATCOM Installation Materials 41
5.1 Required Materials 41
6. System Interface Wiring 42
6.1 General 42
6.2 Primary Power, Antenna, and SCM 42
6.3 ARINC 429 Interfaces 42
6.3.1 Receiver Protocols 43
6.3.2 Transmitter Protocols 43
6.4 MCDU 44
6.5 ACARS ATSU 45
6.6 CFDIU Interface 46
6.7 Date, Time and Position 46
6.8 RS-232/422 Databus 46
6.9 Ethernet 47
6.10 Discrete Inputs 48
6.10.1 Landing Gear Control Interface Unit (LGCIU) Input 48
6.10.2 Function Assignment 49

6.11 Discrete Outputs 50
6.12 SATCOM 50
6.12.1 Audio Integrating System 50
7. SATCOM System Configuration 52
7.1 Accessing the Maintenance User Interface (MUI) 53
7.1.1 Home Page Tab Descriptions 54
7.1.2 Faults Page 55
7.1.3 Part Numbers Page 56
7.2 Entering Maintenance Mode 57
7.2.1 Maintenance Mode Menu Descriptions 60
7.3 Configuring the Airbus Iridium SATCOM System 65
7.3.1 Address Book 65
7.3.2 Owner Requirements Table (ORT) Parameters 66
7.3.3 Installation Configuration Table (ICT) 68
7.3.4 User Access Table (UAT) Parameters 68
7.4 Upgrading Airubs Iridium SATCOM System Software 70
7.4.1 Upgrade Materials 70
7.4.2 Upgrade Procedure 70
7.5 Exiting Maintenance Mode 73
8. Maintenance and Checkout 75
8.1 Post-Installation Checkout 75
8.1.1 Before Power-On Tests 75
8.1.2 Aircraft Systems Interface Tests 76
8.1.3 Operational System Tests 77
8.1.4 EMI Tests 78
8.2 Instructions for Continued Airworthiness 78

List of Figures

Figure 2-1 – Airbus Iridium SATCOM System Operational Concept 16
Figure 2-2 – Airbus Iridium SATCOM System Block Diagram 17
Figure 2-3 – Airbus Iridium SATCOM System External Interfaces 18
Figure 3-1 – Airbus Iridium SATCOM System Satellite Data Unit (SDU) 20
Figure 3-2 – SDU Outline Drawing 21
Figure 3-3 – Airbus Iridium SATCOM System SDU Configuration Module (SCM) 22

Figure 3-4 – SCM Outline Drawing 23
Figure 3-5 – SCM Oblique View 24
Figure 3-6 – SCM Connector View Showing Location of Pin 1 25
Figure 3-7 – Airbus Iridium SATCOM System Antenna 25
Figure 3-8 – Iridium Antenna Coaxial Cable and Connectors 26
Figure 3-9 – SDU Connector Map 29
Figure 4-1 – 2MCU Mounting Tray 36
Figure 4-2 – Iridium Antenna, Outline and Dimensions 38
Figure 4-3 – Iridium Antenna, Gasket 39
Figure 4-4 – Iridium Antenna, Coaxial Cable 40
Figure 6-1 – Primary Power, Antenna, and SCM Interface 42
Figure 6-2 – MCDU Interface 44
Figure 6-3 – ACARS ATSU Interface 45
Figure 6-4 – CFDIU Interface 46
Figure 6-5 – Serial Port Interface 47
Figure 6-6 – Ethernet Interface 48
Figure 6-7 – Discrete Input Interfaces 50
Figure 6-8 – Latched ACP Audio Interface 51
Figure 7-1 – Maintenance Port Location 52
Figure 7-2 – Home Page – General Tab 54
Figure 7-3 – Faults Page (Fault Log Tab) 55
Figure 7-4 – Faults Page (Fault History Tab) 55
Figure 7-5 – Part Numbers Page (Software Tab) 56
Figure 7-6 – Part Numbers Page (Hardware Tab) 56
Figure 7-7 – Entering Maintenance Mode Message 57
Figure 7-8 – Maintenance Mode Initial Display Screen 58
Figure 7-9 – Maintenance Mode Exit Screen 59
Figure 7-10 – System Restart Screen 59
Figure 7-11 – Upgrades Screen 60
Figure 7-12 – Address Book 66
Figure 7-13 – ORT Screen 67
Figure 7-14 – UAT Page 69
Figure 7-15 – Software Upgrade Progress 71
Figure 7-16 – Software Loading Progress Screens 71
Figure 7-17 – Exit Maintenance Mode Message 72
Figure 7-18 – Exit Maintenance Mode Progress Bar 72
Figure 7-19 – Exiting Prompt Message 73
Figure 7-20 – Restart Screen 74
Figure 7-21 – Software Part Numbers Screen 74

List of Tables

Table 1-1 – Part Numbers 9
Table 1-2 – References 9
Table 1-3 – Acronyms and Terms 12

Table 3-1 – J1A Top Plug (TP) Insert 27
Table 3-2 – J1B Middle Plug (MP) Insert 28
Table 3-3 – J1C Bottom Plug (BP) Insert 29
Table 3-4 – ARINC 429 Receiver Protocols – ATSU/FWC 32
Table 3-5 – ARINC 429 Receiver Protocols – CFDS 33
Table 3-6 – ARINC 429 Receiver Protocols – MCDU 33
Table 3-7 – ARINC 429 Receiver Port Monitoring 34
Table 3-8 – ARINC 429 Transmitter Protocols SDU – ATSU/FWC 34
Table 3-9 – ARINC 429 Transmitter Protocols SDU – MCDU 35
Table 3-10 – ARINC 429 Transmitter Protocols SDU – FDS 35

Table 6-1 – Serial Port Pin Assignments 46

Table 7-1 – Read Privileges by Role 62
Table 7-2 – Download Privileges by Role 63
Table 7-3 – Modify Privileges by Role 64

Appendices

Appendix A – Wiring Diagram 79
Appendix B – ORT Worksheet 83
Appendix C – Environmental Qualification Forms 85

1. INTRODUCTION

This section provides a general introduction to the Airbus Iridium SATCOM System and its applicable standards and references.

1.1 Applicability

This Installation Manual provides the information necessary to plan the Airbus Iridium SATCOM System installation and integration in the aircraft. It defines the mechanical and electrical interfaces for each Line Replaceable Unit (LRU) and provides the procedures required to properly configure, test, and maintain the Airbus Iridium SATCOM System. This manual is applicable to the following software version(s):

Software Part Number: 840E5733-06

1.2 Model Designation

This manual covers model designation Airbus Iridium SATCOM System.

1.2.1 Airbus Iridium SATCOM System

The Airbus Iridium SATCOM System will be certified to TSO C-159a for voice and data safety-services. It has a dual-channel Iridium link, one dedicated for safety-services data and the other prioritized for safety-services voice.

1.3 Part Numbers

The following part numbers are defined for the LRUs of the Airbus Iridium SATCOM System.

Table 1-1 – Part Numbers

Part Number	Description
228E5733-00	Airbus Iridium SATCOM System Satellite Data Unit (SDU)
418E5733-00	Airbus Iridium SATCOM System SDU Configuration Module (SCM)

1.4 Reference Documents

Table 1-2 – References

Ref.	Document Number	Description
1.	ANSI/TIA/EIA-232-F-1997	Interface Between Data Terminal Equipment and Data Circuit-Terminating Equipment Employing Serial Binary Data Interchange
2.	ARINC 429-19	Mark 33 Digital Information Transfer System (DITS)

Ref.	Document Number	Description
3.	ARINC 573-7	Mark 2 Aircraft Integrated Data System (AIDS Mark 2)
4.	ARINC 600-16	Air Transport Avionics Equipment Interfaces
5.	ARINC 619-3	ACARS Protocols For Avionic End Systems
6.	ARINC 664-2	Aircraft Data Networks
7.	ARINC 702-6	Flight Management Computer System
8.	ARINC 702A-3	Advanced Flight Management Computer System
9.	ARINC 717-14	Flight Data Acquisition and Recording System
10.	ARINC 718-4	Mark 3 Air Traffic Control Transponder (ATCRBS/MODE S)
11.	ARINC 718A-2	Mark 4 Air Traffic Control Transponder (ATCRBS/MODE S)
12.	ARINC 739A-1	Multi-Purpose Control And Display Unit
13.	ARINC 741-13	Aviation Satellite Communication System
14.	ARINC 758-2	Communications Management Unit (CMU) Mark 2
15.	ARINC 761-4	Second Generation Aviation Satellite Communication System, Aircraft Installation Provisions
16.	FAA TSO C-159a	Technical Standard Order, Avionics Supporting Next Generation Satellite Systems (NGSS)
17.	GAMA Publication No. 11, Ver. 5.1	ARINC 429, General Aviation Subset
18.	IEEE 802.3-2008	IEEE Standard for Information Technology-Specific Requirements - Part 3: Carrier Sense Multiple Access with Collision Detection (CMSA/CD) Access Method and Physical Layer Specifications
19.	RTCA/DO-160G	Environmental Conditions and Test Procedures for Airborne Equipment
20.	RTCA/DO-214	Audio Systems Characteristics and Minimum Operational Performance Standards for Aircraft Audio Systems and Equipment
21.	RTCA/DO-262A	Minimum Operational Performance Standards for Avionics Supporting Next Generation Satellite Systems (NGSS)
22.	TIA/EIA-422-B	Electrical Characteristics of Balanced Voltage Digital Interface Circuits

Ref.	Document Number	Description
23.	ABD0100 Issue I	List of Affective ABD0100 Modules
24.	ABD0100.0.0D	General
25.	ABD0100.1.1E	General Technical Requirements Applicable to all Technical Domains
26.	ABD0100.1.2G	Environmental Conditions and Tests Requirements Associated to Qualification
27.	ABD0100.1.3E	Safety – Reliability - Requirements
28.	ABD0100.1.4F	Maintainability Requirements
29.	ABD0100.1.5F	Off – Aircraft Test and Testability Requirements
30.	ABD0100.1.6D	Material Requirements
31.	ABD0100.1.7E	Mechanical Requirements
32.	ABD0100.1.8E	Electrical and Installation Requirements
33.	ABD0100.1.9H	Electronic Equipment Design and Parts Requirements
34.	ABD0100.1.10G	Software Requirements Related to Product
35.	ABD0100.1.11C	Optical and Installation Requirements
36.	ABD0100.1.12B	Conventional Instruments Requirements
37.	ABD0100.1.13A	Cabin Requirements
38.	ABD0100.1.14B	Obsolescence Management
39.	ABD0100.1.15A	Supportability Engineering
40.	ABD0100.1.16A	Equipment Functional Robustness
41.	ABD0100.2.1C	Purchaser-Supplier Relations Requirements
42.	ABD0100.2.2F	Supplier Organization Requirements
43.	ABD0100.2.3E	Equipment General Design Assurance Process
44.	ABD0100.2.4G	Software Design Assurance Process
45.	ABD0100.2.5D	Hardware Design Assurance Process

Ref.	Document Number	Description
46.	ABD0100.2.6B	Sub-Contracted Item Design Assurance
47.	ABD0100.2.7G	Design Validation/Verification Process and Reviews
48.	ABD0100.2.8F	Formal Qualification and Purchaser Acceptance Process
49.	ABD0100.2.9G	Configuration Management Process
50.	ABD0100.2.10A	Design Quality Assurance
51.	ABD0100.2.11C	Electronic Hardware Design Assurance Process
52.	ABD0100.3.0H	Documentation Requirements
53.	ABD0012G	Supplies – Tool and Test Equipment
54.	ABD0031F	Fire/Smoke/Toxicity
55.	ABD0024E	Aircraft MFR – Tools and test equipment
56.	ABD0046D	Units of Measurement
57.	AP1013C	GRESS: General Requirements for Equipment and System Supplier

1.5 Definitions of Acronyms and Terms

Table 1-3 – Acronyms and Terms

Acronym	Definition
ACARS	Aircraft Communications Addressing and Reporting System
ACP	Audio Control Panel
ADB	Address Book
AFIRS	Automated Flight Information Reporting System
ANSI	American National Standards Institute
APU	Auxiliary Power Unit
ATE	Automatic Test Equipment
ATS	Air Traffic Service
ATSU	Air Traffic Service Unit

Acronym	Definition
ARINC	Aeronautical Radio Incorporated
AWG	American Wire Gauge
BCD	Binary Coded Decimal
BITE	Built-In Test Equipment
BOP	Bit Oriented Protocol
BP	Bottom Plug
BSP	Board Support Package
CF	Compact Flash
CFDS	Centralized Fault Display System (Airbus)
CNSSA	Core Non-Safety Services Application
CTS	Clear To Send
DITS	Digital Information Transfer System
DTP	Date Time Position
EFB	Electronic Flight Bag
EIA	Electronics Industry Association
ELA	Embedded Logic Application
FAA	Federal Aviation Administration
F/W	Firmware
FWC	Flight Warning Computer
GAMA	General Aviation Manufacturers Association
GFI	General Format Identifier
GPS	Global Positioning System
GSE	Ground Service Equipment
HBP	Harvard Bi-Phase
HYB	Hybrid
ICA	Instructions for Continued Airworthiness
ICAO	International Civil Aviation Organization

Acronym	Definition
ICD	Interface Control Document
ICE	Iridium Certified Equipment
ICT	Installation Configuration Table
IEEE	Institute of Electrical and Electronics Engineers
IMEI	International Mobile Equipment Identifier
ISO	International Organization for Standardization
LGCIU	Landing Gear Control Interface Unit
LED	Light Emitting Diode
LRU	Line Replaceable Unit
LSK	Line Select Key
MCDU	Multi-Purpose Control and Display Unit
MOPS	Minimum Operational Performance Specifications
MP	Middle Plug
MUI	Maintenance User Interface
N/C	Normally Closed
NGSS	Next Generation Satellite Systems
N/O	Normally Open
ORT	Owner Requirements Table
PBX	Public Branch Exchange
PC	Personal Computer
P/N	Part Number
PSTN	Public Switched Telephone Network
PTT	Push To Talk
RMS	Root-Mean-Square
RTS	Request To Send
RTCA	Radio Technical Commission for Aeronautics
RX	Receive

Acronym	Definition
SAL	System Address Label
SATCOM	Satellite Communications
SCM	SDU Configuration Module
SDI	Source/Destination Identifier
SDU	Satellite Data Unit
SIM	Subscriber Identity Module
SSA	Safety Service Application
SSM	Signed Status Matrix
SW	Software
TIA	Telecommunications Industry Association
TNC	Threaded Neill–Concelman
TP	Top Plug
TX	Transmit
TSO	Technical Standard Order
UAT	User Access Table
UTC	Coordinated Universal Time
VAC	Volts Alternating Current
VDC	Volts Direct Current
WPS	Words Per Second

2. DESCRIPTION AND OPERATION

This section describes the system operation and architecture.

2.1 System Overview

The Airbus Iridium SATCOM System provides multiple voice and data communications functions in the aircraft. The Automated Flight Information Reporting System (AFIRS) provides a satellite voice and data communications (SATCOM) link with the Public Switched Telephone Network (PSTN) via the Iridium® satellite network. The system uses a standard ARINC 741/761 SATCOM interface to the flight crew's Audio Integrating System and ARINC 739A Multi-Purpose Control and Display Units (MCDUs) in the cockpit, as well as providing 3-extension Public Branch Exchange (PBX) capability for up to 2 handsets in the cabin.

Figure 2-1 – Airbus Iridium SATCOM System Operational Concept

The Airbus Iridium SATCOM System provides a dedicated safety-services data channel with the capability to send and receive standard ACARS messages between the aircraft's Air Traffic Service Unit (ATSU) and a safety-services certified terrestrial service provider.

2.2 System Architecture

The Airbus Iridium SATCOM System consists of modular avionics components that can be tailored to meet customer needs. The core system components are the Satellite Data Unit (SDU), the SDU Configuration Module (SCM), and the Iridium Antenna (see Figure 2-2). Optional components include Cabin Handset(s) (Wired or Cordless).

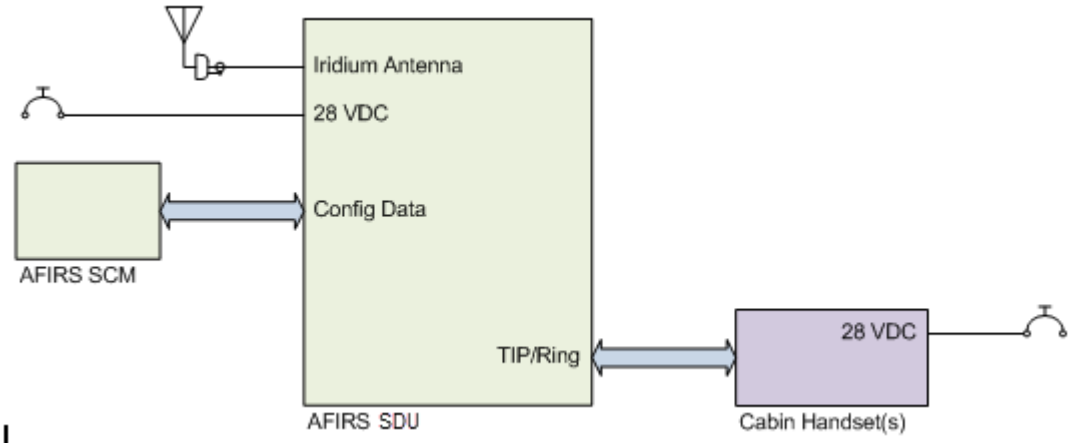

Figure 2-2 – Airbus Iridium SATCOM System Block Diagram

2.3 External System Interfaces

The Airbus Iridium SATCOM System has a number of external interfaces, which are listed below and described in detail in this section.

- Audio System Interface (1)
- ARINC 429 Transmitters (6) and Receivers (16)
- RS-232/422 Serial Ports (4)
- Ethernet Ports (4)
- Discrete Outputs (8) and Inputs (16)
- Iridium Antenna (1)
- User Media Interfaces – SIM (1), CF (1)
- Maintenance Interfaces – Ethernet (1)
- Voice Modem – Iridium 9523
- Data Modem – Iridium 9602

Figure 2-3 illustrates the interfaces that the Airbus Iridium SATCOM System provides to external aircraft systems or to the user.

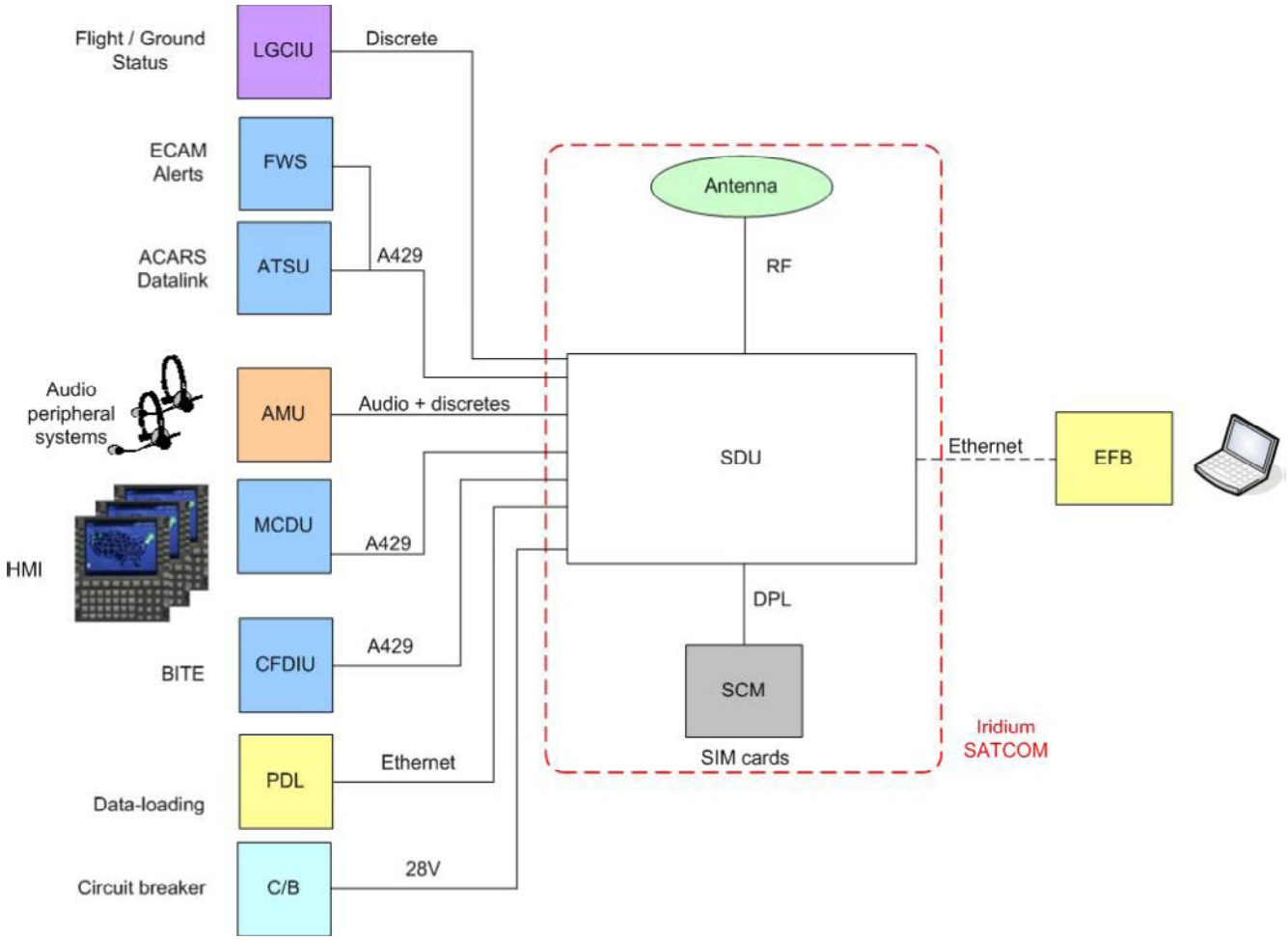

Figure 2-3 – Airbus Iridium SATCOM System External Interfaces

- **Audio System Interface (1)**

This interface consists of a Microphone Input to the SDU and an Interphone Output from the SDU to connect to a standard (DO-214) Audio Integrating System (e.g. Audio Panel) in the aircraft. Software selectable discrete inputs and outputs can be configured to support this interface (e.g. Mic On, Chime, Chime Reset, End Call functions).

- **ARINC 429 Transmitters (6) and Receivers (16)**

These interfaces can be software-configured to connect to various aircraft systems to support both the display and control functions of the Airbus Iridium SATCOM System. Typical interfaced systems include MCDUs, ACARS ATSUs, Airbus Centralized Fault Display Systems (CFDS), etc.

- **RS-232/422 Serial Ports (4)**

These interfaces can be software-configured to connect to different aircraft systems. Typical interfaced systems include EFB, Global Positioning System (GPS), etc.

- **Ethernet Ports (4)**

These interfaces can be used to connect to several different systems. Typical interfaced systems include EFB, CFDS, etc. One of these ports can also be used to provide a remote maintenance port interface (e.g. in the flight compartment).

- **Discrete Outputs (8) and Inputs (16)**

Discrete inputs and outputs can be used to provide or supplement various flight crew control and display interactions, particularly for voice functions. Discrete inputs can also be used to determine the states of various aircraft systems when this information is not available on a databus (e.g. Weight-on-Wheels, Doors Closed, etc.).

- **Iridium Antenna (1)**

An antenna mounted on the top of the fuselage is used to communicate with both the Iridium satellite network and the GPS satellite network.

- **User Media Interfaces – SIM (1), CF (1)**

There are two types of media available for the user to insert or remove from the Airbus Iridium SATCOM System. The SCM contains a user accessible Subscriber Identity Module (SIM) card slot for storage of the Iridium communications management information. The SDU contains a front panel accessible Compact Flash (CF).

- **Maintenance Interfaces – Ethernet (1)**

An RJ45 jack on the front panel provides Maintenance Port access using an Ethernet connection.

3. EQUIPMENT SPECIFICATIONS

This section describes the mechanical and environmental specifications of the components of the Airbus Iridium SATCOM System.

3.1 Satellite Data Unit (SDU)

This section describes the mechanical and environmental specifications of the components of the Satellite Data Unit (SDU) – see Figure 3-1.

Figure 3-1 – Airbus Iridium SATCOM System Satellite Data Unit (SDU).

3.1.1 General

The SDU is housed in an ARINC 600 2MCU enclosure, which is designed to be mounted in a standard ARINC 600 mounting tray. See Figure 3-2 for an outline of this component.

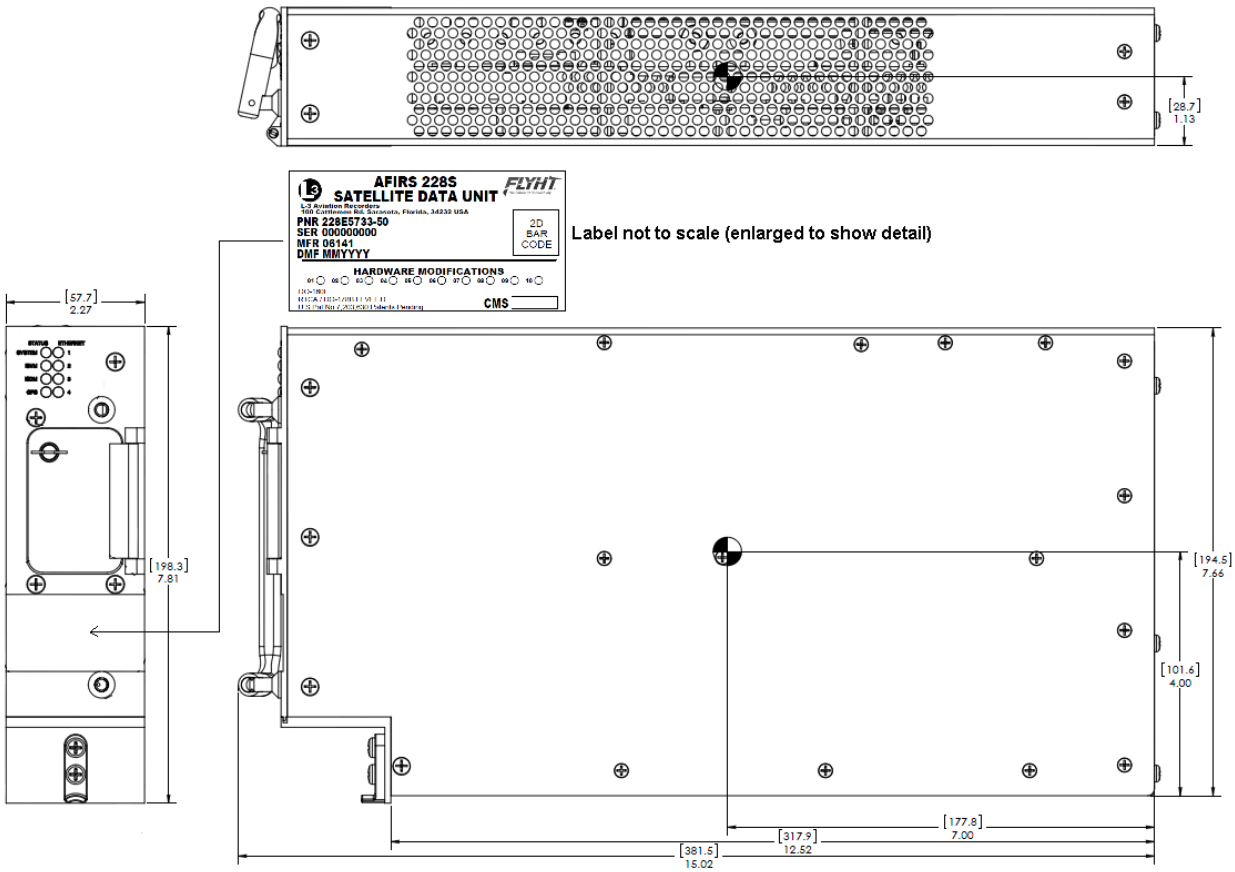

Figure 3-2 – SDU Outline Drawing (dimensions in [millimeters] and inches)

3.1.2 Mechanical Specifications

Dimensions:	7.81” x 2.27” x 15.02” (198.3mm x 57.7mm x 381.5mm) (See Figure 3-2)
Weight:	7.7 lbs. (3.49 kg) Max.
Material/Finish:	Aluminum Alloy with Black Polyurethane Finish

Mounting:	ARINC 600 2MCU Mounting Tray
Rear Mating Connector:	Size 2 ARINC 600 Receptacle Radiall P/N: NSXN2P201S0004
Maintenance Connector:	RJ45 (8P8C) Modular Connector Jack
Flash Card:	CompactFlash® (Type I or Type II)

3.1.3 Environmental Specifications – Airbus Iridium SATCOM System

Refer to Appendix C – Environmental Qualification Forms for environmental testing conditions, categories and descriptions of the conducted tests of the SDU.

Note:
DO-160G Categories for the Airbus Iridium SATCOM System are as specified by the design. Qualification tests on the Airbus Iridium SATCOM System SDU have not been completed to date.

3.2 SDU Configuration Module (SCM)

This section describes the mechanical and environmental specifications of the components of the SDU Configuration Module (SCM) – see Figure 3-3.

3.2.1 General

The SCM is housed in a small enclosure, which is designed to be mounted within 24” of the SDU rear connector.

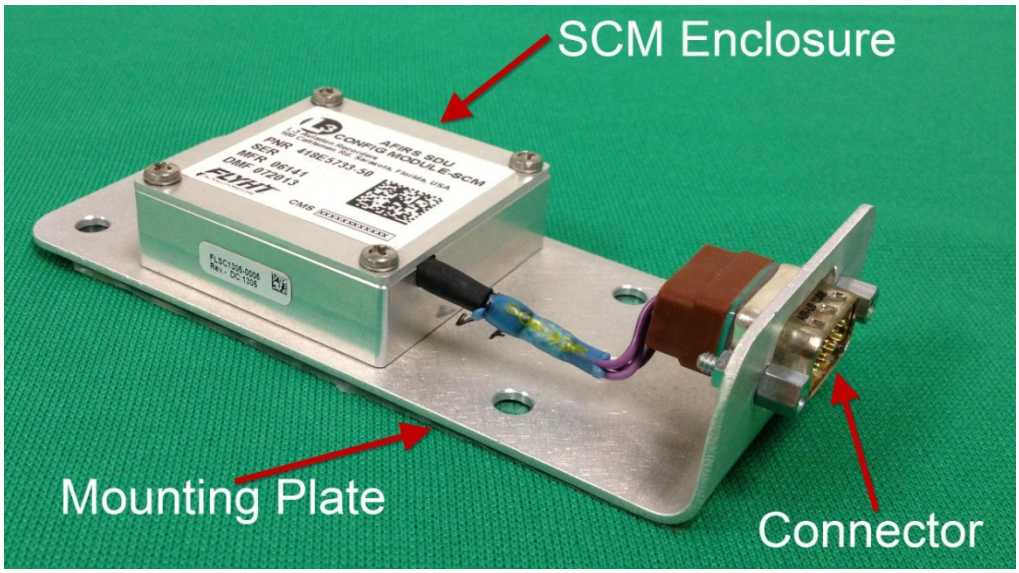

Figure 3-3 – Airbus Iridium SATCOM System SDU Configuration Module (SCM)

Typically, the SCM will be mounted on or near the ARINC 600 mounting tray used for the SDU. See Figure 3-4 for an outline of this component.

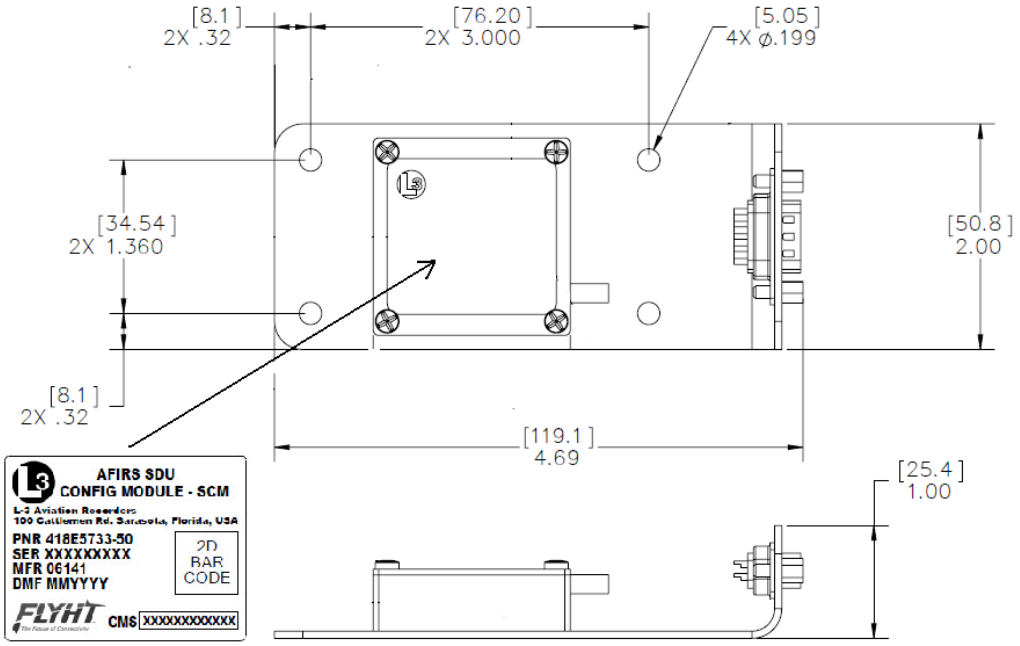

Figure 3-4 – SCM Outline Drawing (dimensions in [millimeters] and inches)

3.2.2 Mechanical Specifications

Dimensions:	1.00” x 2.00” x 4.69” (25.4mm x 50.8mm x 119.1mm)
Weight:	0.4 lbs. (0.18 kg) Max.
Material/Finish:	Aluminum alloy with clear chromate per MIL-DTL-5541, Type II, Class 3 on all surfaces

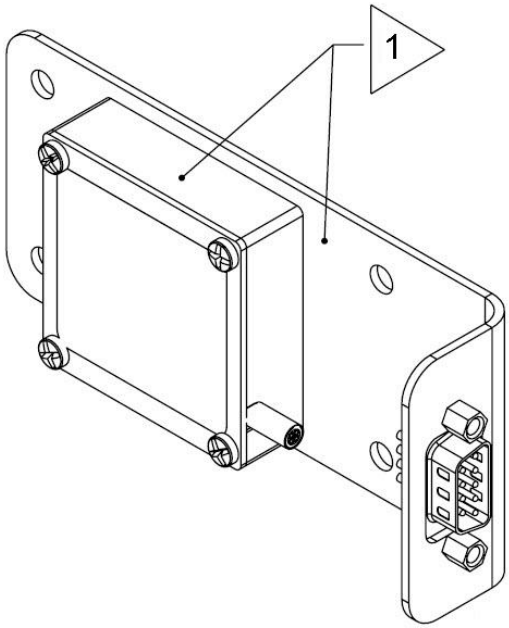

Figure 3-5 – SCM Oblique View (Note 1: Resistance between mounting plate and module not to exceed 20 milli-ohms. Also, resistance between mounting plate and aircraft structure not to exceed 20 milli-ohms.)

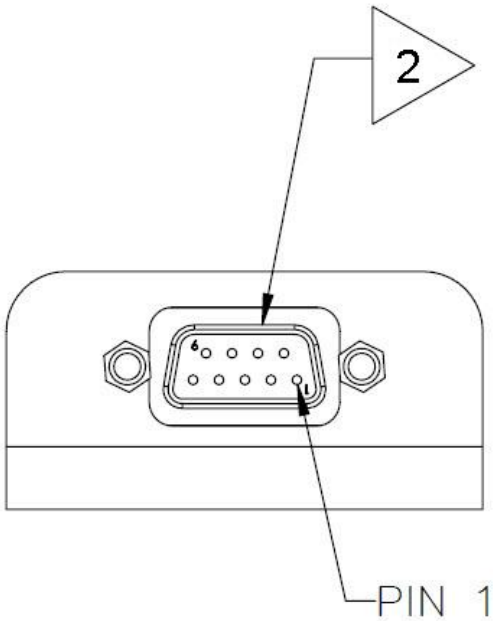

Figure 3-6 – SCM Connector View Showing Location of Pin 1 (Note 2: Connector is a 9-pin D-Sub, P/N ABS1145A09P03B.)

3.2.3 Environmental Specifications

Refer to Appendix C – Environmental Qualification Forms for environmental testing conditions, categories and descriptions of the conducted tests of the SCM.

3.3 Airbus Iridium SATCOM System Satellite Antenna

The antenna is a Commercial Off the Shelf (COTS) unit that is mounted on the top of the aircraft's fuselage – see Figure 3-7. It provides satellite connectivity for both the GPS and Iridium satellite systems.

Figure 3-7 – Airbus Iridium SATCOM System Antenna

3.4 Antenna Coaxial Cable

For details on the selection and installation of the antenna coaxial cable, please see Section 4.3.4, which provides recommended coaxial cable types to be used which meet the Airbus Iridium SATCOM System requirements. Figure 3-8 illustrates the Iridium antenna coaxial cable and connectors.

Figure 3-8 – Iridium Antenna Coaxial Cable and Connectors

3.5 Interface Specifications

This section describes the interface specifications of the Airbus Iridium SATCOM System components.

SDU Rear Connector (J1)

Table 3-1 – J1A Top Plug (TP) Insert

	A	B	C	D	E	F	G	H	J	K
1	Ethernet 1A Tx+	Ethernet 1A Rx+	O	O	Ethernet 2B Tx+	Ethernet 2B Rx+	O	O	Ethernet 3B Tx+	Ethernet 3B Rx+
2	Ethernet 1A Rx-	Ethernet 1A Tx-		O	Ethernet 2B Rx-	Ethernet 2B Tx-	O	O	Ethernet 3B Rx-	Ethernet 3B Tx-
3	O	O	O	O	O	O	O	O	O	O
4	O	O	O	O	O	O	O	O	O	O
5	Ethernet 4B Tx+	Ethernet 4B Rx+	O	O	O	O	O	O	O	O
6	Ethernet 4B Rx-	Ethernet 4B Tx-	O	O	O	O	O	O	O	O
7	O	O	O	O	O	O	O	O	O	O
8	O	O	O	O	O	O	O	O	O	O
9	O	O	O	O	O	O	O	O	O	O
10	O	O	O	O	O	O	O	O	O	O
11	O	O	O	O	O	O	O	O	O	O
12	O	O	O	O	O	O	O	O	O	O
13	O	O	O	O	O	O	O	O	O	O
14	O	O	O	O	O	O	O	O	O	O
15	O	O	O	O	O	O	O	O	O	O

Table 3-2 – J1B Middle Plug (MP) Insert

	A	B	C	D	E	F	G	H	J	K
1	O	O	O	O	O	O	No. 1 A429Rx A	No. 1 A429Rx B	No. 1 A429Tx A	No. 1 A429Tx B
2	Ext. 1 Mic Audio Hi	Ext. 1 Mic Audio Lo	Ext. 1 Audio Out Hi	Ext. 1 Audio Out Lo	O	O	O	O	O	O
3	O	O	No. 2 A429Rx A	No. 2 A429Rx B	No. 3 A429Rx A	No. 3 A429Rx B	No. 4 A429Rx A	No. 4 A429Rx B	No. 2 A429Tx A	No. 2 A429Tx B
4	O	O	O	O	O	O	O	O	SCM Power	SCM Ground
5	No. 1 Discrete Output	LGCIU 1 Discrete Input	No. 2 Discrete Input	No. 3 Discrete Input	No. 4 Discrete Input	No. 5 Discrete Input	No. 6 Discrete Input	No. 7 Discrete Input	SCM Data	SCM Clock
6	No. 5 A429Rx A	No. 5 A429Rx B	No. 6 A429Rx A	No. 6 A429Rx B	No. 7 A429Rx A	No. 7 A429Rx B	No. 8 A429Rx A	No. 8 A429Rx B	No. 9 A429Rx A	No. 9 A429Rx B
7	No. 10 A429Rx A	No. 10 A429Rx B	No. 3 A429Tx A	No. 3 A429Tx B	No. 4 A429Tx A	No. 4 A429Tx B	No. 11 A429Rx A	No. 11 A429Rx B	No. 1 RS232 Com	No. 4 RS232 Com
8	No. 8 Discrete Input	No. 2 Discrete Output	No. 12 A429Rx A	No. 12 A429Rx B	No. 3 Discrete Output	No. 9 Discrete Input	No. 4 Discrete Output	No. 10 Discrete Input	No. 13 A429Rx A	No. 13 A429Rx B
9	No. 2 RS232 Com	No. 3 RS232 Com	No. 5 A429Tx A	No. 5 A429Tx B	No. 1 RS422Tx-RS232TXD	No. 1 RS422Tx+RS232RTS	No. 1 RS422Rx+RS232RXD	No. 1 RS422Rx-RS232CTS	No. 2 RS422Tx-RS232TXD	No. 2 RS422Tx+RS232RTS
10	No. 2 RS422Rx+RS232RXD	No. 2 RS422Rx-RS232CTS	No. 3 RS422Tx-RS232TXD	No. 3 RS422Tx+RS232RTS	No. 3 RS422Rx+RS232RXD	No. 3 RS422Rx-RS232CTS	No. 4 RS422Tx-RS232TXD	No. 4 RS422Tx+RS232RTS	No. 4 RS422Rx+RS232RXD	No. 4 RS422Rx-RS232CTS
11	No. 11 Discrete Input	No. 12 Discrete Input	No. 13 Discrete Input	No. 14 Discrete Input	No. 15 Discrete Input	LGCIU HPP	No. 5 Discrete Output	No. 6 Discrete Output	No. 7 Discrete Output	No. 8 Discrete Output
12	No. 14 A429Rx A	No. 14 A429Rx B	No. 6 A429Tx A	No. 6 A429Tx B	A717Rx A	A717Rx B	No. 15 A429Rx A	No. 15 A429Rx B	No. 16 A429Rx A	No. 16 A429Rx B
13	Fault Output N/C	Fault Output N/O	O	O	O	O	O	O	O	O
14	O	Chime Output	O	O	O	O	O	O	O	O
15	O	O	O	O	O	O	Phone Ext. 2 Tip	Phone Ext. 2 Ring	Phone Ext. 3 Tip	Phone Ext. 3 Ring

Table 3-3 – J1C Bottom Plug (BP) Insert

Pin	Size	Description
1	20	Not Used
2	12	Primary 28 VDC Power Input
3	12	Power Ground
4	20	Not Used
5	20	Not Used
6	20	Not Used
7	12	Not Used
8	12	Chassis Ground
9	16	Not Used
10	16	Not Used
11	16	Not Used
12	5	Not Used
13	5	Iridium/GPS Antenna

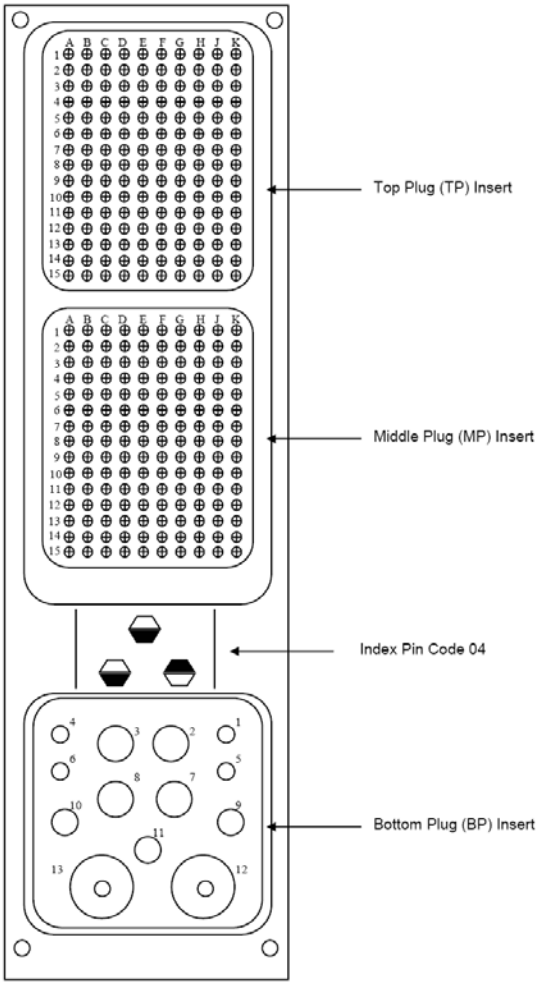

Figure 3-9 – SDU Connector Map

3.5.1 Power Input

The Airbus Iridium SATCOM System is powered by +28 VDC.

3.5.2 Chassis Ground

For redundant chassis ground connection only. Not to be used as a normal current carrying conductor.

Quantity:	1
Format:	DC Chassis Ground

3.5.3 ARINC 429 Digital Serial Bus Input

Quantity:	16
Format:	DITS, ARINC 429 Low or high speed
Low Speed Data Rate:	12.5 Kbps ± 1%
High Speed Data Rate:	100 Kbps ± 1%
SSM/SDI/Data Definition:	Software Selectable Protocols

3.5.4 ARINC 429 Digital Serial Bus Output

Quantity:	6
Format:	DITS, ARINC 429 Low or high speed
Low Speed Data Rate:	12.5 Kbps ± 1%
High Speed Data Rate:	100 Kbps ± 1%
SSM/SDI/Data Definition:	Software Selectable Protocols

3.5.5 Ethernet

Quantity:	4
Format:	802.3 10BASE-T/100BASE-TX, half- and full-duplex modes (auto-negotiated) ARINC 664P2 Physical Layer

3.5.6 Discrete Inputs

Quantity:	16 Configurable
Input Impedance:	>10 kΩ
Fault Current:	<15 mA
DIN+ Voltage Range:	Logic High: 7.0 – 36.0 VDC Logic Low: 0 – 3.5 VDC
Pulse Width (Min):	100 ms

3.5.6.1 Configurable Inputs

Each configurable discrete input is individually software-configurable for the following:

- Signal Level: Open-Ground (Negative-Seeking) or Open-28V (Positive-Seeking)
- Logic Assignment: Active Low or Active High
- Function: Selected from list.

Refer to §6.10 for additional information on use of configurable inputs.

3.5.7 Discrete Outputs

Each discrete output transitions between an 'Open Circuit' (high-impedance-to-ground) and a 'Closed Circuit' (low-impedance-to-ground) state to indicate a change in output logic.

Quantity:	8 Configurable
'Open Circuit' Impedance:	>100 kΩ
'Open Circuit' Voltage (Max.):	36 VDC
'Closed Circuit' Current Limit (Min.):	500 mA
Voltage Across 'Closed Circuit':	<1.25 V

3.5.7.1 Configurable Outputs

The Discrete Outputs use 'Open-Closed' signal levels, where the output is either high-impedance to ground (Open) or low-impedance to ground (Closed). Each configurable discrete output is individually software-configurable for the following:

- Logic Assignment: Active Low (Closed) or Active High (Open)
- Function: Selected from list.

Refer to §6.11 for additional information on use of configurable outputs.

3.5.8 Two-Wire Phone

Quantity:	2
Format:	Standard 2-Wire Tip and Ring Loop
Loop Battery:	48 ±4 VDC
Ring Signal:	20 Hz ±10%, 90 ±10 VAC RMS
Hook Flash:	<700 ms
Load Impedance (Nom.):	600 Ω
Polarity Sensitivity:	None
Audio Band Pass:	300 – 3400 Hz

3.5.9 Microphone Input

Quantity:	1
Format:	Standard DO-214 Microphone Input
Dynamic Range:	20 mV to 1.5 V RMS
Input Impedance:	150 Ω ± 20%
Mic. Bias (No Load):	16 ± 0.5 V
Mic. Bias Ripple:	<1 mV RMS in the 300 – 3400 Hz band

Sidetone:	Provided by System to Interphone Output
Sidetone Level:	Software Configurable
Audio Band Pass:	300 – 3400 Hz

3.5.10 Iridium / GPS Antenna

Coaxial Cable Insertion Loss (Max.):	3 dB @ 1626.5 MHz

3.6 SDU Maintenance Connector (J2)

The Airbus Iridium SATCOM System SDU provides an RJ-45 Maintenance Port connector on the front panel which provides for Ethernet connection to Ground Service Equipment (GSE) e.g. a laptop or Personal Computer with a standard web browser.

3.7 SDU Configuration Module (SCM)

The SCM and antenna connect directly to the SDU. The SDU is the heart of the system and provides all of the interfaces to other aircraft systems.

3.8 ARINC 429 Receiver Protocols

Table 3-4 – ARINC 429 Receiver Protocols – ATSU/FWC

Source: ATSU / FWC			**Speed:** High (Configurable)
Label	**Parameter**	**Format**	**Transmit Rate**
172	ATSU Identifier Word	BCD	1 s
214	ATSU ICAO Address Word 1	Boolean word	200 ms
216	ATSU ICAO Address Word 2	Boolean word	200 ms
270	ATSU Status Word and Monitoring	Boolean word	600 ms
307	SDU SAL	HYB	
377	ATSU Equipment Identifier	BCD	1 s
ARINC 618 Block Uplink	BOP (GFI=Eh)	ISO 5	N/A
ARINC 618 Block Downlink	BOP (GFI=Eh)	ISO 5	N/A

Table 3-5 – ARINC 429 Receiver Protocols – CFDS

Source: Airbus CFDS			**Speed:** Low (Configurable)
Label	**Parameter**	**Format**	**Transmit Rate**
125	Time (UTC)	BCD	1 s
126	Flight Phases	BNR	1 s
155	Aircraft Configuration (Printer, ACARS, etc.)	Discrete word	1 s
156	Aircraft Type	Discrete word	1 s
157	Aircraft Configuration (ATSU2, ATSU1)	Discrete word	1 s
227	CFDS BITE Command	ISO 5	120 ms
233	Flight Number 1, 2	ISO 5	4 s
234	Flight Number 3, 4	ISO 5	4 s
235	Flight Number 5, 6	ISO 5	4 s
236	Flight Number 7, 8	ISO 5	4 s
260	BCD Date YY/MM/DD	BCD	1 s
301	Aircraft Identification 1,2,3 (ORT parameter)	ISO 5	4 s
302	Aircraft Identification 4,5,6 (ORT parameter)	ISO 5	4 s
303	Aircraft Identification 7,8,9 (ORT parameter)	ISO 5	4 s
304	Fleet Identification, Aircraft Type	ISO 5	4 s

Table 3-6 – ARINC 429 Receiver Protocols – MCDU

Source: ARINC 739A MCDU			**Speed:** Low (Configurable)
Label	**Parameter**	**Format**	**Transmit Rate**
377	MCDU Identifier	BCD	1 s
270	Discrete Word #1	Discrete word	1 s
350	Maintenance Word #1	Discrete word	1 s
307	SDU SAL	HYB	

3.9 ARINC 429 Receiver Activity Status

Defines the criteria the Airbus Iridium SATCOM System uses for determining whether a receiver port is active. A bus is generally declared active when 4 consecutive words at the specified rate are received, and declared inactive when 4 consecutive samples fail.

Table 3-7 – ARINC 429 Receiver Port Monitoring

Receiver	Activity Label	Min. Update Rate
ATSU / FWC	270	1 Hz
ARINC 739A MCDU	270 / 377	1 Hz
Airbus CFDS	125 / 260	1 Hz

3.10 ARINC 429 Transmitter Protocols

Table 3-8 – ARINC 429 Transmitter Protocols SDU – ATSU/FWC

3.10.1 From SDU to ATSU / FWC				
Destination: ATSU / FWC			**Speed:** High (Configurable)	
Label	**Parameter**	**Format**	**Transmit Rate**	**Update Rate**
172	SDU Identifier	BCD	1 s	–
270	SDU Status Word and Monitoring	Boolean word	1 s	-
304	ATSU SAL	HYB		
ARINC 618 Block Uplink	BOP (GFI=Eh)	ISO 5	N/A	-
ARINC 618 Block Downlink	BOP (GFI=Eh)	ISO 5	N/A	-

Table 3-9 – ARINC 429 Transmitter Protocols SDU – MCDU

3.10.2 From SDU to MCDU				
Destination: ARINC 739A MCDU			**Speed:** Low (Configurable)	
Label	**Parameter**	**Format**	**Transmit Rate**	**Update Rate**
172	Subsystem Identifier	BCD	1 s	–
377	Equipment Identifier	BCD	1 s	–
220	MCDU Address Label for MCDU#1			
221	MCDU Address Label for MCDU#2			
222	MCDU Address Label for MCDU#3			

Table 3-10 – ARINC 429 Transmitter Protocols SDU – CFDS

3.10.3 From SDU to Airbus CFDS				
Destination: Airbus CFDS			**Speed:** Low (Configurable)	
Label	**Parameter**	**Format**	**Transmit Rate**	**Update Rate**
354	LRU Identification (PN, SN)	ISO 5	500 ms	–
356[1]	Fault Status	ISO 5	200 ms	-
377	ARINC 429 Equipment Identifier	BCD	1 s	–

Notes:
1. Label 356 is only transmitted when the system is in Operational or Maintenance mode and there are no active failures or faults.

4. INSTALLATION CONSIDERATIONS

This section provides information on the installation considerations for each of the Airbus Iridium SATCOM System components.

4.1 Satellite Data Unit (SDU)

The SDU is housed in an ARINC 600 2MCU enclosure, which is designed to be mounted in a standard ARINC 600 mounting tray. Figure 4-1 shows a typical ARINC 600 2MCU tray used for the SDU.

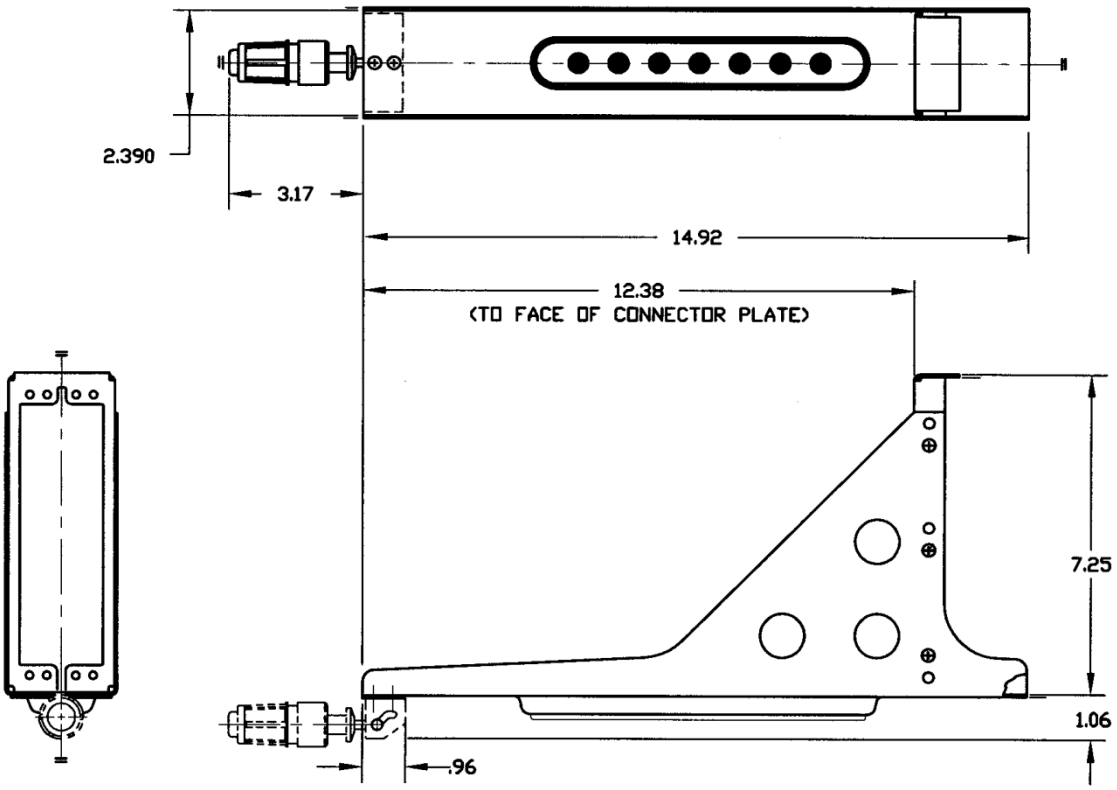

Figure 4-1 – 2MCU Mounting Tray

While the SDU does not require forced-air cooling, every attempt should be made to place the SDU in a benign and well-ventilated environment. Placing the SDU on a plenum shelf in the Electronics Bay of the aircraft and using a mounting tray that provides cooling air to the SDU is preferred.

The SDU tray should be electrically bonded to the airframe (<20 milliohms). It is recommended that the SDU be located where easy front panel access is available to facilitate replacing the flash card or connecting to the Maintenance Port.

4.2 SDU Configuration Module (SCM)

The SCM can be mounted on or near the SDU tray within 24 inches of the SDU rear connector. The SCM should be electrically bonded to the airframe (<20 milliohms). It is recommended that the SCM be located to provide easy access to the cover if ever the SIM card requires replacement. Refer to Figure 3-4 for the SCM mounting footprint.

4.3 Iridium Antenna System

The Airbus Iridium SATCOM System has a single combined Iridium/GPS RF connection on the rear interface connector, which is to be connected to a single combined Iridium/GPS Antenna. The antenna system is comprised of all the components from the rear interface connector up to and including the antenna. The total gain of the antenna system must be greater than 0 dB at 1626.5 MHz (measured at the antenna zenith).

Most Iridium antennas have a gain of +3 dBic at the zenith; therefore the maximum attenuation in the rest of the antenna system must be less than 3 dB. If an antenna with a different gain is selected, the maximum loss of the rest of the antenna system must be adjusted accordingly.

4.3.1 Antenna

Iridium SATCOM System Antenna: This is a passive antenna designed to cover the frequency range from 1565 MHz to 1626.5 MHz for Iridium transmit / receive operations and GPS reception. It is a low-profile, circular device that can be mounted directly to the aircraft fuselage. This antenna connects to the Iridium SDU through a coaxial cable – see Figure 3-8 Figure 3-7.

The antenna specifications are listed below:

Weight (Typical)

- 0.170 kg (6 oz.)

Overall Dimensions (Typical)

- Height: 16.8 mm (0.66 inches)
- Diameter: 89 mm (3.5 inches)

Manufacturer's Specification Reference Number

- Drawing 009E5733-00, Revision – Iridium Antenna – Passive, 1565 – 1626.5 MHz, RHCP – see Figure 4-2.
- Iridium SATCOM System Supplier Equipment Specification, Document No. 905-E5750-07, Revision –

Environmental Specifications

The Iridium SATCOM System antenna meets the environmental requirements of RTCA DO-262A where applicable as referenced in Document No. 905-E5809-42, Revision A.

Testing was performed to DO-160F, MIL-STD-810, EN-60068, ISO-2669, and the applicable ABDs unless otherwise noted.

- Temperature: -55° C (-67° F); to +85° C (+185° F)
- Altitude: -100 to +55,000 FT
- Vibration: 10 G's (DO-160D/E F2-AB)

Electrical Specifications

- Frequency: 1616.0 – 1625.5 MHz
- VSWR: ≤ 1.5:1
- Impedance: 50-Ohms
- Polarization: RHCP
- Axial Ratio: ≤ 3.0 db @ zenith
- Power Handling: 60 Watts CW

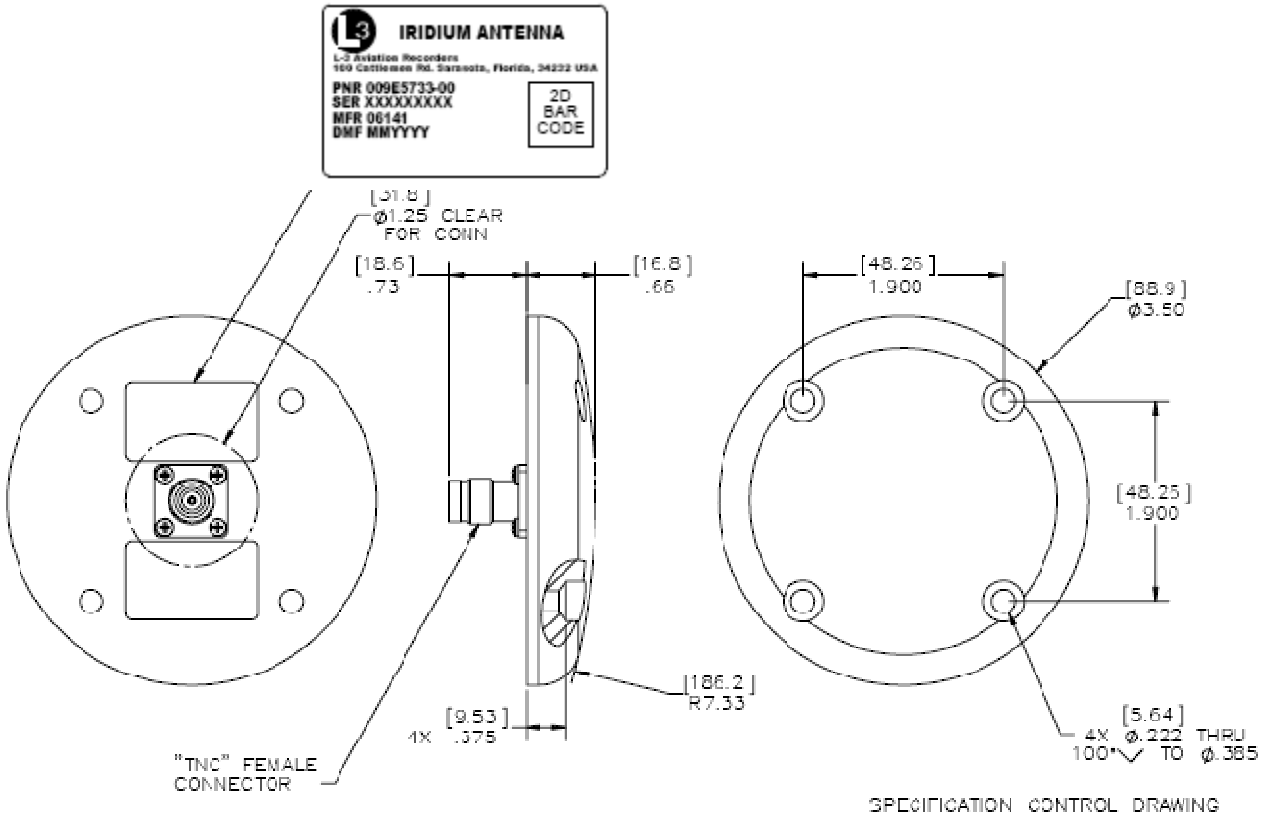

Figure 4-2 - Iridium Antenna, Outline and Dimensions

4.3.2 Antenna Mounting

A .020 Thick Conductive Gasket is provided. L-3 recommends using (4) screws, MS24693-C274 for mounting the Airbus Iridium Antenna – see Figure 4-3.

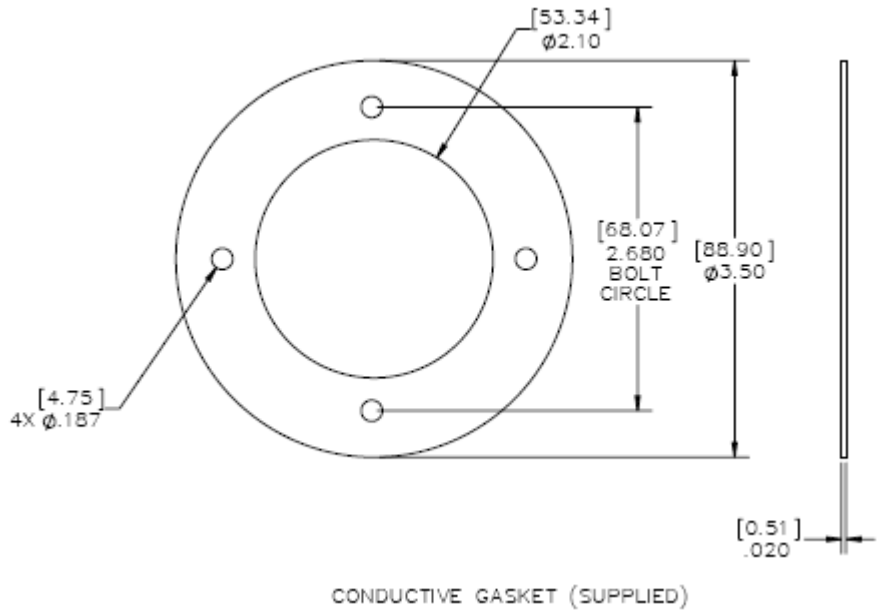

Figure 4-3 - Iridium Antenna, Gasket

4.3.3 Coaxial Cable

Iridium SATCOM System Coaxial Cable: This is an RF Cable designed to cover the frequency range from 1565 MHz to 1626.5 MHz for Iridium transmit / receive operations and GPS reception. It is a low-loss, aircraft-grade cable that will be mounted in the aircraft fuselage. This cable provides the interconnection between the Iridium SATCOM System Satellite Data Unit and the Iridium Antenna. The Coaxial Cable has an ARINC Size 5 coaxial contact installed on one end and a TNC male connector installed on the other.

There are three possible lengths for this Coaxial Cable. They are designated by the last two digits of the part number (01, 02 or 03) as listed below:

- 024E5733-01
- 024E5733-02
- 024E5733-03

The antenna coaxial specifications are listed below:

Weight (Typical)

- 024E5733-01 - 1.633 kg (57.6 oz)
- 024E5733-02 – 1.497 kg (52.8 oz)
- 024E5733-03 – 1.470 kg (51.8 oz)

Overall Dimensions (Typical)

- Length:

  024E5733-01 – 11.3 m (445.0 inches)

  024E5733-02 – 10.2 m (402.0 inches)

  024E5733-03 – 9.95 m (392.0 inches)
- Diameter: 8.1 mm (0.317 inches)

Manufacturer's Specification Reference Number

- Drawing 024E5733-00, Revision B; Iridium Antenna Coax Cable – see Figure 4-4.
- Iridium SATCOM System Supplier Equipment Specification, Document No. 905-E5750-07, Revision –

Environmental Specifications

The Iridium SATCOM System Coaxial Cable meets the environmental requirements of RTCA DO-262A where applicable as described in Document No. 905E5836-42. Testing was performed to DO-160F, EN 4604, EN 3475, and the applicable ABDs unless otherwise noted.

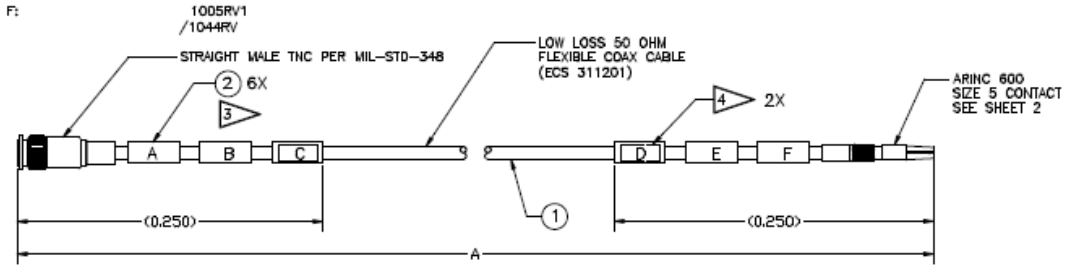

Figure 4-4 – Iridium Antenna Coaxial Cable

5. SATCOM INSTALLATION MATERIALS

In addition to the Airbus Iridium SATCOM System LRUs (SDU and SCM), the materials described in this section are generally required as part of a typical Airbus Iridium SATCOM System installation.

Note:
The system integrator is responsible to ensure that all installation materials used meet the regulatory requirements for the intended aircraft installation environment.

5.1 Required Materials

- ARINC 600 2MCU mounting tray
- ARINC 600 Size 2 connector, with contacts
- ARINC 600 ground block, with contacts
- Iridium antenna (ref.4.3.1)
- Antenna coaxial cable(s) (ref. §4.3.3)
- System interface wiring (ref. §6)

6. SYSTEM INTERFACE WIRING

This section provides information on the system interface wiring required for the Airbus Iridium SATCOM System.

6.1 General

All wire types and installation practices must comply with the requirements for the aircraft. Unless otherwise noted, minimum wire size is 22 AWG for standard copper wire or 24 AWG for high strength copper alloy wire.

Terminate all shields at ground block or ground stud on SDU tray. Keep shield drains and unshielded conductor lengths as short as practicable (<3”).

6.2 Primary Power, Antenna, and SCM

The primary power, antenna, and SCM connections shown in Figure 6-1 are required for all Airbus Iridium SATCOM System installations. The system will start and continue to operate whenever power (20.5 – 32.2 VDC) is available at the Primary Power Input pin (J1C-2).

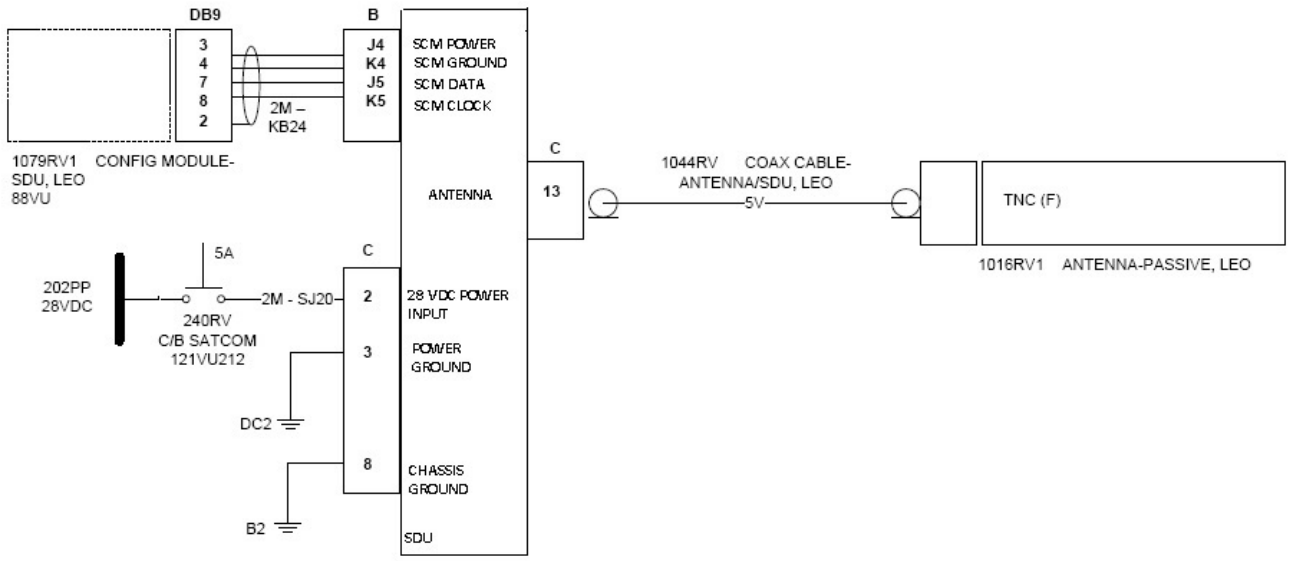

Figure 6-1 – Primary Power, Antenna, and SCM Interface

6.3 ARINC 429 Interfaces

The Airbus Iridium SATCOM System has 16 ARINC 429 receive ports and 6 ARINC 429 transmit ports. Each port is software-configurable for high or low speed, and the receive ports are also individually software-configurable for odd, even or no parity checking. The transmit ports always transmit odd parity.

6.3.1 Receiver Protocols

Each of the ARINC 429 receivers can be configured in software for the proper protocol of the external aircraft system to which it is interfaced. Below is a list of the available ARINC 429 receiver protocols. (See §3.8 for the label specifications for each receiver protocol.) Once a protocol (except “None” is selected for any given receive port, it is no longer available for assignment to any of the other ports.

- None
- ACARS 1
- ACARS 2
- Airbus CFDS
- A739 MCDU 1
- A739 MCDU 2
- A739 MCDU 3

When an input is not connected to an active system (e.g. no connection, or wiring provisions only are installed), the port should be configured as “None” to avoid triggering bus inactivity faults.

6.3.2 Transmitter Protocols

Each of the ARINC 429 transmitters can be configured in software for the proper protocol of the external aircraft system to which it is interfaced. Below is a list of the available ARINC 429 transmitter protocols. (See §3.10 for the label specifications for each transmitter protocol.) Once a protocol (except “None”) is selected for any given port, it is no longer available for assignment to any of the other ports.

- None
- ACARS
- A739 MCDU
- Airbus CFDS

6.4 MCDU

If an ARINC 739A MCDU is installed, MCDU 1 should be connected to ARINC 429 Tx 1 and ARINC 429 Rx 1. For MCDU 2 and 3, ARINC 429 Rx ports 2 and 3 are used as shown in Figure 6-2, but any Rx port from 2 to 16 may be used.

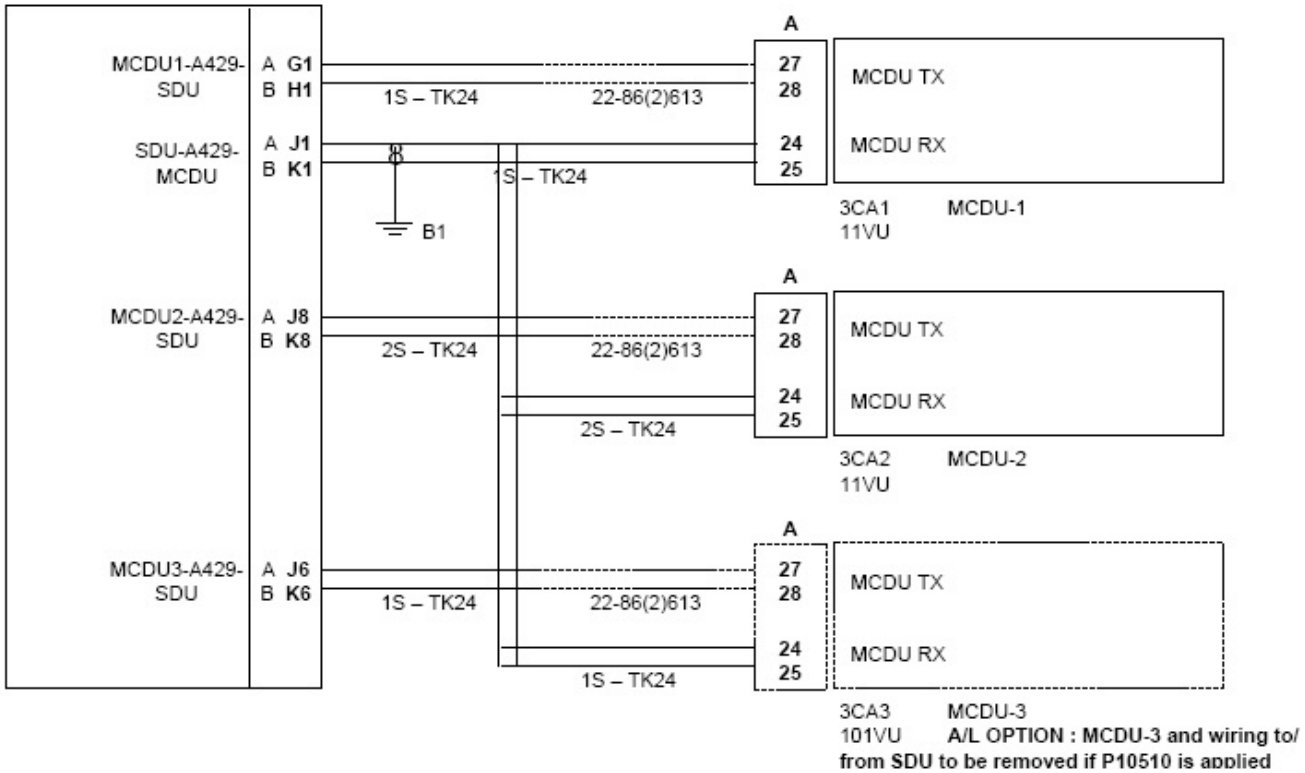

Figure 6-2 – MCDU Interface

6.5 ACARS ATSU

The ACARS ARINC 429 Tx interface provides safety-services data functionality for the Airbus Iridium SATCOM System. It is recommended that if the ACARS ATSU ARINC 429 Rx connection will not be utilized, that the wires be capped and stowed near the connectors as shown. ARINC 429 Rx port 4 is shown in Figure 6-3, but any Rx port from 2 to 16 may be used.

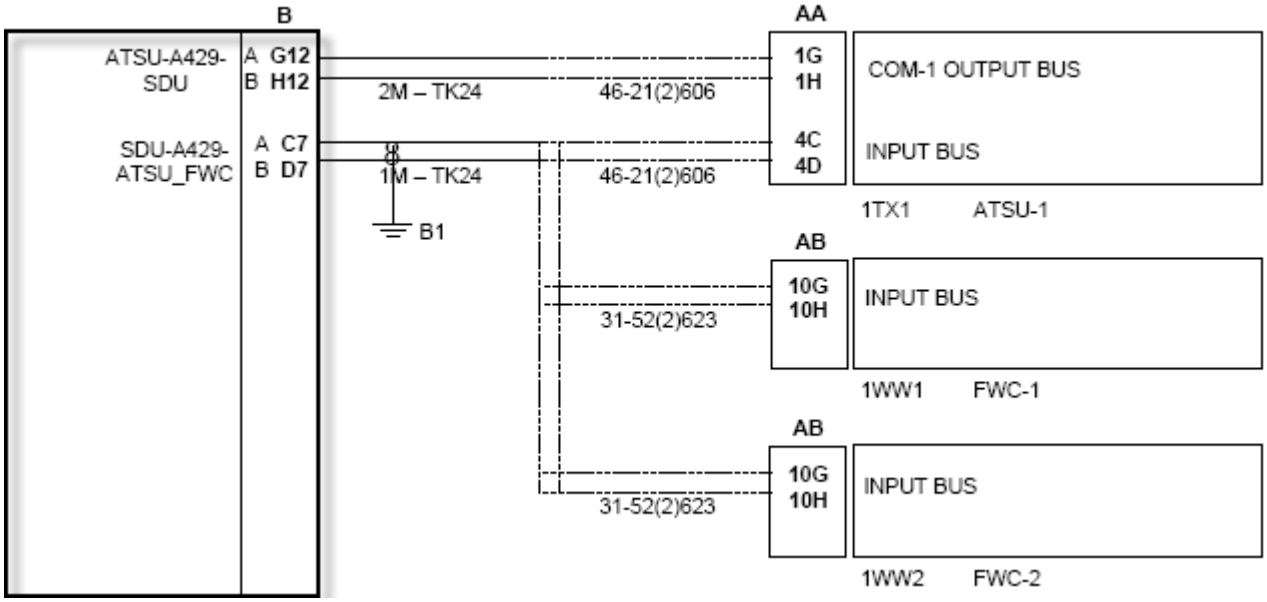

Figure 6-3 – ACARS ATSU Interface

6.6 CFDIU Interface

The SDU communicates with the Airbus Centralized Fault Display Interface Unit (CFDIU) over two ARINC 429 Low Speed busses, (1) input and (1) output as shown in Figure 6-4.

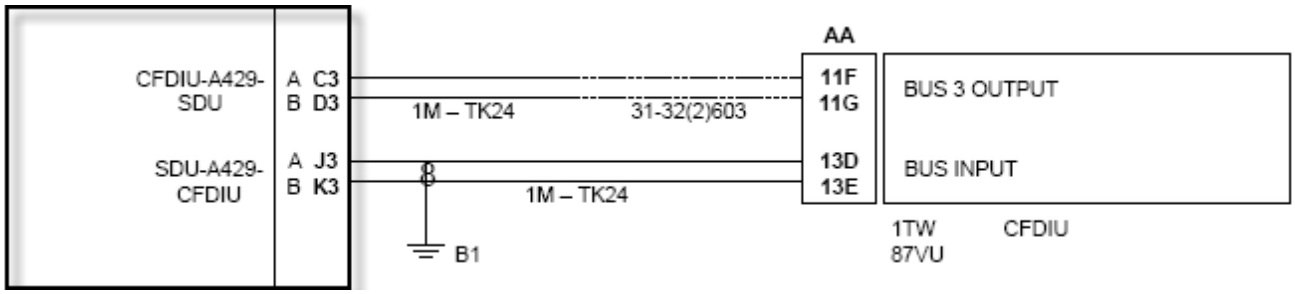

Figure 6-4 – CFDIU Interface

6.7 Date, Time and Position

The Airbus Iridium SATCOM System uses date, time and position information for numerous purposes, including information tags attached to various reports and events. Date, time and position information is provided by the system's internal GPS.

6.8 RS-232/422 Databus

The Airbus Iridium SATCOM System has four serial ports (transmit and receive). Each port is software-configurable for RS-232 or RS-422 mode. The speed, data bits, parity, stop bits, and flow control settings for each port are also software-configurable. See Figure 6-5.

Each serial port is assigned 5 pins on the rear connector. The function of these pins is dependent on whether RS-232 or RS-422 mode is being used.

Table 6-1 – Serial Port Pin Assignments

RS-232	RS-422	Port 1	Port 2	Port 3	Port 4
TXD	Tx-	9E	9J	10C	10G
RTS	Tx+	9F	9K	10D	10H
RXD	Rx+	9G	10A	10E	10J
CTS	Rx-	9H	10B	10F	10K
Com	Not Used	7J	9A	9B	7K

When configured for RS-232 mode, the serial ports support software (Xon/Xoff) and hardware (RTS/CTS) handshaking. If hardware handshaking is not being used, the RTS and CTS pins do not need to be connected.

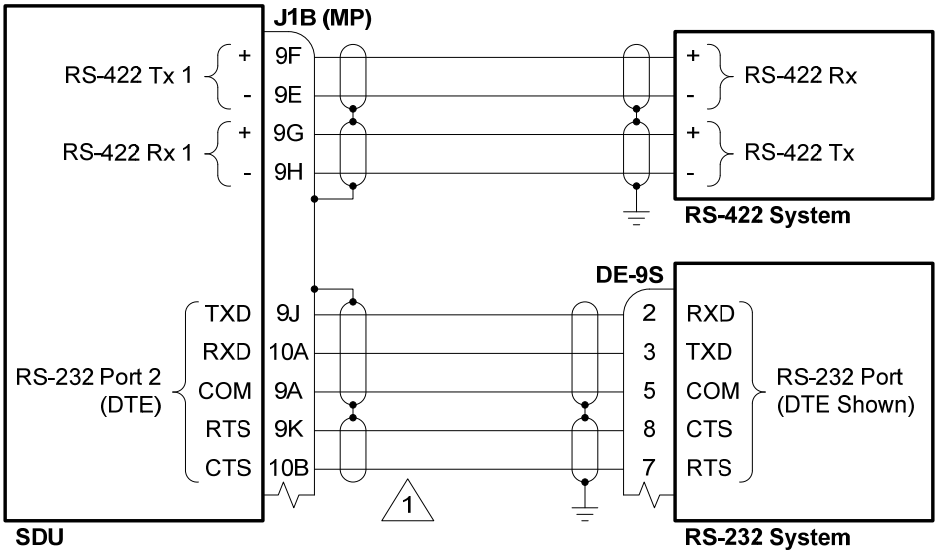

Notes:

1. If the system interface does not require or support hardware flow control, the RTS and CTS connections are not required.

Figure 6-5 – Serial Port Interface

6.9 Ethernet

The Airbus Iridium SATCOM System has four Ethernet ports (see Figure 6-6). Each port can auto-negotiate the best speed (10/100) and mode (full/half duplex). Port 1A is currently configured with a static IP address.

A 4-conductor Ethernet cable must be used. The rear connector pin layout provides slightly better noise immunity with a star-quad cable construction, but a twisted-pair cable construction can generally also be used. For star-quad cables, the conductor lay order should be maintained without crossing the conductors when terminating. For twisted-pair construction, the conductor twists should be maintained right up to the rear connector. In either case, the best noise immunity is obtained by keeping the strip length of the shield as short as physically possible, preferably <0.25 inches.

PIC P/N E51424 and ECS P/N 422404 are examples of aircraft-quality star-quad Ethernet cables that are typically suitable for use. PIC P/N E40424 and ECS P/N 922404 are examples of aircraft-quality twisted-pair Ethernet cables that are typically suitable for use.

Each of the Ethernet ports can be configured in software for the proper protocol of the external aircraft system to which it is interfaced. Below is a list of the available protocols.

- None
- Not Monitored

- Monitored

Unused Ethernet ports should be configured as “None.” A “Monitored” port is one where the system expects an active link and it will generate a fault if the Ethernet link to the external system is not available. For example, if the SDU is connected by Ethernet to a Class 2 EFB that is routinely turned off and stowed for take-off and landing, the port should be configured as “Not Monitored” or the system will generate a fault whenever the EFB is disconnected.

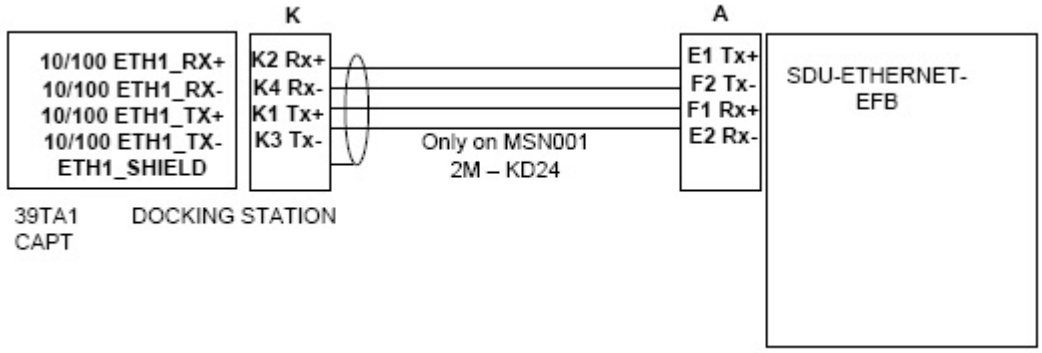

Figure 6-6 – Ethernet Interface

6.10 Discrete Inputs

The Airbus Iridium SATCOM System has 16 Discrete Inputs, of which 14 are software-configurable for Open-Ground or Open-28V signaling levels, Active High or Active Low logic, and the assigned function.

6.10.1 Landing Gear Control Interface Unit (LGCIU) Input

Discrete Input No. 1 (Din 1) is dedicated for use as a Landing Gear Control Interface Unit (LGCIU1) input. When there is only one LGCIU input (i.e. the LGCIU2 function is not assigned to a Discrete Input; see §6.10.2) and the ‘LGCIU1’ input transitions to the active state, the system is signaled that the aircraft is on the ground, and the inactive state indicates that the aircraft is in the air.

LGCIU1 (Din 1) is only an Open-Ground input; it cannot be configured as an Open-28V input. A Hardware Programming Pin (HPP) is provided to set whether the LGCIU1 input is Active High or Active Low. If the LGCIU HPP pin (J1B-11F) is tied low, LGCIU1 is configured as an Active Low input, i.e. Ground = On Ground. If the LGCIU HPP pin is connected to ground, LGCIU1 is configured as an Active High input, i.e. Ground = In Air.

If one of the configurable Discrete Inputs is configured for the LGCIU2 function (see §6.10.2), the following logic is used to determine the aircraft’s Air-Ground status:

- When the ‘LGCIU1’ discrete input is in the active state (as configured by the LGCIU HPP strapping) and the ‘LGCIU2’ discrete input is in the active state (as defined by the ICT setting for the discrete input configured as ‘LGCIU 2’), the aircraft is considered as ‘on the ground.’

- When any of the LGCIU discrete inputs are in the inactive state, the aircraft is considered as 'in the air.

6.10.2 Function Assignment

The discrete inputs are software configurable. Once a function is selected for any given input, it is no longer available for assignment to any of the other inputs. See Figure 6-7.

The 'Mic On', and 'Call Light' functions are used in conjunction with the Extension 1 audio interface and are discussed in §6.12.1.1 below.

Discrete Input No. 1 (Din 1) is dedicated as a LGCIU input. Only Discrete Inputs Din 2 through Din 15 are software-configurable. Discrete Input No. 16 (Din 16) is dedicated as "aircraft on ground" (LGCIU HPP).

None

When an input is not connected to an active system (e.g. no connection, or wiring provisions only are installed), the input should be configured as "None."

System Reset

The System Reset Discrete Input, when configured, will reset the system only after an inactive to active transition. The system will reset only once even if the discrete input is left active. The System Reset function is independent of the 'In-Air' or 'On-Ground' status of the aircraft.

Landing Gear Control Interface Unit 2 (LGCIU2)

A second Landing Gear Control Interface Unit input may optionally be provided to the AFIRS system. Refer to §6.10.1 for the logic used when a 'LGCIU2' input is provided.

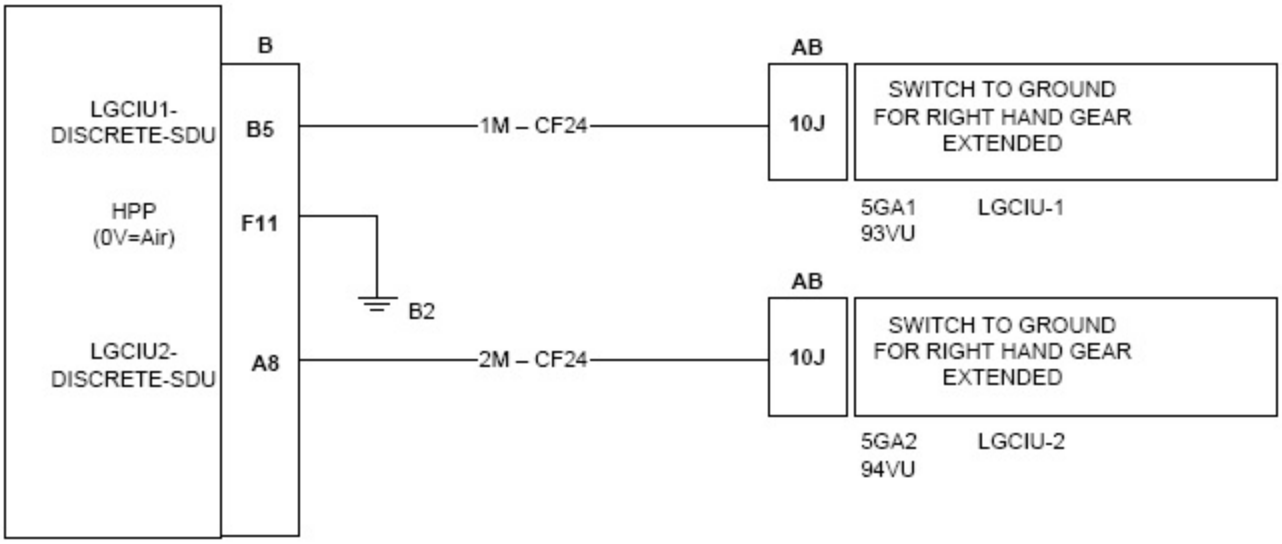

Figure 6-7 – Discrete Input Interfaces

6.11 Discrete Outputs

The Airbus Iridium SATCOM System has 8 configurable Discrete Outputs, each of which is software-configurable for Active High or Active Low logic and the assigned function. The Discrete Outputs use 'Open-Closed' signal levels, where the output is either high-impedance to ground (Open) or low-impedance to ground (Closed).

Once a function (except "None") is selected for any given output, it is no longer available for assignment to any of the other outputs.

6.12 SATCOM

This section describes the interface and integration requirements for the Airbus Iridium SATCOM System with an Audio Integrating System.

6.12.1 Audio Integrating System

Extension 1 is generally intended to be connected to the aircraft's audio integrating system for flight crew use. The interfaces required to fully support this functionality vary significantly depending on the design of the audio integrating system. Generally, the MCDUs are used for control and display of the SATCOM functions for Extension 1.

6.12.1.1 Audio Discrete Signals

There is one discrete input and one discrete output that can be used to support the integrated audio interface.

Mic On Input

The 'Mic On' function is dedicated as a 'Latched ACP' mode; therefore, Voice Extension 1 (Mic/Phone input) will answer an incoming call when the 'Mic On' input transitions to the active state. Once a call is in progress, the microphone audio channel will function as long as the 'Mic On' input is in the active state. If a call is in progress and the 'Mic On' input toggles to the inactive state, the call will be terminated. For outgoing calls when the 'Mic On' input is configured for 'Latched ACP', the function is dependent on which control source is configured for Extension 1. When an MCDU is the Extension 1 dialing control, setting the 'Mic On' input to the active state will initiate the dialing process using the phone number preselected on the MCDU.

Call Light Output

The 'Call Light' output is software configurable for either steady or flashing lights. When an incoming voice call is ringing, the 'Call Light' output will transition to the active state; either in a steady state or flashing at approximately a 1 Hz rate. When the incoming call is subsequently answered, the 'Call Light' output will remain active in the steady state as long as the call is in progress. When the call in progress is terminated, the 'Call Light' output will go inactive.

6.12.1.2 Latched ACP Configuration

If the Audio Integrating System provides a latched Mic On output, the following interface can be used. When an incoming call is ringing and the SATCOM switch on the Audio Control Panel is pressed, the call will be answered and microphone audio will always be live. The SATCOM switch on the Audio Control Panel is pressed a second time to end the call. Calls cannot be answered and terminated on the MCDU screen in this configuration.

The following diagram also shows how the Call Light output can be interfaced to an Audio Integrating System that provides SATCOM visual and aural call indications. In this case, a Call Light, Chime and Chime Reset switch are not required. See Figure 6-8.

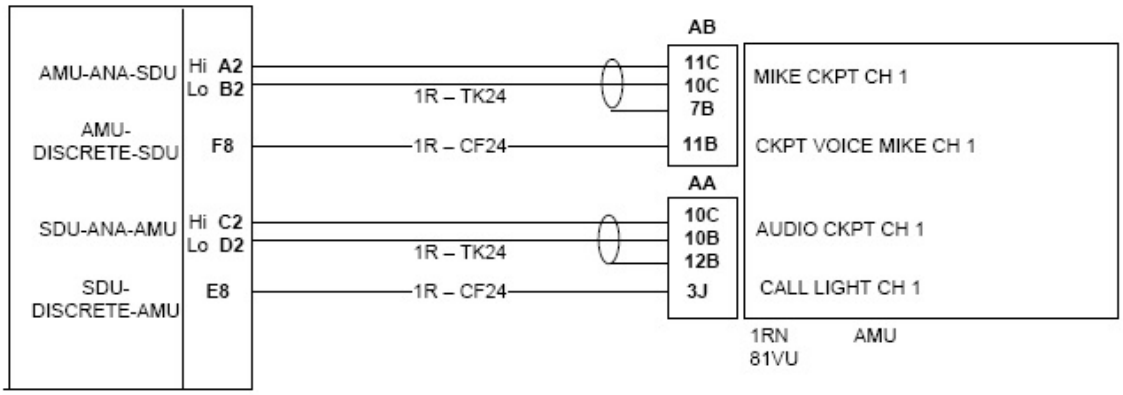

Figure 6-8 – Latched ACP Audio Interface

7. SATCOM SYSTEM CONFIGURATION

You configure the Airbus Iridium SATCOM System Satellite Data Unit (SDU) via Ethernet using a laptop, web browser, and the AFIRS Maintenance User Interface (MUI).

Note:
The MUI only accepts English-language characters and numbers.

IMPORTANT: This manual provides information on how to connect to the Maintenance Port and access the Maintenance User Interface (MUI). It also provides general information on the steps required to configure and update the Airbus Iridium SATCOM System.

The Airbus Iridium SATCOM System has an Ethernet interface for the Maintenance Port connection. An RJ-45 Maintenance Port jack is located behind the access door on the front panel of the SDU as shown in Figure 7-1.

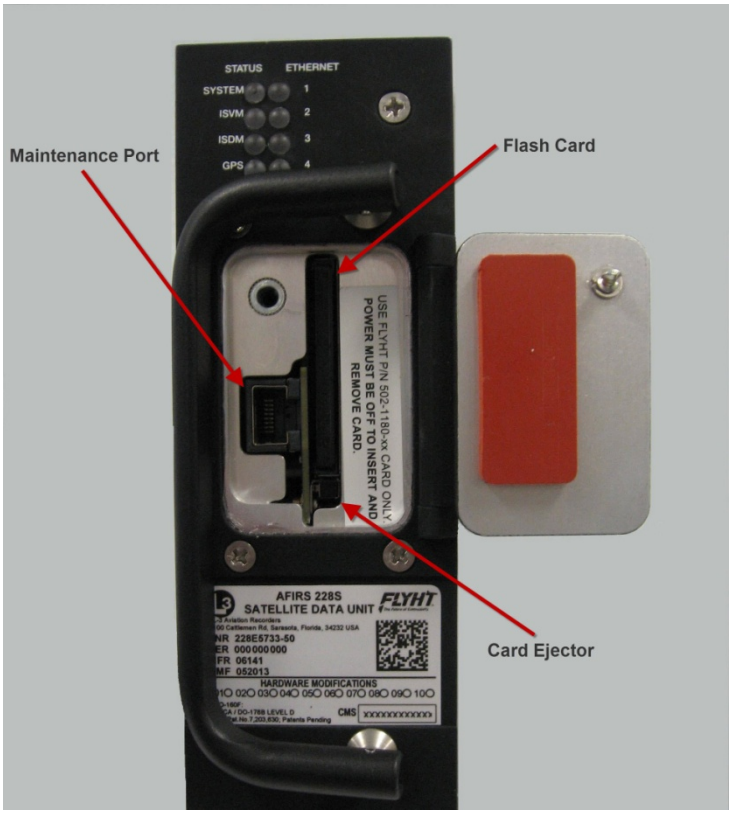

Figure 7-1 – Maintenance Port Location

Note:
When performing the initial configuration of an installed system, perform and complete the Before Power-On Tests in section 8.1 before applying power to the Airbus Iridium SATCOM System.

7.1 Accessing the Maintenance User Interface (MUI)

You access the AFIRS MUI by connecting an Ethernet cable to the Maintenance Port of the SDU. Alternatively, as described in section 6.9, Ethernet Port 1A can be used.

Also, if an Electronic Flight Bag (EFB) with a supported web browser installed is connected to one of the rear Ethernet port connections, the EFB can be used as an AFIRS maintenance terminal and a laptop is not required.

To access the Maintenance User Interface (MUI):

1. Connect an Ethernet cable either to the Maintenance Port via the front panel access door of the SDU or through the rear Ethernet Port 1A connection. Note that the Airbus Iridium SATCOM System power may be on or off.
2. Connect the other end of the Ethernet cable to a laptop that is running a web browser.

Note:
It is recommended to use Mozilla Firefox ® as the Internet browser with the SDU. The laptop network adapter must be set to the same subnet mask as the SDU (i.e. 255.255.255.0).

3. If not already powered, apply power to the SDU.
4. Confirm that the green link light (adjacent to Maintenance Port RJ45 connector) is illuminated, either steady or flashing (a flashing link light indicates that data is being transmitted).
5. Open a web browser on the laptop. In the Address bar, type one of the two following IP addresses depending on the connection point:

   192.168.128.1 (if connecting to the Maintenance Port at the front panel of the SDU – see Figure 7-1.)

   10.0.0.238 (if connecting to the rear Ethernet Port 1A. – see Figure 6-6).

Note:
Before opening the Web page, clear the cache of the Web browser or Ctrl+F5 and reopen the Web page.

The Airbus Iridium SATCOM System Home page appears with the **General** tab information displayed – see Figure 7-2 – Home Page – General Tab.

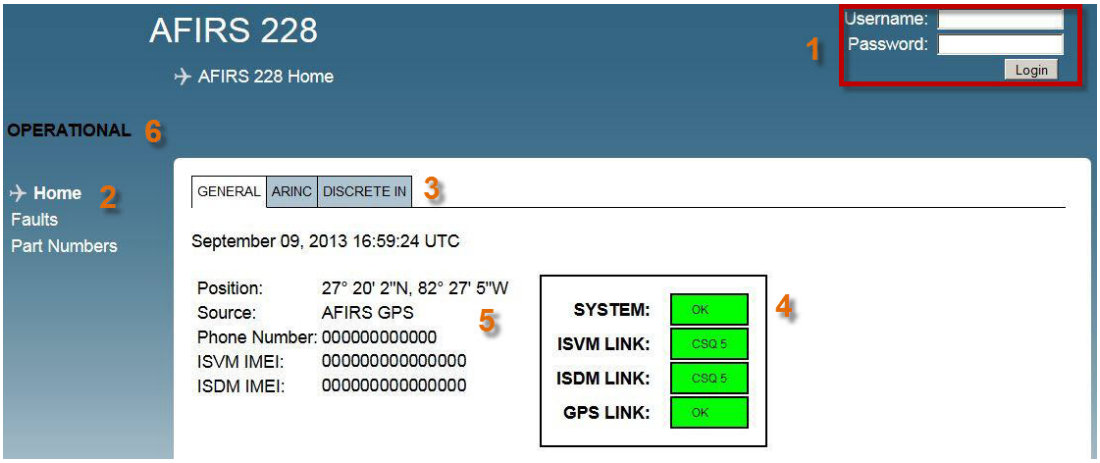

Figure 7-2 – Home Page – General Tab

The default view opens to the **Home** page **General** tab (see Figure 7-2) which displays the following information:

1 Login area

2 Menu of available links to pages accessible to various users upon login

3 Tabs: **General**, **ARINC**, and **Discrete In**

4 System and Link status display area

5 System information data display area

6 Mode: OPERATIONAL, MAINTENANCE, INITIALIZING, etc.

7.1.1 Home Page Tab Descriptions

To open the MUI Home Page, there is no user name and password required.

The **General** tab page displays:

- **UTC Date and Time**: This is correlated to a GPS clock if ICT parameter 'Internal GPS = Active'. If no link is available (i.e. during startup) a default date is displayed.
- **Position**: This is the AFIRS GPS position. If no GPS is fixed, no GPS will be displayed.
- **Phone Number**: Displays the aircraft phone number (12 digits).
- **ISVM IMEI**: Iridium Satellite Voice Modem International Mobile Equipment Identity (15 digits).
- **ISDM IMEI**: Iridium Satellite Data Modem International Mobile Equipment Identity (15 digits).
- **Airbus Iridium SATCOM System Status Indicators**:

  System: Yellow (INIT) initializing; Green (OK), Yellow (FAULT), Yellow (blank) indicates that system is in Maintenance Mode; Red indicates SDU Configuration Module (SCM) or Satellite Data Unit (SDU) Hardware failure or other critical error.

ISVM LINK: Yellow (NO LINK) no Iridium link if CSQ (Channel Signal Quality) is 0-1; Green (OK) if CSQ is 2-5

ISDM LINK: Yellow (NO LINK) no Iridium link if CSQ (Channel Signal Quality) is 0-1; Green (OK) if CSQ is 2-5

GPS LINK: Yellow (NO FIX), Green (OK)

The **ARINC** tab displays the status of the 16 ARINC 429 RX channels. The status of a configured function is either ACTIVE (green) or FAULT (red). The ARINC 717 RX configuration is currently not used.

The **DISCRETE IN** tab displays the state of the 16 Discrete Inputs. The state of the configured functional input is either ACTIVE (green) or INACTIVE (blue).

7.1.2 Faults Page

The **Faults** page provides access to the system fault log (see Figure 7-3), and fault history (Figure 7-4). The FAULT tab displays only currently raised faults, while the HISTORY tab displays all raised and cleared faults since the last system reboot.

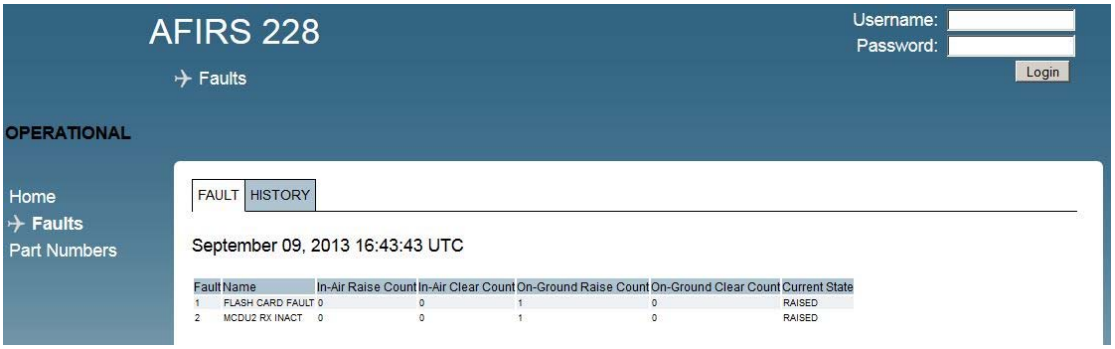

Figure 7-3 – Faults Page (Fault Log Tab)

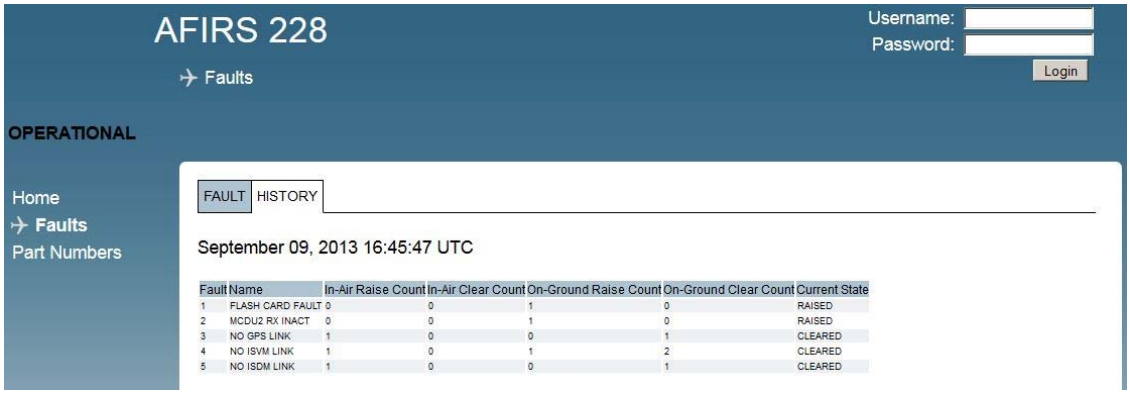

Figure 7-4 – Faults Page (Fault History Tab)

7.1.3 Part Numbers Page

The **Part Numbers** page provides the status of the software (Figure 7-5) and hardware configuration (Figure 7-6) of the Airbus Iridium SATCOM System.

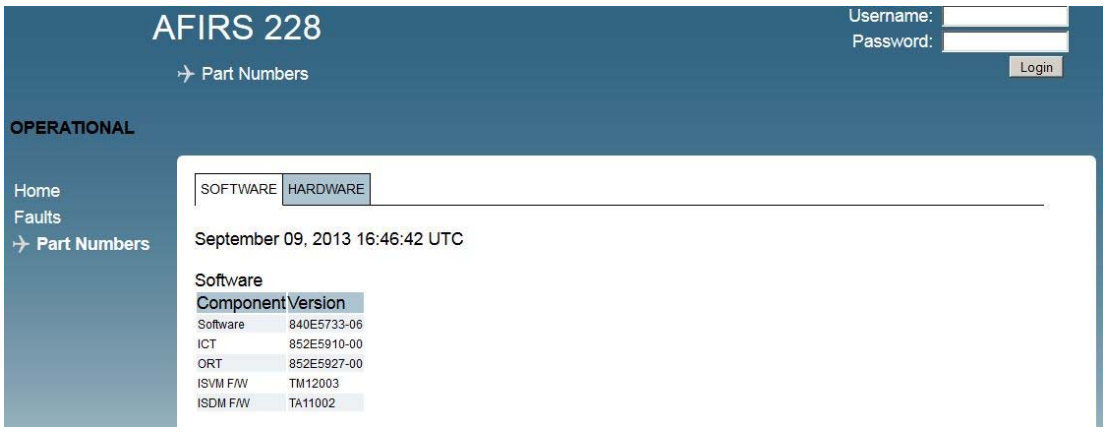

Figure 7-5 – Part Number Page (Software Tab)

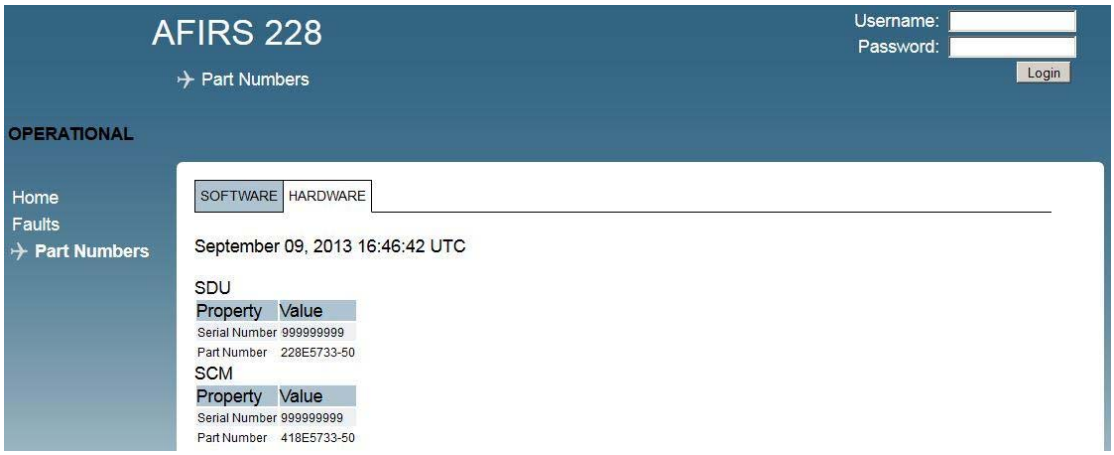

Figure 7-6 – Part Number Page (Hardware Tab)

7.2 Entering Maintenance Mode

In order to enter Maintenance Mode, the aircraft must be deemed 'On-Ground'. If the aircraft is deemed 'In-Air', the [Enter Maintenance Mode] button will be or will become unavailable.

If the aircraft status changes to 'In-Air' while in Maintenance Mode, the system will reboot automatically and return to Operational Mode.

Entering Maintenance Mode is granted to the following users after login with their assigned user name and password:

Maintenance User

Administrator User

Entering Maintenance Mode provides the Upgrades page to the Maintenance User and Administrator User. In addition, the Maintenance User is allowed to modify 5 parameters in the **ORT** page.

The Administrator User is allowed to modify parameters in the **UAT** page only.

Role based MUI permissions are provided in Table 7-1 through Table 7-3 at the end of this section.

To enter Maintenance Mode:

1. Once connected to the Airbus Iridium SATCOM System MUI, on the **Home** page, enter your user name and password, then click **Login**.
2. If the aircraft is deemed 'On-Ground', the [Enter Maintenance Mode] button is available at the top right corner of the screen. Click **Enter Maintenance Mode**.

   A message appears (see Figure 7-7) prompting for confirmation to enter Maintenance Mode.

Figure 7-7– Entering Maintenance Mode Message

3. To enter Maintenance Mode, click **OK**.

The **Home** screen appears as shown in Figure 7-8. The SYSTEM status indicates Yellow (blank).

Note:
Entering Maintenance Mode disables all MCDU functions.

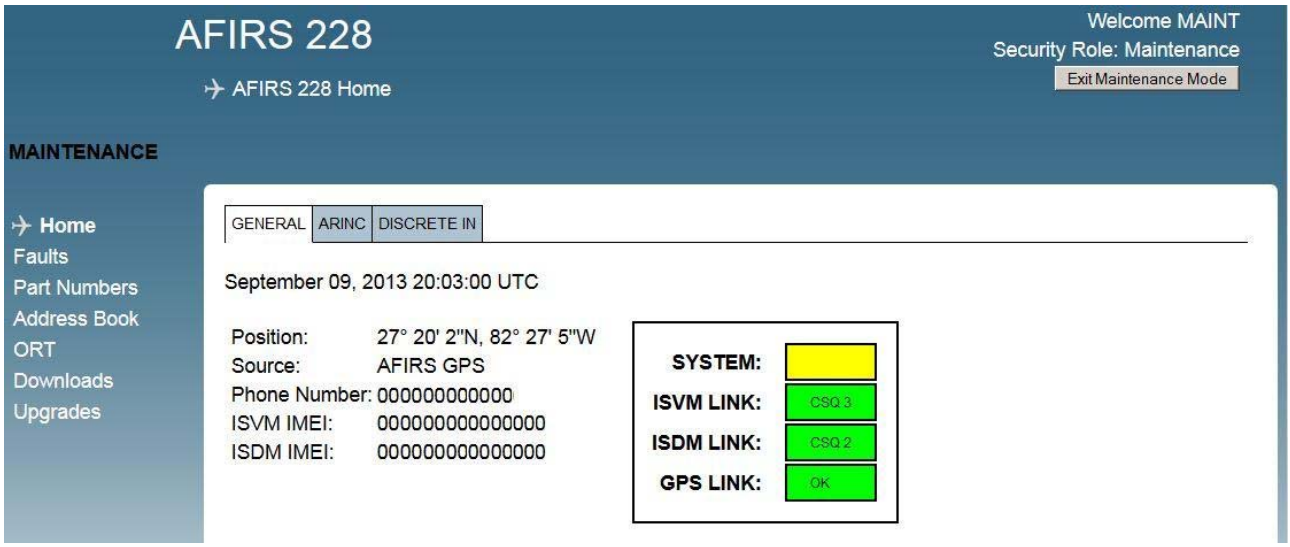

Figure 7-8 – Maintenance Mode Initial Display Screen

To exit Maintenance Mode:

Upon completion of uploading of data or software files or modifying parameters, click **Exit Maintenance Mode** for the changes to take effect – see Figure 7-9.

A dialog box will appear, asking you to confirm that you want to save changes. Click **OK**, then the system will restart, displaying the screen shown in Figure 7-10.

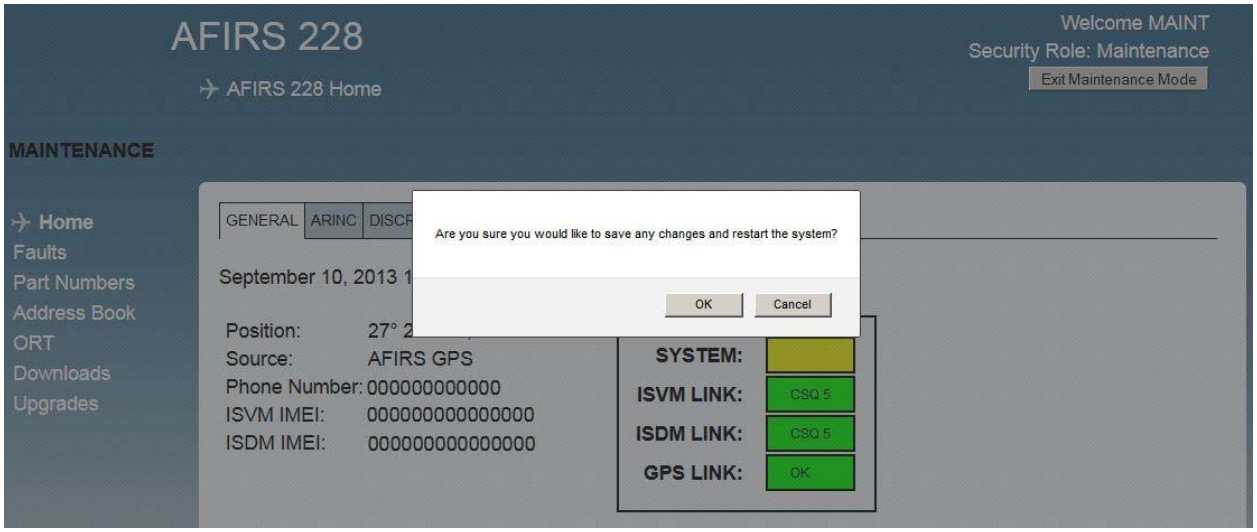

Figure 7-9 – Maintenance Mode Exit Screen

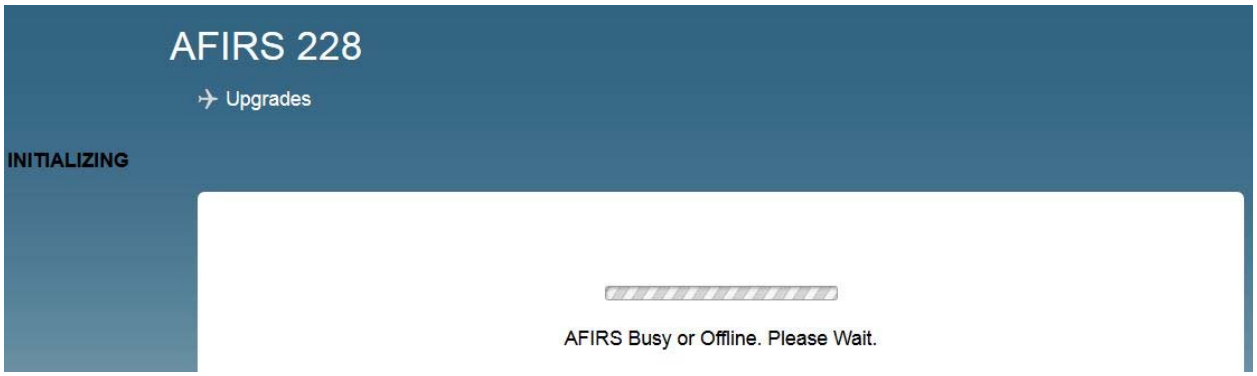

Figure 7-10 – System Restart Screen

Note:
Exiting Maintenance Mode enables all MCDU functions.

If the aircraft status changes to 'In-Air' while in Maintenance Mode, the system will reboot automatically and return to Operational Mode, disregarding incomplete file uploads.

The following sections describe the functionality of the additional menu items available in Maintenance Mode.

7.2.1 Maintenance Mode Menu Descriptions

Entering Maintenance Mode provides the **Upgrades** page to the Maintenance User and Administrator User.

1. Click **Upgrades** to upload software or data files. The screen shown in Figure 7-11 will be displayed.
2. Click **Browse** to navigate and select the software or data file to be uploaded.

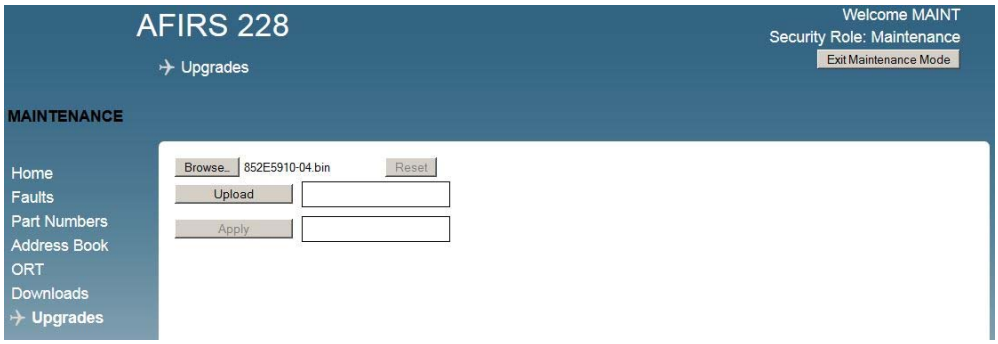

Figure 7-11 – Upgrades Screen

3. Click **Upload** to start the uploading process. Upon successful completion of the Upload step, the blue progress bars turn green. The uploaded data files display a CRC code, the uploaded software file displays the part number of the software. Non-compatible files will be rejected and an error message displays.
4. Click **Apply** to start the verification process. Upon successful completion of the verification step, the blue progress bars turn green. Non-compatible files will be rejected and an error message displays
5. Click **Reset** in order to upload another file.
6. For changes to take effect, the system must be rebooted. Click **Exit Maintenance Mode.**

Note:
If the aircraft status changes to 'In-Air' before the Upload process is c**omple**ted, the system will reboot automatically and return to Operational Mode, disregarding incomplete uploads.

7. **Maintenance User** can modify only 5 ORT parameters:
    a. Click **ORT** (Owner Requirements Table) to configure customized settings for specific aircraft and or operator requirements.
8. **Administrator User** can modify any UAT parameter:
    a. Click **UAT** (User Access Table) to configure user access privileges.

.

9. Click **Exit Maintenance Mode** for changes to take effect. The system reboots and returns to Operational Mode

Note:
If the aircraft status changes to 'In-Air' before the Upload process is completed, the system will reboot automatically and return to Operational Mode, disregarding incomplete uploads.

Table 7-1 - Read Privileges by Role

Roles	Read Privileges								
	Status and Part Numbers					Configurations			
	Status: Operating Mode, GPS Source, Configured Phone Number, ISVM IMEI, ISDM IMEI, Status LEDs (System, GPS, ISVM, ISDM)	ARINC 429 Rx Channels Status (Active/ Inactive)	Discrete Inputs Status (Active/ Inactive)	Fault Status	Part Numbers: ICT P/N, ORT P/N, ISVM F/W Ver., ISDM F/W Ver., S/W P/N, SDU P/N, SCM P/N, SCM S/N	ORT	ICT	ADB (Address Book)	UAT (User Access Table)
Guest (no login required)	**Yes**	**Yes**	**Yes**	**Yes**	**Yes**	No	No	No	No
Data Collector	**Yes**	**Yes**	**Yes**	**Yes**	**Yes**	No	No	No	No
Maintenance	**Yes**	**Yes**	**Yes**	**Yes**	**Yes**	**Yes (Limited)**	No	**Yes**	No
Administrator	**Yes**	**Yes**	**Yes**	**Yes**	**Yes**	No	No	**Yes**	**Yes**

Table 7-2 - Download Privileges by Role

Roles	Download Privileges								
	Logs					Configurations			
	Failures	In-Air Faults	On-Ground Faults	Status (Link Changes)	Debug	ICT	ORT	ADB (Address Book)	UAT (User Access Table)
Guest (no login required)	No	No	No	No	No	No	No	No	No
Data Collector	**Yes**	**Yes**	**Yes**	**Yes**	**Yes**	No	No	No	No
Maintenance	**Yes**	**Yes**	**Yes**	**Yes**	**Yes**	**Yes**	**Yes**	**Yes**	No
Administrator	**Yes**	**Yes**	**Yes**	**Yes**	**Yes**	No	No	No	**Yes**

Table 7-3 – Modify Privileges by Role

Roles	Modify Privileges								
	Modifications				Software/Data Loading (Upload)				
	ORT Parameters	ICT Parameters	Address Book	UAT (User Access Table)	S/W Upgrades	ICT	ORT (Complete)	ADB (Address Book)	UAT (User Access Table)
Guest (no login required)	No	No	No	No	No	No	No	No	No
Data Collector	No	No	No	No	No	No	No	No	No
Maintenance	**Yes (Limited)**	No	No	No	**Yes**	**Yes**	**Yes**	**Yes**	**Yes**
Administrator	No	No	No	**Yes**	**Yes**	**Yes**	**Yes**	**Yes**	**Yes**

7.3 Configuring the Airbus Iridium SATCOM System

This section provides basic information on how to configure the Airbus Iridium SATCOM System.

User access privileges are required to modify parameters as follows:

Maintenance User – 5 ORT parameters

Administrator User – UAT parameters

The above listed users are required to log in with a user name and password and enter Maintenance Mode.

Note: The aircraft status must be 'On-Ground' when Entering Maintenance Mode.

The following sections are intended to provide you with information on the configuration process and data inputs required to install and verify a system as operational: For the purposes of installation, system configuration and verification, the following steps should be completed:

1. **Address Book** to upload
2. **ORT** parameters for Maintenance User
3. **ICT** file to upload
4. **UAT** parameters for user roles

7.3.1 Address Book

The Address Book can be uploaded as a comma-separated-values file (adb.csv) by the Maintenance User or Administrator User after login with a user name and password, and Entering Maintenance Mode when the aircraft status 'On-Ground'.

The Address Book can be viewed in the MUI by the Maintenance User or Administrator User after login in Operational Mode. Up to 300 Address Book entries can be made.

Note: Address Book entries can be viewed and, if unprotected, modified via the MCDU in Operational Mode.

The Address Book can be downloaded as 'adb.csv' file in the MUI (including modifications that have been made via the MCDU) by the Maintenance User after login in Operational Mode.

The following restrictions and limitations apply to the parameters of a compatible adb.csv file:

- **Phone Number** – up to 18 digits
- **Name** – up to 23 alphanumeric characters; A-Z, 0-9, +, -, /, space
- **Priority** – 4 (Public), 3 (Non-Safety), 2 (Safety), 1 (Emergency)
- **Protected** – 0 (No), 1 (Yes)
- **Directory** - 4 (Public), 3 (Non-Safety), 2 (Safety), 1 (Emergency)
- **Speed Dial 1** - 1
- **Speed Dial 2** – 0 (currently not used)
- **Speed Dial 3** – 0 (currently not used)

To view the Address Book in the MUI:

1. In Operational Mode, log in as Maintenance User or Administrator User.
2. Click **Address Book** to display the Address Book entries (see Figure 7-12).

Order#	Phone Number	Contact Name	Default Call Priority	Directory	Protected	Extension 2 Speed Dial	Extension 3 Speed Dial
1	15551231234	A+B-C	NON-SAFETY	NON-SAFETY	NO		
2	123456789012345678	AAABBBCCCDDDEEEFFFGGGHH	NON-SAFETY	NON-SAFETY	YES		
3	001234567890123456	DDD.EEE/FFF GGG	SAFETY	SAFETY	NO		
4	011234567890	HHH III JJJ	SAFETY	SAFETY	YES		
5	098765432109876543	XYZ123	EMERGENCY	EMERGENCY	NO		
6	001122334455	ABC 123	EMERGENCY	EMERGENCY	YES		
7	123456	MMM 123 NNN	PUBLIC	PUBLIC	NO		
8	0123456789	OPQRST12345	PUBLIC	PUBLIC	YES		

Figure 7-12 – Address Book

3. View the Address Book entries in the MUI:

- **Order#**: Up to 300 address book entries.

  Note: This parameter is not part of the adb.csv file.
- **Phone Number:** From 6 to 18 digits
- **Contact Name:** Up to 23 alphanumeric characters
- **Default Call Priority and Directory:** Options displayed are Emergency, Safety, Non-Safety, and Public.
- **Protected: YES** indicates that the Address Book entry is 'protected' from being modified. **NO** indicates that the Address Book entry is 'not protected', and can be modified or deleted via the MCDU in Operational Mode.
- **Extension 2 and 3 Speed Dial**: Currently not used.

7.3.2 Owner Requirements Table (ORT) Parameters

The following user access privileges are required to modify ORT parameters:

Maintenance User – 5 ORT parameters

The Owner Requirements Table (ORT) for Maintenance User (see Figure 7-13) contains the parameters that may be customized by the individual aircraft operator. These settings may be changed as required to meet operational requirements or preferences.

The ORT file can be uploaded and downloaded as a binary file by the Maintenance User.

The file name of an up-loadable ORT file has a part number; for example, '852E5927-00.bin'. It is version-controlled and the CRC is calculated and displayed during the upload process for verification.

The default file name of a downloaded ORT file is 'ort.bin'.

Figure 7-13 – ORT Screen

Note:
An ORT Configuration Worksheet is provided in Appendix B to assist the operator in selecting and documenting the correct ORT configuration settings.

To access and modify ORT parameters:

1. **Log in** with user name and password as Maintenance User.
2. Click **Enter Maintenance Mode**.

Note:
The aircraft status must be 'On-Ground' to be able to Enter Maintenance Mode.

3. Click the **ORT** link on the left-hand side of the screen to open the ORT page.
4. **AIR TO GROUND CALLS - CALL PROGRESS TONES**: The call progress tones can be configured to either North American or European. The default is **NORTH AMERICAN.**
5. **ALLOW MANUAL DIALING** - **EXTENSION 1**: If set to **YES**, manually dialed phone calls can be placed from the cockpit, in addition to using the directory. If set to **NO**, phone calls from the cockpit can be placed only by using the directory.

Note:
If set to **NO**, the MANUAL DIAL prompt will not be available on the MCDU.

IMPORTANT! To obtain operational approval for safety-services voice in accordance with FAA AC20-150A, Extension 1 must be configured **YES** to allow manual dialing for the flight crew.

6. **OTHER CALL PARAMETERS – ALLOW LOW PRIORITY CALLS IN COCKPIT**: Low-priority calls are considered PUBLIC or Priority 4. If set to **YES**, low-priority calls can be received in the cockpit, and low-priority calls can be placed from the cockpit. If set to **NO**, low-priority incoming calls will not ring in the cockpit, and no low-priority calls can be placed from the cockpit.

Note:
If set to **NO**, the PUBLIC directory prompt will not be available on the MCDU.

7. **SAFETY SERVICES (Airbus Iridium SATCOM System) – ADDITIONAL ACARS HEADER PARAMETER**: The default configuration of **NONE** corresponds to SITA; alternatively, select **ARINC**.

8. **ATS ENABLED**: If set to **YES**, the Iridium SIM card installed in the SCM must be ATS-enabled. If set to **NO**, the Iridium SIM card installed in the SCM is not ATS-enabled.

7.3.3 Installation Configuration Table (ICT)

The Installation Configuration Table (ICT) parameters may not be viewed or modified.

The ICT file can be uploaded and downloaded as a binary file by the Maintenance User.

The file name of an uploadable ICT file has a part number; for example, ‘852E5910-00.bin’. It is version-controlled and the CRC is calculated and displayed during the upload process for verification.

The default file name of a downloaded ICT file is ‘ict.bin’.

7.3.4 User Access Table (UAT) Parameters

The following user access privileges are required to modify UAT parameters:

Administrator User

The User Access Table (UAT), shown in Figure 7-14, is used by the Administrator User to set up user access privileges for up to 20 users. These settings may be changed as required to meet operational requirements.

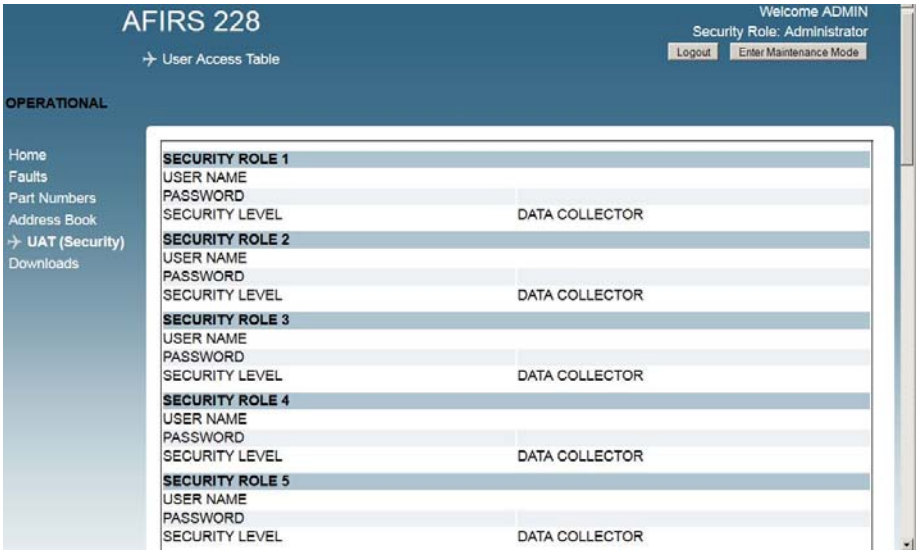

Figure 7-14 – UAT Page

To access and modify UAT parameters:

1. **Log in** with user name and password as Administrator User
2. Click **Enter Maintenance Mode**.

Note:
The aircraft status must be “On-Ground” to be able to Enter Maintenance Mode.

3. Click the **UAT (Security)** link on the left-hand side of the screen to open the UAT page.
4. **USER NAME**: From 4 to 20 upper-case alphanumeric characters
5. **PASSWORD**: From 4 to 20 upper-case alphanumeric characters
6. **SECURITY LEVEL**: Select either **DATA COLLECTOR** (default) or **MAINTENANCE** or **ADMINISTRATOR**.

Up to 20 Users can be configured.

To exit Maintenance Mode:

Upon completion of modifying parameters, click **Exit Maintenance Mode** for the system to reboot and the changes to take effect.

Note:
Exiting Maintenance Mode enables all MCDU functions.

If the aircraft status changes to ‘In-Air’ while in Maintenance Mode, the system will reboot automatically and return to Operational Mode.

7.4 Upgrading Airbus Iridium SATCOM System Software

The Airbus Iridium SATCOM System software is field-upgradeable using the **Upgrade** function of the MUI in Maintenance Mode.

One of the following user privileges is required to login and enter Maintenance Mode to upload software and data files:

- Maintenance User
- Administrator User

Note:
The aircraft status must be 'On-Ground' to enter Maintenance Mode.

7.4.1 Upgrade Materials

Make sure you have the following materials available before beginning the upgrade procedure.

- A notebook computer with an Ethernet port, running the Microsoft Windows operating system and a web browser such as Internet Explorer (see Section 7.1 Accessing the Maintenance Port).
- A standard, straight-through Ethernet patch cable.
- The software release folder that contains the upgrade file (upgrade.tgz).
- The software release notes to identify any changes to functionality or special upload instructions.

7.4.2 Upgrade Procedure

Before beginning the upload procedure, make sure you have saved the applicable software release folder that includes the upgrade.tgz file to an accessible location on your laptop. Make sure you review the software release notes for any special instructions that may apply.

To upgrade the Airbus Iridium SATCOM System Software:

1. From the left-hand menu, click **Upgrades**.

   The **Upgrades** screen displays.
2. Click **Browse** to locate the software file to upload (upgrade.tgz).
3. Once you have selected the software file you want to upload, click **Upload** to start the upload process.

   Blue progress bars indicate the file uploading status. When the upload is complete and successful, the progress bars turn green, and the new Software Part Numbers of the new software image will be displayed (see Figure 7-15).

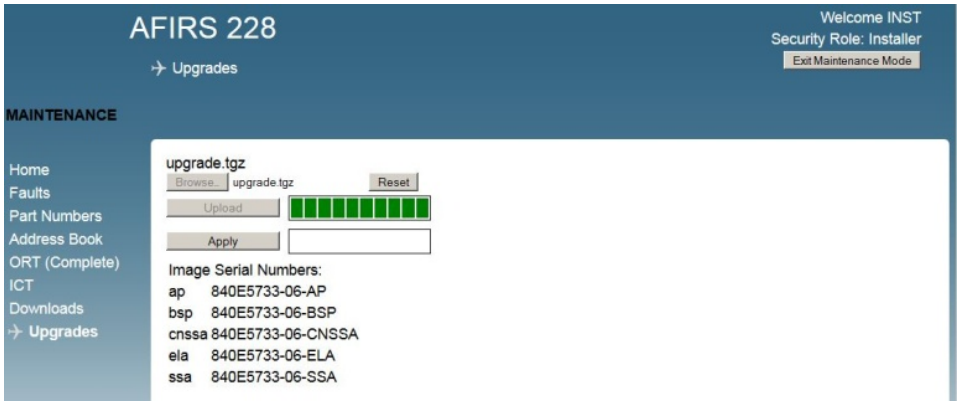

Figure 7-15 – Software Upgrade Progress

Note:
Incompatible files will be rejected. The progress bars turn red, and an error message displays next to the progress bars. Click **Reset** to restart the upgrade process.

If you uploaded an incorrect file, but have not yet clicked **Apply**, click **Reset** to restart the *upgrade process.*

4. Click **Apply** to verify and load the software into non-volatile memory.

   Blue progress bars indicate the status of the software file being installed on the SDU. When the software verification is completed successfully, the progress bars turn green, and the message displays that the system must be restarted for the changes to take effect (see Figure 7-16).

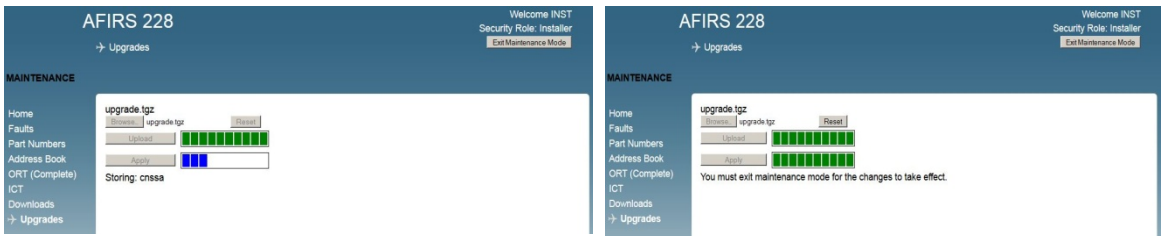

Figure 7-16 – Software Loading Progress Screens

Note:
If the aircraft status changes to 'In-Air' at any time during the Upgrade process, the system will reboot automatically and return to Operational Mode, disregarding any incomplete upgrades.

To activate the newly installed software, you must **Exit Maintenance Mode** and restart the SDU.

5. To exit Maintenance mode, click **Exit Maintenance Mode** at the top-right corner of the MUI screen,

   A confirmation message displays prompting to confirm that you want to exit Maintenance Mode (see Figure 7-17).

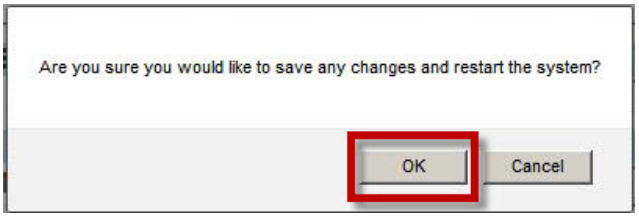

Figure 7-17 – Exit Maintenance Mode Message

6. Click **OK.**

   The SDU automatically restarts and applies the newly installed software. A message displays indicating that the AFIRS system reboots (see Figure 7-18).

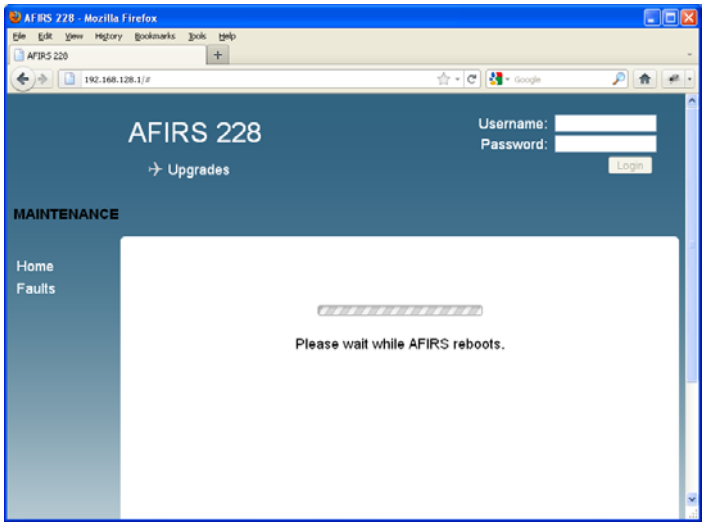

Figure 7-18 – Exit Maintenance Mode Progress Bar

7. When the restart is complete, verify that the SDU is in Operational Mode and functioning as expected. To verify that the correct software version and configurations have been loaded, check the following:

   a. From the **Home** page, click on the **General**, **ARINC**, and **Discrete In** tabs to review the system and link status, and the status of the ARINC 429 Rx and Discrete In connections.

   b. Click on the **Faults** page to view if any faults are currently raised.

   c. Click on the **Part Numbers** page to verify that the software part number displayed matches the software version and part number as noted in the release notes or upgrade instructions

   d. Enter User Name and Password (Maintenance User) and click **Login**.

   e. Maintenance User - Click **ORT** and review the ORT configurations to confirm that they are correct.

   f. Click **Logout** after your review is complete and satisfactory.

7.5 Exiting Maintenance Mode

To save changes and uploaded configuration data, you need to exit maintenance mode for the changes to take effect

1. In the top-right hand corner of the screen, click **Exit Maintenance Mode.**
2. A Message displays prompting for confirmation to exit Maintenance Mode (see Figure 7-19).

Note:

If you click **Cancel**, your changes are still active but not saved.

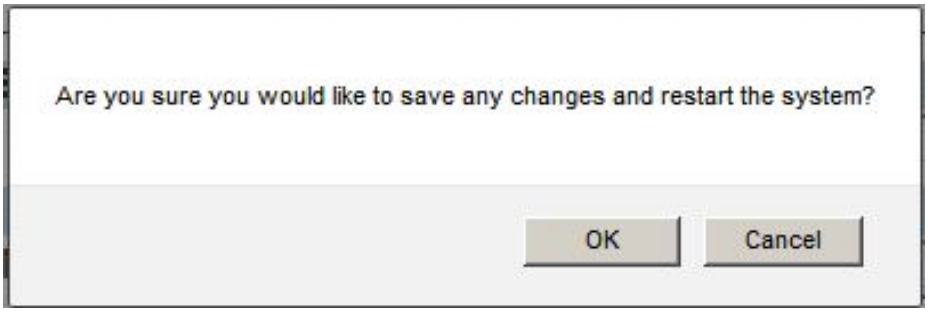

Figure 7-19 – Exiting Prompt Message

3. Click **OK** to exit Maintenance Mode, save your changes and reboot the system.
4. The following message displays (see Figure 7-20):

Figure 7-20 – Restart Screen

5. Once the system reboots to Operational Mode, verify your changes and confirm that the correct software and data files have been installed.
6. Click the **Part Numbers** page and review the Software tab for the correct Part Numbers
7. The **Part Numbers** screen displays as shown in Figure 7-21.

Figure 7-21 – Software Part Numbers Screen

8. MAINTENANCE AND CHECKOUT

This section provides instructions on post-installation checkout procedures and information on Instructions for Continued Airworthiness.

8.1 Post-Installation Checkout

8.1.1 Before Power-On Tests

1. Before installing the SDU in the mounting tray, confirm that all aircraft interface wiring is correct as per the aircraft wiring integration design.
2. Confirm that a valid SIM card is installed in the SDU Configuration Module (SCM).
3. Set the system circuit breaker for the Main power source and confirm that 28 VDC power is available between pins J1C-2 and J1C-3. Pull the circuit breaker and ensure that Main power is removed.
4. Place the SDU in the mounting tray and secure the front hold-down.
5. Open the front panel door and confirm that a flash card is installed in the SDU.

Note:
If no flash card is present, a FLASH CARD FAULT is generated in the MUI, and an SDU FAIL will display on the MCDU SATCOM BITE STATUS page. Only FLYHT P/N 502-1180-x flash cards should be used in the Airbus Iridium SATCOM System.

6. If installed, the cockpit FAULT indication should be illuminated when power is not applied to the system.
7. Set the system circuit breaker for the Main power source. The SYSTEM LED indicator on the front panel of the SDU will be amber indicating that the system is initializing.

Note:
The first time an SDU is installed in an aircraft, the SYSTEM LED indicator will typically remain amber even after it has initialized. The MUI will display an SCM Configuration Fault indicating that the proper configuration settings have not yet been made.

8. Connect an Ethernet cable to the Maintenance Port in the front panel and follow procedures to open the Maintenance User Interface (MUI) as described in Section 7.
9. Log in to the MUI as Maintenance User and Enter Maintenance Mode to install ICT and ORT files in accordance with the procedures contained in Section 7. Exit Maintenance Mode to reboot the system. Keep the laptop connected to the Maintenance Port after finishing the configuration procedure.
10. Once the system resets, the SYSTEM LED indicator on the front panel of the SDU will turn green once the system is operational.
11. The cockpit FAULT annunciator should remain illuminated whenever the SYSTEM STATUS indicator is amber, and extinguish when the SYSTEM LED indicator turns green.

8.1.2 Aircraft Systems Interface Tests

Note:
The tests listed in this section are generic in nature and are not intended to be used as a test plan for any specific aircraft installation. They should only be used by the aircraft systems integrator as a guide in developing the correct and complete aircraft-specific integration tests. The aircraft systems integrator's test plan should ensure that the aircraft and its systems are in a safe condition for each test to be performed.

8.1.2.1 Main Power Test

1. Confirm that 28 VDC power is available at the Main power input, and that the Airbus Iridium SATCOM System is initialized and operating.
2. Using the MUI Home page General tab, confirm that the System status and Datalinks are green.

8.1.2.2 ARINC 429 Databus Interface Tests

1. On the MUI, click on the ARINC tab on the Home page.
2. Confirm the aircraft systems connected to the databus ports being tested are operational and transmitting on the databus.
3. Confirm that the ARINC 429 Rx (1-16) channels used are shown as ACTIVE.

8.1.2.3 MCDU Tests

Confirm SATCOM functionality on each MCDU as follows:

1. On the MCDU MENU page, the <SAT prompt should be available at one of the Line Select Keys (LSKs). Press the LSK to display the SATCOM MAIN MENU page.
2. On the SATCOM MAIN MENU, press the LSK for the SATCOM STATUS page. The SATCOM STATUS page should be displayed with log-on state as well as voice and datalink status information.
3. On the SATCOM STATUS page, press the LSK of the CONFIG prompt. The SATCOM CONFIG page 1 of 7 should be displayed. Press Arrow Down or Arrow Up to view current configurations on pages 1 through 7.
4. On the SATCOM STATUS page, press the LSK of the BITE prompt to display the SATCOM BITE STATUS page to display the status of the SDU, SIM CARDS, and SCM.
5. On the SATCOM BITE STATUS page, press the LSK of the SYS BUS prompt. The SATCOM SYS BUS page should display with status information of the CFDS, MCDU#1, MCDU#2, MCDU#3, ATSU#1, ATSU#2, and EFB.
6. Press the <RETURN LSK several times to return to the SATCOM MAIN MENU page.

8.1.2.4 Ethernet Port Tests

Confirm Ethernet connectivity to each Ethernet device as follows:

Confirm that the SDU front panel ETHERNET LEDs for the connected ports are green. Flashing green indicates data is being transferred.

Perform any tests specific to the connected system to confirm that it is communicating with the SDU over the Ethernet port.

8.1.2.5 Discrete Input Tests

For each discrete input connected (1-16), confirm the correct aircraft system interface as follows:

1. Using the Maintenance User Interface (MUI), click on the Discrete In tab on the Home page.
2. Select the discrete input to its inactive state. Confirm proper operation of the interfaced aircraft system.
3. Select the discrete input to its active state. Confirm proper operation of the interfaced aircraft system.

8.1.2.6 Discrete Output Tests

For each discrete output configured and connected (1-8), confirm the correct state is detected as follows:

1. Manipulate the system providing the discrete output as required to indicate the output active state

8.1.3 Operational System Tests

Note:
The tests in this section require the aircraft to be powered and outside the hangar in a location that has a clear view of the Iridium and GPS satellites. Aircraft systems that interface with the Airbus Iridium SATCOM System must be installed and operational.

These tests also require the AFIRS system activated on the Iridium network by FLYHT, and a valid SIM card installed in the SCM. Ensure that the ORT configuration ATS Enabled (Yes/No) matches the SIM card type installed.

8.1.3.1 Date, Time, and Position Tests

1. Open the MUI to display the AFIRS Home page.
2. Confirm that the correct date, time, and position (UTC) information is displayed.
3. If the Internal GPS is configured as Active, the MUI display is showing AFIRS GPS and the GPS Link is displayed green.

8.1.3.2 Datalink Tests

1. Confirm on the MUI that the ISVM and ISDM Links are green, and the MCDU SATCOM STATUS page displays LOGGED-ON.

8.1.3.3 SATCOM Voice Tests

1. Confirm that the MCDU SATCOM MAIN MENU page displays Ready to Connect.
2. Place an air-to-ground call by using the MCDU. Confirm proper MCDU indications for a call in progress.
3. Terminate the call from the cockpit. Confirm proper cockpit indications and return to Ready to Connect state.
4. Place a ground-to-air call. Confirm proper cockpit indications for an incoming call. Answer the call and confirm proper cockpit indications for a call in progress.
5. Place a ground-to-air call and reject the incoming call. Confirm proper cockpit indications.
6. Place a ground-to-air call. Allow call to go unanswered. Confirm proper ring sequencing, eventual call termination, and proper cockpit indications.
7. If SIM card installed is ATS-enabled, place a ground-to-air call. While the call is in progress, place a higher priority ground-to-air call. Confirm that the existing call is terminated and preempted by a call of higher priority.
8. Terminate call at from the ground. Confirm proper cockpit indications.

8.1.4 EMI Tests

Each Airbus Iridium SATCOM System aircraft installation should be tested for electromagnetic interference in accordance with procedures developed by the aircraft systems integrator. The tests should be developed to ensure that there is no objectionable interference between the Airbus Iridium SATCOM System and other aircraft systems. This can include ground tests with engine running and flight tests as required.

8.2 Instructions for Continued Airworthiness

The aircraft systems integrator is responsible to provide Instructions for Continued Airworthiness (ICA) for the Airbus Iridium SATCOM System specific to the aircraft installation. The general content in this Installation Manual may be referenced by the aircraft systems integrator when developing the ICA.

Appendix A – Wiring Diagram (follows on next 3 pages)

Airbus Iridium SATCOM System

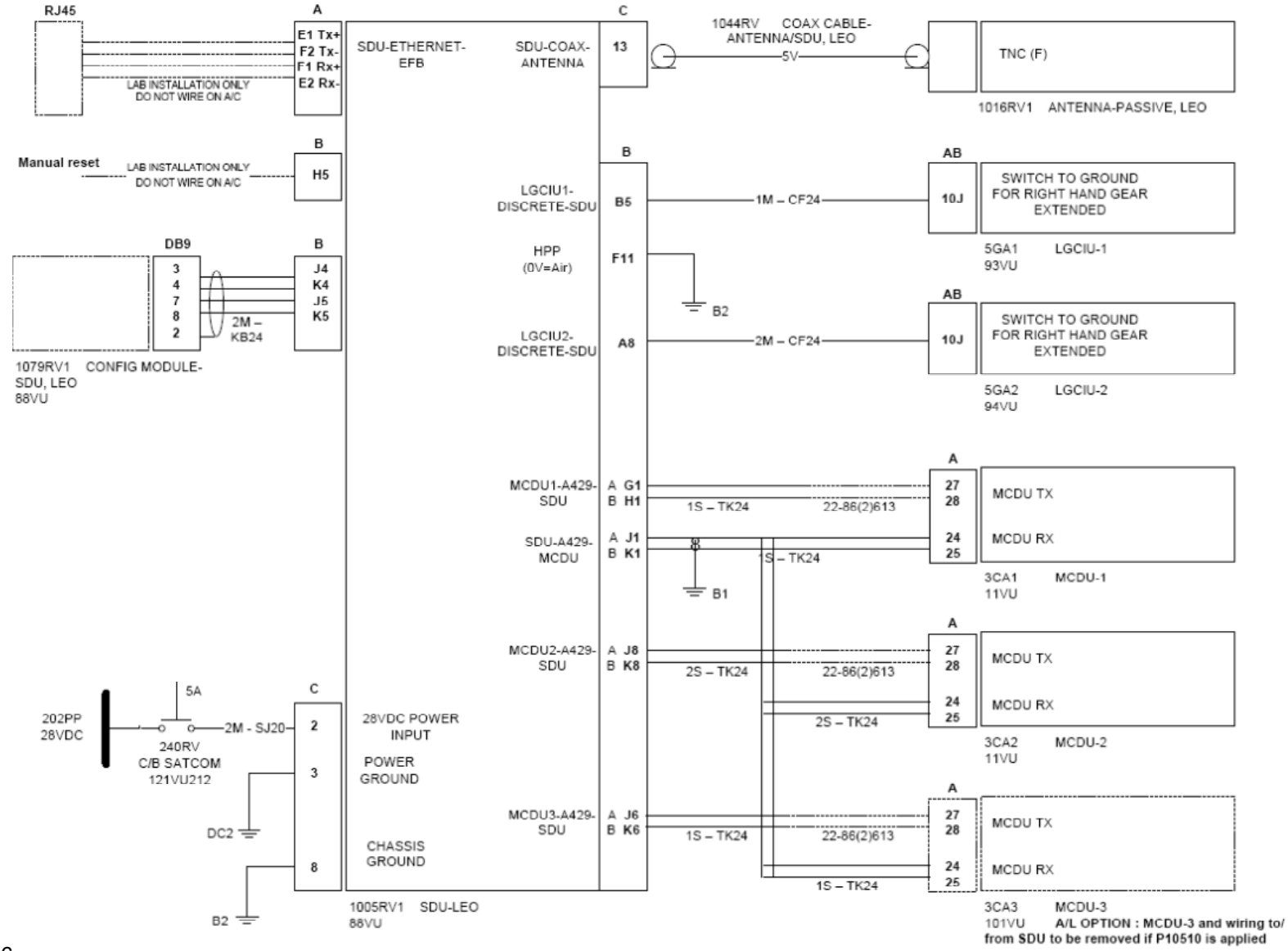

Airbus Iridium SATCOM System

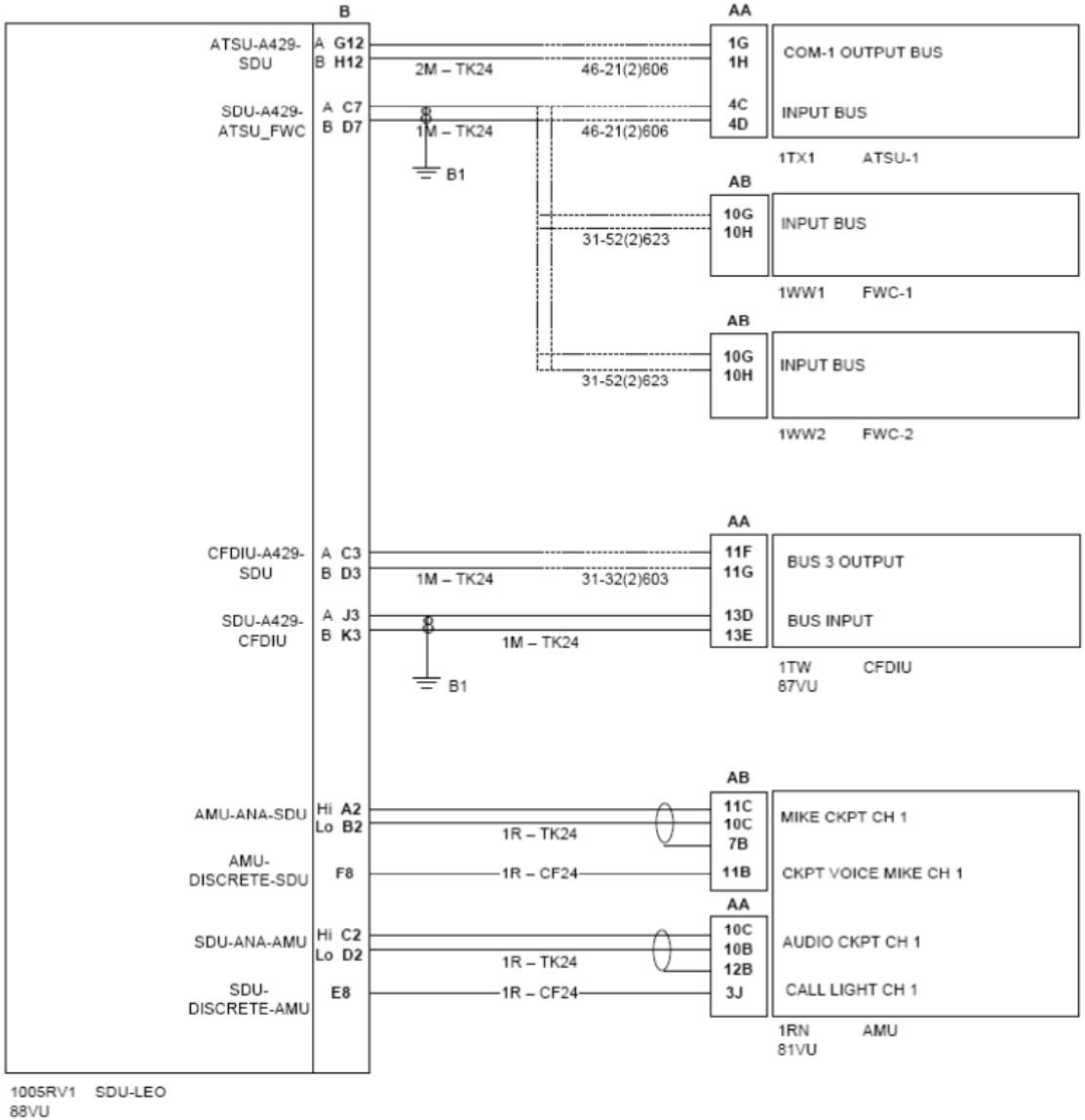

Airbus Iridium SATCOM System

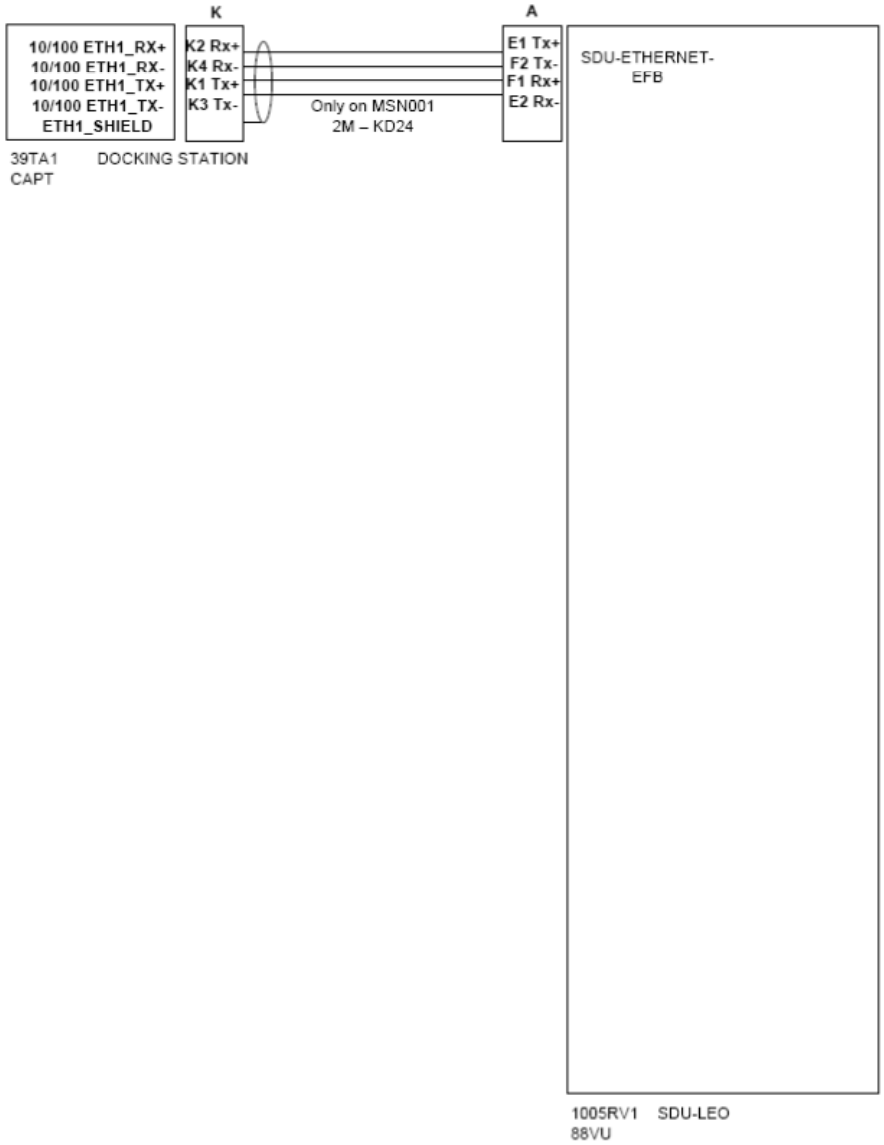

Appendix B – ORT Worksheet

ORT Group	ORT Parameter Name	Value
Air to Ground Calls	Call Progress Tones	☐ NORTH AMERICAN ☐ EUROPEAN
Allow Manual Dialing	Extension 1	☐ YES ☐ NO
Other Call Parameters	Allow Low Priority Calls in Cockpit	☐ YES ☐ NO
Safety Services (Airbus Iridium SATCOM System)	Additional ACARS Header Parameter	☐ NONE ☐ ARINC
	ATS Enabled	☐ YES ☐ NO

THIS PAGE INTENTIONALLY LEFT BLANK

Appendix C – Environmental Qualification Forms

The following forms are provided for the Airbus Iridium SATCOM System SDU and Airbus Iridium SATCOM System SCM, and Airbus Iridium Antenna System respectively.

RTCA DO-160G Environmental Qualification Form

Model: AFIRS 228S	**Product:** Satellite Data Unit and Satellite Control Module
Part Number: 228E5733-00 418E5733-00	**Manufacturer:** L-3 Communications, Aviation Recorders 100 Cattlemen Road, Sarasota FL, 34232 P.O. Box 3041, Zip Code 34230-3041
TSO Number:	**Manufacturer's Specification and/or Other Applicable Specifications:** Aviation Recorders QTP #905-E5750-34 Airbus Purchaser Technical Specification, X2328SP1010161 Airbus ABD0100.1.2 Airbus ABD0100.1.6 Airbus ABD0100.1.8 RTCA DO-160G

Conditions	TEST STANDARD	Description of Conducted Tests
Temperature & Altitude	DO-160G,IAW ABD100.1.2 G	Equipment tested to Category A2
Low Temperature		
Ground Survival	4.5.1	-55°C
Start-up after ground soak	4.5.1	-40°C
Operating	4.5.2	-15°C
High Temperature		+85°C
Ground Survival	4.5.3	+70°C
Start-up after ground soak	4.5.3	+70°C
Operating	4.5.4	

Conditions	TEST STANDARD	Description of Conducted Tests
Altitude	4.6.1	+15,000 feet
Decompression	4.6.2	+8,000 feet +50,000 feet
Overpressure	4.6.3	Equipment tested at 183 kPa and 199 kPa (Absolute Pressure)
Temperature Variation	DO-160G, Section 5 IAW ABD100.1.2 G	Equipment tested to Category B.
Humidity	DO-160G, Section 6.0 IAW ABD100.1.2 G	Equipment tested to Category A (Standard).
Operational Shocks	DO-160G Section 7.0, IAW ABD100.1.2 G	Equipment tested to Category D. 6g, 20 milliseconds (low freq.)
Vibration	DO-160G Section 8 Section 8.5.2 IAW ABD1001.2.G DO-160G Section 8.7.2 X20RP09234 18	Equipment tested to Section 1.6.1, Curve 1 Equipment tested to Cat H (Curve R) Equipment tested to specification (Windmilling)
Waterproofness	DO-160G Section 10.3.1 IAW ABD100.1.2 G Section 1.8	Equipment tested to Category Y. Condensing water proof test.

Conditions	TEST STANDARD	Description of Conducted Tests
Fluids Susceptibility	DO-160G Section 11.4.1 IAW ABD100.1.6 D Sections 4.7 and 4.8	Equipment tested to Category F, for: • Cleaning Agents • Disinfectants • Extinguishing Agents • Insecticides • Heat Transfer Fluids • Hydraulic Fluid
Dust	DO-160G Section 12.4, IAW ABD100.1.2 G Section 1.10	Equipment qualified to Category D
Fungus Resistance	DO-160G Section 13.0 and IAW ABD100.1.2 G Section 1.11	Equipment qualified to Category F
Magnetic Effect	DO-160G Section 15.0 IAW ABD100.1.2 G Section 3.4.1	Equipment tested to Category A.
Power Input	DO-160G Section 16.0, IAW ABD100.1.8 Issue E	Equipment tested in accordance with ABD0100.1.8 for 28VDC equipment. Note: Low voltage +20V-DC deviating from requirement of 18.5V-DC
Voltage Spike	DO-160G Section 17.0 IAW ABD100.1.8 Issue E	Category A Equipment tested in accordance with ABD0100.1.8.1, LDC 104.
Audio Frequency Susceptibility	DO-160G Section 18.0 IAW ABD100.1.8 Issue E	Equipment tested to Category R for DC

Conditions	TEST STANDARD	Description of Conducted Tests
Induced Signal Susceptibility	DO-160G Section 19.0 IAW ABD100.1.2 G Section 3.4.4	Equipment tested to Category ZW.
Magnetic Fields	19.3.1	Equipment
Magnetic Fields	19.3.3	Cables
Electric Fields	19.3.4	Cables
Spikes	19.3.5	Cables
Electrostatic Discharge	IAW ABD100.1.2 G Section 3.5	Equipment tested Category B
Flammability/Smoke/Toxicity	DO-160G ABD0031	Analysis for Flammability Analysis for Smoke & Toxicity
Constant Acceleration	ABD100.1.2 G Section 1.18,	Equipment tested to Category B and Test Procedure to ISO2669
Bench Handling	IAW ABD100.1.2 G Section 1.5.3 and MIL-STD 810 Method 516.5	Equipment tested to Procedure VI.

Aviation Recorders
L-3 Aviation Recorders
100 Cattlemen Road
Sarasota, FL 34232
Telephone: 1-941-371-0811
Fax: 1-941-377-5591
E-mail support: DLAR-aviationproducts@L-3com.com
Website: http://www.L-3ar.com

Aviation Recorders

COMPONENT MAINTENANCE MANUAL
AIRBUS IRIDIUM SATCOM SYSTEM

AIRBUS IRIDIUM SATCOM SYSTEM

IRIDIUM SATCOM SYSTEM
PART NUMBERS

SDU - 228E5733-00
SCM - 418E5733-00

COMPONENT MAINTENANCE MANUAL
WITH
ILLUSTRATED PARTS LIST
P/N: 165E5733-10

IN ACCORDANCE WITH
TSO C-159a

VENDOR CODE: 06141

23-28-01
Revision 1
Jan. 21/14

EXPORT CONTROL STATEMENT IRIDIUM SATCOM TECHNOLOGY / DATA:

"This Iridium SATCOM System Technical Data is being exported from the United States in accordance with the Export Administration Regulations (ECCN #7A994), No License Required (NLR). Diversion contrary to U.S. law is prohibited. In accordance with U.S. Law (Title 15CFR Part 746 and Supplement No. 1 to Part 774; and Title 31CFR) resale/re-export or transfer to certain designated countries is prohibited without the prior written consent of the U.S. Department of Commerce."

HTSUS/Schedule B: 85439.09.000

This manual contains date sensitive information. To verify the latest revision level of this manual check the Publications Index located on the L-3Com Publications down-load site at http://www.L3ar.net.

©Copyright 2013 by L-3 Communications.

All rights reserved. No part of this manual may be reproduced or utilized in any form or by any means, electronic or mechanical, including photocopying, recording, or by information storage and retrieval system, without permission in writing.

Inquiries should be addressed to:

L-3 Communications,
Aviation Recorders Publications
Vendor Code: 06141
P. O. Box 3041 Sarasota, Florida 34230
Phone: (941) 371-0811;
FAX: (941) 377-5591

GENERAL

This product and related documentation must be reviewed for familiarization with safety markings and instructions before operation.

This instrument was constructed in an ESD (electro–static discharge) protected environment. This is be cause most of the semiconductor devices used in this instrument are susceptible to damage by static dis charge.

Depending on the magnitude of the charge, device substrates can be punctured or destroyed by contact or mere proximity of a static charge. The results can cause degradation of device performance, early failure, or immediate destruction.

These charges are generated in numerous ways such as simple contact, separation of materials, and nor mal motions of persons working with static sensitive devices.

When handling or servicing equipment containing static sensitive devices, adequate precautions must be taken to prevent device damage or destruction.

Only those who are thoroughly familiar with industry accepted techniques for handling static sensitive de vices should attempt to service circuitry with these devices.

In all instances, measures must be taken to prevent static charge build–up on work surfaces and persons handling the devices.

BEFORE APPLYING POWER

Verify that the product is set to match the available line voltage and the correct fuse is installed.

Servicing instructions are for use by service–trained personnel only. To avoid dangerous electric shock, do not perform any servicing unless qualified to do so.

Adjustments described in the manual are performed with power supplied to the instrument while protective covers are removed. Energy available at many points may, if contacted, result in personal injury.

THIS PAGE IS INTENTIONALLY LEFT BLANK

SERVICE BULLETIN LIST

SERVICE BULLETIN	DATE	EFFECTIVITY	DESCRIPTION

THIS PAGE IS INTENTIONALLY LEFT BLANK

RECORD OF CHANGES

Issue	Revision	Date of Change	Comments
Initial	00	Dec. 15/13	Initial issue of AB Iridium SATACOM CMM. Includes all sections, per ATA100.
	1	Jan. 21/14	Corrected part numbers.

THIS PAGE IS INTENTIONALLY LEFT BLANK

RECORD OF REVISIONS

REV. NO.	INSERTION DATE	BY	REV. NO.	INSERTION DATE	BY	REV. NO	INSERTION DATE	BY
-								

THIS PAGE IS INTENTIONALLY LEFT BLANK

LIST OF EFFECTIVE PAGES

Section	Page	Date
Title Page		
	i	Jan. 21/14
	ii	Jan. 21/14
	iii	Jan. 21/14
	iv	Jan. 21/14
Service Bulletin List		
	v	Jan. 21/14
	vi	Jan. 21/14
Record of Changes		
	vii	Jan. 21/14
	viii	Jan. 21/14
Record of Revisions		
	ix	Jan. 21/14
	x	Jan. 21/14
List of Effective Pages		
	xi	Jan. 21/14
	xii	Jan. 21/14
Table of Contents		
	xiii	Jan. 21/14
	xiv	Jan. 21/14
	xv	Jan. 21/14
	xvi	Jan. 21/14

Section	Page	Date
Introduction		
	1	Jan. 21/14
	2	Jan. 21/14
	3	Jan. 21/14
	4	Jan. 21/14
	5	Jan. 21/14
	6	Jan. 21/14
	7	Jan. 21/14
	8	Jan. 21/14
Description and Operation		
	1	Jan. 21/14
	2	Jan. 21/14
	3	Jan. 21/14
	4	Jan. 21/14
	5	Jan. 21/14
	6	Jan. 21/14
Testing and Troubleshooting		
	101	Jan. 21/14
	102	Jan. 21/14
Disassembly		
	301	Jan. 21/14
	302	Jan. 21/14
Cleaning		
	401	Jan. 21/14
	402	Jan. 21/14
Check		
	501	Jan. 21/14
	502	Jan. 21/14

LIST OF EFFECTIVE PAGES

Section	Page	Date
Repair		
	601	Jan. 21/14
	602	Jan. 21/14
Assembly		
	701	Jan. 21/14
	702	Jan. 21/14
Fits and Clearances		
	801	Jan. 21/14
	802	Jan. 21/14
	803	Jan. 21/14
	804	Jan. 21/14
	805	Jan. 21/14
	806	Jan. 21/14
	807	Jan. 21/14
	808	Jan. 21/14
Special Tools, Fixtures and Equipment		
	901	Jan. 21/14
	902	Jan. 21/14
Illustrated Parts List		
	1001	Jan. 21/14
	1002	Jan. 21/14

TABLE OF CONTENTS

INTRODUCTION

SUBJECT/DESCRIPTION PAGE

1. GENERAL 1
2. ACRONYMS AND ABBREVIATIONS 1
3. DOCUMENT REQUIREMENTS 4
   A. REQUIRED DOCUMENTS 4
   B. REFERENCE DOCUMENTS 5
4. MAINTENANCE PHILOSOPHY 6
5. COMPONENT MAINTENANCE MANUAL (CMM) DESCRIPTION 7
   A. FRONT MATTER 7
   B. DESCRIPTION AND OPERATION 7
   C. TESTING AND TROUBLESHOOTING 7
   D. DISASSEMBLY 7
   E. CLEANING 7
   F. CHECK 7
   G. REPAIR 7
   H. ASSEMBLY 8
   I. FITS AND CLEARANCES 8
   J. SPECIAL TOOLS, FIXTURES AND EQUIPMENT 8
   K. ILLUSTRATED PARTS LIST 8
6. DOCUMENT VERIFICATION 8

DESCRIPTION AND OPERATION

1. SYSTEM OVERVIEW 1
2. SYSTEM ARCHITECTURE 3
   A. SATELLITE DATA UNIT (SDU) 3
   B. SDU CONFIGURATION MODULE (SCM) 4
   C. IRIDIUM ANTENNA SYSTEM 5

TESTING AND TROUBLESHOOTING

1. GENERAL 101

DISASSEMBLY

SUBJECT/DESCRIPTION PAGE

1. GENERAL 301

CLEANING

1. GENERAL.....401

CHECK

1. GENERAL.....501

REPAIR

1. GENERAL.....601

ASSEMBLY

1. GENERAL.....701

FITS AND CLEARANCES

SUBJECT/DESCRIPTION PAGE

1. GENERAL.....801
2. EQUIPMENT SPECIFICATIONS.....801
   A. SATELLITE DATA UNIT (SDU).....801
   B. SDU CONFIGURATION MODULE (SCM).....803
   C. IRIDIUM ANTENNA SYSTEM.....804
   D. COAXIAL ANTENNA CABLE ASSEMBLY.....806

SPECIAL TOOLS, FIXTURES AND EQUIPMENT

1. GENERAL.....901

ILLUSTRATED PARTS LIST

1. GENERAL.....1001

LIST OF FIGURES

FIGURE TITLE **PAGE**

Figure 1. Airbus Iridium SATCOM System Operational Concept 1
Figure 2. Airbus Iridium SATCOM System Block Diagram 2
Figure 3. Satellite Data Unit (SDU) Assembly Drawing
Part Number: 228E5733-00 3
Figure 4. SDU Configuration Module (SCM) Assembly Drawing
Part Number: 418E5733-00 4
Figure 5. Airbus Iridium SATCOM System Antenna Drawing
Part Number: 009E5733-00 5
Figure 801. SDU Outline Drawing 801
Figure 802. SCM Outline Drawing 803
Figure 803. Iridium Antenna Outline Drawing 804
Figure 804. Coaxial Antenna Cable Outline Drawing 806

LIST OF TABLES

TABLE TITLE **PAGE**

Table 1. Acronym Definition List 1
Table 2. Reference Document List 5

THIS PAGE IS INTENTIONALLY LEFT BLANK

INTRODUCTION

1. GENERAL

This Component Maintenance Manual (CMM) describes the components for the Airbus Iridium SATCOM System. The system includes a Satellite Data Unit (SDU), p/n: 228E5733-00, an SDU Configuration Module (SCM), p/n: 418E5733-00, along with an Iridium Antenna, p/n: 009E5733-00, and Coaxial Antenna Cable assembly, p/n: 024E5733-XX. The Airbus Iridium SATCOM System meets the performance requirements of TSO C-159a.

The Airbus Iridium SATCOM System is designed as a maintenance-free system. The SDU, SCM, Iridium Antenna and Coaxial Antenna Cable assembly are considered Level-1 maintenance line-replaceable units and are not field-repairable. No periodic adjustments, calibration, or maintenance is required to maintain this system. **The Airbus Iridium SATCOM System is considered an "ON CONDITION LRU."**

2. ACRONYMS AND ABBREVIATIONS

Table 1 defines the acronyms and abbreviations used throughout this CMM.

Table 1. Acronym Definition List

Acronym	Definition
ACARS	Aircraft Communications Addressing and Reporting System
ACP	Audio Control Panel
ADB	Address Book
AFIRS	Automated Flight Information Reporting System
ANSI	American National Standards Institute
APU	Auxiliary Power Unit
ATE	Automatic Test Equipment
ATS	Air Traffic Service
ATSU	Air Traffic Service Unit
ARINC	Aeronautical Radio Incorporated
BCD	Binary Coded Decimal

Acronym	Definition
BITE	Built-In Test Equipment
CF	Compact Flash
CFDS	Centralized Fault Display System (Airbus)
CNSSA	Core Non-Safety Services Application
CTS	Clear To Send
DITS	Digital Information Transfer System
DTP	Date Time Position
EFB	Electronic Flight Bag
EIA	Electronics Industry Association
FAA	Federal Aviation Administration
F/W	Firmware
FWC	Flight Warning Computer
GAMA	General Aviation Manufacturers Association
GFI	General Format Identifier
GPS	Global Positioning System
GSE	Ground Service Equipment
HBP	Harvard Bi-Phase
HYB	Hybrid
ICA	Instructions for Continued Airworthiness
ICAO	International Civil Aviation Organization
ICD	Interface Control Document
ICE	Iridium Certified Equipment
ICT	Installation Configuration Table
IEEE	Institute of Electrical and Electronics Engineers
IMEI	International Mobile Equipment Identifier
ISO	International Organization for Standardization
ISDM	Iridium Satellite Data Modem

Acronym	Definition
ISVM	Iridium Satellite Voice Modem
LGCIU	Landing Gear Control Interface Unit
LED	Light Emitting Diode
LRU	Line Replaceable Unit
LSK	Line Select Key
MCDU	Multi-Purpose Control and Display Unit
MOPS	Minimum Operational Performance Specifications
MUI	Maintenance User Interface
N/C	Normally Closed
NGSS	Next Generation Satellite Systems
N/O	Normally Open
ORT	Owner Requirements Table
PBX	Public Branch Exchange
PC	Personal Computer
P/N	Part Number
PSTN	Public Switched Telephone Network
PTT	Push To Talk
RMS	Root-Mean-Square
RTS	Request To Send
RTCA	Radio Technical Commission for Aeronautics
RX	Receive
SAL	System Address Label
SATCOM	Satellite Communications
SCM	SDU Configuration Module
SDI	Source/Destination Identifier
SDU	Satellite Data Unit
SIM	Subscriber Identity Module

Acronym	Definition
SSA	Safety Service Application
SSM	Signed Status Matrix
SW	Software
TIA	Telecommunications Industry Association
TNC	Threaded Neill–Concelman
TX	Transmit
TSO	Technical Standard Order
UAT	User Access Table
UTC	Coordinated Universal Time
VAC	Volts Alternating Current
VDC	Volts Direct Current
WPS	Words Per Second

3. DOCUMENT REQUIREMENTS

The following equipment and documents are, or may be, required for on-aircraft installation and check out of the Airbus Iridium System.

A. REQUIRED DOCUMENTS

Installation Manual, Airbus Iridium SATCOM System, Part Number: 165E5733-00.

B. REFERENCE DOCUMENTS

The following documents are listed for reference only.

Table 2. Reference Document List

Ref.	Document Number	Description
•	ANSI/TIA/EIA-232-F-1997	Interface Between Data Terminal Equipment and Data Circuit-Terminating Equipment Employing Serial Binary Data Interchange
•	ARINC 429-19	Mark 33 Digital Information Transfer System (DITS)
•	ARINC 573-7	Mark 2 Aircraft Integrated Data System (AIDS Mark 2)
•	ARINC 600-16	Air Transport Avionics Equipment Interfaces
•	ARINC 619-3	ACARS Protocols For Avionic End Systems
•	ARINC 664-2	Aircraft Data Networks
•	ARINC 702-6	Flight Management Computer System
•	ARINC 702A-3	Advanced Flight Management Computer System
•	ARINC 717-14	Flight Data Acquisition and Recording System
•	ARINC 718-4	Mark 3 Air Traffic Control Transponder (ATCRBS/MODE S)
•	ARINC 718A-2	Mark 4 Air Traffic Control Transponder (ATCRBS/MODE S)
•	ARINC 739A-1	Multi-Purpose Control And Display Unit
•	ARINC 741-13	Aviation Satellite Communication System
•	ARINC 758-2	Communications Management Unit (CMU) Mark 2
•	ARINC 761-4	Second Generation Aviation Satellite Communication System, Aircraft Installation Provisions
•	FAA TSO C-159a	Technical Standard Order, Avionics Supporting Next Generation Satellite Systems (NGSS)
•	GAMA Publication No. 11, Ver. 5.1	ARINC 429, General Aviation Subset
•	IEEE 802.3-2008	IEEE Standard for Information Technology-Specific Requirements - Part 3: Carrier Sense Multiple Access with Collision Detection (CMSA/CD) Access Method and Physical Layer Specifications

Ref.	Document Number	Description
•	RTCA/DO-160G	Environmental Conditions and Test Procedures for Airborne Equipment
•	RTCA/DO-214	Audio Systems Characteristics and Minimum Operational Performance Standards for Aircraft Audio Systems and Equipment
•	RTCA/DO-262A	Minimum Operational Performance Standards for Avionics Supporting Next Generation Satellite Systems (NGSS)
•	TIA/EIA-422-B	Electrical Characteristics of Balanced Voltage Digital Interface Circuits

4. MAINTENANCE PHILOSOPHY

The Model Airbus Iridium SATCOM System line replaceable units (LRUs), consisting of the SDU and SCM, are considered *"ON CONDITION LRUs"* and are designed as maintenance-free units. The SDU and SCM are considered Level-1 maintenance units and are not field-repairable.

The bench testing and repair of circuit card assemblies (CCAs) containing surface mount technology (SMT) devices require specialized factory equipment, training, and techniques. These assemblies are not field-repairable while the unit is under the warranty period. As a result, during the unit's warranty period, the Airbus Iridium SATCOM System maintenance philosophy is replacement of failed LRU. If an LRU failure occurs, the LRU is to be returned to L-3Com for testing, fault isolation, and repair.

The L-3Com Repair Station has been given authority to repair, modify, and bench test for return to service all Airbus Iridium SATCOM System LRUs using L-3Com Factory ATP procedures. Repair, modification, and/or recertification of Airbus Iridium SATCOM System LRUs as per ATP procedure are limited to the L-3Com Repair Station.

In turn, the operator will receive a certified Return-To-Service unit to be reinstalled into the aircraft or as a replacement for a spare unit. Attempts to repair any components of the Airbus Iridium SATCOM System or the LRU will void the warranty.

Refer to the Airbus Iridium SATCOM System Installation manual, p/n: 165E5733-00 for detailed instructions for on-aircraft installation, removal and operation.

5. COMPONENT MAINTENANCE MANUAL (CMM) DESCRIPTION

This CMM consists of a single volume. The manual conforms to the intent and form of Air Transport Association of America (ATA) Specification 100, Revision 36. The manual is written for an audience of intermediate- and depot-level maintenance technicians; however the Airbus Iridium SATCOM System components are not field-repairable. Functional, electrical and mechanical aspects of Airbus Iridium SATCOM System are documented - description, specifications, operation, top-level illustrated parts list are contained in this manual. The CMM content is summarized as follows:

A. FRONT MATTER

Front Matter material consists of a title page, service bulletin list, record of revisions, record of changes, list of effective pages, table of contents, and this introduction.

B. DESCRIPTION AND OPERATION

This section contains top-level description information for the Airbus Iridium SATCOM System. Line art is used to illustrate the unit, its interconnections, and functionality.

C. TESTING AND TROUBLESHOOTING

This section is not applicable under the Level-1 maintenance philosophy for the SDU and SCM units. These units are not field-repairable, and as such, must be returned to the L-3AR factory for testing and repair should an LRU fail.

D. DISASSEMBLY

This section is not applicable under the current maintenance philosophy for the SDU and SCM units. These units are not field-repairable, and as such, must be returned to the L-3AR factory for testing and repair should an LRU fail.

E. CLEANING

This section is not applicable under the current maintenance philosophy. The SDU and SCM LRUs are level-1 maintenance units and are not field-repairable, and as such, no component cleaning may be performed.

F. CHECK

This section is not applicable under the current maintenance philosophy for this system. The system is not field-repairable, and as such, no field checks may be performed.

G. REPAIR

This section is not applicable under the current maintenance philosophy. The SDU and SCM LRUs are level-1 maintenance units and are not field-repairable, and as such, must be returned to the factory for testing and repair should an LRU fail.

H. ASSEMBLY

This section is not applicable under the current maintenance philosophy for the SDU and SCM units. These units are not field-repairable, and as such, must be returned to the L-3AR factory for testing and repair should an LRU fail.

I. FITS AND CLEARANCES

This section provides specifications and outline and dimension drawings for the Airbus Iridium SATCOM System.

J. SPECIAL TOOLS, FIXTURES AND EQUIPMENT

This section is not applicable under the current maintenance philosophy for this unit. The unit is not field-repairable, and as such, must be returned to the factory for testing and repair should an LRU fail.

K. ILLUSTRATED PARTS LIST

This section provides only top-level drawings of the SDU and SCM. LRU part lists and circuit card assembly diagrams are not applicable under the Level-1 maintenance philosophy for this system. The unit is not field-repairable, and as such, must be returned to the factory for testing and repair should an LRU fail.

6. DOCUMENT VERIFICATION

All CMM material was validated against existing engineering source material. Effectivity of the manual is based on effective dates and product serial number and is identified by a list of effective pages in the front of the manual.

DESCRIPTION AND OPERATION

1. SYSTEM OVERVIEW

Refer to Figure 1. The Airbus Iridium SATCOM System comprises a portion of the aircraft avionics, or “Aircraft Earth Station” (AES) required to support the "Next Generation Satellite System" (NGSS) using the Iridium Satellite System as specified in RTCA/DO-262A.

This system serves as the radio transceiver that provides RF path connectivity with the satellite(s), and provides the digital data (ISDM) and/or analog voice and/or digital voice interfaces (ISVM) with other aircraft user subsystems. Its primary functions are: modulation and demodulation of transmitted and received signals, respectively, signaling and protocol interactions with corresponding satellites, channel management, and switching and interconnections with the aircraft and their attached avionics.

The Airbus Iridium SATCOM System provides multiple voice and data communications functions in the aircraft. The Automated Flight Information Reporting System (AFIRS) provides a satellite voice and data communications (SATCOM) link with the Public Switched Telephone Network (PSTN) via the Iridium® satellite network. The system uses a standard ARINC 741/761 SATCOM interface to the flight crew’s Audio Integrating System and ARINC 739A Multi-Purpose Control and Display Units (MCDUs) in the cockpit, as well as providing 3-extension Public Branch Exchange (PBX) capability for up to 2 handsets in the cabin.

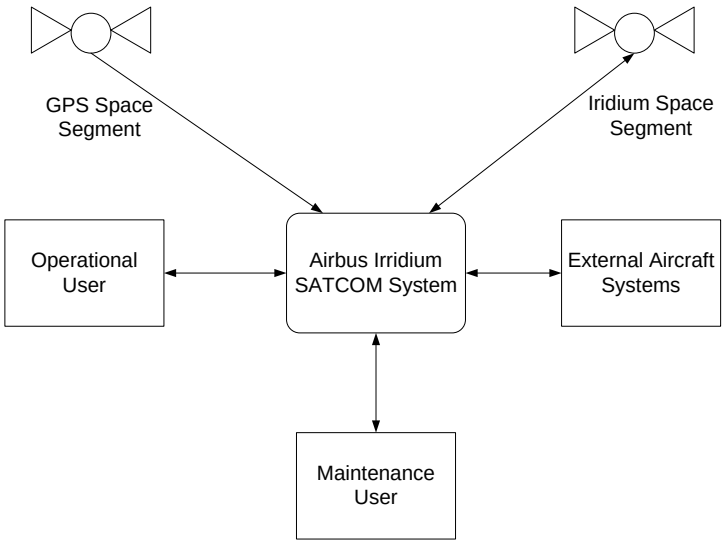

Figure 1. Airbus Iridium SATCOM System Operational Concept

Refer to Figure 2. The Airbus Iridium SATCOM System interfaces to various aircraft systems to monitor, record, and report the aircraft flight and system data. This data includes aircraft movement and position reports, Flight Data Monitoring (FDM) data records, engine and airframe system health and trend records and reports, and monitored parameter tolerances and exception reports.

The Airbus Iridium SATCOM System provides a dedicated safety-services data channel with the capability to send and receive standard ACARS messages between the aircraft's Air Traffic Service Unit (ATSU) and a safety-services certified terrestrial service provider.

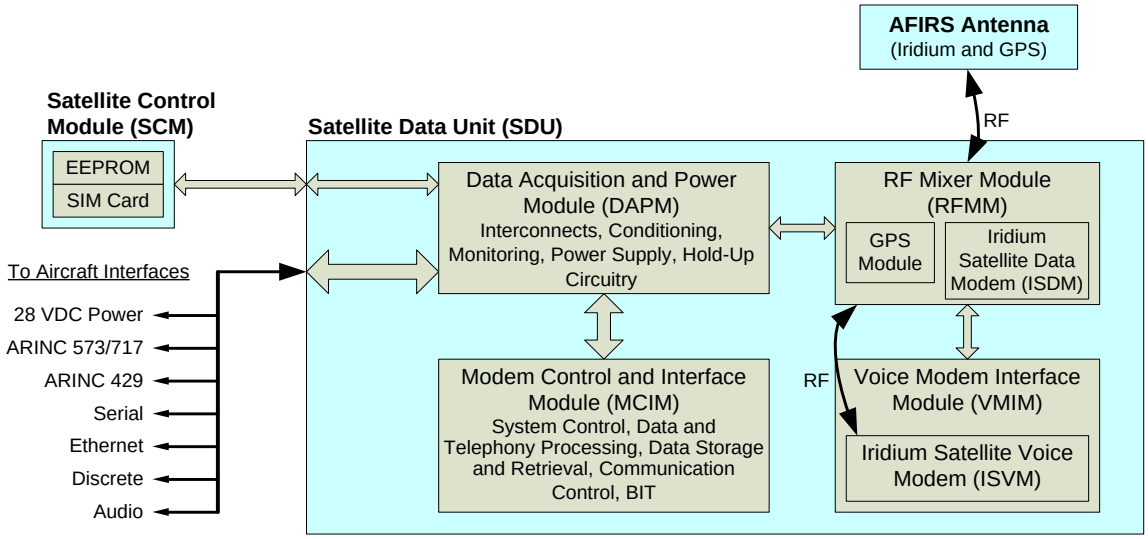

Figure 2. Airbus Iridium SATCOM System Block Diagram

2. SYSTEM ARCHITECTURE

The Airbus Iridium SATCOM System consists of three Line Replaceable Units (LRUs). The core system components are the Satellite Data Unit (SDU), the SDU Configuration Module (SCM), the Iridium Antenna, and Coaxial Antenna Cable assembly. Optional components include Cabin Handset(s) (Wired or Cordless).

A. SATELLITE DATA UNIT (SDU)

Refer to Figure 3. The SDU is an ARINC 600 2MCU electronic enclosure that resides in the aircraft's equipment rack. It contains the system intelligence and interface circuitry for connecting to the various aircraft systems. The SDU also contains Iridium voice and data modem(s), as well as a GPS receiver.

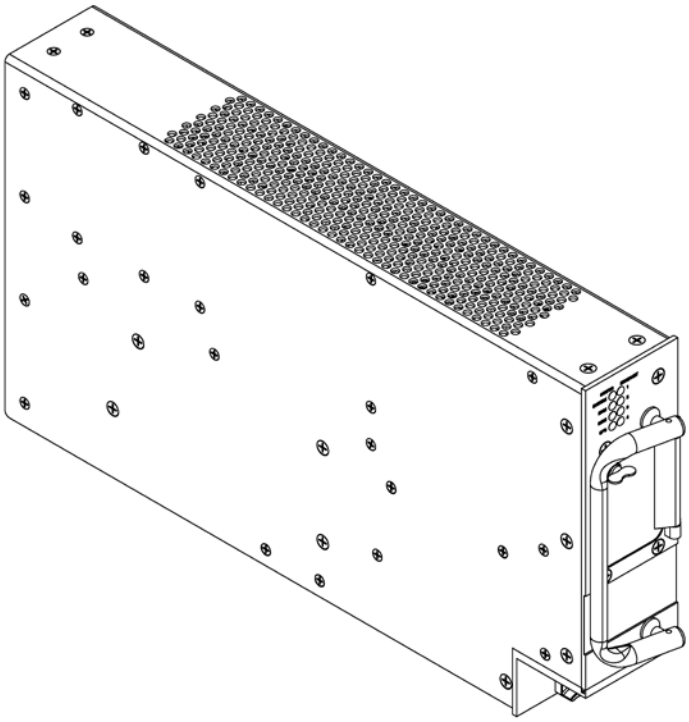

Figure 3. Satellite Data Unit (SDU) Assembly Drawing
Part Number: 228E5733-00

B. SDU CONFIGURATION MODULE (SCM)

Refer to Figure 4. The SCM is a small module that is mounted near the SDU. It uses an EEPROM to store a copy of the “aircraft personality” information. The SCM also contains the Iridium SIM card, which provides access to the Iridium satellite network for the voice communications functionality.

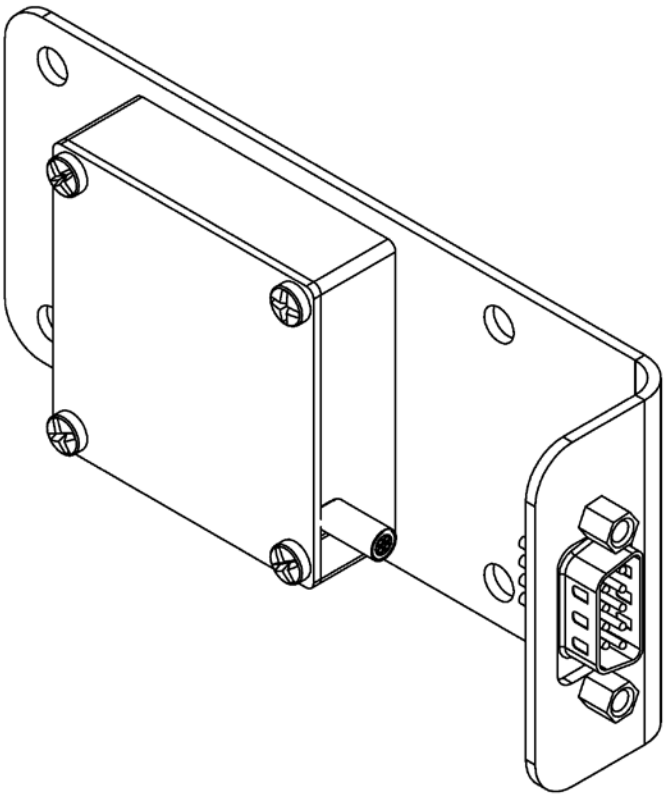

Figure 4. SDU Configuration Module (SCM) Assembly Drawing
Part Number: 418E5733-00

C. IRIDIUM ANTENNA SYSTEM

Refer to Figure 5. The antenna is a Commercial Off-The-Shelf (COTS) unit that is mounted on the top of the aircraft's fuselage. It provides satellite connectivity for both the GPS and Iridium satellite systems.

The Airbus Iridium SATCOM System has a single combined Iridium/GPS RF connection on the rear interface connector, which is to be connected to a single combined Iridium/GPS Antenna. The antenna system is comprised of all the components from the rear interface connector up to, and including, the antenna. The total gain of the antenna system must be greater than 0 dB at 1626.5 MHz (measured at the antenna zenith).

Most Iridium antennas have a gain of +3 dBic at the zenith, therefore, the maximum attenuation in the rest of the antenna system must be less than 3 dB. If an antenna with a different gain is selected, the maximum loss of the rest of the antenna system must be adjusted accordingly.

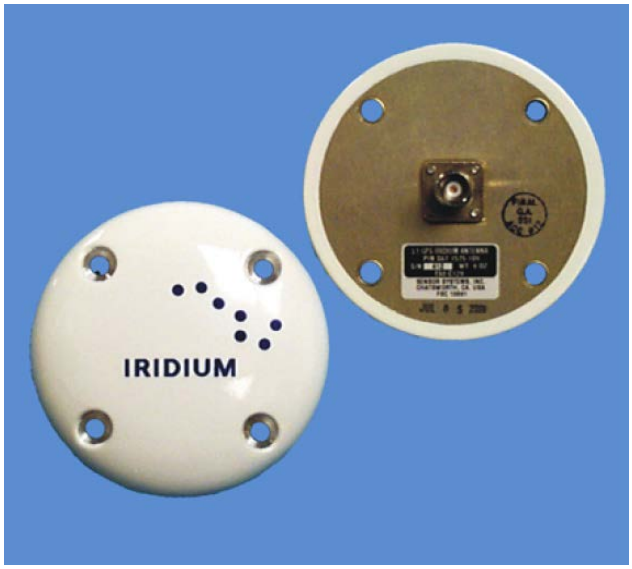

Figure 5. Airbus Iridium SATCOM System Antenna
Drawing Part Number: 009E5733-00

THIS PAGE IS INTENTIONALLY LEFT BLANK

TESTING AND TROUBLESHOOTING

1. GENERAL

This section is not applicable to this CMM.

The Airbus Iridium System components: Satellite Data Unit, p/n: 228E5733-00, and SDU Configuration Module, p/n: 418E5733-00, have been designated as Level-1 non-field-repairable Line Replaceable Units. These Airbus Iridium System units should be returned to L-3 Aviation Recorders Repair Station for all maintenance tasks (i.e. disassembly, assembly, replacement parts, testing, and return to service certification).

THIS PAGE IS INTENTIONALLY LEFT BLANK

DISASSEMBLY

1. GENERAL

This section is not applicable to this CMM.

The Airbus Iridium System components: Satellite Data Unit, p/n: 228E5733-00, and SDU Configuration Module, p/n: 418E5733-00, have been designated as Level-1 non-field-repairable Line Replaceable Units. These Airbus Iridium System units must be returned to L-3 Aviation Recorders Repair Station for all maintenance tasks (i.e. disassembly, assembly, replacement parts, testing, and return to service certification).

THIS PAGE IS INTENTIONALLY LEFT BLANK

CLEANING

1. GENERAL

This section is not applicable to this CMM.

The Airbus Iridium System components: Satellite Data Unit, p/n: 228E5733-00, and SDU Configuration Module, p/n: 418E5733-00, have been designated as Level-1 non-field-repairable Line Replaceable Units. These Airbus Iridium System units should be returned to L-3 Aviation Recorders Repair Station for all maintenance tasks (i.e. disassembly, assembly, replacement parts, testing, and return to service certification).

THIS PAGE IS INTENTIONALLY LEFT BLANK

CHECK

1. GENERAL

This section is not applicable to this CMM.

The Airbus Iridium System components: Satellite Data Unit, p/n: 228E5733-00, and SDU Configuration Module, p/n: 418E5733-00, have been designated as Level-1 non-field-repairable Line Replaceable Units. These Airbus Iridium System units should be returned to L-3 Aviation Recorders Repair Station for all maintenance tasks (i.e. disassembly, assembly, replacement parts, testing, and return to service certification).

THIS PAGE IS INTENTIONALLY LEFT BLANK

REPAIR

1. GENERAL

This section is intended to contain information required to restore a worn or damaged part to a serviceable condition. However, the Airbus Iridium SATCOM System is a completely solid-state device that does not contain any electro-mechanical moving parts.

The Airbus Iridium SATCOM System consists of a Satellite Data Unit (SDU) and SDU Configuration Module (SCM) line replaceable units (LRUs).

These LRUs have been designed as Level-1 maintenance units that make extensive use of surface mount technology (SMT). The repair of circuit card assemblies (CCAs) containing SMT components requires specialized factory equipment, training, and techniques, therefore, such CCAs are not field-repairable. Only the L-3AR Repair Station, FAA: LD7R612J; EASA.145.4620 is authorized to repair the Airbus Iridium SATCOM System components in accordance with L-3AR Factory test, calibration and repair specifications.

CAUTION: **THE AIRBUS IRIDIUM SYSTEM CIRCUIT BOARDS ARE SUSCEPTIBLE TO ELECTROSTATIC DESTRUCTION. PRIOR TO HANDLING PWAs, ENSURE PROPER PERSONNEL GROUNDING TECHNIQUES ARE USED.**

ENSURE THAT CARDS ARE PLACED INTO STATIC SHIELDING CONDUCTIVE BAGS WHEN HANDLING OR STORING.

THIS PAGE IS INTENTIONALLY LEFT BLANK

ASSEMBLY

1. GENERAL

This section is not applicable to this CMM.

The Airbus Iridium System components: Satellite Data Unit, p/n: 228E5733-00, and SDU Configuration Module, p/n: 418E5733-00, have been designated Level-1 non-field-repairable Line Replaceable Units. These Airbus Iridium System units must be returned to the L-3AR Repair Station, FAA: LD7R612J; EASA.145.4620 for service in accordance with L-3AR Factory assembly specification instructions.

THIS PAGE IS INTENTIONALLY LEFT BLANK

FITS AND CLEARANCES

1. GENERAL

This section provides the Airbus Iridium System specifications and outline and dimensions. Since the recorder uses solid-state memory recording technology, there are no internal fits and clearances or torque values normally associated with older technology electro-mechanical tape recorder units.

2. EQUIPMENT SPECIFICATIONS

This section describes the mechanical specifications of the components of the Airbus Iridium SATCOM System.

A. SATELLITE DATA UNIT (SDU)

This paragraph describes the mechanical specifications of the Satellite Data Unit (SDU) refer to Figure 801 for an outline of this component.

1) SDU Outline & Dimensions

The SDU is housed in an ARINC 600 2MCU enclosure, which is designed to be mounted in a standard ARINC 600 mounting tray.

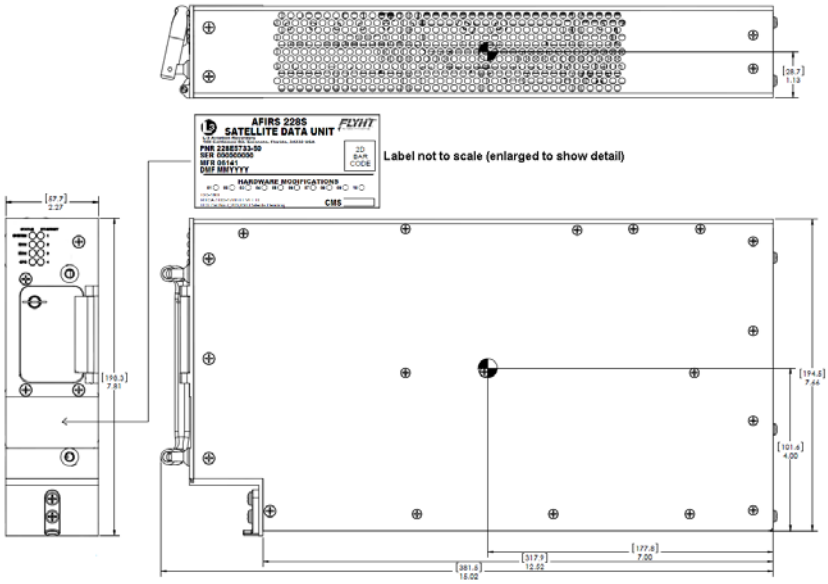

Figure 801. SDU Outline Drawing (dimensions in [millimeters] and inches)

2) SDU Specifications

Dimensions:	7.81” x 2.27” x 15.02” (198.3mm x 57.7mm x 381.5mm)
Weight:	7.7 lbs. (3.49 kg) Max.
Material/Finish:	Aluminum Alloy with Black Polyurethane Finish
Mounting:	ARINC 600 2MCU Mounting Tray
Rear Mating Connector:	Size 2 ARINC 600 Receptacle Radiall P/N: NSXN2P201S0004
Maintenance Connector:	RJ45 (8P8C) Modular Connector Jack
Flash Card:	Compact-Flash® (Type I or Type II)
Environmental &: Electrical:	This information is contained in Appendix C of the Airbus Iridium SATCOM System Installation Manual, p/n: 165E5733-00.

B. SDU CONFIGURATION MODULE (SCM)

This paragraph describes the mechanical specifications of the SDU Configuration Module (SCM). Refer to Figure 802 for an outline of this component.

1) SCM Outline & Dimensions

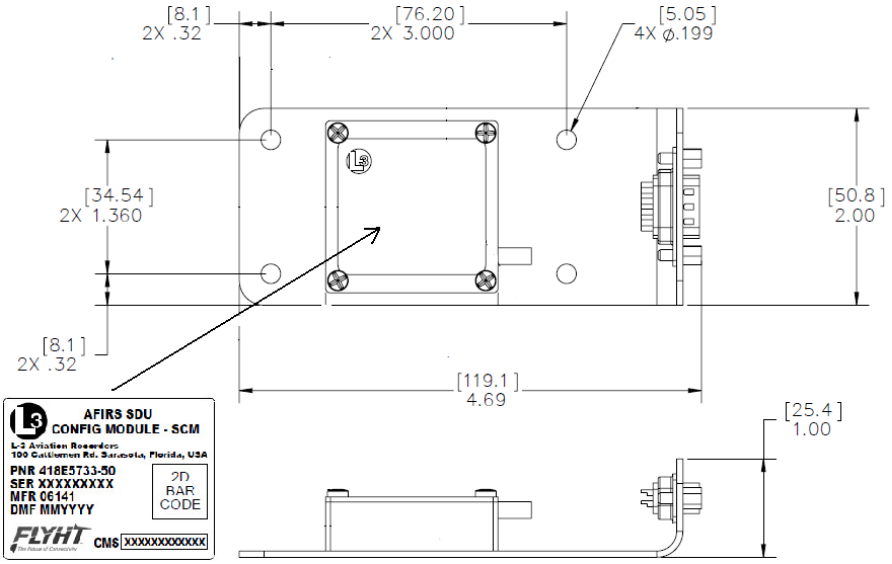

Figure 802. SCM Outline Drawing (dimensions in [millimeters] and inches)

2) SCM Specifications

Dimensions:	1.00” x 2.00” x 4.69” (25.4mm x 50.8mm x 119.1mm)
Weight:	0.4 lbs. (0.18 kg) Max.
Material/Finish:	Aluminum alloy with clear chromate per MIL-DTL-5541, Type II, Class 3 on all surfaces.
Environmental &: Electrical:	This information is contained in Appendix C of the Airbus Iridium SATCOM System Installation Manual, p/n: 165E5733-00.

C. IRIDIUM ANTENNA SYSTEM

This paragraph describes the mechanical specifications of the Iridium Antenna. Refer to Figure 803 for the Outline & Dimension drawing of this component.

1) Iridium Antenna Outline & Dimensions

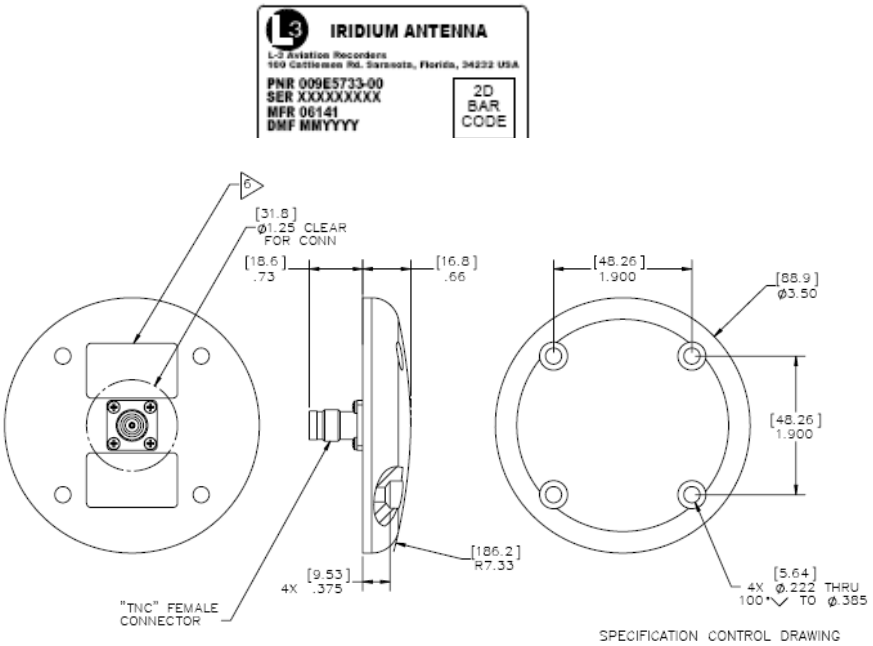

Figure 803. Iridium Antenna Outline Drawing (dimensions in [millimeters] and inches)

2) Iridium Antenna Specifications

The Iridium SATCOM System Antenna is a passive antenna designed to cover the frequency range from 1565 MHz to 1626.5 MHz for Iridium transmit / receive operations and GPS reception. It is a low-profile, circular device that can be mounted directly to the aircraft fuselage. This antenna connects to the Iridium SDU through a coaxial cable.

Weight (Typical)

0.170 kg (6 oz.)

Overall Dimensions (Typical)

Height:	16.8 mm (0.66 inches)
Diameter:	89 mm (3.5 inches)

Manufacturer's Specification Reference Number

Drawing 009E5733-00, Revision – Iridium Antenna – Passive, 1565 – 1626.5 MHz, RHCP – refer to Figure 5.

Iridium SATCOM System Supplier Equipment Specification,
Document No. 905-E5750-07, Revision –

Environmental Specifications

The Iridium SATCOM System antenna meets the environmental requirements of RTCA DO-262A where applicable as referenced in Document No. 905-E5809-42, Revision A.
Testing was performed to DO-160F, MIL-STD-810, EN-60068, ISO-2669, and the applicable ABDs unless otherwise noted.

Temperature:	-55 C (-67 F); to +85 C (+185 F)
Altitude:	-100 to +55,000 FT
Vibration:	10 G's (DO-160D/E F2-AB)

Electrical Specifications

Frequency:	1616.0 – 1625.5 MHz
VSWR:	≤ 1.5:1
Impedance:	50-Ohms
Polarization:	RHCP
• Axial Ratio:	≤ 3.0 db @ zenith
• Power Handling:	60 Watts CW

D. COAXIAL ANTENNA CABLE ASSEMBLY

Refer to Figure 804. The Iridium SATCOM System Coaxial Cable is an RF Cable designed to cover the frequency range from 1565 MHz to 1626.5 MHz for Iridium transmit / receive operations and GPS reception. It is a low-loss, aircraft-grade cable that will be mounted in the aircraft fuselage. This cable provides the interconnection between the Iridium SATCOM System Satellite Data Unit and the Iridium Antenna. The Coaxial Cable has an ARINC Size 5 coaxial contact installed on one end and a TNC male connector installed on the other.

There are three possible lengths for this Coaxial Cable. They are designated by the last two digits of the part number (01, 02 or 03) as listed below:

1) Coaxial Antenna Outline & Dimensions

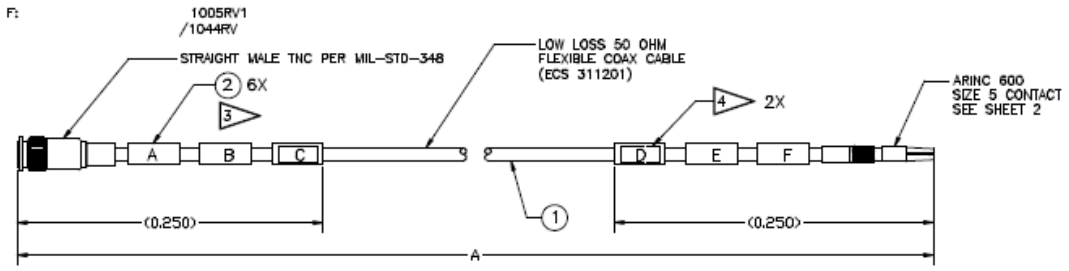

Figure 804. Coaxial Antenna Cable Outline Drawing (dimensions in [millimeters] and inches)

2) Iridium Antenna Specifications

Weight (Typical)

- 024E5733-01 - 1.633 kg (57.6 oz)
- 024E5733-02 – 1.497 kg (52.8 oz)
- 024E5733-03 – 1.470 kg (51.8 oz)

Overall Dimensions (Typical)

- Length:

  024E5733-01 – 11.3 m (445.0 inches)
  024E5733-02 – 10.2 m (402.0 inches)
  024E5733-03 – 9.95 m (392.0 inches)

- Diameter: 8.1 mm (0.317 inches)

Manufacturer's Specification Reference Number

- Drawing 024E5733-00, Revision B; Iridium Antenna Coax Cable – see Figure 804.
- Iridium SATCOM System Supplier Equipment Specification, Document No. 905-E5750-07, Revision L.

Environmental Specifications

The Iridium SATCOM System Coaxial Cable meets the environmental requirements of RTCA DO-262A where applicable as described in Document No. 905E5836-42. Testing was performed to DO-160F, EN 4604, EN 3475, and the applicable ABDs unless otherwise noted.

THIS PAGE IS INTENTIONALLY LEFT BLANK

SPECIAL TOOLS, FIXTURES AND EQUIPMENT

1. GENERAL

The Airbus Iridium System components, SDU p/n: 228E5733-00 and SCM p/n: 418E5733-00) have been designated as Level-1 non-field-repairable Line Replaceable Units. There are no special tools, fixtures and test equipment for Level-1 maintenance for the Airbus Iridium System units. These units must be returned to L-3 Communications for all maintenance tasks (i.e. disassembly, assembly, replacement parts, testing, and return to service certification).

THIS PAGE IS INTENTIONALLY LEFT BLANK

ILLUSTRATED PARTS LIST

1. GENERAL

The Airbus Iridium System components: Satellite Data Unit, p/n: 228E5733-00 and SDU Configuration Module, p/n: 418E5733-00, have been designated as Level-1 non-field-repairable Line Replaceable Units. The Airbus Iridium System units should be returned to L-3 Communications for all maintenance tasks (i.e. disassembly, assembly, replacement parts, testing, and return to service certification).

THIS PAGE IS INTENTIONALLY LEFT BLANK