6. Troubleshooting Guide

Question: I installed the batteries in my transmitter, but the power lights do not come on:
Answer:
- Check that the batteries are properly installed by checking the polarity (+ and -).

Question: My radio has power, but I have no control:
Answers:
- Check to be sure the power switch is on and connected to the receiver.
- Make sure the batteries are charged (Replace or recharge if needed.)
- Make sure you are using the proper crystals.

Question: My vehicle is glitching, or the servos and/or speed control is acting erratically:
Answers:
- Check that there are no radios operating on your channel.
- Make sure your electric motor has capacitors and the comutator is clean and brushes are not worn out. Replace if needed.
- Check for loose screws as metal-to-metal contact can cause interference.
- Make sure your receiver antenna has not been damaged or cut.
- Make sure the power wires are at least 2" away from the receiver.
- Replace the crystals if needed.
- If all fails, send the system in to be serviced, as there may be internal damage.

7. Warnings

- Never operate your car or truck in a crowded street with traffic.
- Always extend your transmitter antenna when in operation.
- Always check the battery power indicator before use.
- Do not operate two or more models on the same frequency at the same time.
- Do not operate your model in the rain or run through standing water.
- Do not operate your model within one mile of a radio control racetrack.
- Do not operate your model while under the influence of drugs or alcohol.
- Always turn on your transmitter first and then the receiver to prevent loss of control.
- When collapsing your antenna, never push it from the top or it may bend.

8. Racers Tips

- Slower is faster, Do not overdrive your car. A cleaner line around the track is faster than more top speed. Don't overshoot the corners.
- Reduce your steering dual rate if your car is over-steering or "Loose", and increase the rate if your car is under-steering or "Pushing."
- Add more drag brake (see Steering and Throttle trims) if your vehicle is "Pushing" into the corners. Move the trim the other direction so your car creeps forward slightly when the throttle is at neutral if your car is "Loose" when entering the corners.
- Don't crash! It's better to take a more conservative line than flip over and have to have a turn marshal turn you back over.
- The most important thing to remember is to have fun!

CE 0681 ⓘ
Austria, Belgium, Denmark, Finland, France, Germany, Greece, Iceland, Ireland, The Netherland, Italy, Spain, Norway, Portugal, United Kingdom, Luxembourg, Sweden, Switzerland

MADE IN KOREA

HiTEC TOUCH YOUR DREAMS

2CHANNEL AM RADIO CONTROL SYSTEM
AGGRESSOR
INSTRUCTION MANUAL

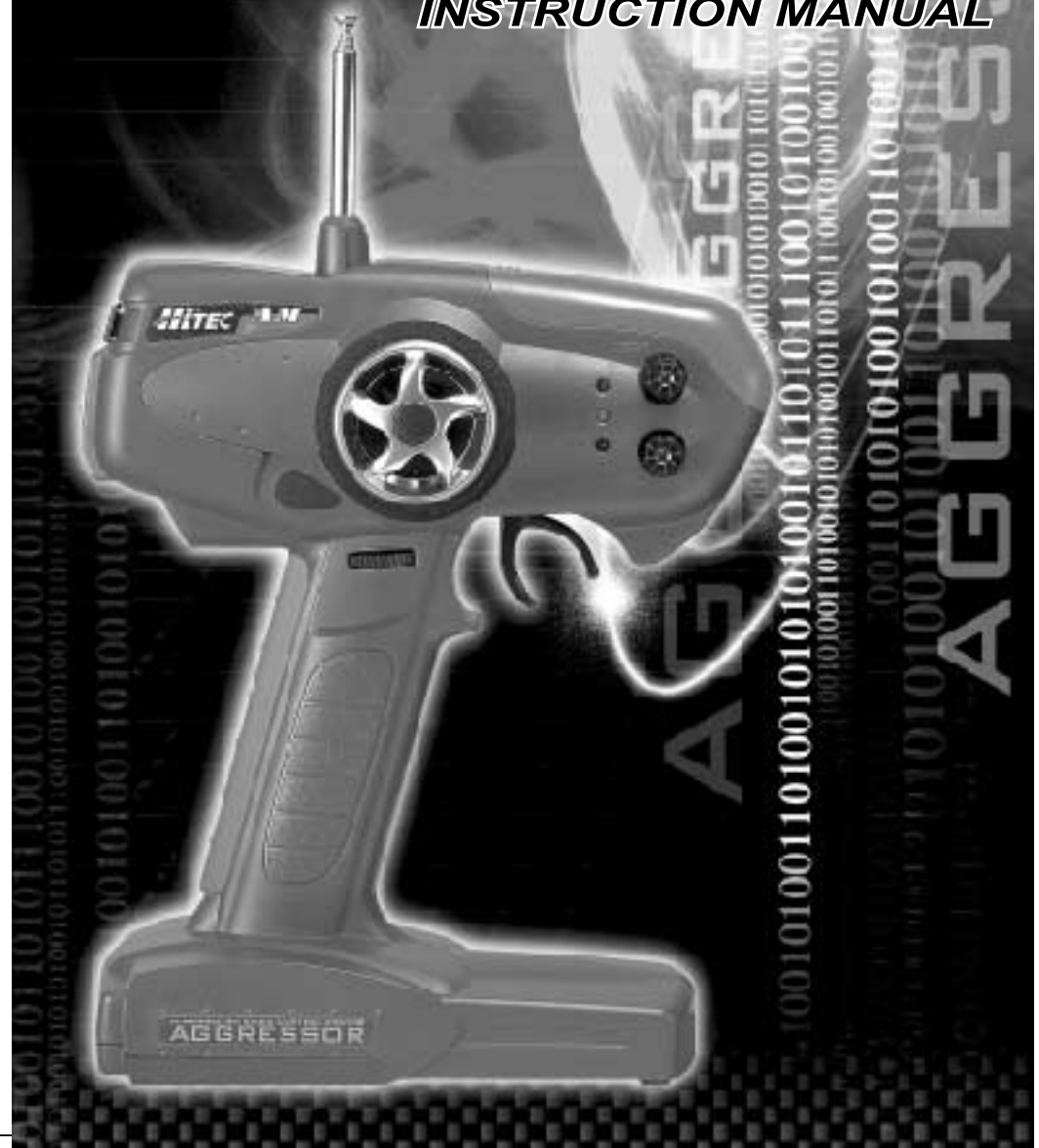

Table of Contents

page 3
1. System Specifications
a. Transmitter
b. Accessories
c. Options

page 4
2. Transmitter Functions and Operations
a. Power Switch
b. Battery Indicator LED's
c. Steering Dual Rate

page 5
d. Steering and Throttle trims
e. Tuning Cover
f. Servo Reversing switches
g. Battery Cover
h.Antenna
i.Grip Pad

page 6
j.Crystal
k.Charging Jack
l.Steering Wheel
m.Throttle Trigger
3. Transmitter Battery Installation
4. Recharging Batteries

page 7
5. Receiver and Servo Connections
a. Receiver
b. Servos
c. Battery

page 8
6. Troubleshooting Guide
7. Warnings
8. Racers Tips

Product Service Information (for USA & Canada only)
In the event you would require service to your radios, please send the parts to ::

Hitec RCD USA, Inc. Service Department
12115 Paine St.
Poway, CA 92064

Please include your name address and telephone number along
with a brief description of the failure or the work that you are requesting to be done.

Introduction

Congratulations on your purchase of the Aggressor AM pistol grip radio system. The Aggressor AM is loaded with many great features to maximize your R/C experience. Please read this manual carefully to familiarize yourself with the operation of your new Aggressor. After reading this manual, store it in a safe place for future reference.

System Features

- Ergonomically designed 2 channel Pistol Grip AM Radio
- Servo Reversing (All channels)
- Dual Rate Steering (Adjustable on the fly)
- 3 L.E.D. Battery status indicators
- Removable crystals for easy channel changing (If this is legal in your Country)
- Interchangeable rubber grip pads to fit all hand sizes
- Assorted colored grip pads and tuning covers for personalizing your radio
- Foam steering wheel for comfortable control
- Charging Jack for optional rechargeable batteries
- BEC receiver
- Standard HS-311 or 322 servo
- Receiver dry battery holder

1. System Specifications

A) Transmitter:
- Power Output: 87mW
- Current drain 180mA
- Modulation: AM/PPM
- Power supply: 8AA alkaline, Nicad or NiMh batteries
- Frequencies: 27mhz (6 channels), 75mhz (30 channels)

B) Receiver:
- HAS-02MB
- Modulations: AM
- Power Supply: 4.8V~8.4V
- Weight: 0.81oz
- Size: 1.2"x1.9"x 0.7"
- Current drain: 30mA +/- 0.3mA
- BEC Maximum output: 3.0A

C) Servo:
- HS-322
- Voltage range: 4.8 - 6V
- Speed: 0.16sec/60°degree (6V)
- Torque: 53in/oz (6V)
- Weight: 1.6oz
- Size: 1.6" x 0.8" x 1.4"

D) Options:
- Red, Blue and Black colored grip pads in two sizes each (Sold separately).
- Tuning covers available in Red, Blue and Black, as well as custom designs in Silver Carbon, Wood (Burl) and Camouflage (Sold separately).

2. Transmitter Functions and Operations

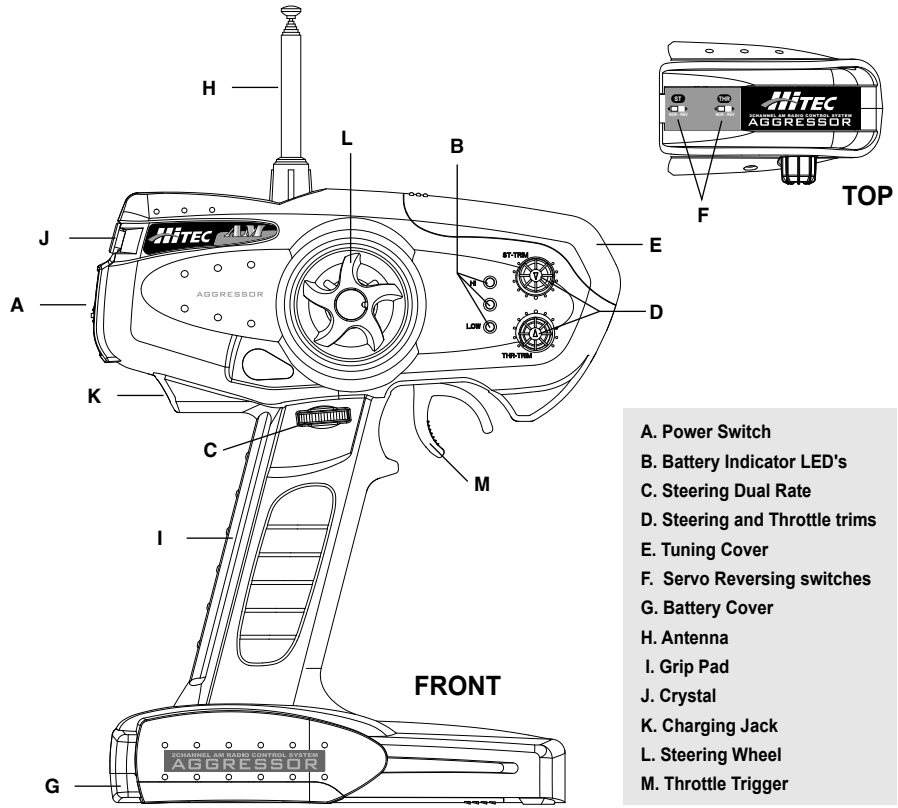

A. Power Switch
B. Battery Indicator LED's
C. Steering Dual Rate
D. Steering and Throttle trims
E. Tuning Cover
F. Servo Reversing switches
G. Battery Cover
H. Antenna
I. Grip Pad
J. Crystal
K. Charging Jack
L. Steering Wheel
M. Throttle Trigger

A) Power Switch:
- Slide the switch up to turn on the transmitter, and down to turn it off.
- Warning: Always turn your transmitter on before switching on the receiver switch. This will help prevent accidental runaways.

B) Battery Indicator LED's:
- Green is mid - high power
- Amber is mid power (You should replace or charge your batteries very soon.)
- Red is low power (Stop driving!)

C) Steering Dual Rate: This is not shown in the image
- Adjusts the overall travel of the steering servo.
- Push the dial forward with your thumb for maximum steering.
- Pull the dial back with your thumb to reduce the travel.
- Use this to fine tune your vehicles handling to the track conditions.
- Use more steering travel for high bite tracks and less for low bite tracks.

D) Steering and Throttle trims:
- The trims are used to fine-tune the point where the servo returns to center.
- Use the ST-TRIM so your vehicle will go perfectly straight when the steering wheel is centered. If you move the trim to its maximum and the vehicle does not go straight, move the servo horn a notch or two on the servo output spline or adjust the linkage to fix the problem. Ideally the servo horn will have equal throw in each direction.
- Use the THR-TRIM to adjust the "Drag Brake"; this is the amount of braking that occurs when you let go of the trigger. Be aware that too much brake may affect the servo end point preventing maximum power.
- ***Tip#1: Do not mount the horn on the servo until you turn on the radio and center the trims.***
- ***Tip#2: Always trim your vehicle before you run or race.***

E) Tuning Cover:
- Remove the tuning cover to access the servo reversing switches.
- This is also an interchangeable part with assorted colors and designs to choose from so you may customize the look of your radio. See "Options" for more info.

F) Servo Reversing switches:
- These are used to change the direction of the servo travel for proper control when activated.
- If you steer right and the wheels go left, change the "ST" switch from NOR to REV or REV to NOR if needed. The same applies to the throttle.
- ***(Note: You should not need to change the "THR" switch from NOR if using an Electronic Speed Control.)***

G) Battery Cover:
- Remove to change batteries.

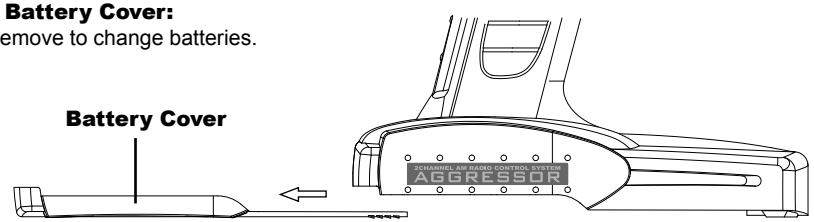

H) Antenna:
- Always extend your antenna before turning your transmitter on.
- Your antenna may be removed by turning counter clockwise.
- Warning: When collapsing your antenna, never push it from the top or it may bend!

I) Grip Pad:
- The removable grip pad helps keep your hand from slipping on the radio pistol grip handle so you have better control of the vehicle.
- It is also available in assorted colors and sizes to customize the look and feel of your radio.

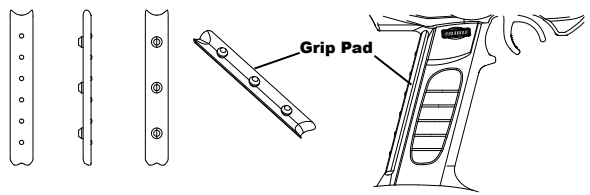

J) Crystal:
- The crystal is located above the power switch and can be interchanged with different channels in conjunction with the receiver to prevent any conflicts with other radios used in your area.
- AM Transmitter crystal part# 67475XX (XX= Your channel number)
- Warning: Use only genuine Hitec crystals. Other brands will not work properly!

K) Charging Jack:
- The charging jack is located under the power switch for use with the optional Hitec CG-25 charger(110v only) when using rechargeable batteries. (See "Recharging Batteries" for more information about this feature.)
- Used to control the steering of your vehicle.

L) Steering Wheel:
- Used to control the steering of your vehicle.

M) Throttle Trigger:
- Used to control the throttle and braking for your vehicle.
- Pull the trigger for throttle and push it for braking or reverse (Reversing ESC's only.)

3. Transmitter Battery Installation

- Press down on the battery cover and slide in the direction illustrated.
- Remove the cover and install the batteries as shown.
- Be careful to pay close attention to the polarity of each cell or the transmitter will not operate.
- Replace the cover making sure it is closed securely.

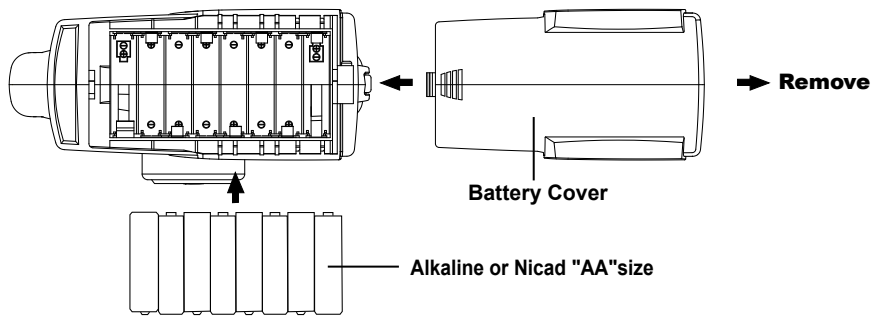

4. Recharging Batteries

- You must install individual AA size rechargeable batteries.
- Only use Nicad or NiMh type. (Alkaline batteries are not rechargeable).
- Connect the optional Hitec CG-25 overnight wall charger to the charging jack located under the switch to charge. Depending on the capacity of the battery;
- A full charge on a typical Nicad will take 12-16 hours.
- A full charge on a typical NiMh will take 24-36 hours.

5. Receiver and Servo Connections

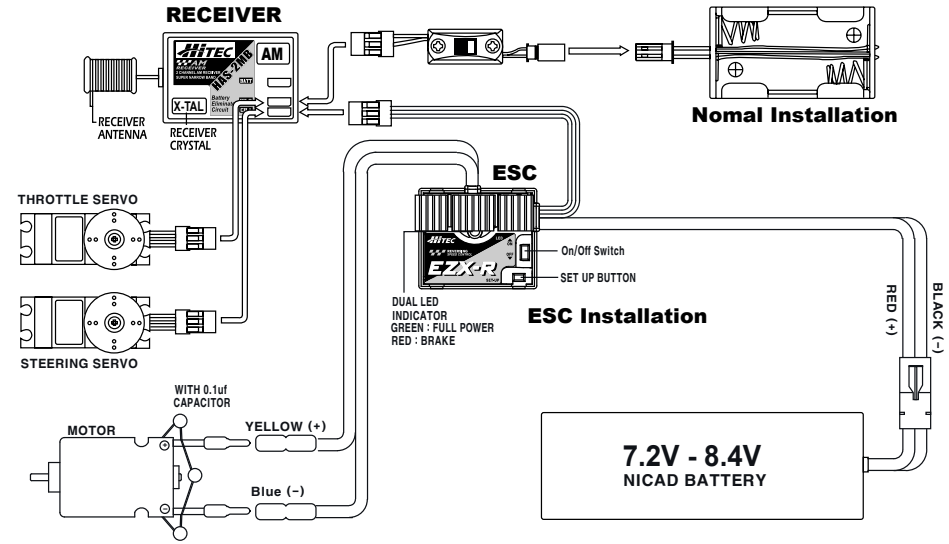

A) Receiver:
- The receiver in your Aggressor system includes a BEC (Battery Eliminator Circuit), which eliminates the need for a separate receiver battery when used with a mechanical or electronic speed control. Power input should be no more than 8.4V (7 cells)
- You can use a separate receiver battery if required for your particular model. Connect as shown.
- Be aware you should keep your antenna at least 2" away from any power wires to prevent interference.
- Run the antenna up the antenna tube as shown in your vehicles instructions.
- Warning: Be sure not to cut off any excess antenna wire, as it will shorten your operating range.

B) Servos:
- When installing the servos, refer to the manual of the vehicle for proper installation.
- Once your servos are correctly installed you will need to make sure they are properly centered. To do this, remove the servo horns and turn on your transmitter, then the power to your receiver. Remember; always turn your transmitter on first and off last. Failure to do so may result in loss of control and can damage your servos and/or linkage.
- Now that the power is on, check that the servos are working properly.
- You will now center the trim knobs on the transmitter and replace the horns so that they are centered.
- Be aware they may not be perfectly centered; this is OK, just get them as close as possible. Then use the trims for fine-tuning.

C) Battery:
- The AA receiver battery holder supplied with your radio should be used in a non-electric vehicle that requires two servos.
- Connect the AA Receiver battery holder to the power switch supplied, and then plug the switch into the "Batt" channel of the receiver for power.
- You will not need to connect this battery if you are using an electric car with an electronic speed control or mechanical speed control with BEC.