4. REPLACEMENT PARTS & ACCESSORIES

The following is a listing of replacement parts and accessories available for the Zebra radio series from your hobby dealer.

A. TX Antenna (#58005)
B. Neck strap (#58311)
C. Trainer cord (#58318)
D. Switch harness (#57215S)
E. Heavy duty gold pin switch harness (#54407) This can be removed
F. Stick extensions (#56381)
G. Flight Preserver (#58480)

5. PRECAUTIONS

- Always turn your transmitter on first and off last.
- Never operate your system without first performing a proper range check.
- FCC regulation in the USA prohibits changing the crystal in your transmitter. For channel changes send your system to an authorized service/repair center.
- Never fly around or over houses, people or power lines.
- Always charge your batteries before you fly.
- It's a good idea to check your receiver batteries with a tester This will verify the charge level in your receiver batteries.
- Always fly responsibly and respect the rights of others.
- Make sure your frequency is clear before turning on your system.

Congratulations again and have fun!

CE 0681 ⓘ
Austria, Belgium, Denmark, Finland, France, Germany, Greece, Iceland, Ireland, The Netherland, Italy, Spain, Norway, Portugal, United Kingdom, Luxembourg, Sweden, Switzerland

MADE IN THE PHILIPPINES

CONTENTS

Page 2.	1. Transmitter
	a. Features
Page 3	b. Layout
Page 4.	c. Servo Reversing
	d. Mixing (Aero only)
	e. Trim lever
	f. Reading the LED Battery Indicator
Page 5.	2. Battery Installation
Page 6.	3. Operation
	a. Installation of Receiver and Servos
	b. Transmitter, Receiver and Servo Settings
Page 7.	c. Simulator System
	d. Range checking
Page 8.	4. Replacement Parts & Accessories
	5. Precautions

Introduction

Thank you for purchasing the Zebra 3 FM digital proportional radio control system.
The Zebra 3 FM is easy to use and utilizes the latest in solid-state components for unsurpassed reliability and performance. It is important that you read and understand this manual before you operate your system.

1. TRANSMITTER

A. Features

- Ergonomically designed 3 channel FM transmitter.
- Precision gimbals.
- Neutral position adjustment for throttle
- SMT circuitry
- Servo reversing on CH1, CH2.
- CH1, CH2 Mixing. (Aero only)
- SIC(Simulating Interface Cable) Compatible
- Easy to read 1 LED battery indicators.
- Size: 174 x 168mm (6.85 x 6.61 in)
- Weight: 330g
- Power supply: 7.2V (6 cell) NiCd or NiMh battery or 6cell Dry battery

Zebra 3 FM Instruction Manual

B. Layout

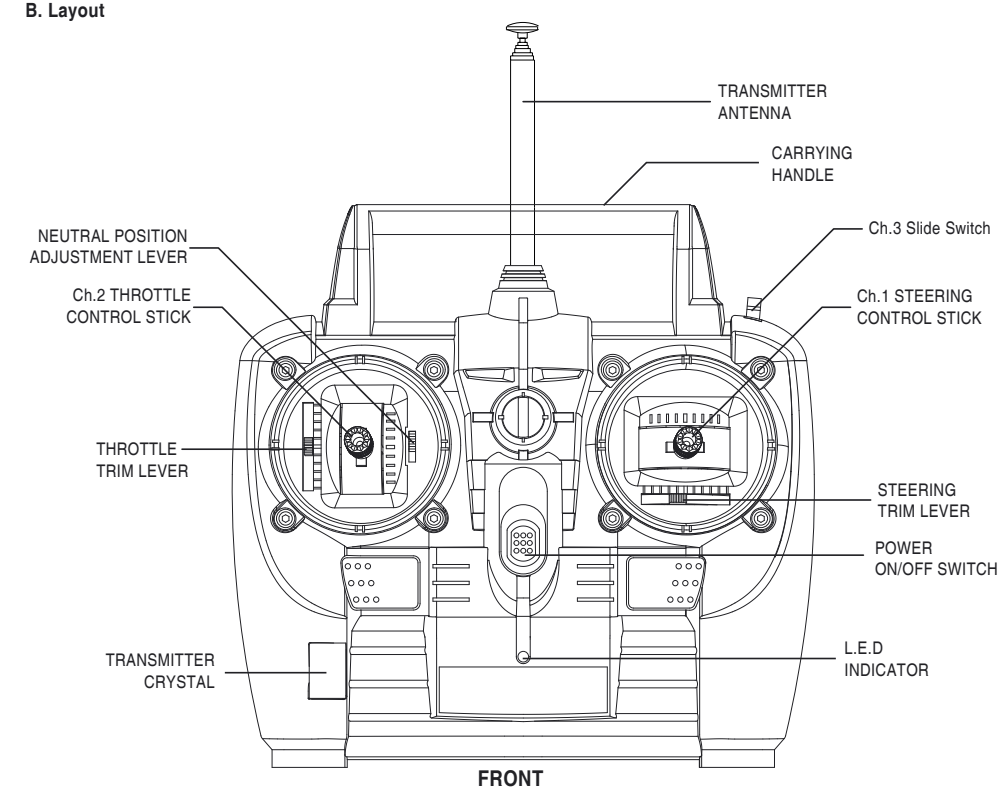

FRONT

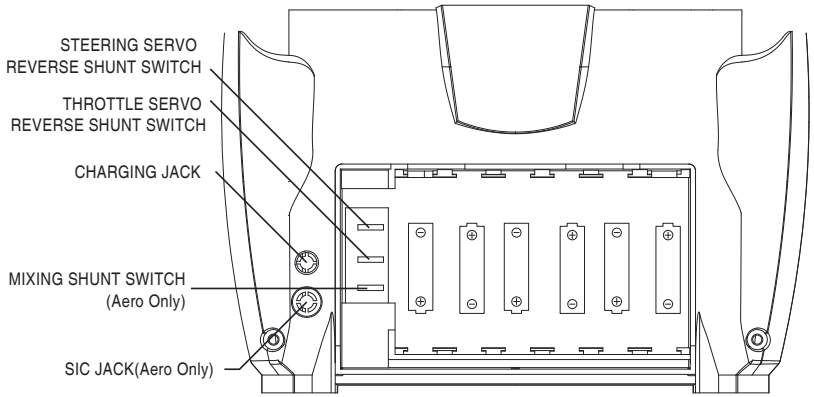

BACK

C. Servo Reversing
- The Zebra 3 FM transmitter is equipped with servo reversing on CH1, CH2.
- If you need to change travel direction of rotation, open the battery case and pull the shunt switch there should be a picture of how to do this and put it to the opposite side again.

D. Mixing (Aero version only)
- The Zebra 3 FM Aero transmitters is equipped with a switch that will mix CH1 and CH2 for Elevon /V-tail aircraft, or common flying wing type aircraft.
-Put the shunt switch into left side(ch1,2)
-If you don't need mixing, leave shunt switch in right side

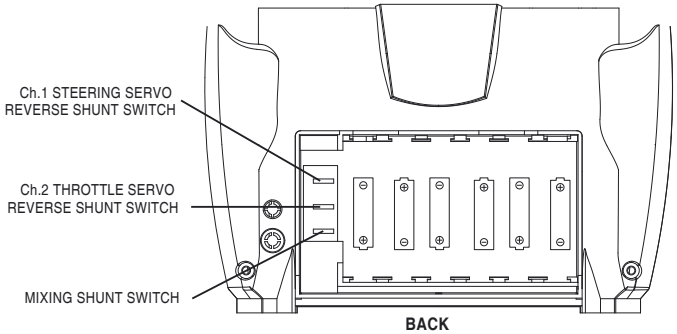

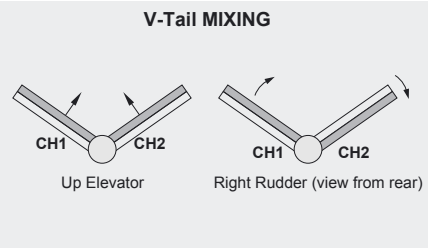

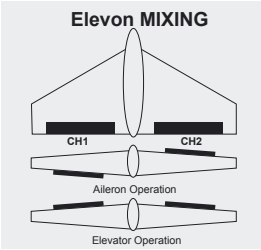

E. Trim Levers
- The trim levers associated with each control stick are used to correct or (trim-out) the tracking of the aircraft.
- Make sure that the trims will move the surface past neutral when moved to their extremes. This will assure you have adequate trim control.
- After your plane's first test flight, note the positions of the control surfaces that required trim. Next, center the trims and turn the receiver off. Now adjust the control linkage on the plane so the surfaces are in the same position before the trim levers were re-centered.
- Turn on the radio and receiver and recheck the control surfaces to ensure that all the corrections were applied in the proper direction.

F. Reading the LED Battery Indicator
- There is one indicator light on the face of the radio marked High (solid glowing LED) and Low (blinking LED).
- These relate to the condition of your transmitter battery. Please pay attention to these LEDs and stop flying when the LED light is blinking.

2. BATTERY INSTALLATION

1. The transmitter requires six and the receiver battery pack needs four AA size batteries. These can be Alkaline, Ni-cd or Ni-Mh cells
2. Always make sure that the receiver and transmitter are off before loading the battery.
3. Open the battery cover in the back of the transmitter.
4. Load batteries into the appropriate slots, install the batteries with correct polarity as shown.
5. Always return the battery cover first before turning the transmitter power on.

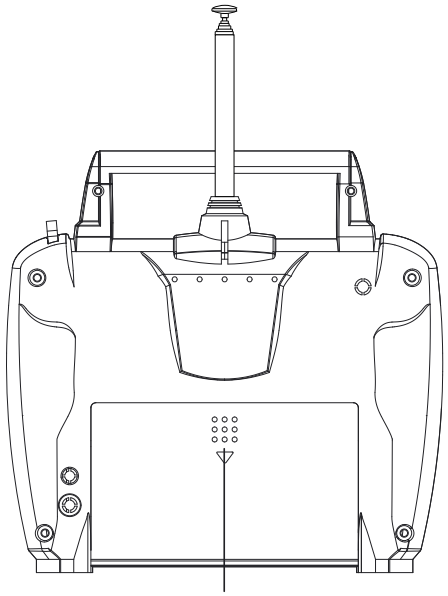

TO OPEN THE BATTERY COVER OF THE ZEBRA 3 FM, YOU NEED TO PRESS THIS AND PUSH IT DOWNWARD.

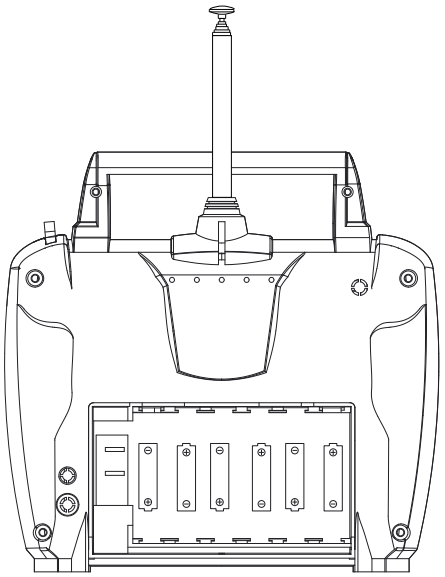

6 AA SIZE BATTERY MUST BE LOADED IN CORRECT POLARITY AS SHOWN

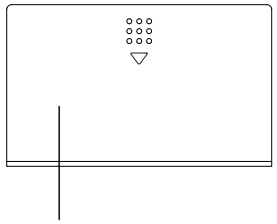

BATTERY COVER

3. OPERATION

A. Installation of Receiver and Servos

After connecting the receiver and servos as below illustration, turn on the power of the transmitter first then turn on the receiver. (Always turn your transmitter first and off last to prevent lost of control.)
Now, move the controls to see if the servos are moving properly. If not, check your wiring or crystals if the servos do not move at all.

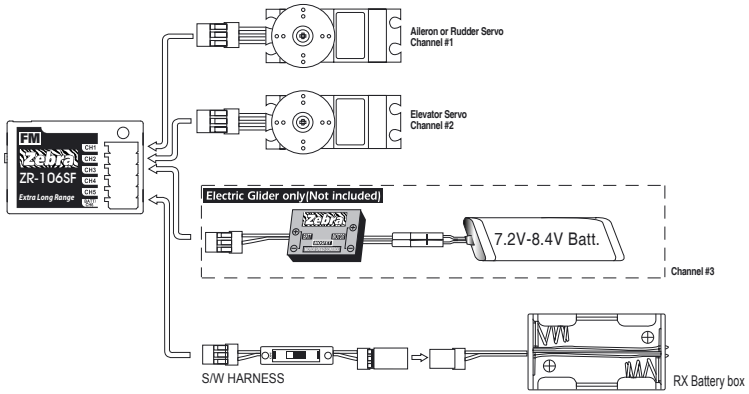

B. Transmitter, Receiver and Servo Settings

Checking Operation of the Servo

After installation of the servo and receiver into your model is complete,
turn on the transmitter (fully extend the antenna) now turn on the receiver.

Check to see if all servos are working properly.
If not, check the connections and/or make sure that the main battery pack is charged.

If the servos check out is fine, connect the linkage to the servo horns.
Check that the servos are moving in the correct direction.
If not, change the servo direction with the reversing shunt switches located on the bottom of the radio.
The 3rd channel of the Zebra 3 is not reversible.

If everything is checked out, turn off the receiver first, and then turn off the transmitter.

Warning!!! : Do not shorten the length of the receiver antenna by cutting off any excess wire.
This will severely affect the operating range and could result in injury to yourself and others.

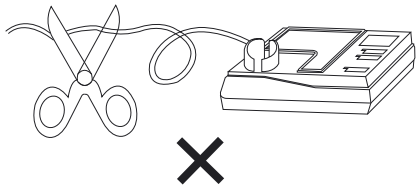

Elevator and Aileron Servo Trim Settings

- Trim Setting before Flight

The servo trim enables minor adjustment of the servo neutral position so that the plane will fly straight when the stick is in the center position. Before adjusting the servo trim, please make sure that when both the stick and the servo trim is in its center position (1) the servo arm is perpendicular to the push rods, and (2) the elevator and aileron of the plane is flush with the tail wing.

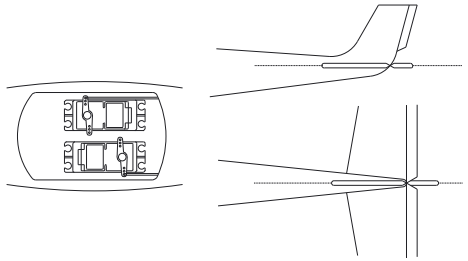

- Trim Setting during Flight

You may perform some minor trim adjustment during flight if the plane nose up or down (Elevator Trim) or sideways (Aileron Trim) when the stick is in the center position.
However please keep in mind that trim adjustment is only for minor adjustment and major adjustment should still be done through push rod (linkage) adjustment at the model.

Note: There is no trim adjustment on the 3rd channel of the Zebra 3

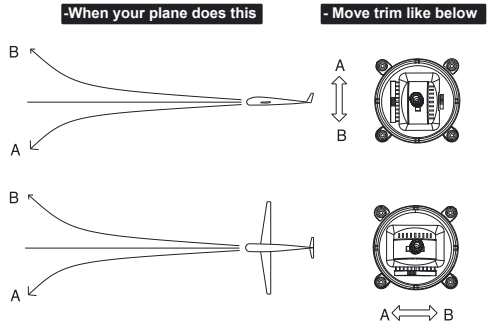

C. Simulator system (Aero version only)

- Zebra 3FM system is compatible with SIC (simulator interface cord- Part # 58318, not included) designed to work with the popular and free FMS flight simulator. (http://www.hitecrcd.com/product_fs.htm)

D. Range checking

- Always perform a range check before each operation.
- Perform range check by walking away from the aircraft with the transmitter antenna collapsed.
- You should have complete control from a distance of 60 - 90ft (20 - 30m).
- If the controls are erratic before the minimum distance is reached, do not fly until the problem is resolved.