4. Replacement Parts & Accessories

The following is a listing of replacement parts and accessories available for the Laser radio series from your hobby dealer.

A. TX Antenna (#58005)
B. Neck strap (#58311)
C. Trainer cord (#58310)
D. Switch harness (#57215S)
E. Heavy duty gold pin switch harness (#54407)
F. Stick extensions (#56381)
G. Flight Preserver (#58480)

5. Precautions

- Always turn your transmitter on first and off last.
- Never fly your airplane without first performing a proper range check.
- FCC regulation in the USA prohibits consumers from changing the crystal in the transmitter. For channel changes send your system to an authorized service/repair center.
- Never fly around or over houses, people or power lines.
- Always charge your batteries before you fly.
- It's a good idea to check your receiver batteries with a tester like the Hitec Power Mate II (part# 44110). This will verify the charge level in your receiver batteries.
- Always fly responsibly and respect the rights of others.
- Make sure your frequency is clear before turning on your system.

Congratulations again and have fun!

CE 0681 ①
Austria, Belgium, Denmark, Finland, France, Germany, Greece, Iceland, Ireland, The Netherland, Italy, Spain, Norway, Portugal, United Kingdom, Luxembourg, Sweden, Switzerland

Made in the Philippines

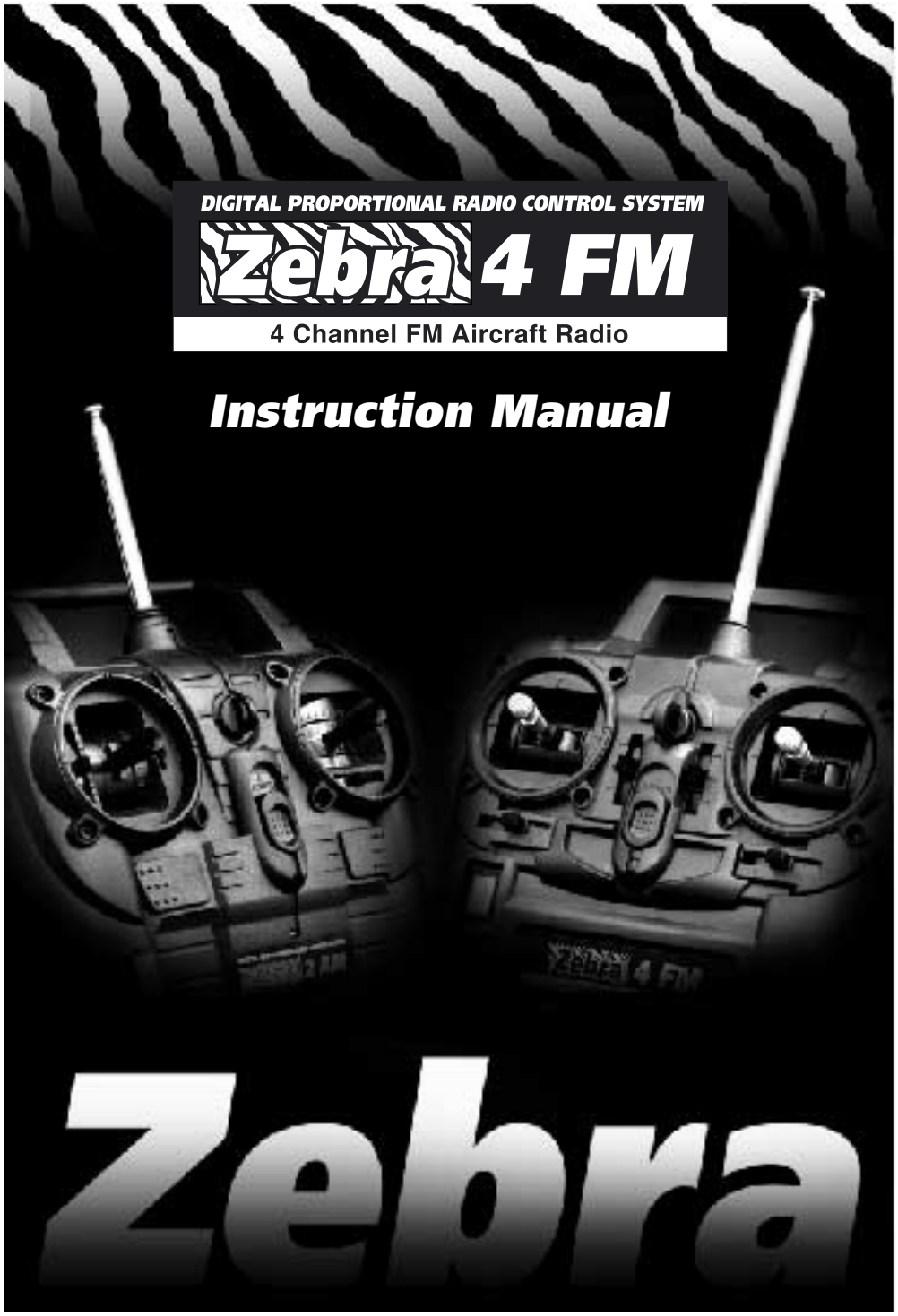

Introduction

Thank you for purchasing the Zebra 4 FM digital proportional radio control system. The Zebra 4 FM is easy to use and utilizes the latest in solid-state components for unsurpassed reliability and performance. It is important that you read and understand this manual before you attempt to operate your system

Table of Contents

Page 2.	Introduction
	Table of Contents
Page 3.	1. Transmitter
	a. Features
	b. Layout
Page 4.	c. Specifications
	d. Servo Reversing
	e. Control Stick Adjustment
	f. Stick Lever Tension Adjustment
Page 5.	g. Trim Lever
	h. Reading the LED Battery Indicator
	2. Battery Installation
Page 6.	3. Operation
	a. Installation of Receiver and Servos
Page 7.	b. Transmitter, Receiver and Servo Settings
	c. Trainer System
	d. Range Checking
	4. Replacement Parts & Accessories
Page 8.	5. Precautions

System Specifications

1. TRANSMITTER

A. Features

- Ergonomically designed 4 channel FM transmitter.
- High quality precision gimbals with adjustable stick length and tension.
- Servo reversing on all channels.
- Trainer system. (Slave mode only)
- Dry battery pack for six cells for Ni-Mh, Ni-cd, Alkaline battery
- Easy to read 1 LED battery indicators.
- SIC (Simulator Interface Cable) Compatible

B. Layout

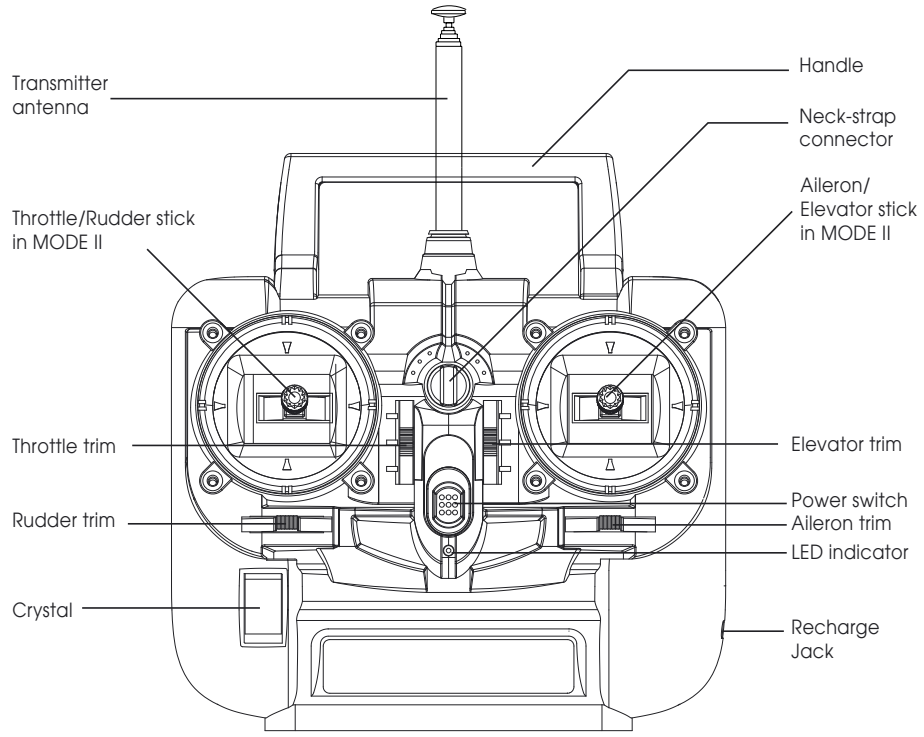

FRONT

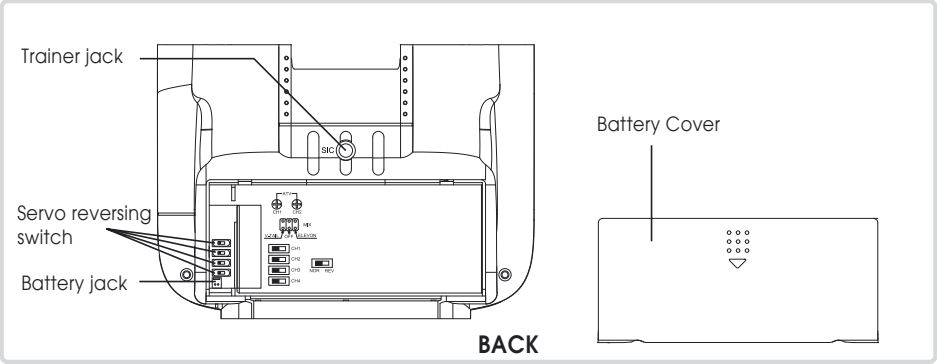

C. Specifications
- Power supply : 7.2V (6 cell) Ni-cad/ Ni-Mh battery or 9V 6cell Dry battery
- Current drain : 170mA
- Output power : 250mw
- Modulation : PPM (FM)

D. Servo Reversing
- The Zebra 4 FM transmitter is equipped with servo reversing on all channels.
- If you need to change travel direction of rotation, open the battery case and move the servo reversing switch.

E. Control Stick Adjustment
- The length of the non-slip control sticks can be adjusted to suit the requirements of the user.

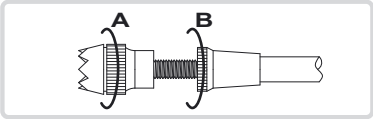

F. Stick Lever Tension Adjustment
- The unique open-stick assembly provides fully adjustable stick tension to adjust the feel of the sticks in your hands.
- You may adjust the stick tension of your sticks to provide the feel that you like for flying.
  To adjust your springs, you'll have to remove the rear case of the transmitter.
  Using a screwdriver, remove the six screws that hold the transmitter's rear cover into position, and put them in a safe place. Gently ease off the transmitter's rear cover and move it to the under side of the transmitter, carefully turning it as you would turn the page of a book.
  Now you'll see the view shown in the illustration.
  Using a small Philips screwdriver, rotate the adjusting screw for each stick for the desired spring tension.
  The tension increases when the adjusting screw is turned clockwise, and decreases for counterclockwise motion.
  When you are satisfied with the spring tensions, you may close the transmitter.
  Very carefully reinstall the rear cover. When the cover is properly in place, tighten the six screws.

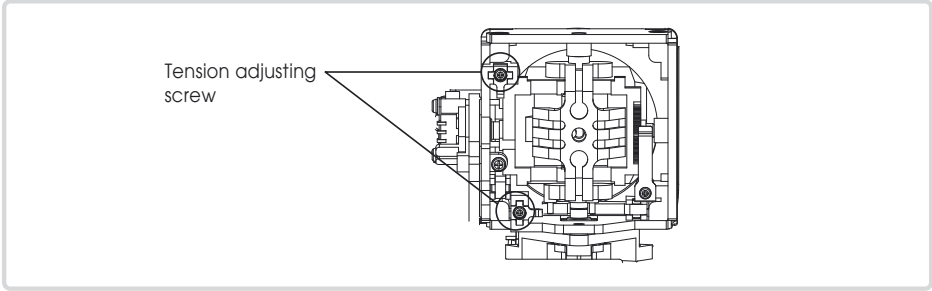

ZEBRA 4 Stick Lever Tension

G. Trim Levers
- The trim levers associated with each control stick are used to correct or (trim-out) the tracking of the aircraft.
- (Caution) Make sure the trims will move the surface past neutral when moved to their extremes. This will assure you have adequate trim control.
- After your plane's first test flight, note the positions of the control surfaces that required trim. Next, center the trims and turn the receiver off. Now adjust the control linkage on the plane so the surfaces are in the same position before the trim levers were re-centered.
- Turn on the radio and receiver and recheck the control surfaces to ensure that all the corrections were applied in the proper direction.

H. Reading the LED Battery Indicator
-There is one indicator lights on the face of the radio marked High and Low (blinking).
-These relate to the condition of your transmitter battery. Please pay attention to these LED lights and stop flying when the LED light is blinking.

2. BATTERY INSTALLATION

- The transmitter requires six and the receiver battery pack needs four AA size batteries. These can be Alkaline, Ni-cad or Ni-Mh cells
- When loading the batteries, make sure the receiver and transmitter switches are in the "off" position.
- Open the battery door in the back of the transmitter by pressing the tab on the bottom of the battery door and lifting up.
- Load batteries into the appropriate slots, taking care to install according to the proper polarity.
- Replace the battery door and turn the power "on".

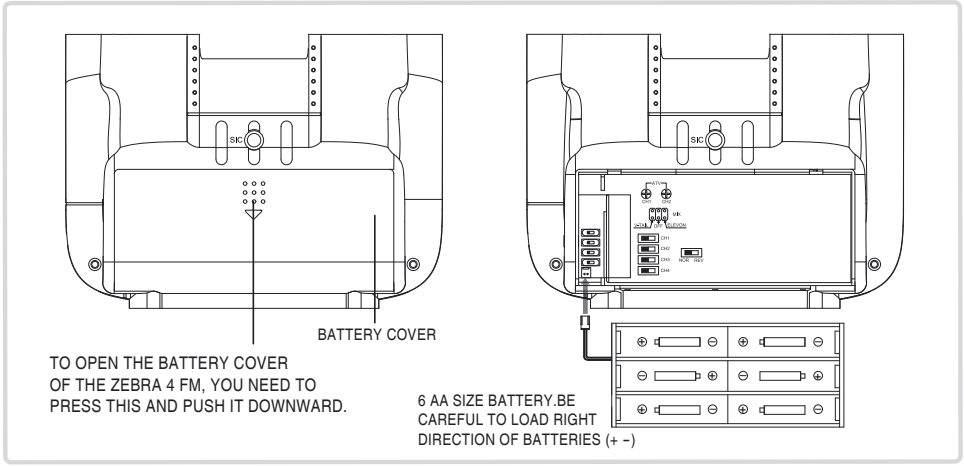

3. Operation

A. Installation of Receiver and Servos

After connecting the receiver and servos as below illustration,
turn on the power of the transmitter first then turn on the receiver.
(Always turn your transmitter first and off last to prevent lost of control.)
Now, move the controls to see if the servos are moving properly.
If not, check your wiring or crystals if the servos do not move at all.

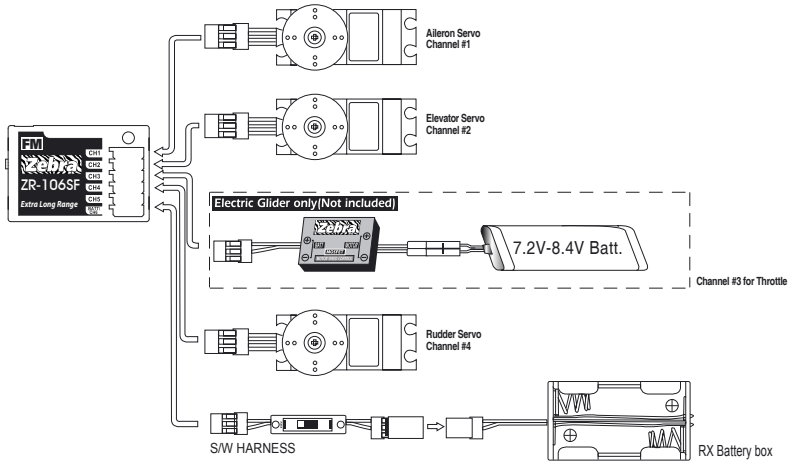

B. Transmitter, Receiver and Servo Settings

Checking Operation of the Servo

After installation of the servo and receiver into your model is complete,
turn on the transmitter (fully extend the antenna) now turn on the receiver.

Check to see if all servos are working properly.
If not, check the connections and/or make sure that the main battery pack is charged.

If the servos check out is fine, connect the linkage to the servo horns.
Check that the servos are moving in the correct direction.
If not, change the servo direction with the reversing switches located on the bottom of the radio.

If everything is checked out, turn off the receiver first, and then turn off the transmitter.

Warning!!! : Do not shorten the length of the receiver antenna by cutting off any excess wire.
This will severely affect the operating range and could result in injury to yourself and others.

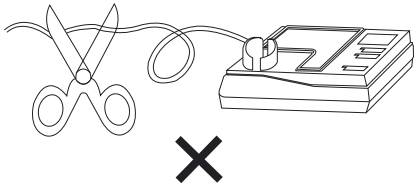

C. Trainer system

- The Zebra 4 FM is equipped with a trainer system. (Slave mode only)
- Use trainer cord. (Not included) Include the part number of the trainer cord for this radio system
- When setting up the trainer system, make sure the student's transmitter is set up properly so the trims and servo reversing are the same as the master.
- To activate the trainer system and transfer control to the student, pull and hold the trainer switch located on the top left of the Master's transmitter. Releasing the switch will restore immediate control back to the master.
- Trainer system is compatible with SIC (simulator interface cord- Part # 58318, not included) designed to work with the popular and free FMS flight simulator. (http://www.hitecrcd.com/product_fs.htm)

D. Range checking

- Always perform a range check before each operation.
- Perform range check by walking away from the aircraft with the transmitter antenna collapsed.
- You should have complete control from a distance of 60 - 90ft (20 - 30m).
- If the controls are erratic before the minimum distance is reached, do not fly until the problem is resolved.