# APPENDIX B: DIPOLE VALIDATION

# PCTEST ENGINEERING LABORATORY, INC.

**DUT: Dipole 835 MHz; Type: D835V2; Serial: 4d047**

Communication System: CW; Frequency: 835 MHz;Duty Cycle: 1:1
Medium: 835 Head; Medium parameters used:
f = 835 MHz; $\sigma$ = 0.882 mho/m; $\varepsilon_r$ = 40.4; $\rho$ = 1000 kg/m$^3$

Phantom section: Flat Section; Space: 1.5 cm

Test Date: 04-20-2011; Ambient Temp: 24.5 °C; Tissue Temp: 22.9 °C

Probe: ES3DV2 - SN3022; ConvF(6.02, 6.02, 6.02); Calibrated: 9/21/2010
Sensor-Surface: 4mm (Mechanical Surface Detection)
Electronics: DAE4 Sn704; Calibrated: 3/17/2011
Phantom: SAM with CRP; Type: SAM; Serial: TP1375
Measurement SW: DASY4, V4.7 Build 80; Postprocessing SW: SEMCAD, V1.8 Build 186

## 835MHz System Verification

**Area Scan (7x13x1):** Measurement grid: dx=15mm, dy=15mm
**Zoom Scan (5x5x7)/Cube 0:** Measurement grid: dx=8mm, dy=8mm, dz=5mm

Input Power = 24.0 dBm (250 mW)
**SAR(1 g) = 2.4 mW/g; SAR(10 g) = 1.56 mW/g**
Deviation = 0.73 %

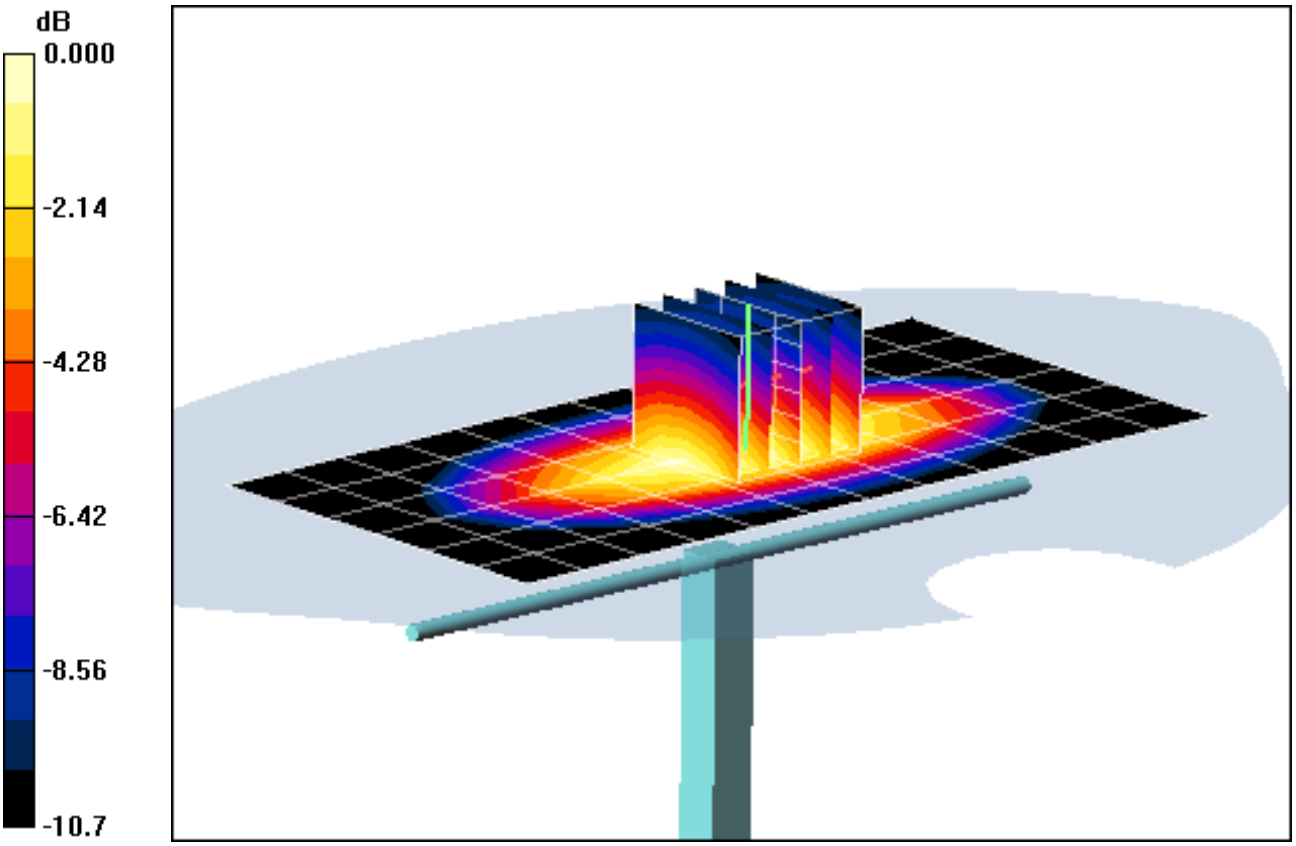


0 dB = 2.58mW/g

# PCTEST ENGINEERING LABORATORY, INC.

**DUT: Dipole 835 MHz; Type: D835V2; Serial: 4d047**

Communication System: CW; Frequency: 835 MHz;Duty Cycle: 1:1
Medium: 835 Body Medium parameters used:
f = 835 MHz; $\sigma$ = 0.933 mho/m; $\varepsilon_r$ = 52.46; $\rho$ = 1000 kg/m$^3$
Phantom section: Flat Section; Space: 1.5 cm

Test Date: 04-25-2011; Ambient Temp: 23.8 °C; Tissue Temp: 22.6 °C

Probe: EX3DV4 - SN3561; ConvF(8.09, 8.09, 8.09); Calibrated: 8/19/2010
Sensor-Surface: 4mm (Mechanical Surface Detection)
Electronics: DAE4 Sn649; Calibrated: 2/21/2011
Phantom: SAM Main; Type: SAM 4.0; Serial: TP-1406
Measurement SW: DASY4, V4.7 Build 80; Postprocessing SW: SEMCAD, V1.8 Build 186

## 835MHz System Verification

**Area Scan (7x13x1):** Measurement grid: dx=15mm, dy=15mm
**Zoom Scan (5x5x7)/Cube 0:** Measurement grid: dx=8mm, dy=8mm, dz=5mm
Input Power = 18.0 dBm (63 mW)
**SAR(1 g) = 0.634 mW/g; SAR(10 g) = 0.415 mW/g**
Deviation = 2.17 %

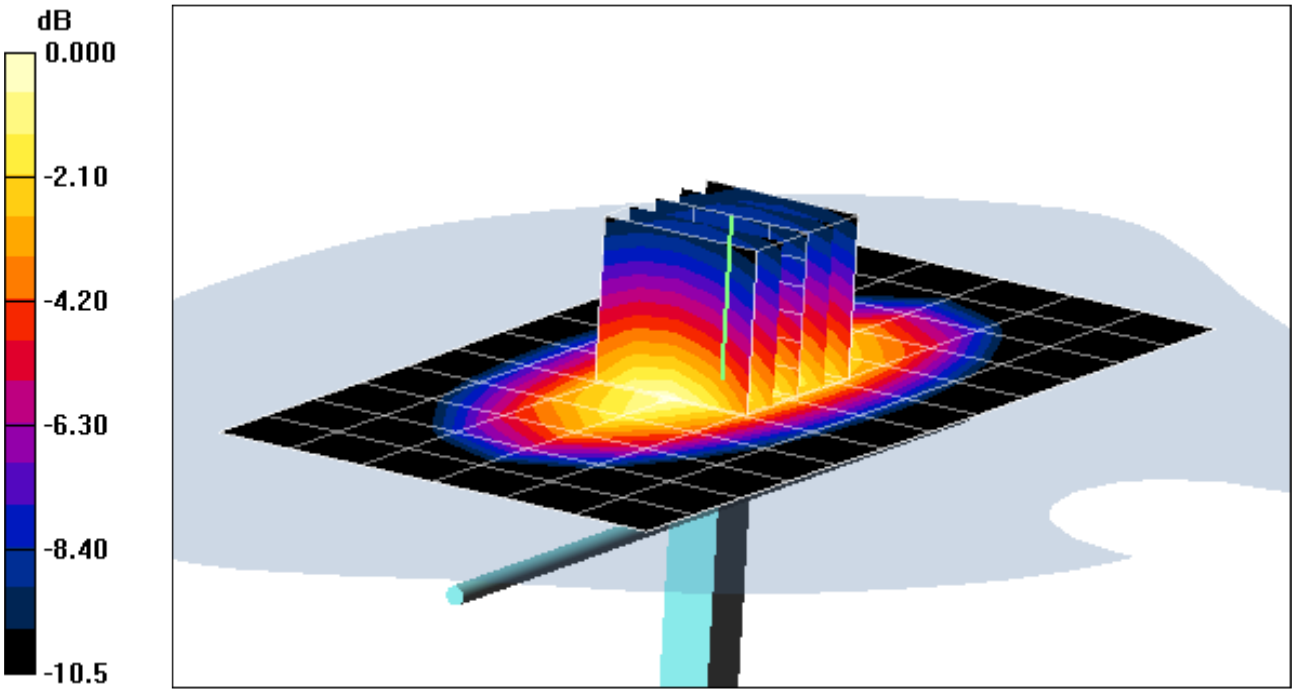


0 dB = 0.683mW/g

# PCTEST ENGINEERING LABORATORY, INC.

**DUT: Dipole 835 MHz; Type: D835V2; Serial: 4d047**

Communication System: CW; Frequency: 835 MHz;Duty Cycle: 1:1
Medium: 835 Body Medium parameters used:
f = 835 MHz; $\sigma$ = 0.958 mho/m; $\varepsilon_r$ = 52.51; $\rho$ = 1000 kg/m$^3$
Phantom section: Flat Section; Space: 1.5 cm

Test Date: 04-29-2011; Ambient Temp: 23.9 °C; Tissue Temp: 22.0 °C

Probe: EX3DV4 - SN3561; ConvF(8.09, 8.09, 8.09); Calibrated: 8/19/2010
Sensor-Surface: 4mm (Mechanical Surface Detection)
Electronics: DAE4 Sn649; Calibrated: 2/21/2011
Phantom: SAM Main; Type: SAM 4.0; Serial: TP-1406
Measurement SW: DASY4, V4.7 Build 80; Postprocessing SW: SEMCAD, V1.8 Build 186

## 835MHz System Verification

**Area Scan (7x13x1):** Measurement grid: dx=15mm, dy=15mm
**Zoom Scan (5x5x7)/Cube 0:** Measurement grid: dx=8mm, dy=8mm, dz=5mm
Input Power = 18.0 dBm (63 mW)
**SAR(1 g) = 0.651 mW/g; SAR(10 g) = 0.426 mW/g**
Deviation = 4.91 %

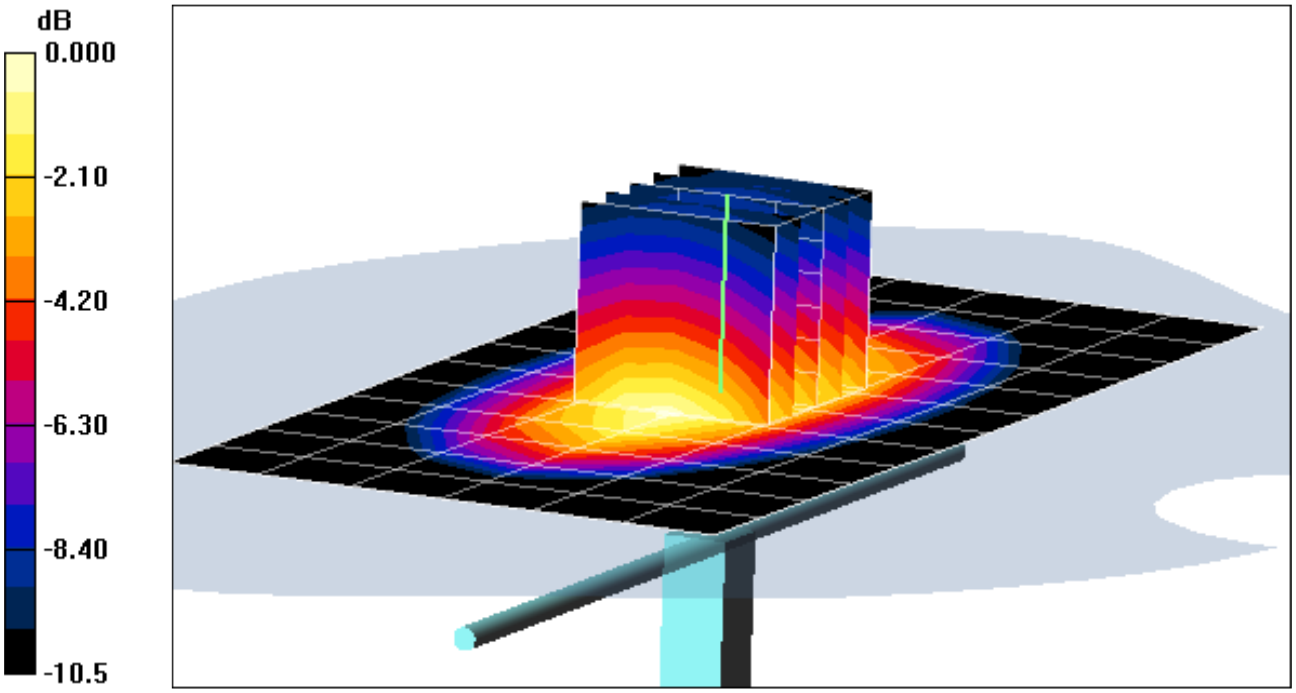


0 dB = 0.701mW/g

# PCTEST ENGINEERING LABORATORY, INC.

**DUT: SAR Dipole 1900 MHz; Type: D1900V2; Serial: 502**

Communication System: CW; Frequency: 1900 MHz;Duty Cycle: 1:1
Medium: 1900 Head Medium parameters used (interpolated):
f = 1900 MHz; $\sigma$ = 1.45 mho/m; $\varepsilon_r$ = 40.7; $\rho$ = 1000 kg/m$^3$
Phantom section: Flat Section; Space: 1.0 cm

Test Date: 04-21-2011; Ambient Temp: 22.9°C; Tissue Temp: 21.4°C

Probe: EX3DV4 - SN3550; ConvF(7.01, 7.01, 7.01); Calibrated: 2/14/2011
Sensor-Surface: 4mm (Mechanical Surface Detection)
Electronics: DAE4 Sn859; Calibrated: 7/8/2010
Phantom: SAM Main; Type: SAM 4.0; Serial: TP-1114
Measurement SW: DASY4, V4.7 Build 80; Postprocessing SW: SEMCAD, V1.8 Build 186

## 1900MHz System Verification

**Area Scan (5x7x1):** Measurement grid: dx=15mm, dy=15mm
**Zoom Scan (5x5x7)/Cube 0:** Measurement grid: dx=8mm, dy=8mm, dz=5mm

Input Power = 16 dBm (40 mW)
**SAR(1 g) = 1.62 mW/g; SAR(10 g) = 0.830 mW/g**
Deviation = 0.75 %

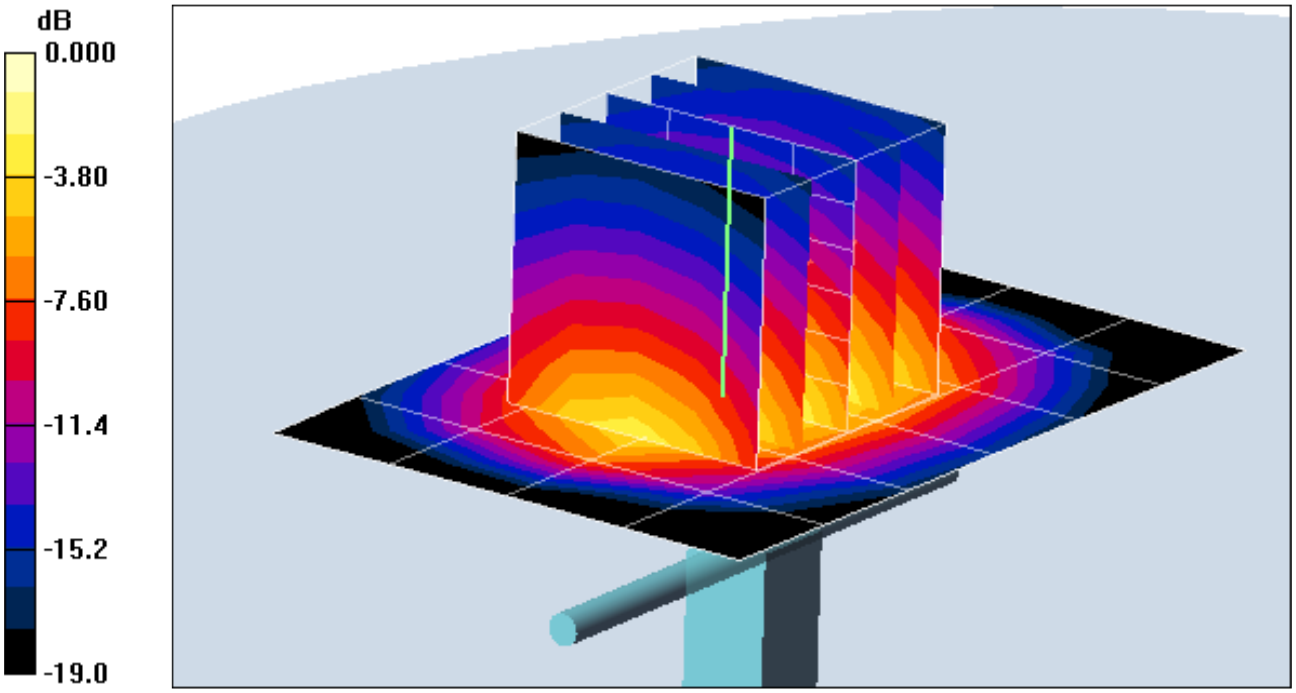


0 dB = 1.79mW/g

# PCTEST ENGINEERING LABORATORY, INC.

**DUT: SAR Dipole 1900 MHz; Type: D1900V2; Serial: 502**

Communication System: CW; Frequency: 1900 MHz;Duty Cycle: 1:1
Medium: 1900 Body Medium parameters used (interpolated):
f = 1900 MHz; $\sigma$ = 1.53 mho/m; $\varepsilon_r$ = 52.6; $\rho$ = 1000 kg/m$^3$
Phantom section: Flat Section; Space: 1.0 cm

Test Date: 04-25-2011; Ambient Temp: 23.7 °C; Tissue Temp: 22.1 °C

Probe: EX3DV4 - SN3561; ConvF(6.59, 6.59, 6.59); Calibrated: 8/19/2010
Sensor-Surface: 4mm (Mechanical Surface Detection)
Electronics: DAE4 Sn649; Calibrated: 2/21/2011
Phantom: SAM Sub; Type: SAM 4.0; Serial: TP-1403
Measurement SW: DASY4, V4.7 Build 80; Postprocessing SW: SEMCAD, V1.8 Build 186

## 1900MHz System Verification

**Area Scan (5x7x1):** Measurement grid: dx=15mm, dy=15mm
**Zoom Scan (5x5x7)/Cube 0:** Measurement grid: dx=8mm, dy=8mm, dz=5mm
Input Power = 16 dBm (40 mW)
**SAR(1 g) = 1.67 mW/g; SAR(10 g) = 0.863 mW/g**
Deviation = 1.58 %

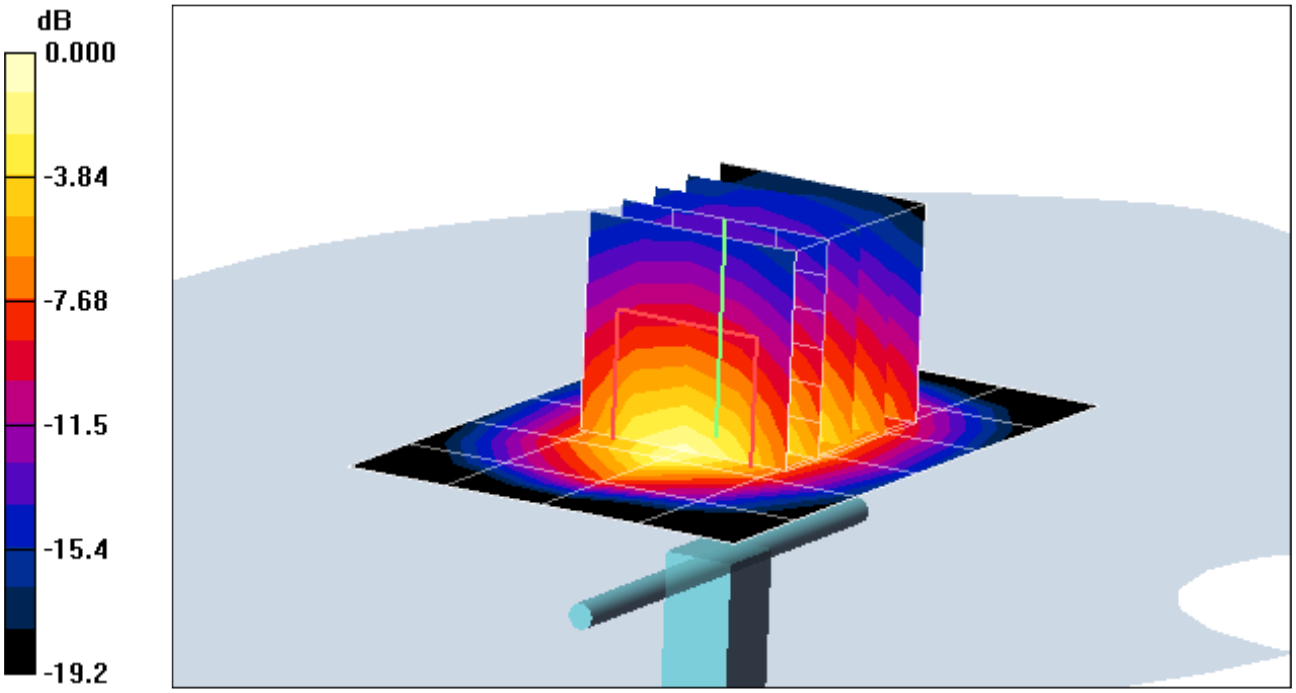


0 dB = 1.89mW/g

# PCTEST ENGINEERING LABORATORY, INC.

**DUT: SAR Dipole 1900 MHz; Type: D1900V2; Serial: 502**

Communication System: CW; Frequency: 1900 MHz;Duty Cycle: 1:1
Medium: 1900 Body Medium parameters used (interpolated):
f = 1900 MHz; $\sigma$ = 1.51 mho/m; $\varepsilon_r$ = 52.6; $\rho$ = 1000 kg/m$^3$
Phantom section: Flat Section; Space: 1.0 cm

Test Date: 07-18-2011; Ambient Temp: 24.1°C; Tissue Temp: 22.8°C

Probe: ES3DV2 - SN3022; ConvF(4.34, 4.34, 4.34); Calibrated: 9/21/2010
Sensor-Surface: 4mm (Mechanical Surface Detection)
Electronics: DAE4 Sn704; Calibrated: 3/17/2011
Phantom: SAM with CRP; Type: SAM; Serial: TP1375
Measurement SW: DASY4, V4.7 Build 80; Postprocessing SW: SEMCAD, V1.8 Build 186

## 1900MHz System Verification

**Area Scan (5x7x1):** Measurement grid: dx=15mm, dy=15mm
**Zoom Scan (5x5x7)/Cube 0:** Measurement grid: dx=8mm, dy=8mm, dz=5mm
Input Power = 20.0 dBm (100 mW)
**SAR(1 g) = 3.94 mW/g; SAR(10 g) = 2.09 mW/g**
Deviation = -4.14 %

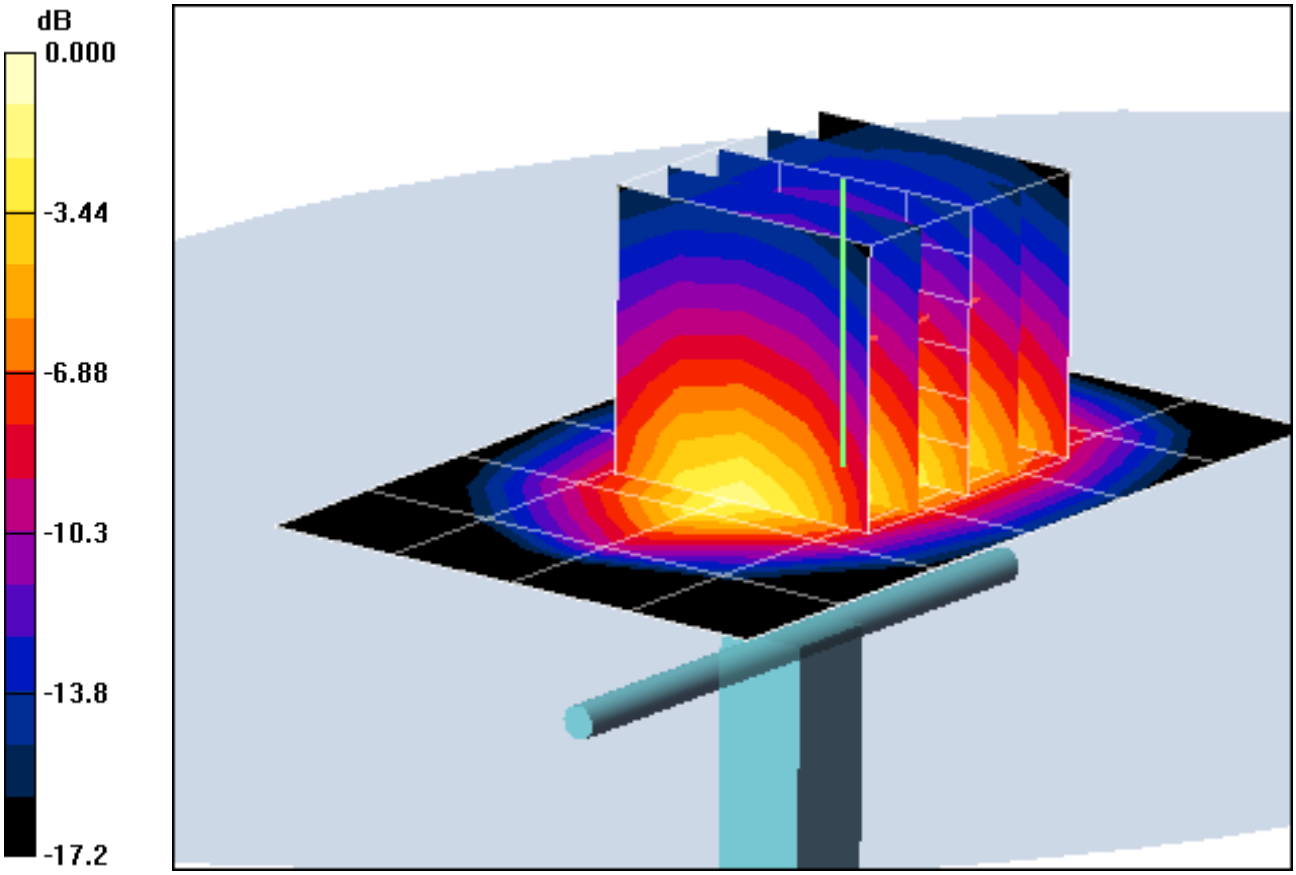


0 dB = 4.45mW/g

# PCTEST ENGINEERING LABORATORY, INC.

**DUT: SAR Dipole 1900 MHz; Type: D1900V2; Serial: 502**

Communication System: CW; Frequency: 1900 MHz;Duty Cycle: 1:1
Medium: 1900 Head Medium parameters used (interpolated):
f = 1900 MHz; $\sigma$ = 1.52 mho/m; $\varepsilon_r$ = 53.2; $\rho$ = 1000 kg/m$^3$
Phantom section: Flat Section; Space: 1.0 cm

Test Date: 07-20-2011; Ambient Temp: 24.8 °C ; Tissue Temp: 23.2 °C

Probe: ES3DV2 - SN3022; ConvF(4.34, 4.34, 4.34); Calibrated: 9/21/2010
Sensor-Surface: 4mm (Mechanical Surface Detection)
Electronics: DAE4 Sn704; Calibrated: 3/17/2011
Phantom: SAM Sub Dasy B; Type: SAM 4.0; Serial: TP-1626
Measurement SW: DASY4, V4.7 Build 80; Postprocessing SW: SEMCAD, V1.8 Build 186

## 1900MHz System Verification

**Area Scan (5x7x1):** Measurement grid: dx=15mm, dy=15mm
**Zoom Scan (5x5x7)/Cube 0:** Measurement grid: dx=8mm, dy=8mm, dz=5mm
Input Power = 20.0 dBm (100 mW)
**SAR(1 g) = 4.3 mW/g; SAR(10 g) = 2.3 mW/g**
Deviation = 4.62%

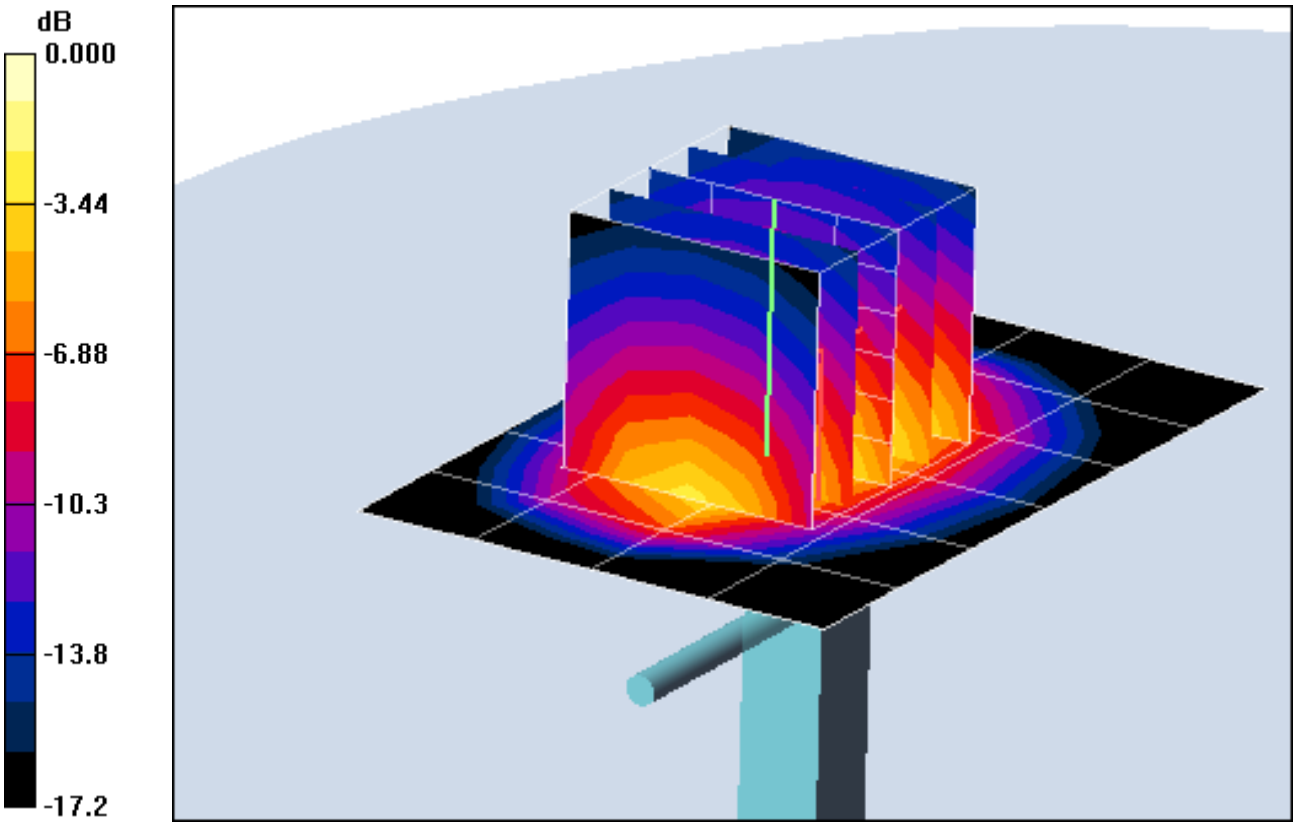


0 dB = 4.88mW/g

# PCTEST ENGINEERING LABORATORY, INC.

**DUT: SAR Dipole 2450 MHz; Type: D2450V2; Serial: 719**

Communication System: CW; Frequency: 2450 MHz;Duty Cycle: 1:1
Medium: 2450 Head Medium parameters used:
f = 2450 MHz; $\sigma$ = 1.83 mho/m; $\varepsilon_r$ = 38.7; $\rho$ = 1000 kg/m$^3$
Phantom section: Flat Section; Space: 1.0 cm

Test Date: 04-19-2011; Ambient Temp: 24.1°C; Tissue Temp: 23.5 °C

Probe: ES3DV2 - SN3022; ConvF(4.21, 4.21, 4.21); Calibrated: 9/21/2010
Sensor-Surface: 3mm (Mechanical Surface Detection)
Electronics: DAE4 Sn704; Calibrated: 3/17/2011
Phantom: SAM with CRP; Type: SAM; Serial: TP1375
Measurement SW: DASY4, V4.7 Build 80; Postprocessing SW: SEMCAD, V1.8 Build 186

## 2450MHz System Verification

**Area Scan (5x7x1):** Measurement grid: dx=15mm, dy=15mm
**Zoom Scan (5x5x7)/Cube 0:** Measurement grid: dx=8mm, dy=8mm, dz=5mm
Input Power = 12 dBm (15.8 mW)
**SAR(1 g) = 0.838 mW/g; SAR(10 g) = 0.391 mW/g**
Deviation = -0.86 %

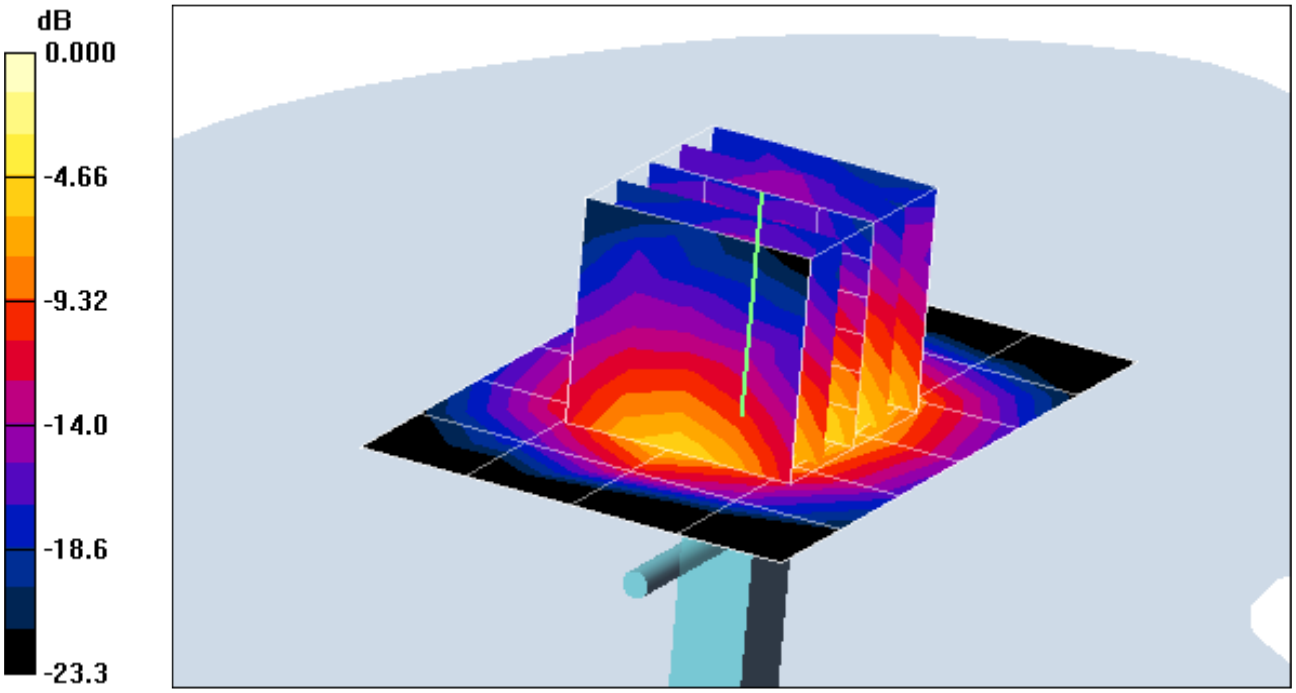


0 dB = 1.08mW/g

# PCTEST ENGINEERING LABORATORY, INC.

**DUT: SAR Dipole 2450 MHz; Type: D2450V2; Serial: 719**

Communication System: CW; Frequency: 2450 MHz;Duty Cycle: 1:1
Medium: 2450 Body Medium parameters used:
f = 2450 MHz; $\sigma$ = 2.01 mho/m; $\varepsilon_r$ = 50.9; $\rho$ = 1000 kg/m$^3$
Phantom section: Flat Section; Space: 1.0 cm

Test Date: 04-18-2011; Ambient Temp: 24.1 ° C; Tissue Temp: 23.0 °C

Probe: ES3DV2 - SN3022; ConvF(4.06, 4.06, 4.06); Calibrated: 9/21/2010
Sensor-Surface: 3mm (Mechanical Surface Detection)
Electronics: DAE4 Sn704; Calibrated: 3/17/2011
Phantom: SAM with CRP; Type: SAM; Serial: TP1375
Measurement SW: DASY4, V4.7 Build 80; Postprocessing SW: SEMCAD, V1.8 Build 186

## 2450MHz System Verification

**Area Scan (5x7x1):** Measurement grid: dx=15mm, dy=15mm
**Zoom Scan (5x5x7)/Cube 0:** Measurement grid: dx=8mm, dy=8mm, dz=5mm
Input Power = 12.0 dBm (15.8 mW)
**SAR(1 g) = 0.859 mW/g; SAR(10 g) = 0.390 mW/g**
Deviation = 5.77 %

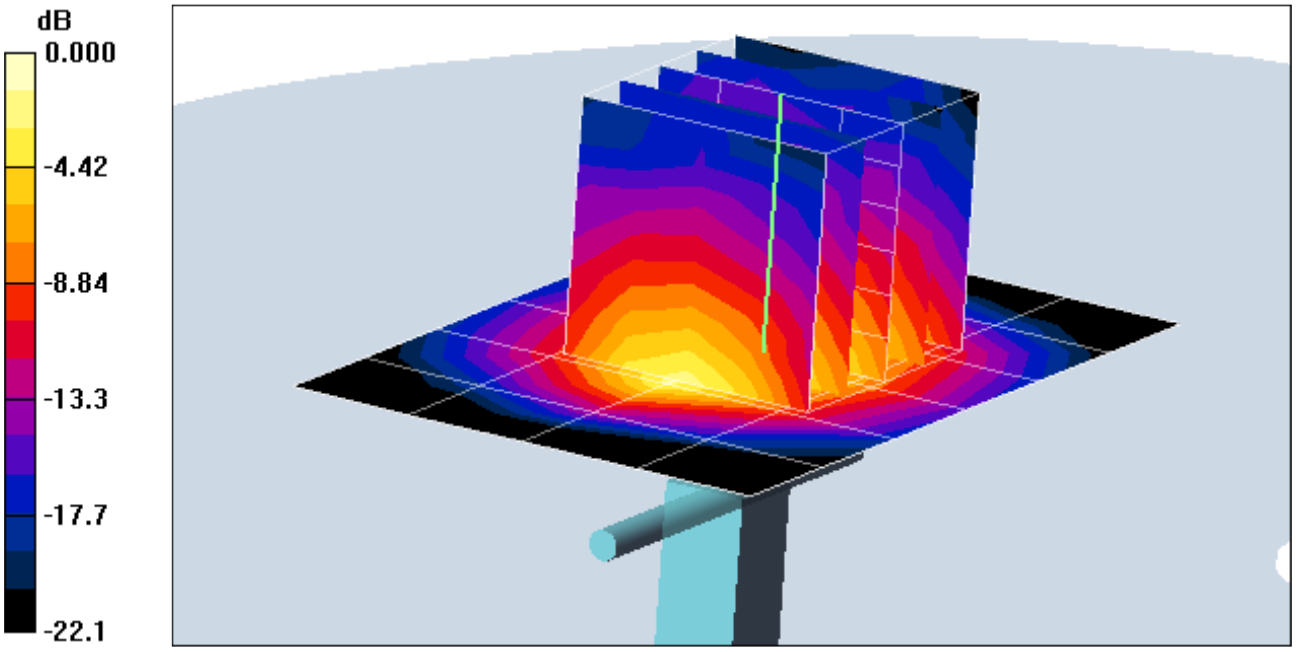


0 dB = 1.12mW/g

# PCTEST ENGINEERING LABORATORY, INC.

**DUT: SAR Dipole 2600 MHz; Type: D2600V2; Serial: 1027**

Communication System: CW; Frequency: 2600 MHz;Duty Cycle: 1:1
Medium: 2500 Head Medium parameters used:
f = 2600 MHz; $\sigma$ = 1.98 mho/m; $\varepsilon_r$ = 37.25; $\rho$ = 1000 kg/m$^3$
Phantom section: Flat Section; Space: 1.0 cm

Test Date: 04-27-2011; Ambient Temp: 24.1 °C; Tissue Temp: 22.8 °C

Probe: ES3DV2 - SN3022; ConvF(4.14, 4.14, 4.14); Calibrated: 9/21/2010
Sensor-Surface: 3mm (Mechanical Surface Detection)
Electronics: DAE4 Sn704; Calibrated: 3/17/2011
Phantom: SAM with CRP; Type: SAM; Serial: TP1375
Measurement SW: DASY4, V4.7 Build 80; Postprocessing SW: SEMCAD, V1.8 Build 186

## 2600MHz System Verification

**Area Scan (5x7x1):** Measurement grid: dx=15mm, dy=15mm
**Zoom Scan (5x5x7)/Cube 0:** Measurement grid: dx=8mm, dy=8mm, dz=5mm
Deviation = 12.0 dBm (15.8 mW)
**SAR(1 g) = 0.920 mW/g; SAR(10 g) = 0.409 mW/g**
Deviation = 1.44 %

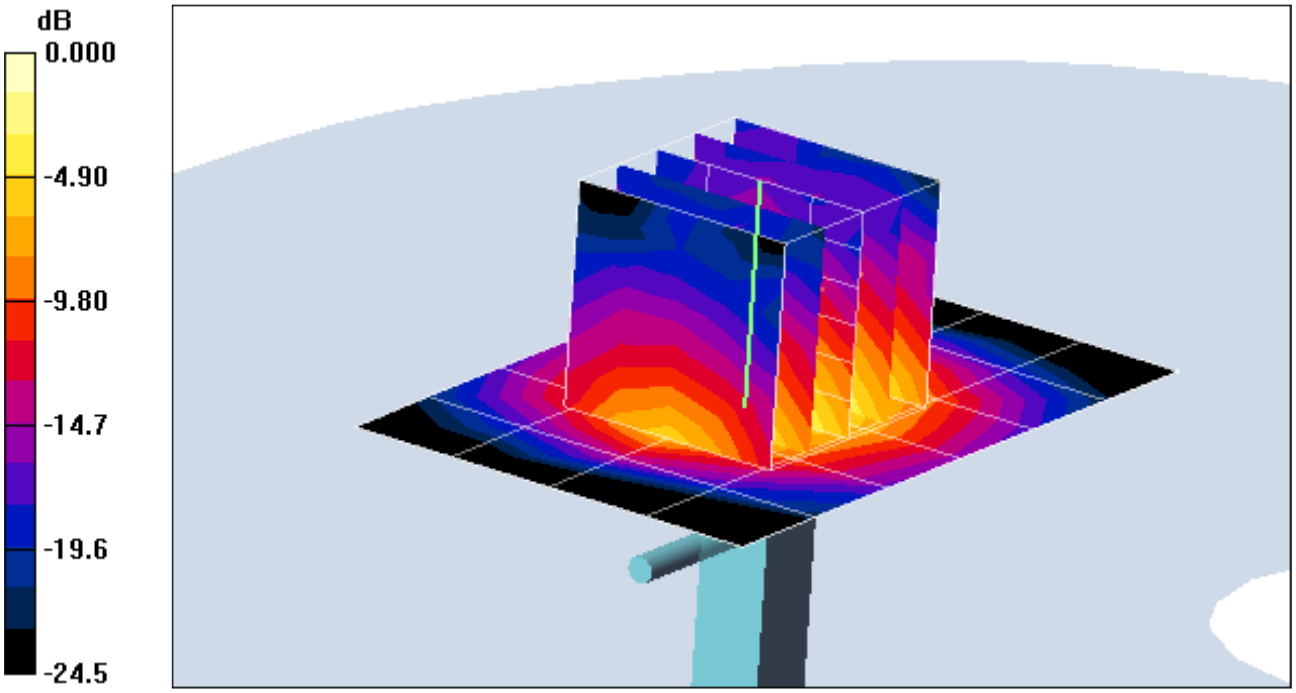


0 dB = 1.19mW/g

# PCTEST ENGINEERING LABORATORY, INC.

**DUT: SAR Dipole 2600 MHz; Type: D2600V2; Serial: 1027**

Communication System: CW; Frequency: 2600 MHz;Duty Cycle: 1:1
Medium: 2500 Body Medium parameters used:
f = 2600 MHz; $\sigma$ = 2.227 mho/m; $\varepsilon_r$ = 49.92; $\rho$ = 1000 kg/m$^3$
Phantom section: Flat Section; Space: 1.0 cm

Test Date: 04-26-2011; Ambient Temp: 24.9 °C; Tissue Temp: 23.1 °C

Probe: ES3DV2 - SN3022; ConvF(4.06, 4.06, 4.06); Calibrated: 9/21/2010
Sensor-Surface: 3mm (Mechanical Surface Detection)
Electronics: DAE4 Sn704; Calibrated: 3/17/2011
Phantom: SAM with CRP; Type: SAM; Serial: TP1375
Measurement SW: DASY4, V4.7 Build 80; Postprocessing SW: SEMCAD, V1.8 Build 186

## 2600MHz System Verification

**Area Scan (5x7x1):** Measurement grid: dx=15mm, dy=15mm
**Zoom Scan (5x5x7)/Cube 0:** Measurement grid: dx=8mm, dy=8mm, dz=5mm
Input Power = 12.0 dBm (15.8 mW)
**SAR(1 g) = 0.923 mW/g; SAR(10 g) = 0.412 mW/g**
Deviation = -0.48%

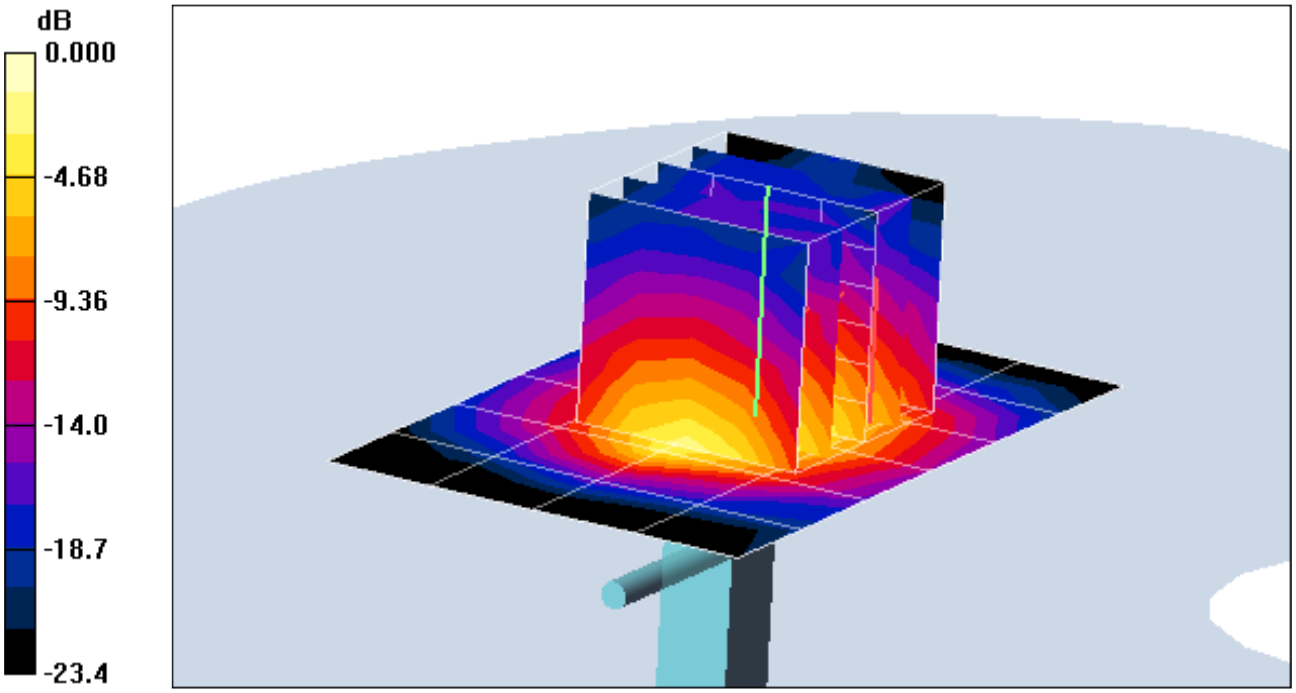


0 dB = 1.20mW/g

# APPENDIX C: PROBE CALIBRATION

**Calibration Laboratory of**
Schmid & Partner
Engineering AG
**Zeughausstrasse 43, 8004 Zurich, Switzerland**

**S** Schweizerischer Kalibrierdienst
**C** Service suisse d'étalonnage
Servizio svizzero di taratura
**S** Swiss Calibration Service

Accredited by the Swiss Accreditation Service (SAS)
**The Swiss Accreditation Service is one of the signatories to the EA Multilateral Agreement for the recognition of calibration certificates**

**Accreditation No.: SCS 108**

**Client** PC Test

**Certificate No: ES3-3022_Sep10**

# CALIBRATION CERTIFICATE

| | |
|---|---|
| Object | ES3DV2 - SN:3022 |
| Calibration procedure(s) | QA CAL-01.v6, QA CAL-23.v3 and QA CAL-25.v2<br>Calibration procedure for dosimetric E-field probes |
| Calibration date: | September 21, 2010 |

KOK 9/29/10

This calibration certificate documents the traceability to national standards, which realize the physical units of measurements (SI).
The measurements and the uncertainties with confidence probability are given on the following pages and are part of the certificate.

All calibrations have been conducted in the closed laboratory facility: environment temperature (22 ± 3)°C and humidity < 70%.

Calibration Equipment used (M&TE critical for calibration)

| Primary Standards | ID # | Cal Date (Certificate No.) | Scheduled Calibration |
|---|---|---|---|
| Power meter E4419B | GB41293874 | 1-Apr-10 (No. 217-01136) | Apr-11 |
| Power sensor E4412A | MY41495277 | 1-Apr-10 (No. 217-01136) | Apr-11 |
| Power sensor E4412A | MY41498087 | 1-Apr-10 (No. 217-01136) | Apr-11 |
| Reference 3 dB Attenuator | SN: S5054 (3c) | 30-Mar-10 (No. 217-01159) | Mar-11 |
| Reference 20 dB Attenuator | SN: S5086 (20b) | 30-Mar-10 (No. 217-01161) | Mar-11 |
| Reference 30 dB Attenuator | SN: S5129 (30b) | 30-Mar-10 (No. 217-01160) | Mar-11 |
| Reference Probe ES3DV2 | SN: 3013 | 30-Dec-09 (No. ES3-3013_Dec09) | Dec-10 |
| DAE4 | SN: 660 | 20-Apr-10 (No. DAE4-660_Apr10) | Apr-11 |

| Secondary Standards | ID # | Check Date (in house) | Scheduled Check |
|---|---|---|---|
| RF generator HP 8648C | US3642U01700 | 4-Aug-99 (in house check Oct-09) | In house check: Oct-11 |
| Network Analyzer HP 8753E | US37390585 | 18-Oct-01 (in house check Oct-09) | In house check: Oct10 |

| | Name | Function | Signature |
|---|---|---|---|
| Calibrated by: | Jeton Kastrati | Laboratory Technician | |
| Approved by: | Katja Pokovic | Technical Manager | |

Issued: September 22, 2010

This calibration certificate shall not be reproduced except in full without written approval of the laboratory.

## Glossary:

| | |
|---|---|
| TSL | tissue simulating liquid |
| NORMx,y,z | sensitivity in free space |
| ConvF | sensitivity in TSL / NORMx,y,z |
| DCP | diode compression point |
| CF | crest factor (1/duty_cycle) of the RF signal |
| A, B, C | modulation dependent linearization parameters |
| Polarization φ | φ rotation around probe axis |
| Polarization ϑ | ϑ rotation around an axis that is in the plane normal to probe axis (at measurement center), i.e., ϑ = 0 is normal to probe axis |

## Calibration is Performed According to the Following Standards:

a) IEEE Std 1528-2003, "IEEE Recommended Practice for Determining the Peak Spatial-Averaged Specific Absorption Rate (SAR) in the Human Head from Wireless Communications Devices: Measurement Techniques", December 2003
b) IEC 62209-1, "Procedure to measure the Specific Absorption Rate (SAR) for hand-held devices used in close proximity to the ear (frequency range of 300 MHz to 3 GHz)", February 2005

## Methods Applied and Interpretation of Parameters:

- *NORMx,y,z:* Assessed for E-field polarization ϑ = 0 (f ≤ 900 MHz in TEM-cell; f > 1800 MHz: R22 waveguide). NORMx,y,z are only intermediate values, i.e., the uncertainties of NORMx,y,z does not effect the $E^2$-field uncertainty inside TSL (see below *ConvF*).
- *NORM(f)x,y,z = NORMx,y,z * frequency_response* (see Frequency Response Chart). This linearization is implemented in DASY4 software versions later than 4.2. The uncertainty of the frequency response is included in the stated uncertainty of *ConvF*.
- *DCPx,y,z:* DCP are numerical linearization parameters assessed based on the data of power sweep with CW signal (no uncertainty required). DCP does not depend on frequency nor media.
- *Ax,y,z; Bx,y,z; Cx,y,z, VRx,y,z: A, B, C* are numerical linearization parameters assessed based on the data of power sweep for specific modulation signal. The parameters do not depend on frequency nor media. *VR* is the maximum calibration range expressed in RMS voltage across the diode.
- *ConvF and Boundary Effect Parameters:* Assessed in flat phantom using E-field (or Temperature Transfer Standard for f ≤ 800 MHz) and inside waveguide using analytical field distributions based on power measurements for f > 800 MHz. The same setups are used for assessment of the parameters applied for boundary compensation (alpha, depth) of which typical uncertainty values are given. These parameters are used in DASY4 software to improve probe accuracy close to the boundary. The sensitivity in TSL corresponds to *NORMx,y,z * ConvF* whereby the uncertainty corresponds to that given for *ConvF*. A frequency dependent *ConvF* is used in DASY version 4.4 and higher which allows extending the validity from ± 50 MHz to ± 100 MHz.
- *Spherical isotropy (3D deviation from isotropy)*: in a field of low gradients realized using a flat phantom exposed by a patch antenna.
- *Sensor Offset*: The sensor offset corresponds to the offset of virtual measurement center from the probe tip (on probe axis). No tolerance required.

# Probe ES3DV2

## SN:3022

| | |
|---|---|
| Manufactured: | April 15, 2003 |
| Last calibrated: | September 18, 2009 |
| Recalibrated: | September 21, 2010 |

Calibrated for DASY/EASY Systems

(Note: non-compatible with DASY2 system!)

# DASY/EASY - Parameters of Probe: ES3DV2 SN:3022

## Basic Calibration Parameters

| | Sensor X | Sensor Y | Sensor Z | Unc (k=2) |
|---|---|---|---|---|
| Norm ($\mu V/(V/m)^2$)[A] | 1.01 | 1.05 | 1.01 | ± 10.1% |
| DCP (mV)[B] | 92.8 | 92.5 | 89.7 | |

## Modulation Calibration Parameters

| UID | Communication System Name | PAR | | A dB | B dBuV | C | VR mV | Unc[E] (k=2) |
|---|---|---|---|---|---|---|---|---|
| 10000 | CW | 0.00 | X | 0.00 | 0.00 | 1.00 | 300.0 | ± 1.5% |
| | | | Y | 0.00 | 0.00 | 1.00 | 300.0 | |
| | | | Z | 0.00 | 0.00 | 1.00 | 300.0 | |

The reported uncertainty of measurement is stated as the standard uncertainty of measurement multiplied by the coverage factor k=2, which for a normal distribution corresponds to a coverage probability of approximately 95%.

[A] The uncertainties of NormX,Y,Z do not affect the $E^2$-field uncertainty inside TSL (see Pages 5 and 6).

[B] Numerical linearization parameter: uncertainty not required.

[E] Uncertainty is determined using the maximum deviation from linear response applying recatangular distribution and is expressed for the square of the field value.

# DASY/EASY - Parameters of Probe: ES3DV2 SN:3022

## Calibration Parameter Determined in Head Tissue Simulating Media

| f [MHz] | Validity [MHz][C] | Permittivity | Conductivity | ConvF X | ConvF Y | ConvF Z | Alpha | Depth | Unc (k=2) |
|---|---|---|---|---|---|---|---|---|---|
| 750 | ± 50 / ± 100 | 41.9 ± 5% | 0.89 ± 5% | 6.32 | 6.32 | 6.32 | 0.87 | 1.01 | ± 11.0% |
| 835 | ± 50 / ± 100 | 41.5 ± 5% | 0.90 ± 5% | 6.02 | 6.02 | 6.02 | 0.62 | 1.20 | ± 11.0% |
| 1750 | ± 50 / ± 100 | 40.1 ± 5% | 1.37 ± 5% | 5.01 | 5.01 | 5.01 | 0.27 | 2.23 | ± 11.0% |
| 1900 | ± 50 / ± 100 | 40.0 ± 5% | 1.40 ± 5% | 4.83 | 4.83 | 4.83 | 0.25 | 2.29 | ± 11.0% |
| 2450 | ± 50 / ± 100 | 39.2 ± 5% | 1.80 ± 5% | 4.21 | 4.21 | 4.21 | 0.25 | 2.62 | ± 11.0% |
| 2600 | ± 50 / ± 100 | 39.0 ± 5% | 1.96 ± 5% | 4.14 | 4.14 | 4.14 | 0.25 | 2.64 | ± 11.0% |

[C] The validity of ± 100 MHz only applies for DASY v4.4 and higher (see Page 2). The uncertainty is the RSS of the ConvF uncertainty at calibration frequency and the uncertainty for the indicated frequency band.

# DASY/EASY - Parameters of Probe: ES3DV2 SN:3022

## Calibration Parameter Determined in Body Tissue Simulating Media

| f [MHz] | Validity [MHz][C] | Permittivity | Conductivity | ConvF X | ConvF Y | ConvF Z | Alpha | Depth | Unc (k=2) |
|---|---|---|---|---|---|---|---|---|---|
| 750 | ± 50 / ± 100 | 55.5 ± 5% | 0.96 ± 5% | 6.09 | 6.09 | 6.09 | 0.68 | 1.20 | ± 11.0% |
| 835 | ± 50 / ± 100 | 55.2 ± 5% | 0.97 ± 5% | 5.89 | 5.89 | 5.89 | 0.65 | 1.20 | ± 11.0% |
| 1750 | ± 50 / ± 100 | 53.4 ± 5% | 1.49 ± 5% | 4.59 | 4.59 | 4.59 | 0.23 | 2.83 | ± 11.0% |
| 1900 | ± 50 / ± 100 | 53.3 ± 5% | 1.52 ± 5% | 4.34 | 4.34 | 4.34 | 0.22 | 3.71 | ± 11.0% |
| 2450 | ± 50 / ± 100 | 52.7 ± 5% | 1.95 ± 5% | 4.06 | 4.06 | 4.06 | 0.41 | 1.42 | ± 11.0% |
| 2600 | ± 50 / ± 100 | 52.5 ± 5% | 2.16 ± 5% | 4.06 | 4.06 | 4.06 | 0.53 | 1.23 | ± 11.0% |

[C] The validity of ± 100 MHz only applies for DASY v4.4 and higher (see Page 2). The uncertainty is the RSS of the ConvF uncertainty at calibration frequency and the uncertainty for the indicated frequency band.

# Frequency Response of E-Field

**(TEM-Cell:ifi110 EXX, Waveguide: R22)**

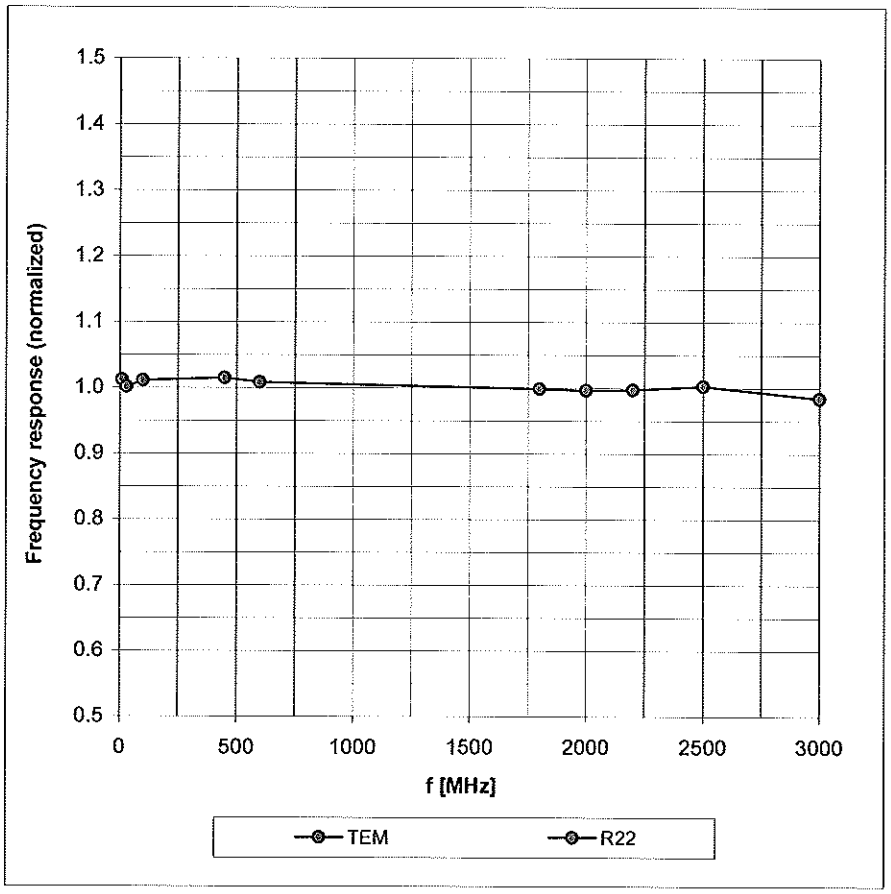


**Uncertainty of Frequency Response of E-field: ± 6.3% (k=2)**

# Receiving Pattern (ϕ), ϑ = 0°

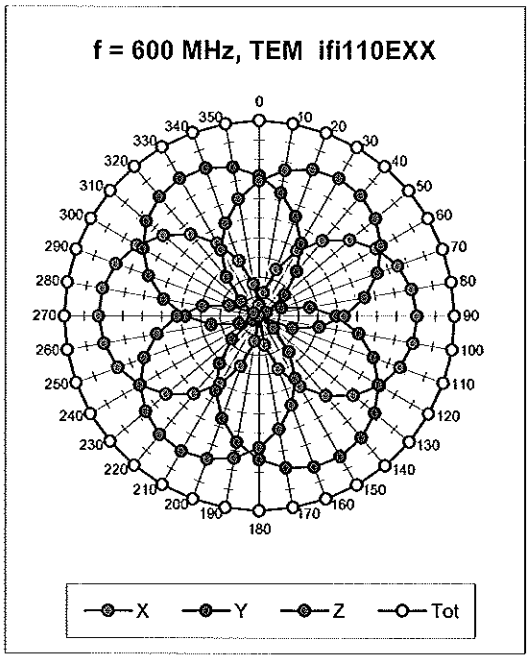


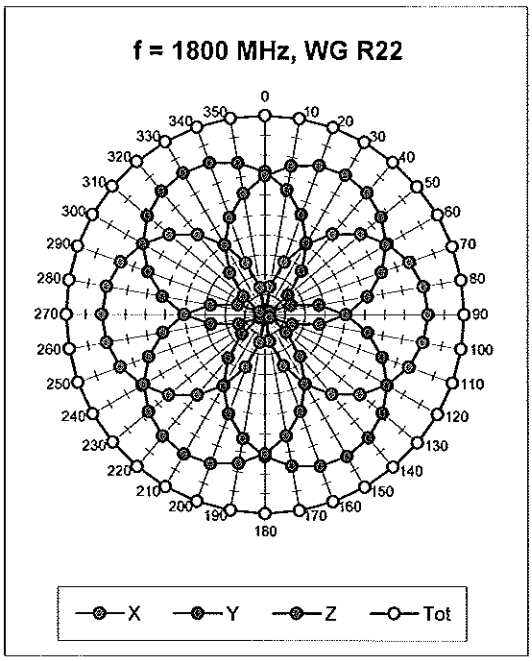


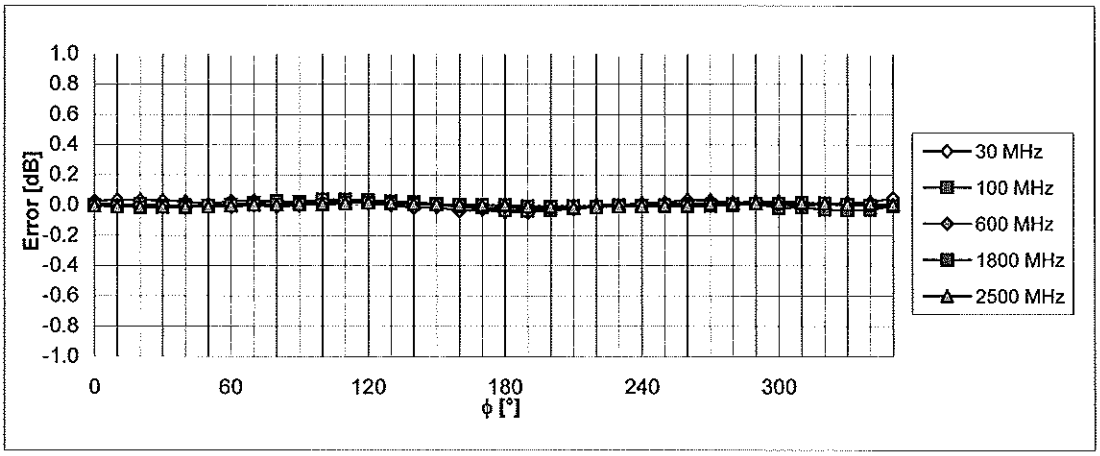


**Uncertainty of Axial Isotropy Assessment: ± 0.5% (k=2)**

# Dynamic Range f($SAR_{head}$)

(Waveguide R22, f = 1800 MHz)

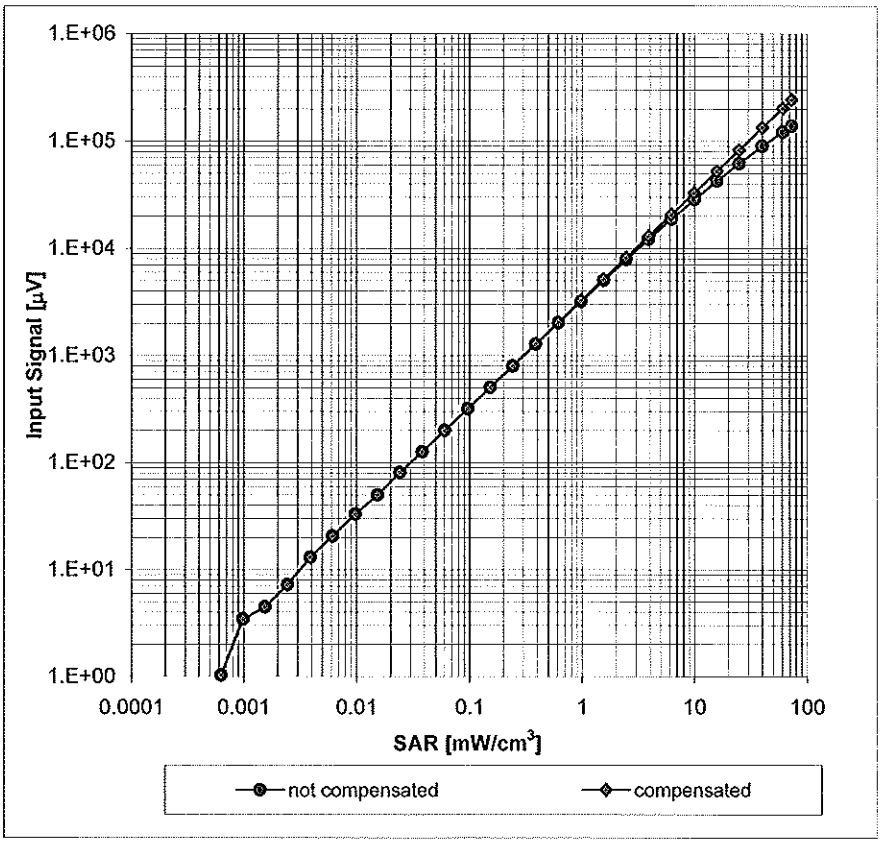


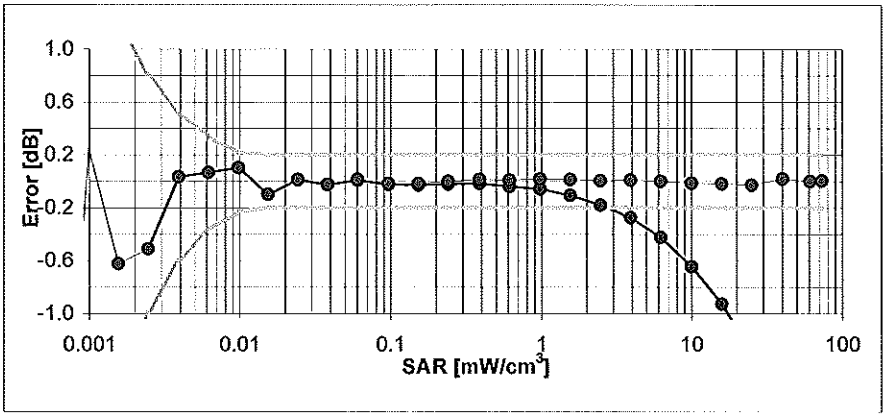


**Uncertainty of Linearity Assessment: ± 0.6% (k=2)**

# Conversion Factor Assessment

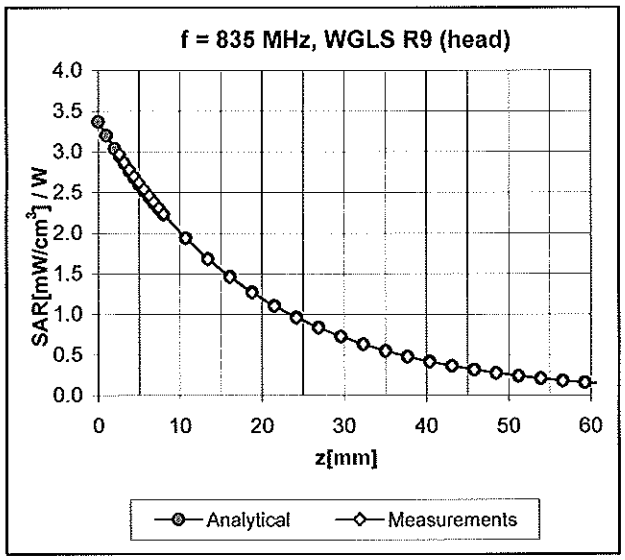


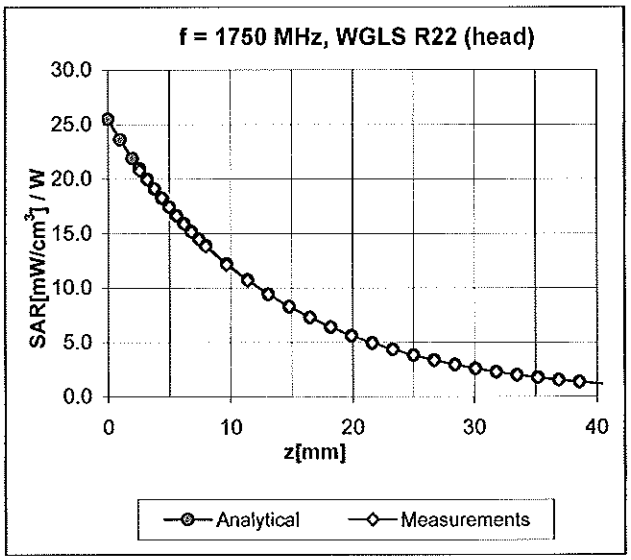


# Deviation from Isotropy in HSL

**Error (ϕ, ϑ), f = 900 MHz**

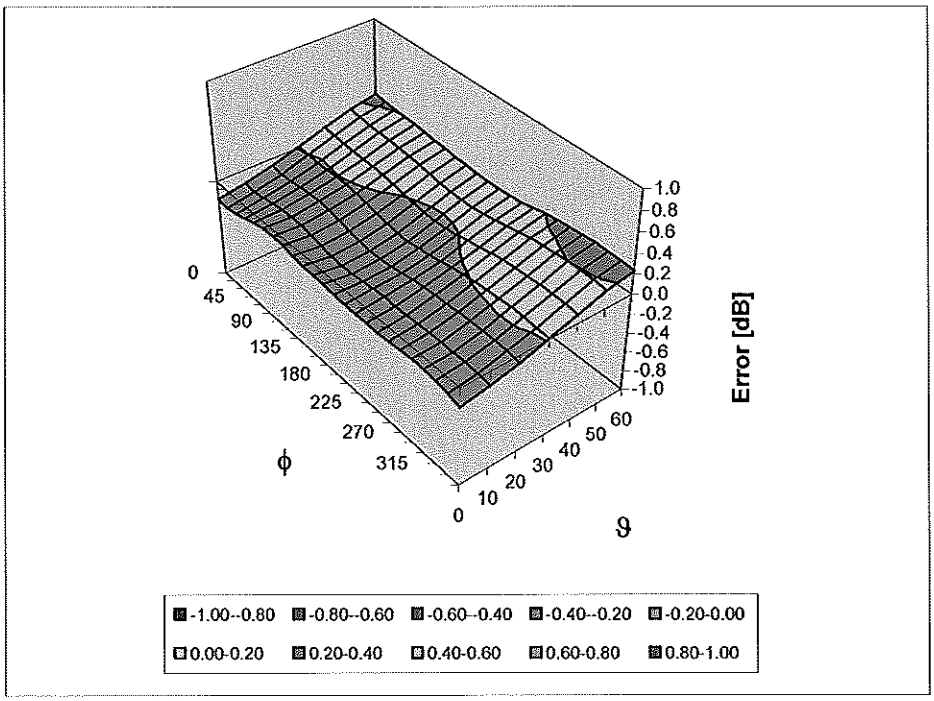


**Uncertainty of Spherical Isotropy Assessment: ± 2.6% (k=2)**

# Other Probe Parameters

| | |
|---|---|
| Sensor Arrangement | Triangular |
| Connector Angle (°) | Not applicable |
| Mechanical Surface Detection Mode | enabled |
| Optical Surface Detection Mode | disabled |
| Probe Overall Length | 337 mm |
| Probe Body Diameter | 10 mm |
| Tip Length | 10 mm |
| Tip Diameter | 4.0 mm |
| Probe Tip to Sensor X Calibration Point | 2 mm |
| Probe Tip to Sensor Y Calibration Point | 2 mm |
| Probe Tip to Sensor Z Calibration Point | 2 mm |
| Recommended Measurement Distance from Surface | 3 mm |

**Calibration Laboratory of**
Schmid & Partner
Engineering AG
**Zeughausstrasse 43, 8004 Zurich, Switzerland**

**S** Schweizerischer Kalibrierdienst
**C** Service suisse d'étalonnage
Servizio svizzero di taratura
**S** Swiss Calibration Service

Accredited by the Swiss Accreditation Service (SAS)
**The Swiss Accreditation Service is one of the signatories to the EA Multilateral Agreement for the recognition of calibration certificates**

**Accreditation No.: SCS 108**

**Client** PC Test

**Certificate No: EX-3550_Feb11**

# CALIBRATION CERTIFICATE

| | |
|---|---|
| Object | EX3DV4 - SN:3550 |
| Calibration procedure(s) | QA CAL-01.v7, QA CAL-14.v3, QA CAL-23.v4, QA CAL-25.v3<br>Calibration procedure for dosimetric E-field probes |
| Calibration date: | February 14, 2011 |

This calibration certificate documents the traceability to national standards, which realize the physical units of measurements (SI).
The measurements and the uncertainties with confidence probability are given on the following pages and are part of the certificate.

All calibrations have been conducted in the closed laboratory facility: environment temperature (22 ± 3)°C and humidity < 70%.

Calibration Equipment used (M&TE critical for calibration)

KOK 2/22/11

| Primary Standards | ID | Cal Date (Certificate No.) | Scheduled Calibration |
|---|---|---|---|
| Power meter E4419B | GB41293874 | 01-Apr-10 (No. 217-01136) | Apr-11 |
| Power sensor E4412A | MY41495277 | 01-Apr-10 (No. 217-01136) | Apr-11 |
| Power sensor E4412A | MY41498087 | 01-Apr-10 (No. 217-01136) | Apr-11 |
| Reference 3 dB Attenuator | SN: S5054 (3c) | 30-Mar-10 (No. 217-01159) | Mar-11 |
| Reference 20 dB Attenuator | SN: S5086 (20b) | 30-Mar-10 (No. 217-01161) | Mar-11 |
| Reference 30 dB Attenuator | SN: S5129 (30b) | 30-Mar-10 (No. 217-01160) | Mar-11 |
| Reference Probe ES3DV2 | SN: 3013 | 29-Dec-10 (No. ES3-3013_Dec10) | Dec-11 |
| DAE4 | SN: 654 | 23-Apr-10 (No. DAE4-654_Apr10) | Apr-11 |
| | | | |
| Secondary Standards | ID | Check Date (in house) | Scheduled Check |
| RF generator HP 8648C | US3642U01700 | 4-Aug-99 (in house check Oct-09) | In house check: Oct-11 |
| Network Analyzer HP 8753E | US37390585 | 18-Oct-01 (in house check Oct-10) | In house check: Oct-11 |

| | Name | Function | Signature |
|---|---|---|---|
| Calibrated by: | Katja Pokovic | Technical Manager | |
| Approved by: | Niels Kuster | Quality Manager | |

Issued: February 14, 2011

This calibration certificate shall not be reproduced except in full without written approval of the laboratory.

## Glossary:

| | |
|---|---|
| TSL | tissue simulating liquid |
| NORMx,y,z | sensitivity in free space |
| ConvF | sensitivity in TSL / NORMx,y,z |
| DCP | diode compression point |
| CF | crest factor (1/duty_cycle) of the RF signal |
| A, B, C | modulation dependent linearization parameters |
| Polarization $\omega$ | $\omega$ rotation around probe axis |
| Polarization $\vartheta$ | $\vartheta$ rotation around an axis that is in the plane normal to probe axis (at measurement center), i.e., $\vartheta = 0$ is normal to probe axis |

## Calibration is Performed According to the Following Standards:

a) IEEE Std 1528-2003, "IEEE Recommended Practice for Determining the Peak Spatial-Averaged Specific Absorption Rate (SAR) in the Human Head from Wireless Communications Devices: Measurement Techniques", December 2003
b) IEC 62209-1, "Procedure to measure the Specific Absorption Rate (SAR) for hand-held devices used in close proximity to the ear (frequency range of 300 MHz to 3 GHz)", February 2005

## Methods Applied and Interpretation of Parameters:

- *NORMx,y,z:* Assessed for E-field polarization $\vartheta = 0$ (f ≤ 900 MHz in TEM-cell; f > 1800 MHz: R22 waveguide). NORMx,y,z are only intermediate values, i.e., the uncertainties of NORMx,y,z does not affect the $E^2$-field uncertainty inside TSL (see below *ConvF*).
- *NORM(f)x,y,z = NORMx,y,z * frequency_response* (see Frequency Response Chart). This linearization is implemented in DASY4 software versions later than 4.2. The uncertainty of the frequency response is included in the stated uncertainty of *ConvF*.
- *DCPx,y,z:* DCP are numerical linearization parameters assessed based on the data of power sweep with CW signal (no uncertainty required). DCP does not depend on frequency nor media.
- *PAR:* PAR is the Peak to Average Ratio that is not calibrated but determined based on the signal characteristics
- *Ax,y,z; Bx,y,z; Cx,y,z* are numerical linearization parameters in dB assessed based on the data of power sweep for specific modulation signal. The parameters do not depend on frequency nor media.
- *VR:* VR is the validity range of the calibration related to the average diode voltage or DAE voltage in mV.
- *ConvF and Boundary Effect Parameters:* Assessed in flat phantom using E-field (or Temperature Transfer Standard for f ≤ 800 MHz) and inside waveguide using analytical field distributions based on power measurements for f > 800 MHz. The same setups are used for assessment of the parameters applied for boundary compensation (alpha, depth) of which typical uncertainty values are given. These parameters are used in DASY4 software to improve probe accuracy close to the boundary. The sensitivity in TSL corresponds to *NORMx,y,z * ConvF* whereby the uncertainty corresponds to that given for *ConvF*. A frequency dependent *ConvF* is used in DASY version 4.4 and higher which allows extending the validity from ± 50 MHz to ± 100 MHz.
- *Spherical isotropy (3D deviation from isotropy)*: in a field of low gradients realized using a flat phantom exposed by a patch antenna.
- *Sensor Offset*: The sensor offset corresponds to the offset of virtual measurement center from the probe tip (on probe axis). No tolerance required.

# Probe EX3DV4

## SN:3550

Manufactured: May 19, 2004
Calibrated: February 14, 2011

Calibrated for DASY/EASY Systems
(Note: non-compatible with DASY2 system!)

# DASY/EASY - Parameters of Probe: EX3DV4 - SN:3550

## Basic Calibration Parameters

| | Sensor X | Sensor Y | Sensor Z | Unc (k=2) |
|---|---|---|---|---|
| Norm ($\mu V/(V/m)^2$)[A] | 0.52 | 0.45 | 0.50 | ± 10.1 % |
| DCP (mV)[B] | 100.3 | 98.8 | 99.0 | |

## Modulation Calibration Parameters

| UID | Communication System Name | PAR | | A dB | B dB | C dB | VR mV | Unc[E] (k=2) |
|---|---|---|---|---|---|---|---|---|
| 10000 | CW | 0.00 | X | 0.00 | 0.00 | 1.00 | 110.7 | ±2.2 % |
| | | | Y | 0.00 | 0.00 | 1.00 | 145.7 | |
| | | | Z | 0.00 | 0.00 | 1.00 | 148.8 | |

The reported uncertainty of measurement is stated as the standard uncertainty of measurement multiplied by the coverage factor k=2, which for a normal distribution corresponds to a coverage probability of approximately 95%.

[A] The uncertainties of NormX,Y,Z do not affect the $E^2$-field uncertainty inside TSL (see Pages 5 and 6).
[B] Numerical linearization parameter: uncertainty not required.
[E] Uncertainty is determined using the max. deviation from linear response applying rectangular distribution and is expressed for the square of the field value.

# DASY/EASY - Parameters of Probe: EX3DV4 - SN:3550

## Calibration Parameter Determined in Head Tissue Simulating Media

| f (MHz) [C] | Relative Permittivity [F] | Conductivity (S/m) [F] | ConvF X | ConvF Y | ConvF Z | Alpha | Depth (mm) | Unct. (k=2) |
|---|---|---|---|---|---|---|---|---|
| 750 | 41.9 | 0.89 | 8.42 | 8.42 | 8.42 | 0.48 | 0.69 | ± 12.0 % |
| 835 | 41.5 | 0.90 | 8.04 | 8.04 | 8.04 | 0.33 | 0.84 | ± 12.0 % |
| 1750 | 40.1 | 1.37 | 7.33 | 7.33 | 7.33 | 0.46 | 0.65 | ± 12.0 % |
| 1900 | 40.0 | 1.40 | 7.01 | 7.01 | 7.01 | 0.42 | 0.72 | ± 12.0 % |
| 2450 | 39.2 | 1.80 | 6.29 | 6.29 | 6.29 | 0.13 | 1.57 | ± 12.0 % |
| 2600 | 39.0 | 1.96 | 6.13 | 6.13 | 6.13 | 0.20 | 1.32 | ± 12.0 % |
| 4950 | 36.3 | 4.40 | 4.37 | 4.37 | 4.37 | 0.35 | 1.80 | ± 13.1 % |
| 5200 | 36.0 | 4.66 | 4.06 | 4.06 | 4.06 | 0.35 | 1.80 | ± 13.1 % |
| 5300 | 35.9 | 4.76 | 3.92 | 3.92 | 3.92 | 0.35 | 1.80 | ± 13.1 % |
| 5500 | 35.6 | 4.96 | 3.77 | 3.77 | 3.77 | 0.35 | 1.80 | ± 13.1 % |
| 5600 | 35.5 | 5.07 | 3.50 | 3.50 | 3.50 | 0.40 | 1.80 | ± 13.1 % |
| 5800 | 35.3 | 5.27 | 3.64 | 3.64 | 3.64 | 0.40 | 1.80 | ± 13.1 % |

[C] Frequency validity of ± 100 MHz only applies for DASY v4.4 and higher (see Page 2), else it is restricted to ± 50 MHz. The uncertainty is the RSS of the ConvF uncertainty at calibration frequency and the uncertainty for the indicated frequency band.
[F] At frequencies below 3 GHz, the validity of tissue parameters ($\varepsilon$ and $\sigma$) can be relaxed to ± 10% if liquid compensation formula is applied to measured SAR values. At frequencies above 3 GHz, the validity of tissue parameters ($\varepsilon$ and $\sigma$) is restricted to ± 5%. The uncertainty is the RSS of the ConvF uncertainty for indicated target tissue parameters.

# DASY/EASY - Parameters of Probe: EX3DV4- SN:3550

## Calibration Parameter Determined in Body Tissue Simulating Media

| f (MHz) [C] | Relative Permittivity [F] | Conductivity (S/m) [F] | ConvF X | ConvF Y | ConvF Z | Alpha | Depth (mm) | Unct. (k=2) |
|---|---|---|---|---|---|---|---|---|
| 750 | 55.5 | 0.96 | 8.18 | 8.18 | 8.18 | 0.23 | 1.09 | ± 12.0 % |
| 835 | 55.2 | 0.97 | 8.11 | 8.11 | 8.11 | 0.25 | 1.05 | ± 12.0 % |
| 1750 | 53.4 | 1.49 | 7.21 | 7.21 | 7.21 | 0.42 | 0.89 | ± 12.0 % |
| 1900 | 53.3 | 1.52 | 6.77 | 6.77 | 6.77 | 0.35 | 0.84 | ± 12.0 % |
| 2450 | 52.7 | 1.95 | 6.25 | 6.25 | 6.25 | 0.30 | 0.86 | ± 12.0 % |
| 2600 | 52.5 | 2.16 | 5.98 | 5.98 | 5.98 | 0.21 | 1.03 | ± 12.0 % |
| 3700 | 51.0 | 3.55 | 5.42 | 5.42 | 5.42 | 0.20 | 1.95 | ± 13.1 % |
| 4950 | 49.4 | 5.01 | 3.72 | 3.72 | 3.72 | 0.45 | 1.90 | ± 13.1 % |
| 5200 | 49.0 | 5.30 | 3.58 | 3.58 | 3.58 | 0.45 | 1.90 | ± 13.1 % |
| 5300 | 48.9 | 5.42 | 3.31 | 3.31 | 3.31 | 0.48 | 1.90 | ± 13.1 % |
| 5500 | 48.6 | 5.65 | 3.21 | 3.21 | 3.21 | 0.47 | 1.90 | ± 13.1 % |
| 5600 | 48.5 | 5.77 | 3.19 | 3.19 | 3.19 | 0.45 | 1.90 | ± 13.1 % |
| 5800 | 48.2 | 6.00 | 3.29 | 3.29 | 3.29 | 0.50 | 1.90 | ± 13.1 % |

[C] Frequency validity of ± 100 MHz only applies for DASY v4.4 and higher (see Page 2), else it is restricted to ± 50 MHz. The uncertainty is the RSS of the ConvF uncertainty at calibration frequency and the uncertainty for the indicated frequency band.
[F] At frequencies below 3 GHz, the validity of tissue parameters ($\varepsilon$ and $\sigma$) can be relaxed to ± 10% if liquid compensation formula is applied to measured SAR values. At frequencies above 3 GHz, the validity of tissue parameters ($\varepsilon$ and $\sigma$) is restricted to ± 5%. The uncertainty is the RSS of the ConvF uncertainty for indicated target tissue parameters.

# Frequency Response of E-Field

**(TEM-Cell:ifi110 EXX, Waveguide: R22)**

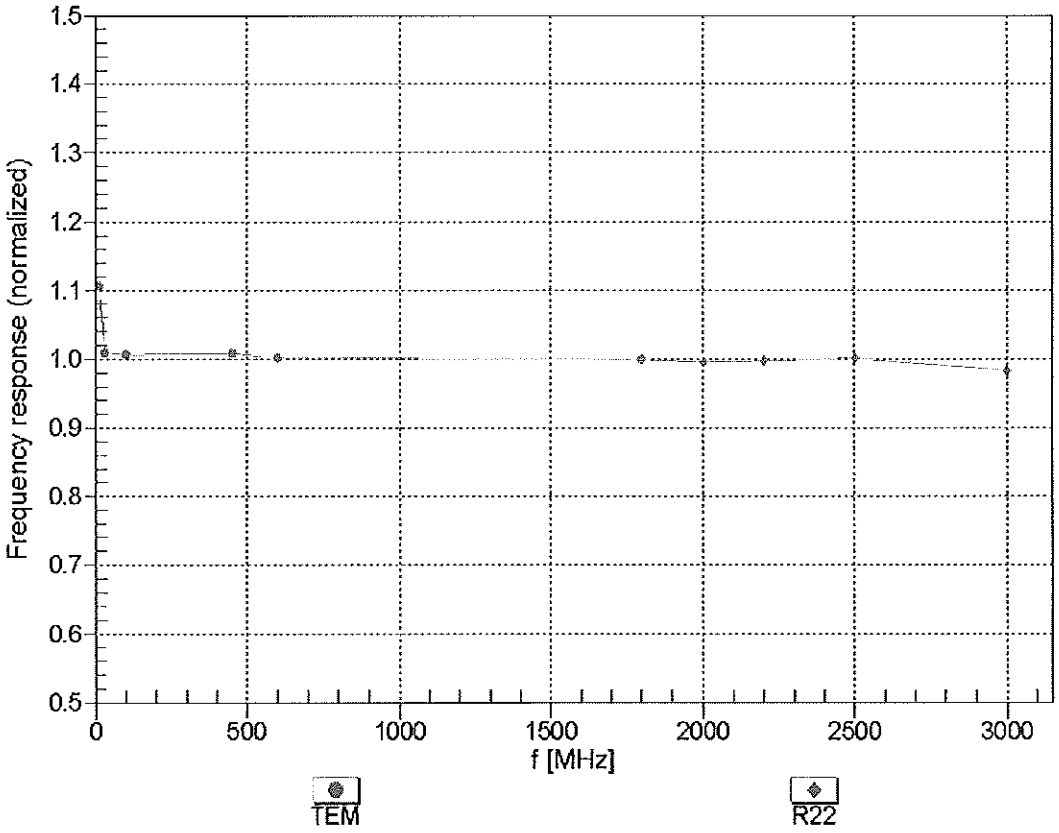


**Uncertainty of Frequency Response of E-field: ± 6.3% (k=2)**

# Receiving Pattern (ϕ), ϑ = 0°

f=600 MHz,TEM

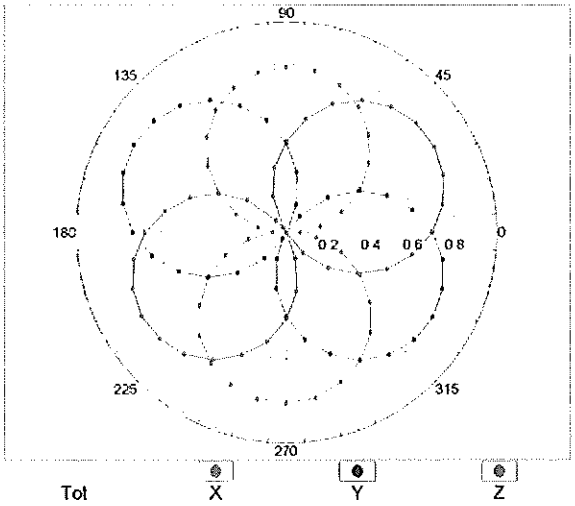


f=1800 MHz,R22

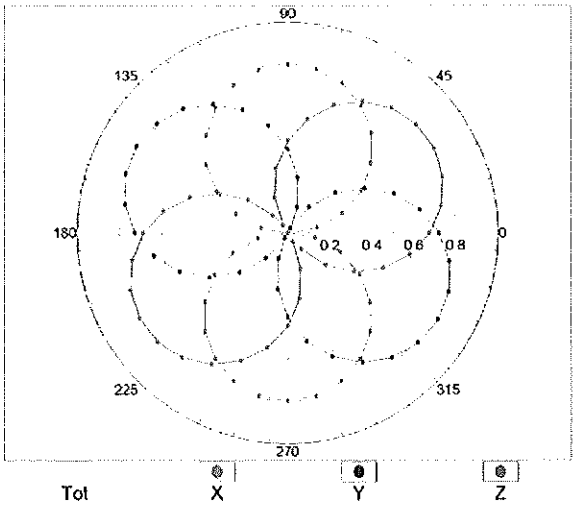


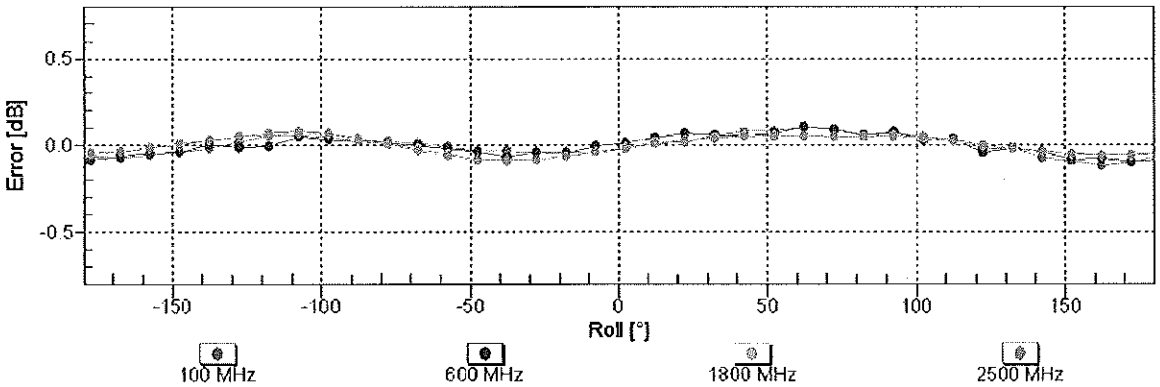


**Uncertainty of Axial Isotropy Assessment: ± 0.5% (k=2)**

# Dynamic Range f($SAR_{head}$)
**(TEM cell , f = 900 MHz)**

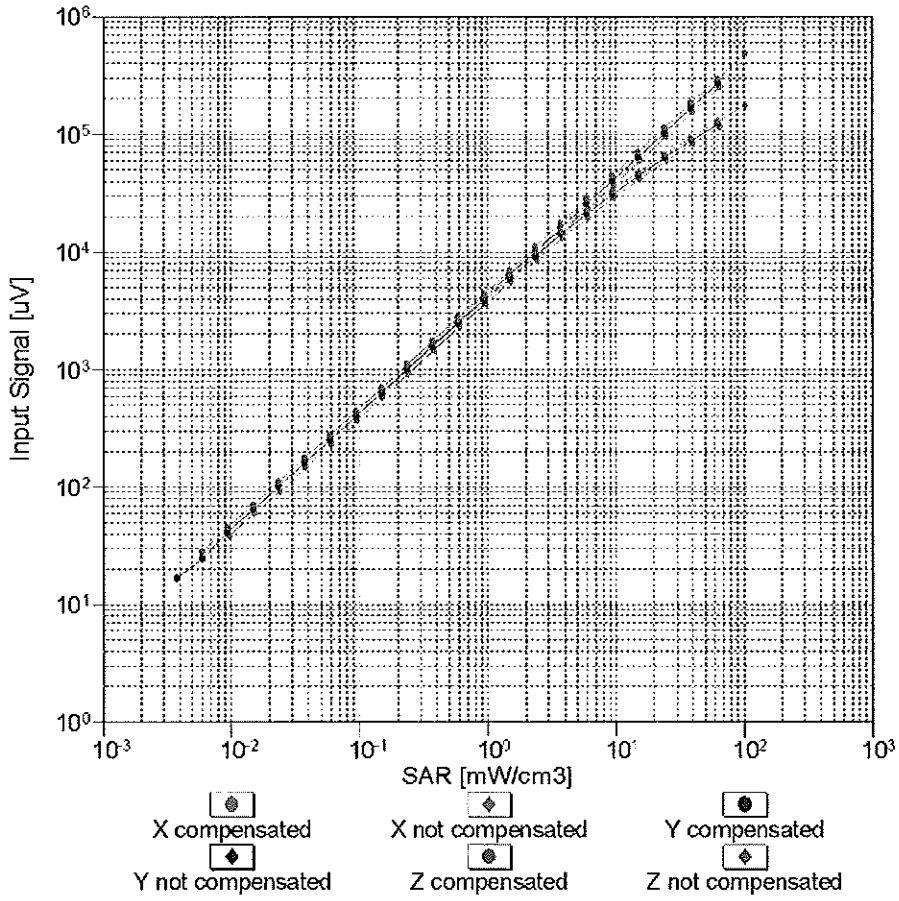


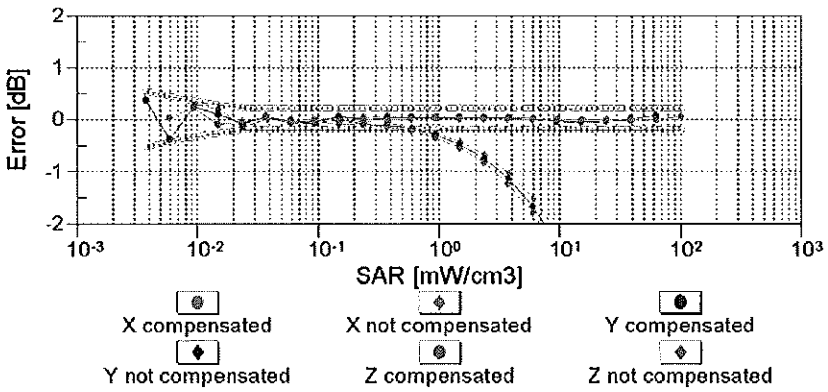


**Uncertainty of Linearity Assessment: ± 0.6% (k=2)**

# Conversion Factor Assessment

f = 750 MHz,WGLS R9 (H_convF)

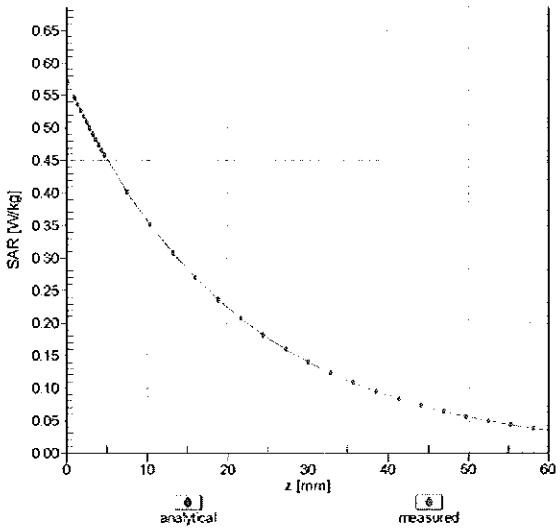


f = 5800 MHz,WGLS R58 (H_convF)-SCS

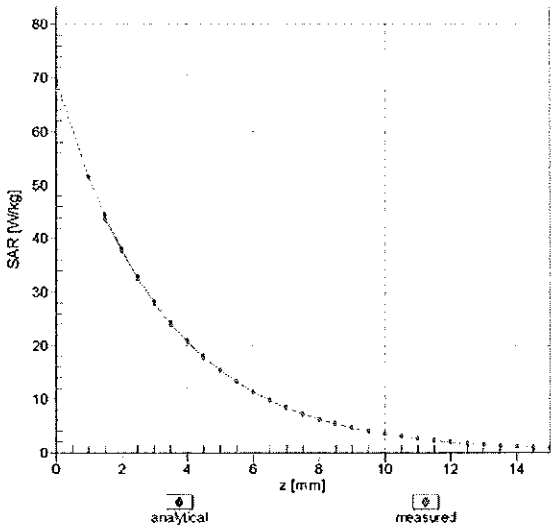


# Deviation from Isotropy in Air

**Error (ϕ, ϑ), f = 900 MHz**

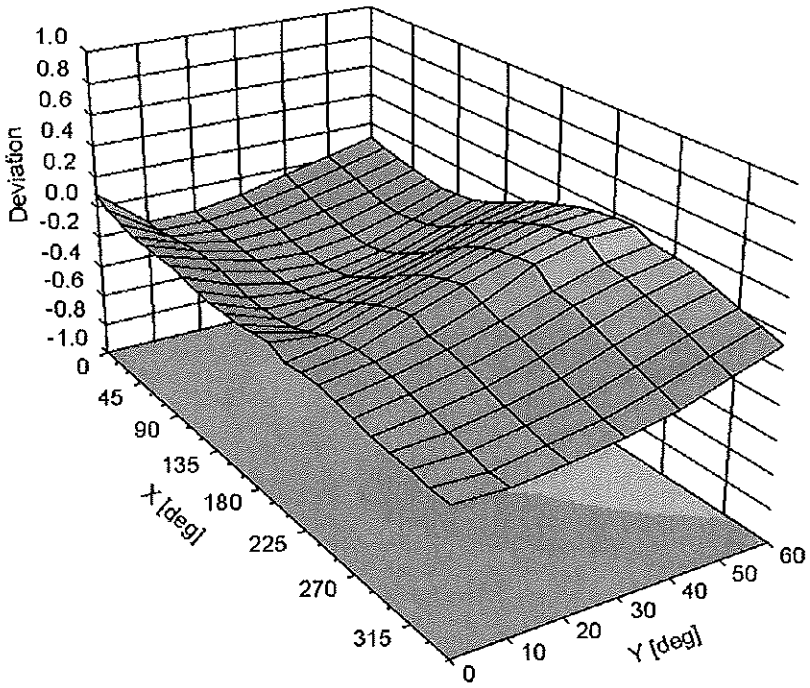


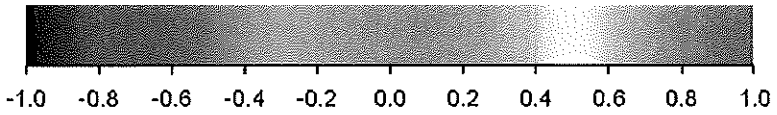


**Uncertainty of Spherical Isotropy Assessment: ± 2.6% (k=2)**

# DASY/EASY - Parameters of Probe: EX3DV4 - SN:3550

## Other Probe Parameters

| | |
|---|---|
| Sensor Arrangement | Triangular |
| Connector Angle (°) | Not applicable |
| Mechanical Surface Detection Mode | enabled |
| Optical Surface Detection Mode | disabled |
| Probe Overall Length | 337 mm |
| Probe Body Diameter | 10 mm |
| Tip Length | 9 mm |
| Tip Diameter | 3 mm |
| Probe Tip to Sensor X Calibration Point | 1 mm |
| Probe Tip to Sensor Y Calibration Point | 1 mm |
| Probe Tip to Sensor Z Calibration Point | 1 mm |
| Recommended Measurement Distance from Surface | 2 mm |

**Calibration Laboratory of**
Schmid & Partner
Engineering AG
**Zeughausstrasse 43, 8004 Zurich, Switzerland**

**S** Schweizerischer Kalibrierdienst
**C** Service suisse d'étalonnage
Servizio svizzero di taratura
**S** Swiss Calibration Service

Accredited by the Swiss Accreditation Service (SAS)
**The Swiss Accreditation Service is one of the signatories to the EA Multilateral Agreement for the recognition of calibration certificates**

**Accreditation No.: SCS 108**

**Client** **PC Test**

**Certificate No: EX3-3561_Aug10**

# CALIBRATION CERTIFICATE

| | |
|---|---|
| Object | EX3DV4 - SN:3561 |
| Calibration procedure(s) | QA CAL-01.v6, QA CAL-14.v3, QA CAL-23.v3 and QA CAL-25.v2<br>Calibration procedure for dosimetric E-field probes |
| Calibration date: | August 19, 2010 |

KOK 8/30/10

This calibration certificate documents the traceability to national standards, which realize the physical units of measurements (SI).
The measurements and the uncertainties with confidence probability are given on the following pages and are part of the certificate.

All calibrations have been conducted in the closed laboratory facility: environment temperature (22 ± 3)°C and humidity < 70%.

Calibration Equipment used (M&TE critical for calibration)

| Primary Standards | ID # | Cal Date (Certificate No.) | Scheduled Calibration |
|---|---|---|---|
| Power meter E4419B | GB41293874 | 1-Apr-10 (No. 217-01136) | Apr-11 |
| Power sensor E4412A | MY41495277 | 1-Apr-10 (No. 217-01136) | Apr-11 |
| Power sensor E4412A | MY41498087 | 1-Apr-10 (No. 217-01136) | Apr-11 |
| Reference 3 dB Attenuator | SN: S5054 (3c) | 30-Mar-10 (No. 217-01159) | Mar-11 |
| Reference 20 dB Attenuator | SN: S5086 (20b) | 30-Mar-10 (No. 217-01161) | Mar-11 |
| Reference 30 dB Attenuator | SN: S5129 (30b) | 30-Mar-10 (No. 217-01160) | Mar-11 |
| Reference Probe ES3DV2 | SN: 3013 | 30-Dec-09 (No. ES3-3013_Dec09) | Dec-10 |
| DAE4 | SN: 660 | 20-Apr-10 (No. DAE4-660_Apr10) | Apr-11 |

| Secondary Standards | ID # | Check Date (in house) | Scheduled Check |
|---|---|---|---|
| RF generator HP 8648C | US3642U01700 | 4-Aug-99 (in house check Oct-09) | In house check: Oct-11 |
| Network Analyzer HP 8753E | US37390585 | 18-Oct-01 (in house check Oct-09) | In house check: Oct10 |

| | Name | Function | Signature |
|---|---|---|---|
| Calibrated by: | Katja Pokovic | Technical Manager | |
| Approved by: | Niels Kuster | Quality Manager | |

Issued: August 20, 2010

This calibration certificate shall not be reproduced except in full without written approval of the laboratory.

## Glossary:

| | |
|---|---|
| TSL | tissue simulating liquid |
| NORMx,y,z | sensitivity in free space |
| ConvF | sensitivity in TSL / NORMx,y,z |
| DCP | diode compression point |
| CF | crest factor (1/duty_cycle) of the RF signal |
| A, B, C | modulation dependent linearization parameters |
| Polarization φ | φ rotation around probe axis |
| Polarization ϑ | ϑ rotation around an axis that is in the plane normal to probe axis (at measurement center), i.e., ϑ = 0 is normal to probe axis |

## Calibration is Performed According to the Following Standards:

a) IEEE Std 1528-2003, "IEEE Recommended Practice for Determining the Peak Spatial-Averaged Specific Absorption Rate (SAR) in the Human Head from Wireless Communications Devices: Measurement Techniques", December 2003
b) IEC 62209-1, "Procedure to measure the Specific Absorption Rate (SAR) for hand-held devices used in close proximity to the ear (frequency range of 300 MHz to 3 GHz)", February 2005

## Methods Applied and Interpretation of Parameters:

- *NORMx,y,z:* Assessed for E-field polarization ϑ = 0 (f ≤ 900 MHz in TEM-cell; f > 1800 MHz: R22 waveguide). NORMx,y,z are only intermediate values, i.e., the uncertainties of NORMx,y,z does not effect the $E^2$-field uncertainty inside TSL (see below *ConvF*).
- *NORM(f)x,y,z = NORMx,y,z * frequency_response* (see Frequency Response Chart). This linearization is implemented in DASY4 software versions later than 4.2. The uncertainty of the frequency response is included in the stated uncertainty of *ConvF*.
- *DCPx,y,z:* DCP are numerical linearization parameters assessed based on the data of power sweep with CW signal (no uncertainty required). DCP does not depend on frequency nor media.
- *Ax,y,z; Bx,y,z; Cx,y,z, VRx,y,z: A, B, C* are numerical linearization parameters assessed based on the data of power sweep for specific modulation signal. The parameters do not depend on frequency nor media. *VR* is the maximum calibration range expressed in RMS voltage across the diode.
- *ConvF and Boundary Effect Parameters:* Assessed in flat phantom using E-field (or Temperature Transfer Standard for f ≤ 800 MHz) and inside waveguide using analytical field distributions based on power measurements for f > 800 MHz. The same setups are used for assessment of the parameters applied for boundary compensation (alpha, depth) of which typical uncertainty values are given. These parameters are used in DASY4 software to improve probe accuracy close to the boundary. The sensitivity in TSL corresponds to *NORMx,y,z * ConvF* whereby the uncertainty corresponds to that given for *ConvF*. A frequency dependent *ConvF* is used in DASY version 4.4 and higher which allows extending the validity from ± 50 MHz to ± 100 MHz.
- *Spherical isotropy (3D deviation from isotropy)*: in a field of low gradients realized using a flat phantom exposed by a patch antenna.
- *Sensor Offset*: The sensor offset corresponds to the offset of virtual measurement center from the probe tip (on probe axis). No tolerance required.

# Probe EX3DV4

## SN:3561

| | |
|---|---|
| Manufactured: | February 14, 2005 |
| Last calibrated: | August 26, 2008 |
| Recalibrated: | August 19, 2010 |

Calibrated for DASY/EASY Systems

(Note: non-compatible with DASY2 system!)

# DASY/EASY - Parameters of Probe: EX3DV4 SN:3561

## Basic Calibration Parameters

| | Sensor X | Sensor Y | Sensor Z | Unc (k=2) |
|---|---|---|---|---|
| Norm ($\mu V/(V/m)^2$)[A] | 0.45 | 0.48 | 0.43 | ± 10.1% |
| DCP (mV)[B] | 87.4 | 89.6 | 88.5 | |

## Modulation Calibration Parameters

| UID | Communication System Name | PAR | | A dB | B dBuV | C | VR mV | Unc[E] (k=2) |
|---|---|---|---|---|---|---|---|---|
| 10000 | CW | 0.00 | X | 0.00 | 0.00 | 1.00 | 300 | ± 1.5% |
| | | | Y | 0.00 | 0.00 | 1.00 | 300 | |
| | | | Z | 0.00 | 0.00 | 1.00 | 300 | |

The reported uncertainty of measurement is stated as the standard uncertainty of measurement multiplied by the coverage factor k=2, which for a normal distribution corresponds to a coverage probability of approximately 95%.

[A] The uncertainties of NormX,Y,Z do not affect the $\vec{E}$-field uncertainty inside TSL (see Pages 5 and 6).

[B] Numerical linearization parameter: uncertainty not required.

[E] Uncertainty is determined using the maximum deviation from linear response applying recatangular distribution and is expressed for the square of the field value

# DASY/EASY - Parameters of Probe: EX3DV4 SN:3561

## Calibration Parameter Determined in Head Tissue Simulating Media

| f [MHz] | Validity [MHz][c] | Permittivity | Conductivity | ConvF X | ConvF Y | ConvF Z | Alpha | Depth Unc (k=2) |
|---|---|---|---|---|---|---|---|---|
| 750 | ± 50 / ± 100 | 41.9 ± 5% | 0.89 ± 5% | 8.36 | 8.36 | 8.36 | 0.76 | 0.64 ± 11.0% |
| 835 | ± 50 / ± 100 | 41.5 ± 5% | 0.90 ± 5% | 7.96 | 7.96 | 7.96 | 0.75 | 0.64 ± 11.0% |
| 1750 | ± 50 / ± 100 | 40.1 ± 5% | 1.37 ± 5% | 6.92 | 6.92 | 6.92 | 0.90 | 0.57 ± 11.0% |
| 1900 | ± 50 / ± 100 | 40.0 ± 5% | 1.40 ± 5% | 6.69 | 6.69 | 6.69 | 0.76 | 0.63 ± 11.0% |
| 2450 | ± 50 / ± 100 | 39.2 ± 5% | 1.80 ± 5% | 6.11 | 6.11 | 6.11 | 0.42 | 0.83 ± 11.0% |
| 2600 | ± 50 / ± 100 | 39.0 ± 5% | 1.96 ± 5% | 6.09 | 6.09 | 6.09 | 0.36 | 0.93 ± 11.0% |

[c] The validity of ± 100 MHz only applies for DASY v4.4 and higher (see Page 2). The uncertainty is the RSS of the ConvF uncertainty at calibration frequency and the uncertainty for the indicated frequency band.

# DASY/EASY - Parameters of Probe: EX3DV4 SN:3561

## Calibration Parameter Determined in Body Tissue Simulating Media

| f [MHz] | Validity [MHz][C] | Permittivity | Conductivity | ConvF X | ConvF Y | ConvF Z | Alpha | Depth Unc (k=2) |
|---|---|---|---|---|---|---|---|---|
| 835 | ± 50 / ± 100 | 55.2 ± 5% | 0.97 ± 5% | 8.09 | 8.09 | 8.09 | 0.74 | 0.65 ± 11.0% |
| 1750 | ± 50 / ± 100 | 53.4 ± 5% | 1.49 ± 5% | 6.84 | 6.84 | 6.84 | 0.43 | 0.82 ± 11.0% |
| 1900 | ± 50 / ± 100 | 53.3 ± 5% | 1.52 ± 5% | 6.59 | 6.59 | 6.59 | 0.56 | 0.71 ± 11.0% |
| 2450 | ± 50 / ± 100 | 52.7 ± 5% | 1.95 ± 5% | 6.44 | 6.44 | 6.44 | 0.37 | 0.87 ± 11.0% |
| 2600 | ± 50 / ± 100 | 52.5 ± 5% | 2.16 ± 5% | 6.45 | 6.45 | 6.45 | 0.37 | 0.95 ± 11.0% |
| 4950 | ± 50 / ± 100 | 49.4 ± 5% | 5.01 ± 5% | 3.80 | 3.80 | 3.80 | 0.53 | 1.90 ± 13.1% |
| 5200 | ± 50 / ± 100 | 49.0 ± 5% | 5.30 ± 5% | 3.67 | 3.67 | 3.67 | 0.60 | 1.95 ± 13.1% |
| 5300 | ± 50 / ± 100 | 48.5 ± 5% | 5.42 ± 5% | 3.42 | 3.42 | 3.42 | 0.63 | 1.95 ± 13.1% |
| 5500 | ± 50 / ± 100 | 48.6 ± 5% | 5.65 ± 5% | 3.31 | 3.31 | 3.31 | 0.63 | 1.95 ± 13.1% |
| 5600 | ± 50 / ± 100 | 48.5 ± 5% | 5.77 ± 5% | 3.12 | 3.12 | 3.12 | 0.65 | 1.95 ± 13.1% |
| 5800 | ± 50 / ± 100 | 48.2 ± 5% | 6.00 ± 5% | 3.25 | 3.25 | 3.25 | 0.65 | 1.95 ± 13.1% |

[C] The validity of ± 100 MHz only applies for DASY v4.4 and higher (see Page 2). The uncertainty is the RSS of the ConvF uncertainty at calibration frequency and the uncertainty for the indicated frequency band.

# Frequency Response of E-Field

**(TEM-Cell:ifi110 EXX, Waveguide: R22)**

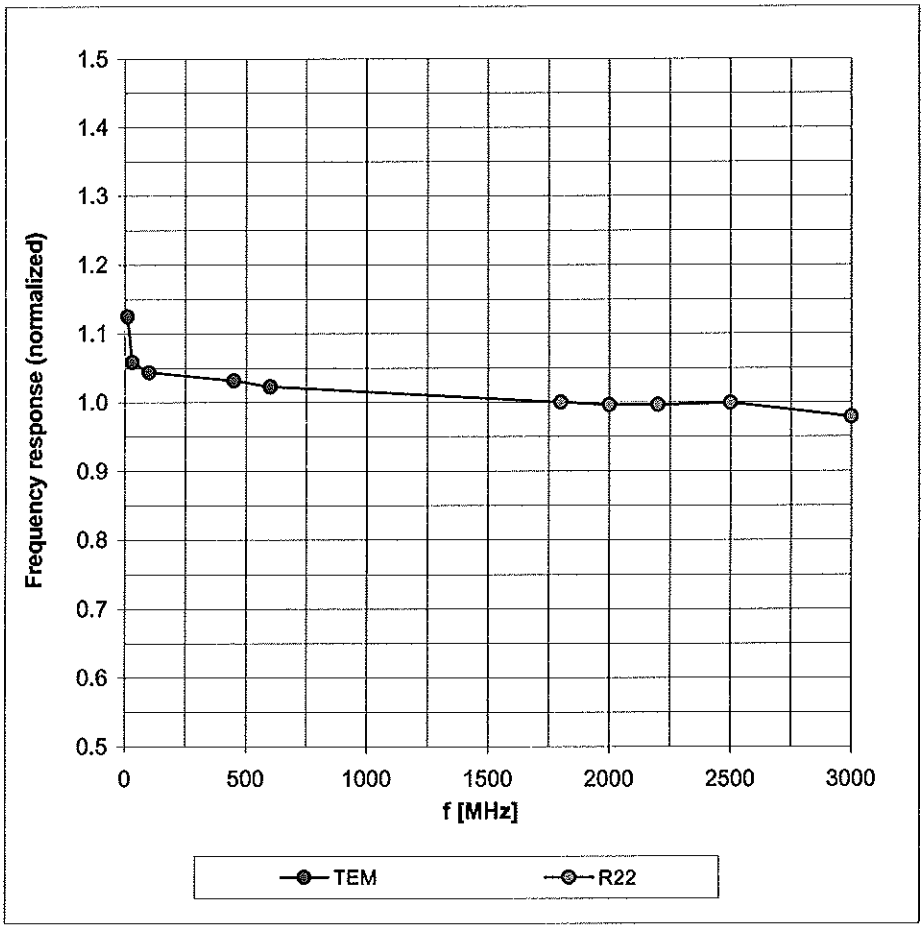


**Uncertainty of Frequency Response of E-field: ± 6.3% (k=2)**

# Receiving Pattern (ϕ), ϑ = 0°

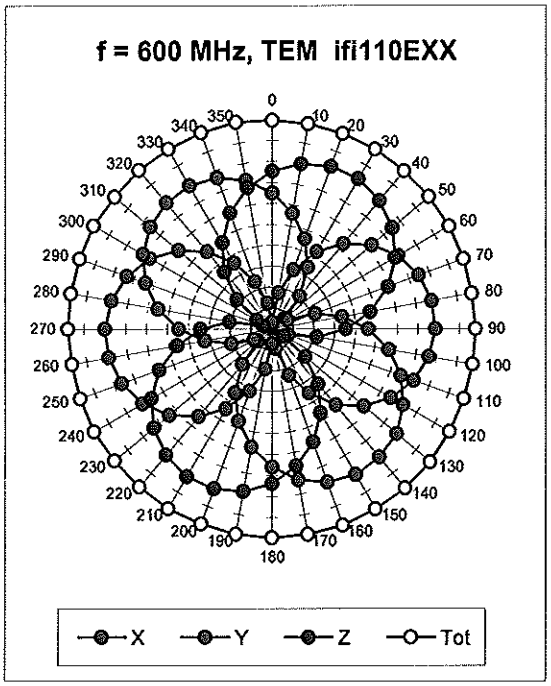


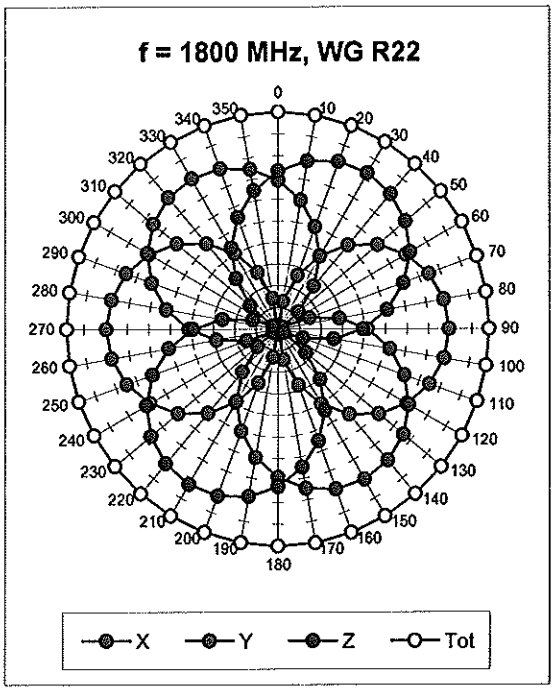


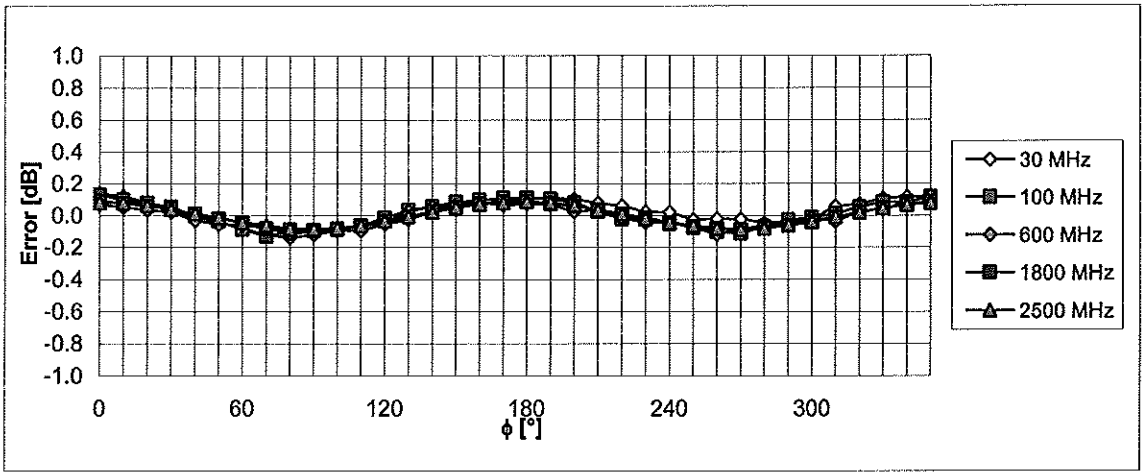


**Uncertainty of Axial Isotropy Assessment: ± 0.5% (k=2)**

# Dynamic Range f($SAR_{head}$)

**(Waveguide R22, f = 1800 MHz)**

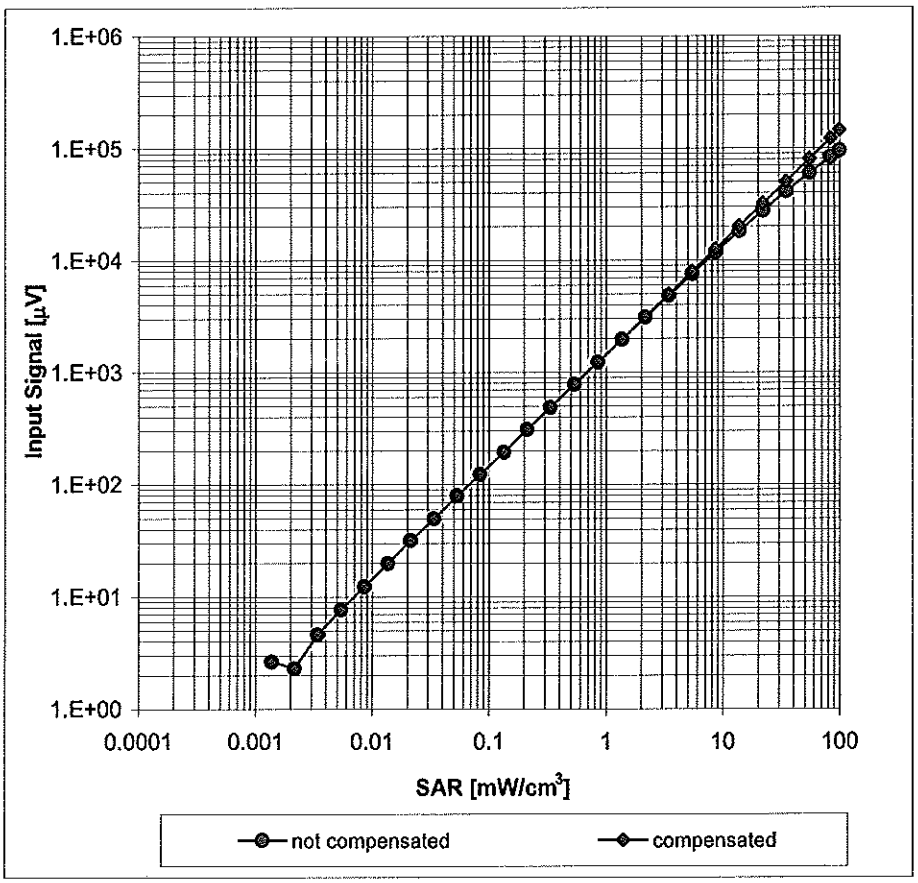


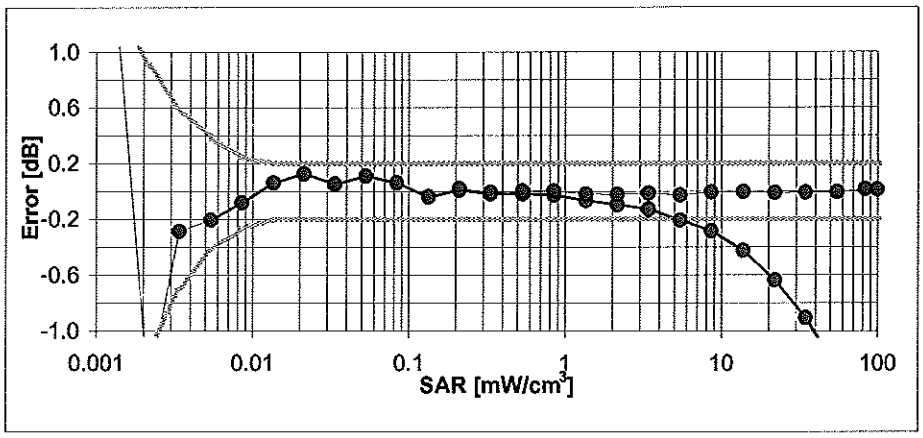


**Uncertainty of Linearity Assessment: ± 0.6% (k=2)**

# Conversion Factor Assessment

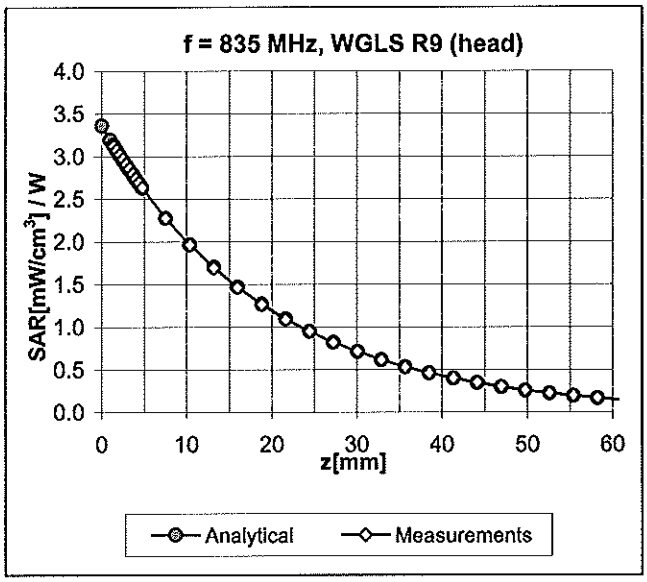


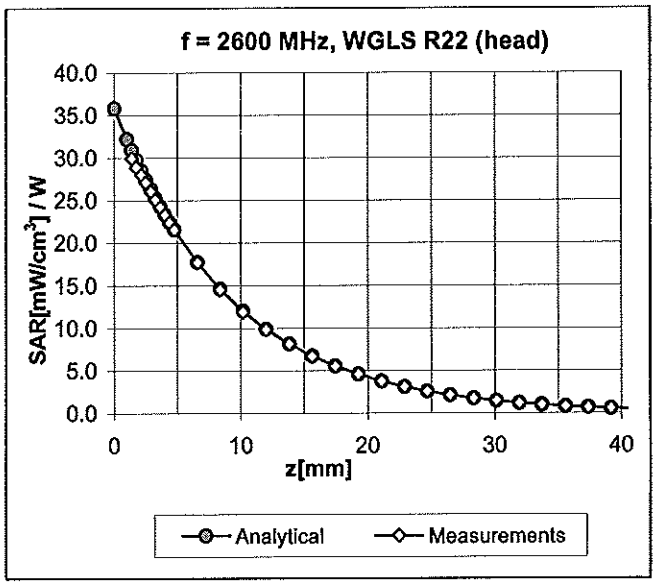


# Deviation from Isotropy in HSL

**Error (ϕ, ϑ), f = 900 MHz**

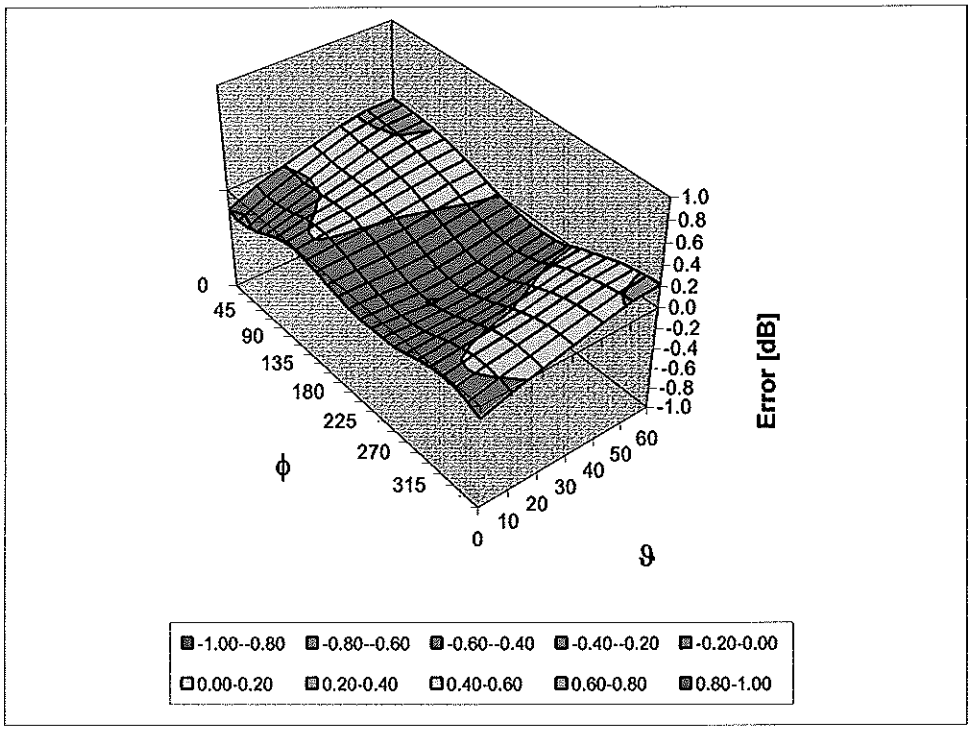


**Uncertainty of Spherical Isotropy Assessment: ± 2.6% (k=2)**

# Other Probe Parameters

| | |
|---|---|
| Sensor Arrangement | Triangular |
| Connector Angle (°) | Not applicable |
| Mechanical Surface Detection Mode | enabled |
| Optical Surface Detection Mode | disabled |
| Probe Overall Length | 337 mm |
| Probe Body Diameter | 10 mm |
| Tip Length | 9 mm |
| Tip Diameter | 2.5 mm |
| Probe Tip to Sensor X Calibration Point | 1 mm |
| Probe Tip to Sensor Y Calibration Point | 1 mm |
| Probe Tip to Sensor Z Calibration Point | 1 mm |
| Recommended Measurement Distance from Surface | 2 mm |

**Calibration Laboratory of**
Schmid & Partner
Engineering AG
**Zeughausstrasse 43, 8004 Zurich, Switzerland**

**S** Schweizerischer Kalibrierdienst
**C** Service suisse d'étalonnage
Servizio svizzero di taratura
**S** Swiss Calibration Service

Accredited by the Swiss Accreditation Service (SAS)
**The Swiss Accreditation Service is one of the signatories to the EA Multilateral Agreement for the recognition of calibration certificates**

**Accreditation No.: SCS 108**

**Client** **PC Test**

**Certificate No: D835V2-4d047_Feb11**

# CALIBRATION CERTIFICATE

| | |
|---|---|
| Object | D835V2 - SN: 4d047 |
| Calibration procedure(s) | QA CAL-05.v8<br>Calibration procedure for dipole validation kits |
| Calibration date: | February 09, 2011 |

✓ 2/24/11 KOK

This calibration certificate documents the traceability to national standards, which realize the physical units of measurements (SI).
The measurements and the uncertainties with confidence probability are given on the following pages and are part of the certificate.

All calibrations have been conducted in the closed laboratory facility: environment temperature (22 ± 3)°C and humidity < 70%.

Calibration Equipment used (M&TE critical for calibration)

| Primary Standards | ID # | Cal Date (Certificate No.) | Scheduled Calibration |
|---|---|---|---|
| Power meter EPM-442A | GB37480704 | 06-Oct-10 (No. 217-01266) | Oct-11 |
| Power sensor HP 8481A | US37292783 | 06-Oct-10 (No. 217-01266) | Oct-11 |
| Reference 20 dB Attenuator | SN: 5086 (20g) | 30-Mar-10 (No. 217-01158) | Mar-11 |
| Type-N mismatch combination | SN: 5047.2 / 06327 | 30-Mar-10 (No. 217-01162) | Mar-11 |
| Reference Probe ES3DV3 | SN: 3205 | 30-Apr-10 (No. ES3-3205_Apr10) | Apr-11 |
| DAE4 | SN: 601 | 10-Jun-10 (No. DAE4-601_Jun10) | Jun-11 |

| Secondary Standards | ID # | Check Date (in house) | Scheduled Check |
|---|---|---|---|
| Power sensor HP 8481A | MY41092317 | 18-Oct-02 (in house check Oct-09) | In house check: Oct-11 |
| RF generator R&S SMT-06 | 100005 | 4-Aug-99 (in house check Oct-09) | In house check: Oct-11 |
| Network Analyzer HP 8753E | US37390585 S4206 | 18-Oct-01 (in house check Oct-10) | In house check: Oct-11 |

| | Name | Function | Signature |
|---|---|---|---|
| Calibrated by: | Dimce Iliev | Laboratory Technician | D. Iliev |
| Approved by: | Katja Pokovic | Technical Manager | |

Issued: February 9, 2011

This calibration certificate shall not be reproduced except in full without written approval of the laboratory.

## Glossary:

| | |
|---|---|
| TSL | tissue simulating liquid |
| ConvF | sensitivity in TSL / NORM x,y,z |
| N/A | not applicable or not measured |

## Calibration is Performed According to the Following Standards:

a) IEEE Std 1528-2003, "IEEE Recommended Practice for Determining the Peak Spatial-Averaged Specific Absorption Rate (SAR) in the Human Head from Wireless Communications Devices: Measurement Techniques", December 2003
b) IEC 62209-1, "Procedure to measure the Specific Absorption Rate (SAR) for hand-held devices used in close proximity to the ear (frequency range of 300 MHz to 3 GHz)", February 2005
c) Federal Communications Commission Office of Engineering & Technology (FCC OET), "Evaluating Compliance with FCC Guidelines for Human Exposure to Radiofrequency Electromagnetic Fields; Additional Information for Evaluating Compliance of Mobile and Portable Devices with FCC Limits for Human Exposure to Radiofrequency Emissions", Supplement C (Edition 01-01) to Bulletin 65

## Additional Documentation:

d) DASY4/5 System Handbook

## Methods Applied and Interpretation of Parameters:

- *Measurement Conditions:* Further details are available from the Validation Report at the end of the certificate. All figures stated in the certificate are valid at the frequency indicated.
- *Antenna Parameters with TSL:* The dipole is mounted with the spacer to position its feed point exactly below the center marking of the flat phantom section, with the arms oriented parallel to the body axis.
- *Feed Point Impedance and Return Loss:* These parameters are measured with the dipole positioned under the liquid filled phantom. The impedance stated is transformed from the measurement at the SMA connector to the feed point. The Return Loss ensures low reflected power. No uncertainty required.
- *Electrical Delay:* One-way delay between the SMA connector and the antenna feed point. No uncertainty required.
- *SAR measured:* SAR measured at the stated antenna input power.
- *SAR normalized:* SAR as measured, normalized to an input power of 1 W at the antenna connector.
- *SAR for nominal TSL parameters:* The measured TSL parameters are used to calculate the nominal SAR result.

## Measurement Conditions

DASY system configuration, as far as not given on page 1.

| | | |
|---|---|---|
| **DASY Version** | DASY5 | V52.6 |
| **Extrapolation** | Advanced Extrapolation | |
| **Phantom** | Modular Flat Phantom V4.9 | |
| **Distance Dipole Center - TSL** | 15 mm | with Spacer |
| **Zoom Scan Resolution** | dx, dy, dz = 5 mm | |
| **Frequency** | 835 MHz ± 1 MHz | |

## Head TSL parameters

The following parameters and calculations were applied.

| | **Temperature** | **Permittivity** | **Conductivity** |
|---|---|---|---|
| **Nominal Head TSL parameters** | 22.0 °C | 41.5 | 0.90 mho/m |
| **Measured Head TSL parameters** | (22.0 ± 0.2) °C | 41.1 ± 6 % | 0.89 mho/m ± 6 % |
| **Head TSL temperature during test** | (21.8 ± 0.2) °C | ---- | ---- |

## SAR result with Head TSL

| **SAR averaged over 1 $cm^3$ (1 g) of Head TSL** | Condition | |
|---|---|---|
| SAR measured | 250 mW input power | 2.37 mW / g |
| SAR normalized | normalized to 1W | 9.48 mW / g |
| SAR for nominal Head TSL parameters | normalized to 1W | **9.53 mW /g ± 17.0 % (k=2)** |

| **SAR averaged over 10 $cm^3$ (10 g) of Head TSL** | condition | |
|---|---|---|
| SAR measured | 250 mW input power | 1.54 mW / g |
| SAR normalized | normalized to 1W | 6.16 mW / g |
| SAR for nominal Head TSL parameters | normalized to 1W | **6.19 mW /g ± 16.5 % (k=2)** |

## Body TSL parameters

The following parameters and calculations were applied.

| | Temperature | Permittivity | Conductivity |
|---|---|---|---|
| **Nominal Body TSL parameters** | 22.0 °C | 55.2 | 0.97 mho/m |
| **Measured Body TSL parameters** | (22.0 ± 0.2) °C | 54.2 ± 6 % | 0.99 mho/m ± 6 % |
| **Body TSL temperature during test** | (22.0 ± 0.2) °C | ---- | ---- |

## SAR result with Body TSL

| **SAR averaged over 1 $cm^3$ (1 g) of Body TSL** | Condition | |
|---|---|---|
| SAR measured | 250 mW input power | 2.51 mW / g |
| SAR normalized | normalized to 1W | 10.0 mW / g |
| SAR for nominal Body TSL parameters | normalized to 1W | **9.85 mW / g ± 17.0 % (k=2)** |

| **SAR averaged over 10 $cm^3$ (10 g) of Body TSL** | condition | |
|---|---|---|
| SAR measured | 250 mW input power | 1.64 mW / g |
| SAR normalized | normalized to 1W | 6.56 mW / g |
| SAR for nominal Body TSL parameters | normalized to 1W | **6.47 mW / g ± 16.5 % (k=2)** |

## Appendix

## Antenna Parameters with Head TSL

| | |
|---|---|
| Impedance, transformed to feed point | 50.1 Ω - 6.2 jΩ |
| Return Loss | - 24.2 dB |

## Antenna Parameters with Body TSL

| | |
|---|---|
| Impedance, transformed to feed point | 45.9 Ω - 8.2 jΩ |
| Return Loss | - 20.4 dB |

## General Antenna Parameters and Design

| | |
|---|---|
| Electrical Delay (one direction) | 1.387 ns |

After long term use with 100W radiated power, only a slight warming of the dipole near the feedpoint can be measured.

The dipole is made of standard semirigid coaxial cable. The center conductor of the feeding line is directly connected to the second arm of the dipole. The antenna is therefore short-circuited for DC-signals.
No excessive force must be applied to the dipole arms, because they might bend or the soldered connections near the feedpoint may be damaged.

## Additional EUT Data

| | |
|---|---|
| Manufactured by | SPEAG |
| Manufactured on | August 16, 2006 |

## DASY5 Validation Report for Head TSL

Date/Time: 09.02.2011 10:54:37

Test Laboratory: SPEAG, Zurich, Switzerland

**DUT: Dipole 835 MHz; Type: D835V2; Serial: D835V2 - SN:4d047**

Communication System: CW; Frequency: 835 MHz; Duty Cycle: 1:1
Medium: HSL900
Medium parameters used: f = 835 MHz; $\sigma$ = 0.89 mho/m; $\varepsilon_r$ = 41; $\rho$ = 1000 kg/m$^3$
Phantom section: Flat Section
Measurement Standard: DASY5 (IEEE/IEC/ANSI C63.19-2007)

DASY5 Configuration:

- Probe: ES3DV3 - SN3205; ConvF(6.03, 6.03, 6.03); Calibrated: 30.04.2010
- Sensor-Surface: 3mm (Mechanical Surface Detection)
- Electronics: DAE4 Sn601; Calibrated: 10.06.2010
- Phantom: Flat Phantom 4.9L; Type: QD000P49AA; Serial: 1001
- Measurement SW: DASY52, V52.6.1 Build (408)
- Postprocessing SW: SEMCAD X, V14.4.2 Build (2595)

**Pin=250 mW /d=15mm, dist=3.0mm (ES-Probe)/Zoom Scan (7x7x7) /Cube 0:** Measurement grid: dx=5mm, dy=5mm, dz=5mm
Reference Value = 57.212 V/m; Power Drift = 0.02 dB
Peak SAR (extrapolated) = 3.567 W/kg
**SAR(1 g) = 2.37 mW/g; SAR(10 g) = 1.54 mW/g**
Maximum value of SAR (measured) = 2.763 mW/g

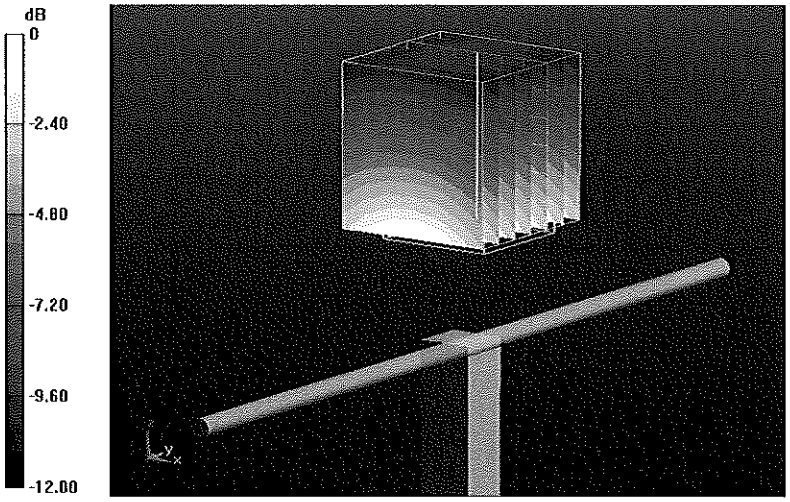


0 dB = 2.760mW/g

## Impedance Measurement Plot for Head TSL

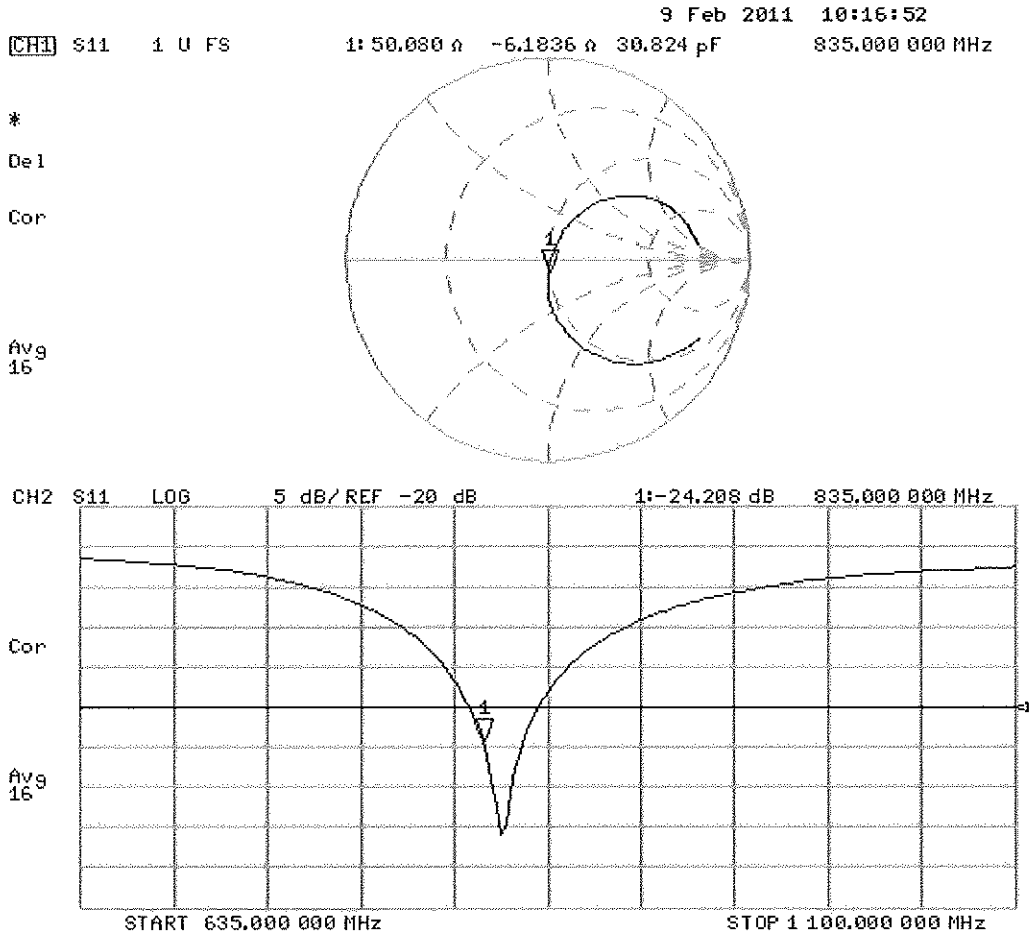

## DASY5 Validation Report for Body TSL

Date/Time: 09.02.2011 13:56:30

Test Laboratory: SPEAG, Zurich, Switzerland

**DUT: Dipole 835 MHz; Type: D835V2; Serial: D835V2 - SN:4d047**

Communication System: CW; Frequency: 835 MHz; Duty Cycle: 1:1
Medium: MSL900
Medium parameters used: f = 835 MHz; $\sigma$ = 0.99 mho/m; $\varepsilon_r$ = 54.2; $\rho$ = 1000 kg/m$^3$
Phantom section: Flat Section
Measurement Standard: DASY5 (IEEE/IEC/ANSI C63.19-2007)

DASY5 Configuration:

- Probe: ES3DV3 - SN3205; ConvF(5.86, 5.86, 5.86); Calibrated: 30.04.2010
- Sensor-Surface: 3mm (Mechanical Surface Detection)
- Electronics: DAE4 Sn601; Calibrated: 10.06.2010
- Phantom: Flat Phantom 4.9L; Type: QD000P49AA; Serial: 1001
- Measurement SW: DASY52, V52.6.1 Build (408)
- Postprocessing SW: SEMCAD X, V14.4.2 Build (2595)

**Pin=250 mW /d=15mm, dist=3.0mm (ES-Probe)/Zoom Scan (7x7x7) /Cube 0:** Measurement grid: dx=5mm, dy=5mm, dz=5mm
Reference Value = 56.092 V/m; Power Drift = 0.02 dB
Peak SAR (extrapolated) = 3.714 W/kg
**SAR(1 g) = 2.51 mW/g; SAR(10 g) = 1.64 mW/g**
Maximum value of SAR (measured) = 2.921 mW/g

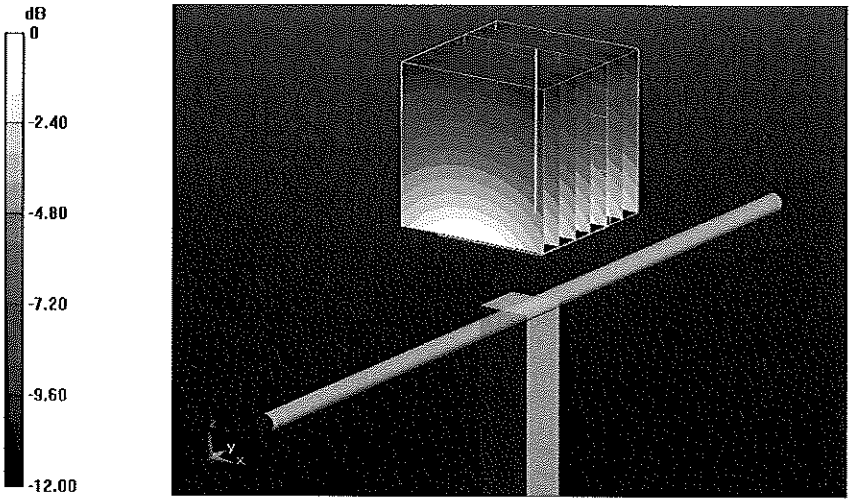


0 dB = 2.920mW/g

## Impedance Measurement Plot for Body TSL

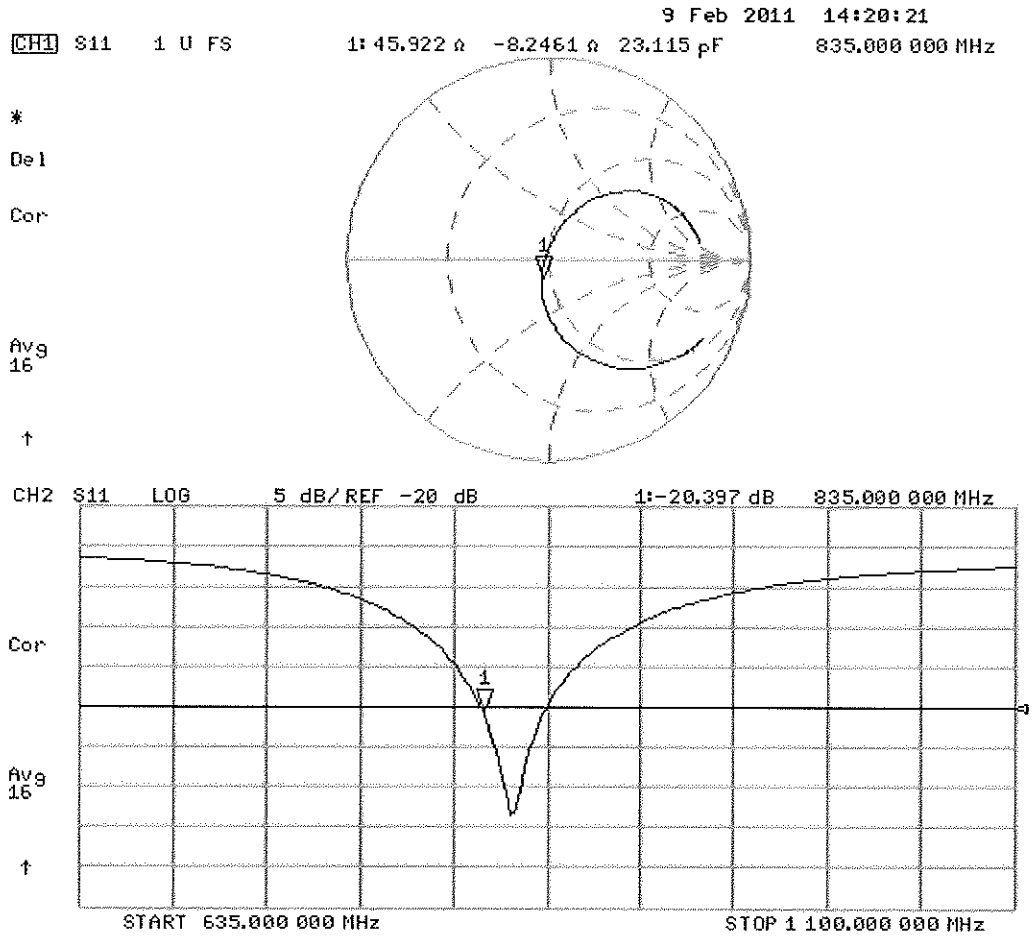

**Calibration Laboratory of**
Schmid & Partner
Engineering AG
**Zeughausstrasse 43, 8004 Zurich, Switzerland**

**S** Schweizerischer Kalibrierdienst
**C** Service suisse d'étalonnage
Servizio svizzero di taratura
**S** Swiss Calibration Service

Accredited by the Swiss Accreditation Service (SAS)
**The Swiss Accreditation Service is one of the signatories to the EA Multilateral Agreement for the recognition of calibration certificates**

**Accreditation No.: SCS 108**

**Client** **PC Test**

**Certificate No: D1900V2-502_Feb11**

# CALIBRATION CERTIFICATE

| | |
|---|---|
| Object | D1900V2 - SN: 502 |
| Calibration procedure(s) | QA CAL-05.v8<br>Calibration procedure for dipole validation kits |
| Calibration date: | February 17, 2011 |

✓ KOK 2/24/11

This calibration certificate documents the traceability to national standards, which realize the physical units of measurements (SI).
The measurements and the uncertainties with confidence probability are given on the following pages and are part of the certificate.

All calibrations have been conducted in the closed laboratory facility: environment temperature (22 ± 3)°C and humidity < 70%.

Calibration Equipment used (M&TE critical for calibration)

| Primary Standards | ID # | Cal Date (Certificate No.) | Scheduled Calibration |
|---|---|---|---|
| Power meter EPM-442A | GB37480704 | 06-Oct-10 (No. 217-01266) | Oct-11 |
| Power sensor HP 8481A | US37292783 | 06-Oct-10 (No. 217-01266) | Oct-11 |
| Reference 20 dB Attenuator | SN: 5086 (20g) | 30-Mar-10 (No. 217-01158) | Mar-11 |
| Type-N mismatch combination | SN: 5047.2 / 06327 | 30-Mar-10 (No. 217-01162) | Mar-11 |
| Reference Probe ES3DV3 | SN: 3205 | 30-Apr-10 (No. ES3-3205_Apr10) | Apr-11 |
| DAE4 | SN: 601 | 10-Jun-10 (No. DAE4-601_Jun10) | Jun-11 |

| Secondary Standards | ID # | Check Date (in house) | Scheduled Check |
|---|---|---|---|
| Power sensor HP 8481A | MY41092317 | 18-Oct-02 (in house check Oct-09) | In house check: Oct-11 |
| RF generator R&S SMT-06 | 100005 | 4-Aug-99 (in house check Oct-09) | In house check: Oct-11 |
| Network Analyzer HP 8753E | US37390585 S4206 | 18-Oct-01 (in house check Oct-10) | In house check: Oct-11 |

| | Name | Function | Signature |
|---|---|---|---|
| Calibrated by: | Dimce Iliev | Laboratory Technician | D. Iliev |
| Approved by: | Katja Pokovic | Technical Manager | |

Issued: February 17, 2011

This calibration certificate shall not be reproduced except in full without written approval of the laboratory.

## Glossary:

| | |
|---|---|
| TSL | tissue simulating liquid |
| ConvF | sensitivity in TSL / NORM x,y,z |
| N/A | not applicable or not measured |

## Calibration is Performed According to the Following Standards:

a) IEEE Std 1528-2003, "IEEE Recommended Practice for Determining the Peak Spatial-Averaged Specific Absorption Rate (SAR) in the Human Head from Wireless Communications Devices: Measurement Techniques", December 2003
b) IEC 62209-1, "Procedure to measure the Specific Absorption Rate (SAR) for hand-held devices used in close proximity to the ear (frequency range of 300 MHz to 3 GHz)", February 2005
c) Federal Communications Commission Office of Engineering & Technology (FCC OET), "Evaluating Compliance with FCC Guidelines for Human Exposure to Radiofrequency Electromagnetic Fields; Additional Information for Evaluating Compliance of Mobile and Portable Devices with FCC Limits for Human Exposure to Radiofrequency Emissions", Supplement C (Edition 01-01) to Bulletin 65

## Additional Documentation:

d) DASY4/5 System Handbook

## Methods Applied and Interpretation of Parameters:

- *Measurement Conditions:* Further details are available from the Validation Report at the end of the certificate. All figures stated in the certificate are valid at the frequency indicated.
- *Antenna Parameters with TSL:* The dipole is mounted with the spacer to position its feed point exactly below the center marking of the flat phantom section, with the arms oriented parallel to the body axis.
- *Feed Point Impedance and Return Loss:* These parameters are measured with the dipole positioned under the liquid filled phantom. The impedance stated is transformed from the measurement at the SMA connector to the feed point. The Return Loss ensures low reflected power. No uncertainty required.
- *Electrical Delay:* One-way delay between the SMA connector and the antenna feed point. No uncertainty required.
- *SAR measured:* SAR measured at the stated antenna input power.
- *SAR normalized:* SAR as measured, normalized to an input power of 1 W at the antenna connector.
- *SAR for nominal TSL parameters:* The measured TSL parameters are used to calculate the nominal SAR result.

## Measurement Conditions

DASY system configuration, as far as not given on page 1.

| | | |
|---|---|---|
| **DASY Version** | DASY5 | V52.6 |
| **Extrapolation** | Advanced Extrapolation | |
| **Phantom** | Modular Flat Phantom V5.0 | |
| **Distance Dipole Center - TSL** | 10 mm | with Spacer |
| **Zoom Scan Resolution** | dx, dy, dz = 5 mm | |
| **Frequency** | 1900 MHz ± 1 MHz | |

## Head TSL parameters

The following parameters and calculations were applied.

| | **Temperature** | **Permittivity** | **Conductivity** |
|---|---|---|---|
| **Nominal Head TSL parameters** | 22.0 °C | 40.0 | 1.40 mho/m |
| **Measured Head TSL parameters** | (22.0 ± 0.2) °C | 39.8 ± 6 % | 1.41 mho/m ± 6 % |
| **Head TSL temperature during test** | (21.5 ± 0.2) °C | ---- | ---- |

## SAR result with Head TSL

| **SAR averaged over 1 $cm^3$ (1 g) of Head TSL** | Condition | |
|---|---|---|
| SAR measured | 250 mW input power | 10.1 mW / g |
| SAR normalized | normalized to 1W | 40.4 mW / g |
| SAR for nominal Head TSL parameters | normalized to 1W | **40.2 mW /g ± 17.0 % (k=2)** |

| **SAR averaged over 10 $cm^3$ (10 g) of Head TSL** | condition | |
|---|---|---|
| SAR measured | 250 mW input power | 5.26 mW / g |
| SAR normalized | normalized to 1W | 21.0 mW / g |
| SAR for nominal Head TSL parameters | normalized to 1W | **21.0 mW /g ± 16.5 % (k=2)** |

## Body TSL parameters

The following parameters and calculations were applied.

| | Temperature | Permittivity | Conductivity |
|---|---|---|---|
| **Nominal Body TSL parameters** | 22.0 °C | 53.3 | 1.52 mho/m |
| **Measured Body TSL parameters** | (22.0 ± 0.2) °C | 52.8 ± 6 % | 1.55 mho/m ± 6 % |
| **Body TSL temperature during test** | (21.5 ± 0.2) °C | ---- | ---- |

## SAR result with Body TSL

| **SAR averaged over 1 $cm^3$ (1 g) of Body TSL** | Condition | |
|---|---|---|
| SAR measured | 250 mW input power | 10.4 mW / g |
| SAR normalized | normalized to 1W | 41.6 mW / g |
| SAR for nominal Body TSL parameters | normalized to 1W | **41.1 mW / g ± 17.0 % (k=2)** |

| **SAR averaged over 10 $cm^3$ (10 g) of Body TSL** | condition | |
|---|---|---|
| SAR measured | 250 mW input power | 5.48 mW / g |
| SAR normalized | normalized to 1W | 21.9 mW / g |
| SAR for nominal Body TSL parameters | normalized to 1W | **21.8 mW / g ± 16.5 % (k=2)** |

## Appendix

## Antenna Parameters with Head TSL

| | |
|---|---|
| Impedance, transformed to feed point | 51.3 Ω + 6.4 jΩ |
| Return Loss | - 23.8 dB |

## Antenna Parameters with Body TSL

| | |
|---|---|
| Impedance, transformed to feed point | 47.3 Ω + 6.7 jΩ |
| Return Loss | - 22.5 dB |

## General Antenna Parameters and Design

| | |
|---|---|
| Electrical Delay (one direction) | 1.206 ns |

After long term use with 100W radiated power, only a slight warming of the dipole near the feedpoint can be measured.

The dipole is made of standard semirigid coaxial cable. The center conductor of the feeding line is directly connected to the second arm of the dipole. The antenna is therefore short-circuited for DC-signals.
No excessive force must be applied to the dipole arms, because they might bend or the soldered connections near the feedpoint may be damaged.

## Additional EUT Data

| | |
|---|---|
| Manufactured by | SPEAG |
| Manufactured on | November 14, 1998 |

## DASY5 Validation Report for Head TSL

Date/Time: 17.02.2011 10:13:23

Test Laboratory: SPEAG, Zurich, Switzerland

**DUT: Dipole 1900 MHz; Type: D1900V2; Serial: D1900V2 - SN:502**

Communication System: CW; Frequency: 1900 MHz; Duty Cycle: 1:1
Medium: HSL U12 BB
Medium parameters used: f = 1900 MHz; $\sigma$ = 1.41 mho/m; $\varepsilon_r$ = 39.9; $\rho$ = 1000 kg/m$^3$
Phantom section: Flat Section
Measurement Standard: DASY5 (IEEE/IEC/ANSI C63.19-2007)

DASY5 Configuration:

- Probe: ES3DV3 - SN3205; ConvF(5.09, 5.09, 5.09); Calibrated: 30.04.2010
- Sensor-Surface: 3mm (Mechanical Surface Detection)
- Electronics: DAE4 Sn601; Calibrated: 10.06.2010
- Phantom: Flat Phantom 5.0 (front); Type: QD000P50AA; Serial: 1001
- Measurement SW: DASY52, V52.6.1 Build (408)
- Postprocessing SW: SEMCAD X, V14.4.2 Build (2595)

**Pin=250 mW /d=10mm, dist=3.0mm (ES-Probe)/Zoom Scan (7x7x7) /Cube 0:** Measurement grid: dx=5mm, dy=5mm, dz=5mm
Reference Value = 97.159 V/m; Power Drift = 0.05 dB
Peak SAR (extrapolated) = 18.519 W/kg
**SAR(1 g) = 10.1 mW/g; SAR(10 g) = 5.26 mW/g**
Maximum value of SAR (measured) = 12.407 mW/g

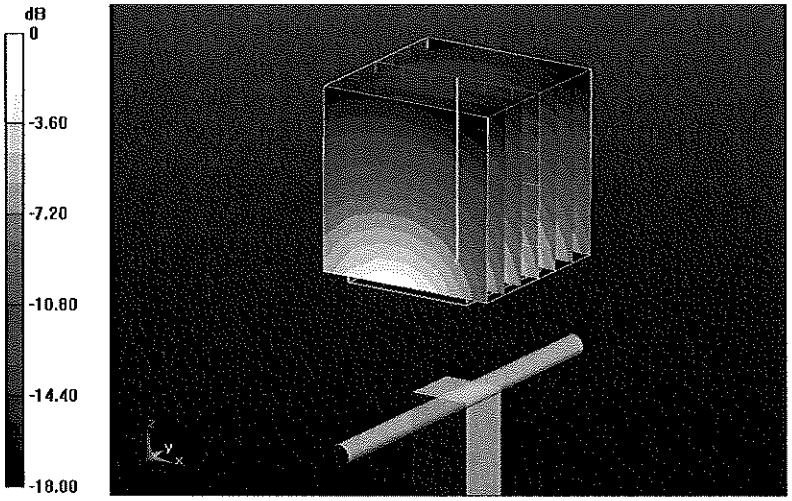


0 dB = 12.410mW/g

## Impedance Measurement Plot for Head TSL

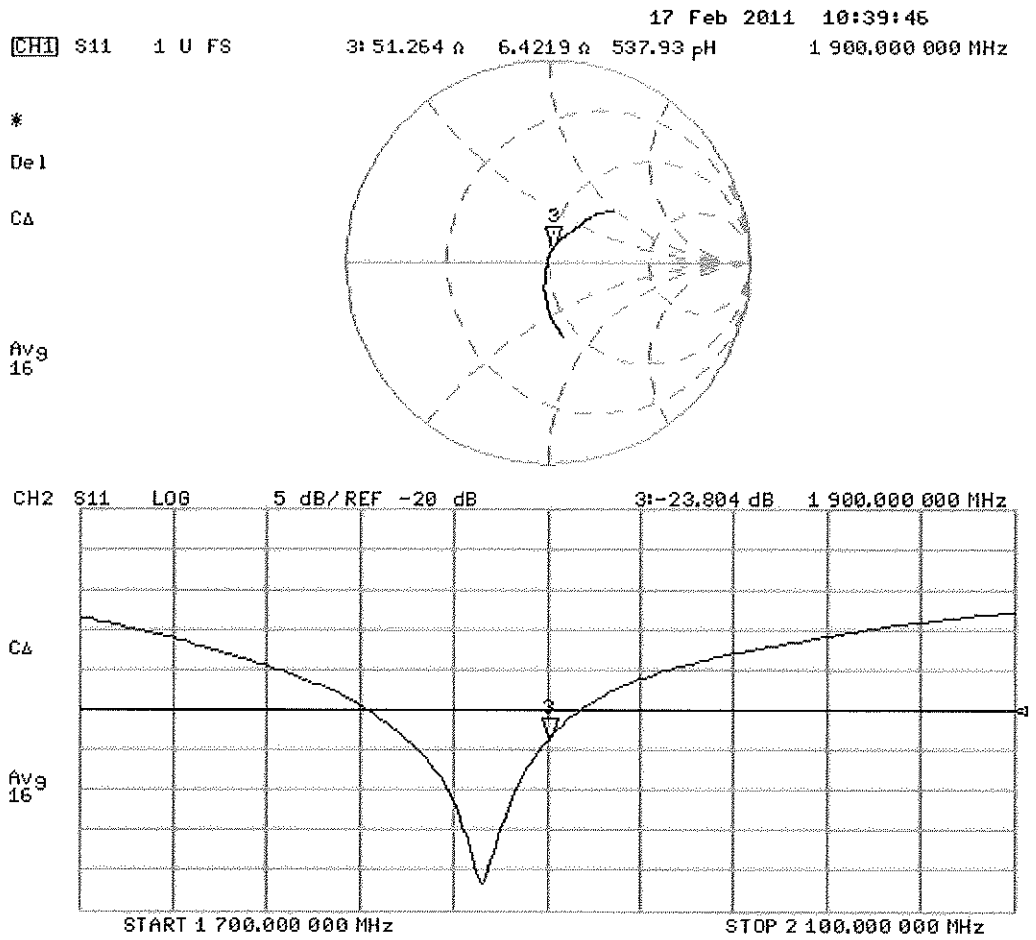

## DASY5 Validation Report for Body TSL

Date/Time: 17.02.2011 10:55:26

Test Laboratory: SPEAG, Zurich, Switzerland

**DUT: Dipole 1900 MHz; Type: D1900V2; Serial: D1900V2 - SN:502**

Communication System: CW; Frequency: 1900 MHz; Duty Cycle: 1:1
Medium: MSL U12 BB
Medium parameters used: f = 1900 MHz; $\sigma$ = 1.55 mho/m; $\varepsilon_r$ = 52.9; $\rho$ = 1000 kg/m$^3$
Phantom section: Flat Section
Measurement Standard: DASY5 (IEEE/IEC/ANSI C63.19-2007)

DASY5 Configuration:

- Probe: ES3DV3 - SN3205; ConvF(4.59, 4.59, 4.59); Calibrated: 30.04.2010
- Sensor-Surface: 3mm (Mechanical Surface Detection)
- Electronics: DAE4 Sn601; Calibrated: 10.06.2010
- Phantom: Flat Phantom 5.0 (back); Type: QD000P50AA; Serial: 1002
- Measurement SW: DASY52, V52.6.1 Build (408)
- Postprocessing SW: SEMCAD X, V14.4.2 Build (2595)

**Pin=250 mW /d=10mm, dist=3.0mm (ES-Probe)/Zoom Scan (7x7x7) /Cube 0:** Measurement grid: dx=5mm, dy=5mm, dz=5mm
Reference Value = 96.636 V/m; Power Drift = -0.02 dB
Peak SAR (extrapolated) = 17.829 W/kg
**SAR(1 g) = 10.4 mW/g; SAR(10 g) = 5.48 mW/g**
Maximum value of SAR (measured) = 13.070 mW/g

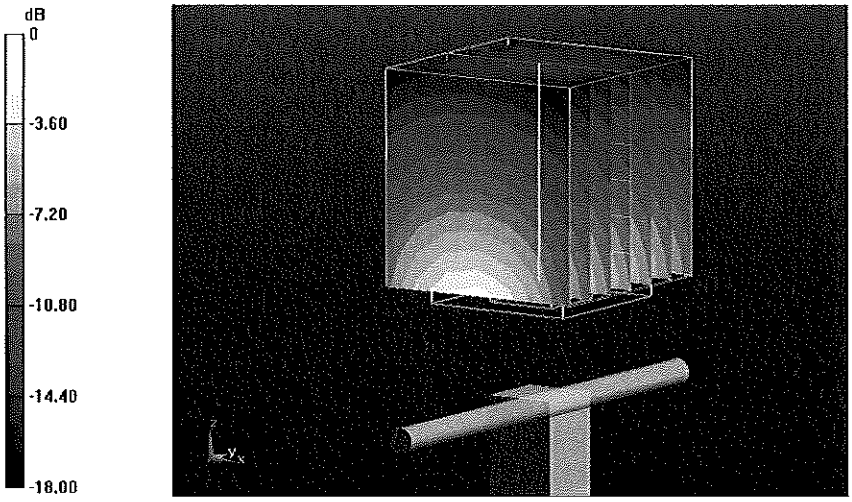


0 dB = 13.070mW/g

## Impedance Measurement Plot for Body TSL

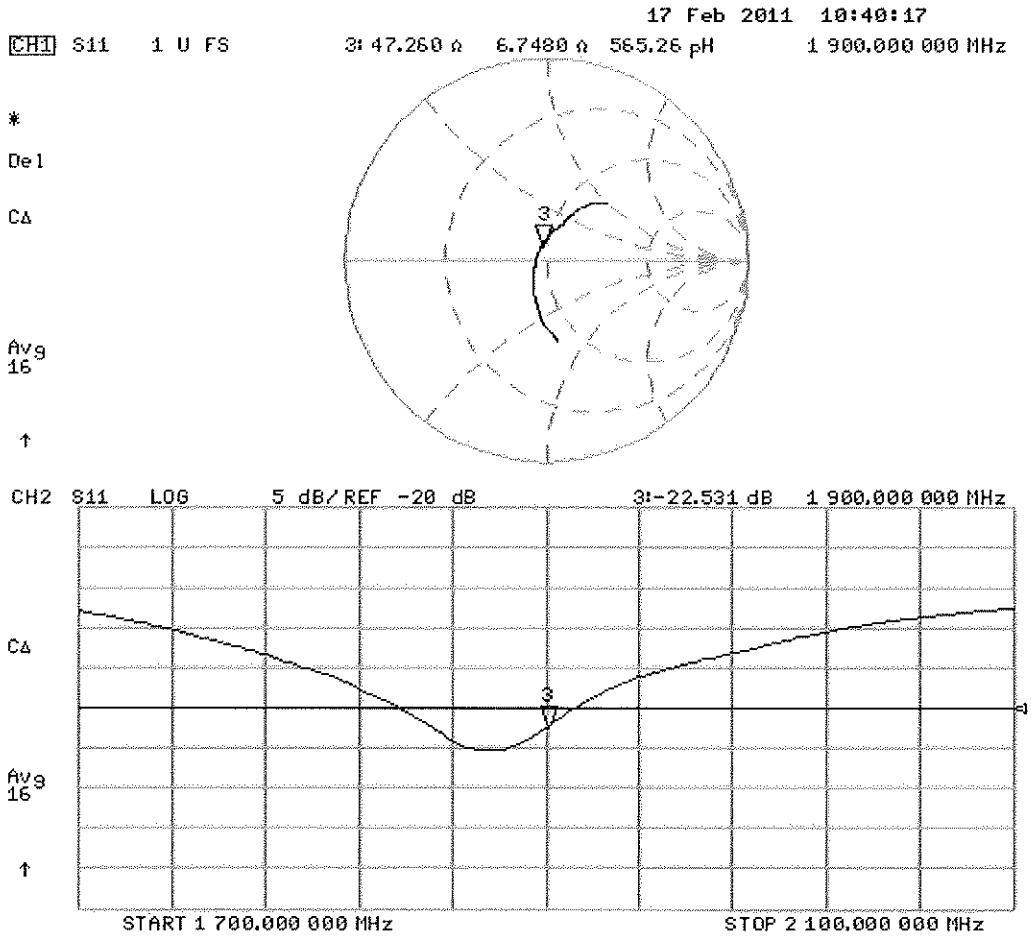

**Calibration Laboratory of**
Schmid & Partner
Engineering AG
**Zeughausstrasse 43, 8004 Zurich, Switzerland**

**S** Schweizerischer Kalibrierdienst
**C** Service suisse d'étalonnage
Servizio svizzero di taratura
**S** Swiss Calibration Service

**Accredited by the Swiss Accreditation Service (SAS)**
**The Swiss Accreditation Service is one of the signatories to the EA Multilateral Agreement for the recognition of calibration certificates**

**Accreditation No.: SCS 108**

**Client** PC Test

**Certificate No: D2450V2-719_Aug09**

# CALIBRATION CERTIFICATE

| | |
|---|---|
| Object | D2450V2 - SN: 719 |
| Calibration procedure(s) | QA CAL-05.v7<br>Calibration procedure for dipole validation kits |
| Calibration date: | August 27, 2009 |
| Condition of the calibrated item | In Tolerance |

✓ OK 8/31/09

This calibration certificate documents the traceability to national standards, which realize the physical units of measurements (SI).
The measurements and the uncertainties with confidence probability are given on the following pages and are part of the certificate.

All calibrations have been conducted in the closed laboratory facility: environment temperature (22 ± 3)°C and humidity < 70%.

Calibration Equipment used (M&TE critical for calibration)

| Primary Standards | ID # | Cal Date (Calibrated by, Certificate No.) | Scheduled Calibration |
|---|---|---|---|
| Power meter EPM-442A | GB37480704 | 08-Oct-08 (No. 217-00898) | Oct-09 |
| Power sensor HP 8481A | US37292783 | 08-Oct-08 (No. 217-00898) | Oct-09 |
| Reference 20 dB Attenuator | SN: 5086 (20g) | 31-Mar-09 (No. 217-01025) | Mar-10 |
| Type-N mismatch combination | SN: 5047.2 / 06327 | 31-Mar-09 (No. 217-01029) | Mar-10 |
| Reference Probe ES3DV3 | SN: 3205 | 26-Jun-09 (No. ES3-3205_Jun09) | Jun-10 |
| DAE4 | SN: 601 | 07-Mar-09 (No. DAE4-601_Mar09) | Mar-10 |

| Secondary Standards | ID # | Check Date (in house) | Scheduled Check |
|---|---|---|---|
| Power sensor HP 8481A | MY41092317 | 18-Oct-02 (in house check Oct-07) | In house check: Oct-09 |
| RF generator R&S SMT-06 | 100005 | 4-Aug-99 (in house check Oct-07) | In house check: Oct-09 |
| Network Analyzer HP 8753E | US37390585 S4206 | 18-Oct-01 (in house check Oct-08) | In house check: Oct-09 |

| | Name | Function | Signature |
|---|---|---|---|
| Calibrated by: | Jeton Kastrati | Laboratory Technician | |
| Approved by: | Katja Pokovic | Technical Manager | |

Issued: August 27, 2009

This calibration certificate shall not be reproduced except in full without written approval of the laboratory.

**Glossary:**

| | |
|---|---|
| TSL | tissue simulating liquid |
| ConvF | sensitivity in TSL / NORM x,y,z |
| N/A | not applicable or not measured |

**Calibration is Performed According to the Following Standards:**

a) IEEE Std 1528-2003, "IEEE Recommended Practice for Determining the Peak Spatial-Averaged Specific Absorption Rate (SAR) in the Human Head from Wireless Communications Devices: Measurement Techniques", December 2003
b) IEC 62209-1, "Procedure to measure the Specific Absorption Rate (SAR) for hand-held devices used in close proximity to the ear (frequency range of 300 MHz to 3 GHz)", February 2005
c) Federal Communications Commission Office of Engineering & Technology (FCC OET), "Evaluating Compliance with FCC Guidelines for Human Exposure to Radiofrequency Electromagnetic Fields; Additional Information for Evaluating Compliance of Mobile and Portable Devices with FCC Limits for Human Exposure to Radiofrequency Emissions", Supplement C (Edition 01-01) to Bulletin 65

**Additional Documentation:**

d) DASY4/5 System Handbook

**Methods Applied and Interpretation of Parameters:**

- *Measurement Conditions:* Further details are available from the Validation Report at the end of the certificate. All figures stated in the certificate are valid at the frequency indicated.
- *Antenna Parameters with TSL:* The dipole is mounted with the spacer to position its feed point exactly below the center marking of the flat phantom section, with the arms oriented parallel to the body axis.
- *Feed Point Impedance and Return Loss:* These parameters are measured with the dipole positioned under the liquid filled phantom. The impedance stated is transformed from the measurement at the SMA connector to the feed point. The Return Loss ensures low reflected power. No uncertainty required.
- *Electrical Delay:* One-way delay between the SMA connector and the antenna feed point. No uncertainty required.
- *SAR measured:* SAR measured at the stated antenna input power.
- *SAR normalized:* SAR as measured, normalized to an input power of 1 W at the antenna connector.
- *SAR for nominal TSL parameters:* The measured TSL parameters are used to calculate the nominal SAR result.

## Measurement Conditions

DASY system configuration, as far as not given on page 1.

| | | |
|---|---|---|
| **DASY Version** | DASY5 | V5.0 |
| **Extrapolation** | Advanced Extrapolation | |
| **Phantom** | Modular Flat Phantom V5.0 | |
| **Distance Dipole Center - TSL** | 10 mm | with Spacer |
| **Zoom Scan Resolution** | dx, dy, dz = 5 mm | |
| **Frequency** | 2450 MHz ± 1 MHz | |

## Head TSL parameters

The following parameters and calculations were applied.

| | **Temperature** | **Permittivity** | **Conductivity** |
|---|---|---|---|
| **Nominal Head TSL parameters** | 22.0 °C | 39.2 | 1.80 mho/m |
| **Measured Head TSL parameters** | (22.0 ± 0.2) °C | 40.1 ± 6 % | 1.80 mho/m ± 6 % |
| **Head TSL temperature during test** | (22.3 ± 0.2) °C | ---- | ---- |

## SAR result with Head TSL

| **SAR averaged over 1 cm³ (1 g) of Head TSL** | Condition | |
|---|---|---|
| SAR measured | 250 mW input power | 13.3 mW / g |
| SAR normalized | normalized to 1W | 53.2 mW / g |
| SAR for nominal Head TSL parameters [1] | normalized to 1W | **53.5 mW /g ± 17.0 % (k=2)** |

| **SAR averaged over 10 cm³ (10 g) of Head TSL** | condition | |
|---|---|---|
| SAR measured | 250 mW input power | 6.23 mW / g |
| SAR normalized | normalized to 1W | 24.9 mW / g |
| SAR for nominal Head TSL parameters [1] | normalized to 1W | **25.0 mW /g ± 16.5 % (k=2)** |

[1] Correction to nominal TSL parameters according to d), chapter "SAR Sensitivities"

## Body TSL parameters

The following parameters and calculations were applied.

| | Temperature | Permittivity | Conductivity |
|---|---|---|---|
| **Nominal Body TSL parameters** | 22.0 °C | 52.7 | 1.95 mho/m |
| **Measured Body TSL parameters** | (22.0 ± 0.2) °C | 53.2 ± 6 % | 2.01 mho/m ± 6 % |
| **Body TSL temperature during test** | (22.5 ± 0.2) °C | ---- | ---- |

## SAR result with Body TSL

| **SAR averaged over 1 cm³ (1 g) of Body TSL** | Condition | |
|---|---|---|
| SAR measured | 250 mW input power | 13.0 mW / g |
| SAR normalized | normalized to 1W | 52.0 mW / g |
| SAR for nominal Body TSL parameters [2] | normalized to 1W | **51.4 mW /g ± 17.0 % (k=2)** |

| **SAR averaged over 10 cm³ (10 g) of Body TSL** | condition | |
|---|---|---|
| SAR measured | 250 mW input power | 6.00 mW / g |
| SAR normalized | normalized to 1W | 24.0 mW / g |
| SAR for nominal Body TSL parameters [2] | normalized to 1W | **23.9 mW /g ± 16.5 % (k=2)** |

[2] Correction to nominal TSL parameters according to d), chapter "SAR Sensitivities"

## Appendix

## Antenna Parameters with Head TSL

| | |
|---|---|
| Impedance, transformed to feed point | 53.4 Ω + 1.8 jΩ |
| Return Loss | - 28.6 dB |

## Antenna Parameters with Body TSL

| | |
|---|---|
| Impedance, transformed to feed point | 48.2 Ω + 3.9 jΩ |
| Return Loss | - 27.2 dB |

## General Antenna Parameters and Design

| | |
|---|---|
| Electrical Delay (one direction) | 1.150 ns |

After long term use with 100W radiated power, only a slight warming of the dipole near the feedpoint can be measured.

The dipole is made of standard semirigid coaxial cable. The center conductor of the feeding line is directly connected to the second arm of the dipole. The antenna is therefore short-circuited for DC-signals.
No excessive force must be applied to the dipole arms, because they might bend or the soldered connections near the feedpoint may be damaged.

## Additional EUT Data

| | |
|---|---|
| Manufactured by | SPEAG |
| Manufactured on | September 10, 2002 |

## DASY5 Validation Report for Head TSL

Date/Time: 27.08.2009 11:14:47

Test Laboratory: SPEAG, Zurich, Switzerland

**DUT: Dipole 2450 MHz; Type: D2450V2; Serial: D2450V2 - SN719**

Communication System: CW; Frequency: 2450 MHz; Duty Cycle: 1:1
Medium: HSL U11 BB
Medium parameters used: f = 2450 MHz; $\sigma$ = 1.8 mho/m; $\varepsilon_r$ = 40.1; $\rho$ = 1000 kg/m$^3$
Phantom section: Flat Section
Measurement Standard: DASY5 (IEEE/IEC)

DASY5 Configuration:

- Probe: ES3DV3 - SN3205; ConvF(4.53, 4.53, 4.53); Calibrated: 26.06.2009
- Sensor-Surface: 3mm (Mechanical Surface Detection)
- Electronics: DAE4 Sn601; Calibrated: 07.03.2009
- Phantom: Flat Phantom 5.0 (front); Type: QD000P50AA; Serial: 1001
- Measurement SW: DASY5, V5.0 Build 120; SEMCAD X Version 13.4 Build 45

**Pin = 250 mW; d = 10 mm/Zoom Scan (7x7x7)/Cube 0:** Measurement grid: dx=5mm, dy=5mm, dz=5mm
Reference Value = 101.4 V/m; Power Drift = 0.025 dB
Peak SAR (extrapolated) = 27 W/kg
**SAR(1 g) = 13.3 mW/g; SAR(10 g) = 6.23 mW/g**
Maximum value of SAR (measured) = 17.2 mW/g

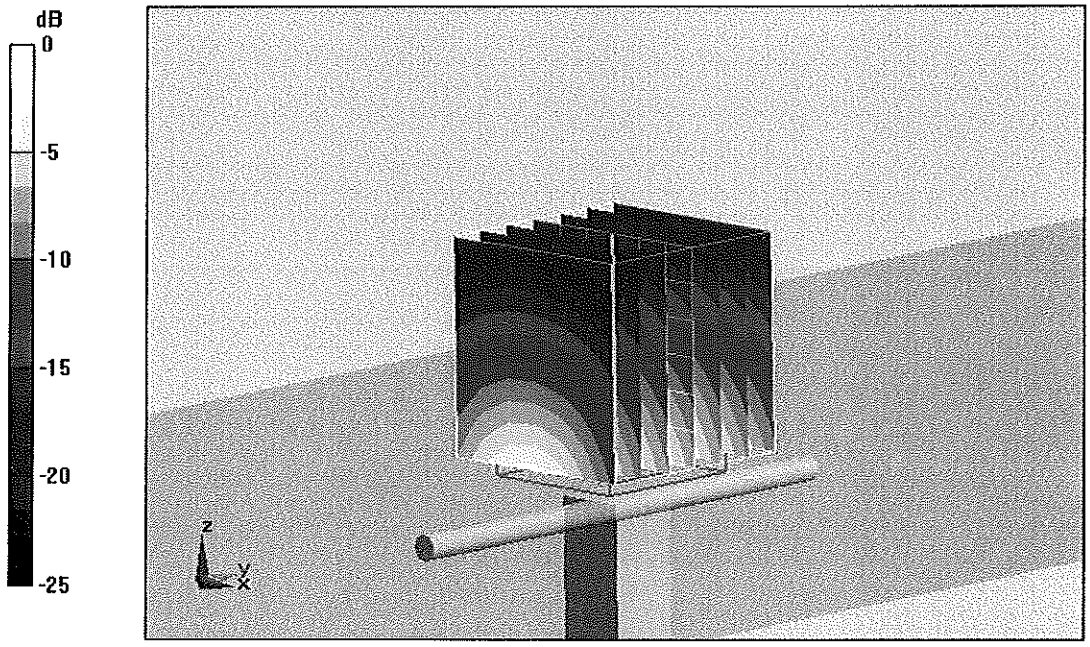


0 dB = 17.2mW/g

## Impedance Measurement Plot for Head TSL

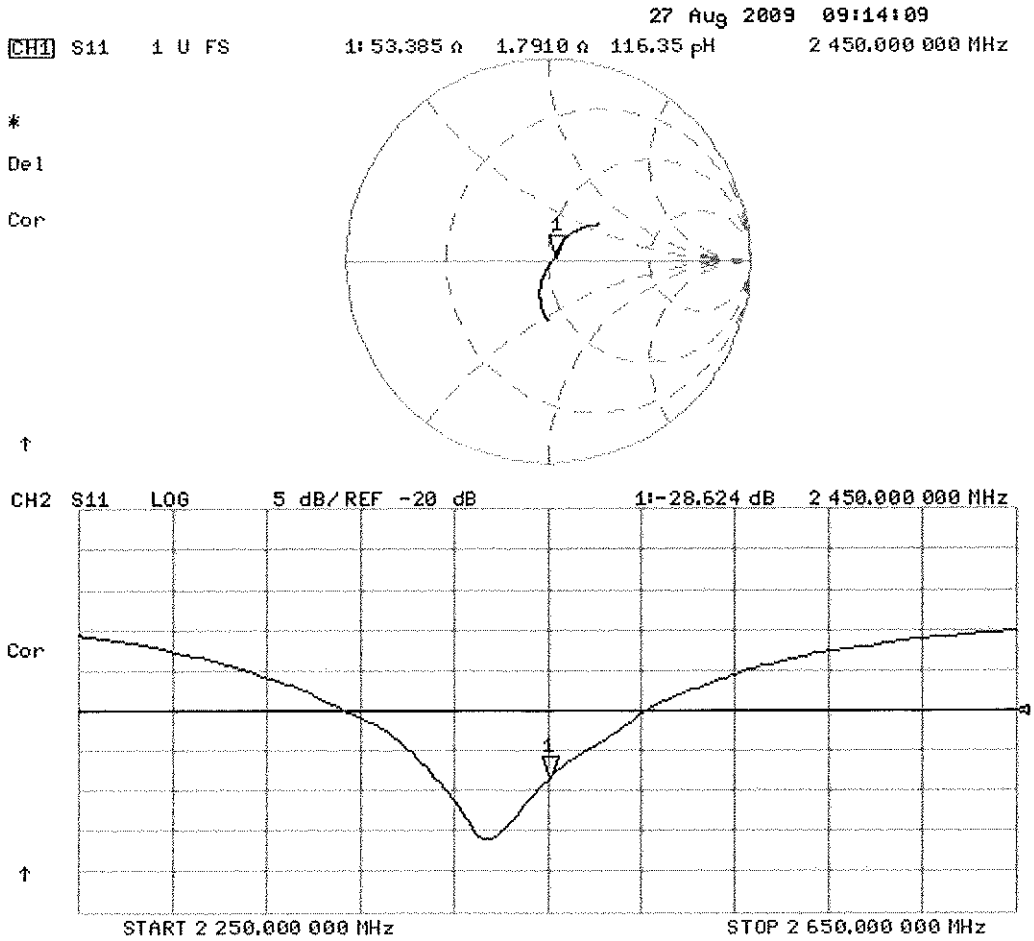

## DASY5 Validation Report for Body TSL

Date/Time: 17.08.2009 15:35:28

Test Laboratory: SPEAG, Zurich, Switzerland

**DUT: Dipole 2450 MHz; Type: D2450V2; Serial: D2450V2 - SN:719**

Communication System: CW; Frequency: 2450 MHz; Duty Cycle: 1:1
Medium: MSL U10 BB
Medium parameters used: f = 2450 MHz; $\sigma$ = 2.01 mho/m; $\varepsilon_r$ = 53.1; $\rho$ = 1000 kg/m$^3$
Phantom section: Flat Section
Measurement Standard: DASY5 (IEEE/IEC)

DASY5 Configuration:

- Probe: ES3DV3 - SN3205; ConvF(4.31, 4.31, 4.31); Calibrated: 26.06.2009
- Sensor-Surface: 3mm (Mechanical Surface Detection)
- Electronics: DAE4 Sn601; Calibrated: 07.03.2009
- Phantom: Flat Phantom 5.0 (back); Type: QD000P50AA; Serial: 1002
- Measurement SW: DASY5, V5.0 Build 120; SEMCAD X Version 13.4 Build 45

**Pin = 250 mW; d = 10 mm/Zoom Scan (7x7x7)/Cube 0:** Measurement grid: dx=5mm, dy=5mm, dz=5mm
Reference Value = 94.8 V/m; Power Drift = -0.00649 dB
Peak SAR (extrapolated) = 27.2 W/kg
**SAR(1 g) = 13 mW/g; SAR(10 g) = 6 mW/g**
Maximum value of SAR (measured) = 17 mW/g

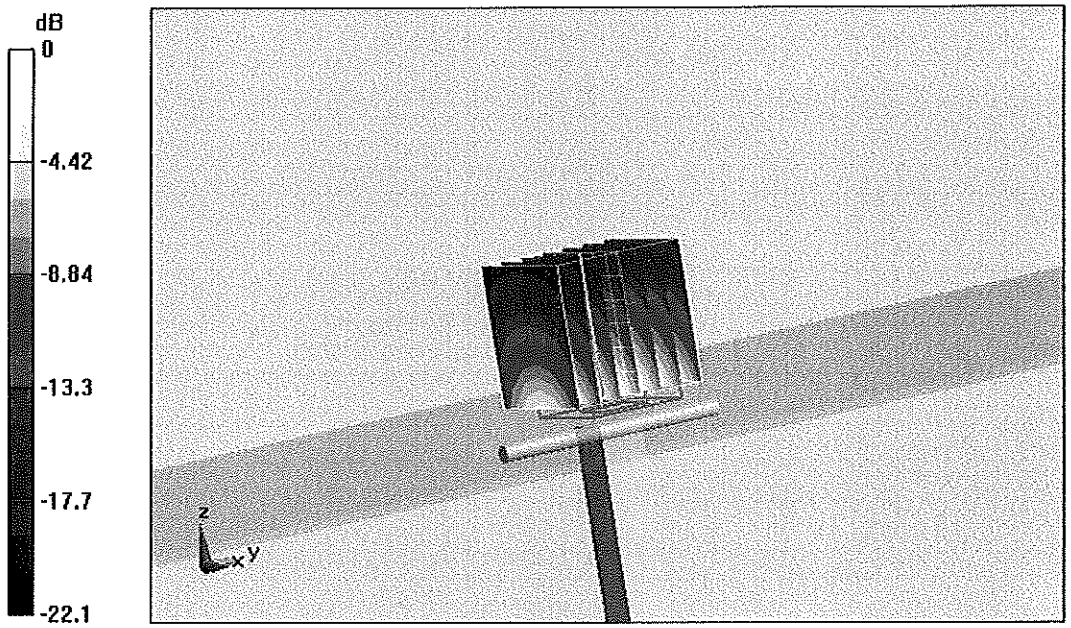


0 dB = 17mW/g

## Impedance Measurement Plot for Body TSL

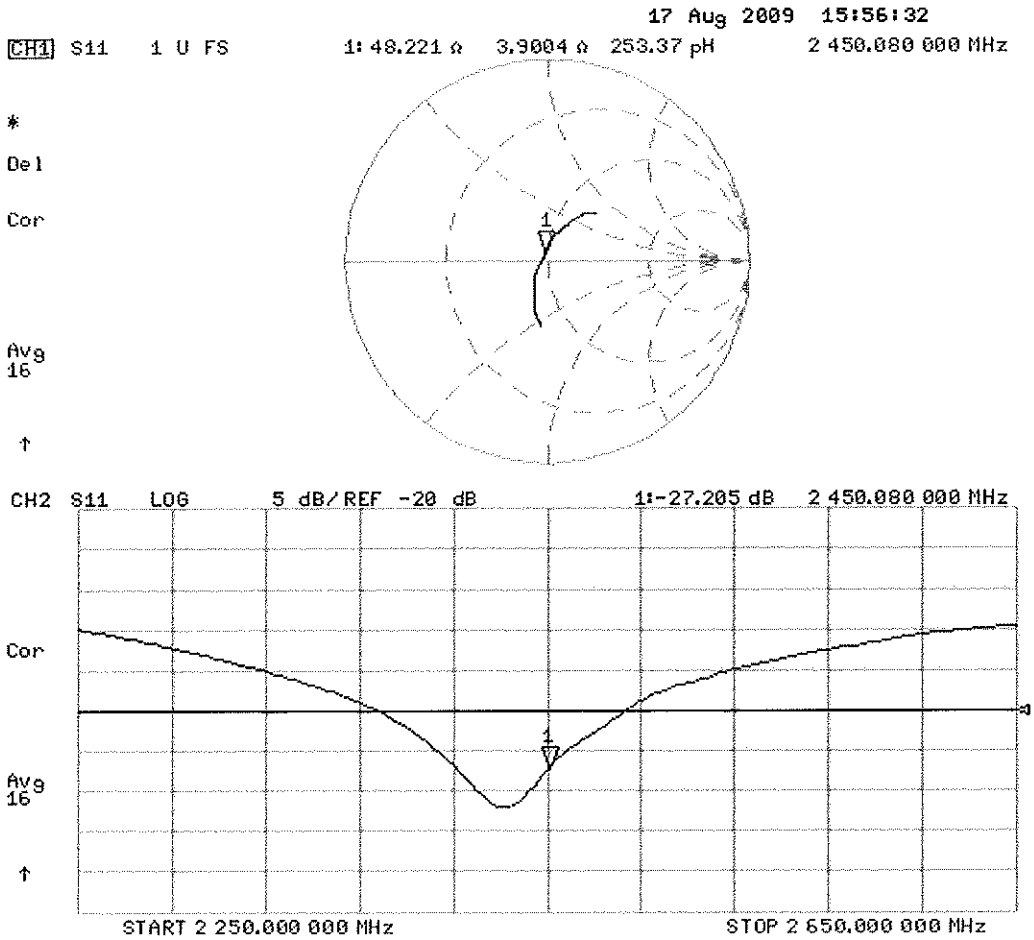

**Calibration Laboratory of**
Schmid & Partner
Engineering AG
**Zeughausstrasse 43, 8004 Zurich, Switzerland**

**S** Schweizerischer Kalibrierdienst
**C** Service suisse d'étalonnage
Servizio svizzero di taratura
**S** Swiss Calibration Service

Accredited by the Swiss Accreditation Service (SAS)
**The Swiss Accreditation Service is one of the signatories to the EA Multilateral Agreement for the recognition of calibration certificates**

**Accreditation No.: SCS 108**

**Client** SPEAG Replacement

**Certificate No: D2600V2_1027_Jun10**

# CALIBRATION CERTIFICATE

| | |
|---|---|
| Object | D2600V2 - SN: 1027 |
| Calibration procedure(s) | QA CAL-05.v7<br>Calibration procedure for dipole validation kits |
| Calibration date: | June 17, 2010 |

L

ICAL 4/7/11

This calibration certificate documents the traceability to national standards, which realize the physical units of measurements (SI).
The measurements and the uncertainties with confidence probability are given on the following pages and are part of the certificate.

All calibrations have been conducted in the closed laboratory facility: environment temperature (22 ± 3)°C and humidity < 70%.

Calibration Equipment used (M&TE critical for calibration)

| Primary Standards | ID # | Cal Date (Certificate No.) | Scheduled Calibration |
|---|---|---|---|
| Power meter EPM-442A | GB37480704 | 06-Oct-09 (No. 217-01086) | Oct-10 |
| Power sensor HP 8481A | US37292783 | 06-Oct-09 (No. 217-01086) | Oct-10 |
| Reference 20 dB Attenuator | SN: 5086 (20g) | 30-Mar-10 (No. 217-01158) | Mar-11 |
| Type-N mismatch combination | SN: 5047.2 / 06327 | 30-Mar-10 (No. 217-01162) | Mar-11 |
| Reference Probe ES3DV3 | SN: 3205 | 30-Apr-10 (No. ES3-3205_Apr10) | Apr-11 |
| DAE4 | SN: 601 | 10-Jun-10 (No. DAE4-601_Jun10) | Jun-11 |

| Secondary Standards | ID # | Check Date (in house) | Scheduled Check |
|---|---|---|---|
| Power sensor HP 8481A | MY41092317 | 18-Oct-02 (in house check Oct-09) | In house check: Oct-11 |
| RF generator R&S SMT-06 | 100005 | 4-Aug-99 (in house check Oct-09) | In house check: Oct-11 |
| Network Analyzer HP 8753E | US37390585 S4206 | 18-Oct-01 (in house check Oct-09) | In house check: Oct-10 |

| | Name | Function | Signature |
|---|---|---|---|
| Calibrated by: | Claudio Leubler | Laboratory Technician | |
| Approved by: | Katja Pokovic | Technical Manager | |

Issued: June 21, 2010

This calibration certificate shall not be reproduced except in full without written approval of the laboratory.

## Glossary:

| | |
|---|---|
| TSL | tissue simulating liquid |
| ConvF | sensitivity in TSL / NORM x,y,z |
| N/A | not applicable or not measured |

## Calibration is Performed According to the Following Standards:

a) IEEE Std 1528-2003, "IEEE Recommended Practice for Determining the Peak Spatial-Averaged Specific Absorption Rate (SAR) in the Human Head from Wireless Communications Devices: Measurement Techniques", December 2003
b) IEC 62209-1, "Procedure to measure the Specific Absorption Rate (SAR) for hand-held devices used in close proximity to the ear (frequency range of 300 MHz to 3 GHz)", February 2005
c) Federal Communications Commission Office of Engineering & Technology (FCC OET), "Evaluating Compliance with FCC Guidelines for Human Exposure to Radiofrequency Electromagnetic Fields; Additional Information for Evaluating Compliance of Mobile and Portable Devices with FCC Limits for Human Exposure to Radiofrequency Emissions", Supplement C (Edition 01-01) to Bulletin 65

## Additional Documentation:

d) DASY4/5 System Handbook

## Methods Applied and Interpretation of Parameters:

- *Measurement Conditions:* Further details are available from the Validation Report at the end of the certificate. All figures stated in the certificate are valid at the frequency indicated.
- *Antenna Parameters with TSL:* The dipole is mounted with the spacer to position its feed point exactly below the center marking of the flat phantom section, with the arms oriented parallel to the body axis.
- *Feed Point Impedance and Return Loss:* These parameters are measured with the dipole positioned under the liquid filled phantom. The impedance stated is transformed from the measurement at the SMA connector to the feed point. The Return Loss ensures low reflected power. No uncertainty required.
- *Electrical Delay:* One-way delay between the SMA connector and the antenna feed point. No uncertainty required.
- *SAR measured:* SAR measured at the stated antenna input power.
- *SAR normalized:* SAR as measured, normalized to an input power of 1 W at the antenna connector.
- *SAR for nominal TSL parameters:* The measured TSL parameters are used to calculate the nominal SAR result.

## Measurement Conditions

DASY system configuration, as far as not given on page 1.

| | | |
|---|---|---|
| **DASY Version** | DASY5 | V52.2 |
| **Extrapolation** | Advanced Extrapolation | |
| **Phantom** | Modular Flat Phantom V5.0 | |
| **Distance Dipole Center - TSL** | 10 mm | with Spacer |
| **Zoom Scan Resolution** | dx, dy, dz = 5 mm | |
| **Frequency** | 2600 MHz ± 1 MHz | |

## Head TSL parameters

The following parameters and calculations were applied.

| | **Temperature** | **Permittivity** | **Conductivity** |
|---|---|---|---|
| **Nominal Head TSL parameters** | 22.0 °C | 39.0 | 1.96 mho/m |
| **Measured Head TSL parameters** | (22.0 ± 0.2) °C | 38.6 ± 6 % | 1.90 mho/m ± 6 % |
| **Head TSL temperature during test** | (21.8 ± 0.2) °C | ------- | ------ |

## SAR result with Head TSL

| **SAR averaged over 1 $cm^3$ (1 g) of Head TSL** | Condition | |
|---|---|---|
| SAR measured | 250 mW input power | 14.2 mW / g |
| SAR normalized | normalized to 1W | 56.8 mW / g |
| SAR for nominal Head TSL parameters | normalized to 1W | **57.4 mW / g ± 17.0 % (k=2)** |

| **SAR averaged over 10 $cm^3$ (10 g) of Head TSL** | condition | |
|---|---|---|
| SAR measured | 250 mW input power | 6.40 mW / g |
| SAR normalized | normalized to 1W | 25.6 mW / g |
| SAR for nominal Head TSL parameters | normalized to 1W | **25.7 mW / g ± 16.5 % (k=2)** |

## Body TSL parameters

The following parameters and calculations were applied.

| | Temperature | Permittivity | Conductivity |
|---|---|---|---|
| **Nominal Body TSL parameters** | 22.0 °C | 52.5 | 2.16 mho/m |
| **Measured Body TSL parameters** | (22.0 ± 0.2) °C | 52.5 ± 6 % | 2.10 mho/m ± 6 % |
| **Body TSL temperature during test** | (22.0 ± 0.2) °C | ------- | ------ |

## SAR result with Body TSL

| **SAR averaged over 1 $cm^3$ (1 g) of Body TSL** | condition | |
|---|---|---|
| SAR measured | 250 mW input power | 14.5 mW / g |
| SAR normalized | normalized to 1W | 58.0 mW / g |
| SAR for nominal Body TSL parameters | normalized to 1W | **58.7 mW / g ± 17.0 % (k=2)** |

| **SAR averaged over 10 $cm^3$ (10 g) of Body TSL** | condition | |
|---|---|---|
| SAR measured | 250 mW input power | 6.54 mW / g |
| SAR normalized | normalized to 1W | 26.2 mW / g |
| SAR for nominal Body TSL parameters | normalized to 1W | **26.3 mW / g ± 16.5 % (k=2)** |

## Appendix

### Antenna Parameters with Head TSL

| | |
|---|---|
| Impedance, transformed to feed point | 49.2 Ω - 3.9 jΩ |
| Return Loss | - 28.0 dB |

### Antenna Parameters with Body TSL

| | |
|---|---|
| Impedance, transformed to feed point | 46.8 Ω - 2.2 jΩ |
| Return Loss | - 28.0 dB |

### General Antenna Parameters and Design

| | |
|---|---|
| Electrical Delay (one direction) | 1.147 ns |

After long term use with 100W radiated power, only a slight warming of the dipole near the feedpoint can be measured.

The dipole is made of standard semirigid coaxial cable. The center conductor of the feeding line is directly connected to the second arm of the dipole. The antenna is therefore short-circuited for DC-signals.
No excessive force must be applied to the dipole arms, because they might bend or the soldered connections near the feedpoint may be damaged.

### Additional EUT Data

| | |
|---|---|
| Manufactured by | SPEAG |
| Manufactured on | March 03, 2009 |

## DASY5 Validation Report for Head TSL

Date/Time: 16.06.2010 16:00:53

Test Laboratory: SPEAG, Zurich, Switzerland

**DUT: Dipole 2600 MHz; Type: D2600V2; Serial: D2600V2 - SN:1027**

Communication System: CW; Frequency: 2600 MHz; Duty Cycle: 1:1
Medium: HSL U11 BB
Medium parameters used: f = 2600 MHz; $\sigma$ = 1.9 mho/m; $\varepsilon_r$ = 38.6; $\rho$ = 1000 kg/m$^3$
Phantom section: Flat Section
Measurement Standard: DASY5 (IEEE/IEC/ANSI C63.19-2007)

DASY5 Configuration:

- Probe: ES3DV3 - SN3205; ConvF(4.47, 4.47, 4.47); Calibrated: 30.04.2010
- Sensor-Surface: 3mm (Mechanical Surface Detection)
- Electronics: DAE4 Sn601; Calibrated: 10.06.2010
- Phantom: Flat Phantom 5.0 (front); Type: QD000P50AA; Serial: 1001
- Measurement SW: DASY52, V52.2 Build 0, Version 52.2.0 (163)
- Postprocessing SW: SEMCAD X, V14.2 Build 2, Version 14.2.2 (1685)

### Head/d=10mm, Pin=250 mW, dist=3.0mm (ES-Probe)/Zoom Scan (7x7x7) (7x7x7)/Cube 0:

Measurement grid: dx=5mm, dy=5mm, dz=5mm
Reference Value = 102.2 V/m; Power Drift = -0.00927 dB
Peak SAR (extrapolated) = 29.9 W/kg
**SAR(1 g) = 14.2 mW/g; SAR(10 g) = 6.4 mW/g**
Maximum value of SAR (measured) = 18 mW/g

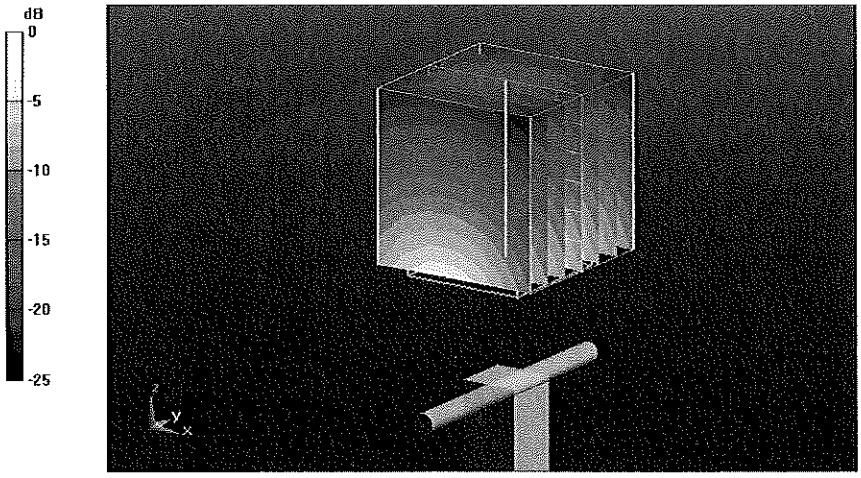


0 dB = 18mW/g

## Impedance Measurement Plot for Head TSL

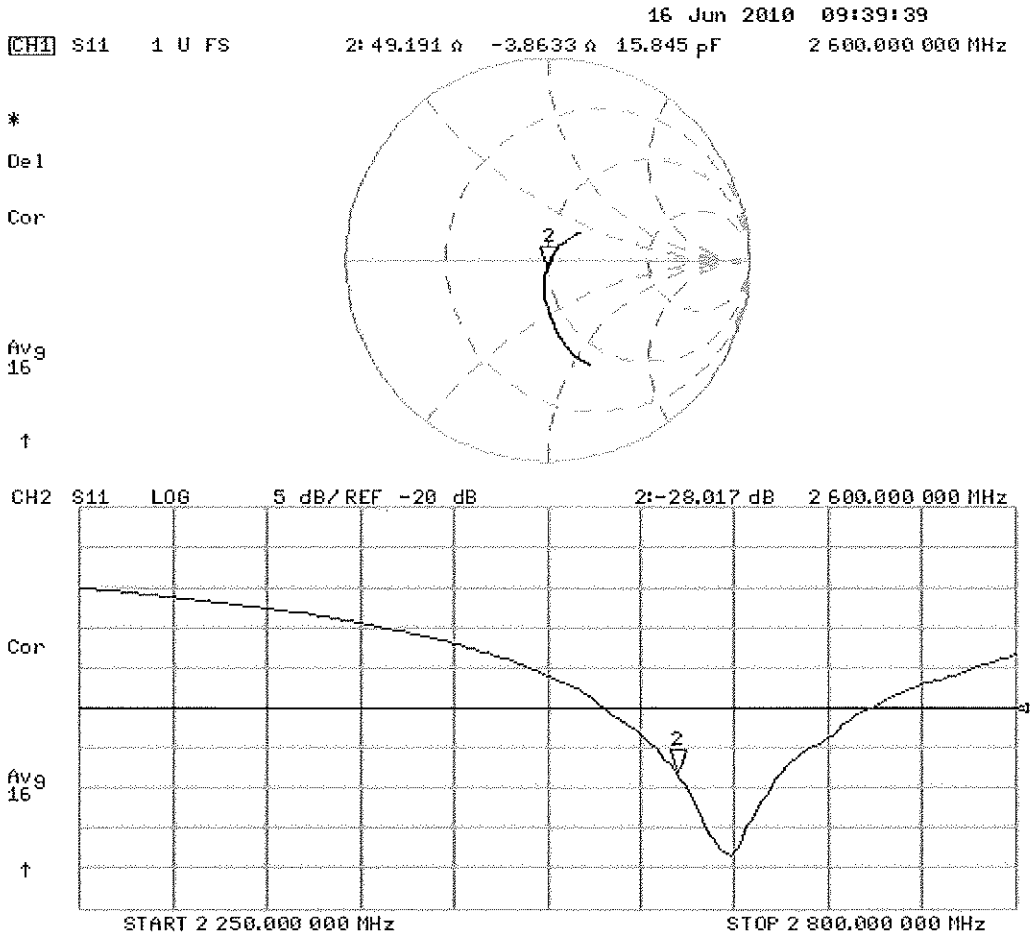

## DASY5 Validation Report for Body TSL

Date/Time: 17.06.2010 14:25:52

Test Laboratory: SPEAG, Zurich, Switzerland

**DUT: Dipole 2600 MHz; Type: D2600V2; Serial: D2600V2 - SN:1027**

Communication System: CW; Frequency: 2600 MHz; Duty Cycle: 1:1
Medium: MSL U11 BB
Medium parameters used: f = 2600 MHz; $\sigma$ = 2.1 mho/m; $\varepsilon_r$ = 52.5; $\rho$ = 1000 kg/m$^3$
Phantom section: Flat Section
Measurement Standard: DASY5 (IEEE/IEC/ANSI C63.19-2007)

DASY5 Configuration:

- Probe: ES3DV3 - SN3205; ConvF(4.18, 4.18, 4.18); Calibrated: 30.04.2010
- Sensor-Surface: 3mm (Mechanical Surface Detection)
- Electronics: DAE4 Sn601; Calibrated: 10.06.2010
- Phantom: Flat Phantom 5.0 (back); Type: QD000P50AA; Serial: 1002
- Measurement SW: DASY52, V52.2 Build 0, Version 52.2.0 (163)
- Postprocessing SW: SEMCAD X, V14.2 Build 2, Version 14.2.2 (1685)

### Body/d=10mm, Pin250 mW, dist=3.0mm (ES-Probe)/Zoom Scan (7x7x7) (7x7x7)/Cube 0:

Measurement grid: dx=5mm, dy=5mm, dz=5mm
Reference Value = 97.9 V/m; Power Drift = 0.00687 dB
Peak SAR (extrapolated) = 31.1 W/kg
**SAR(1 g) = 14.5 mW/g; SAR(10 g) = 6.54 mW/g**
Maximum value of SAR (measured) = 19.3 mW/g

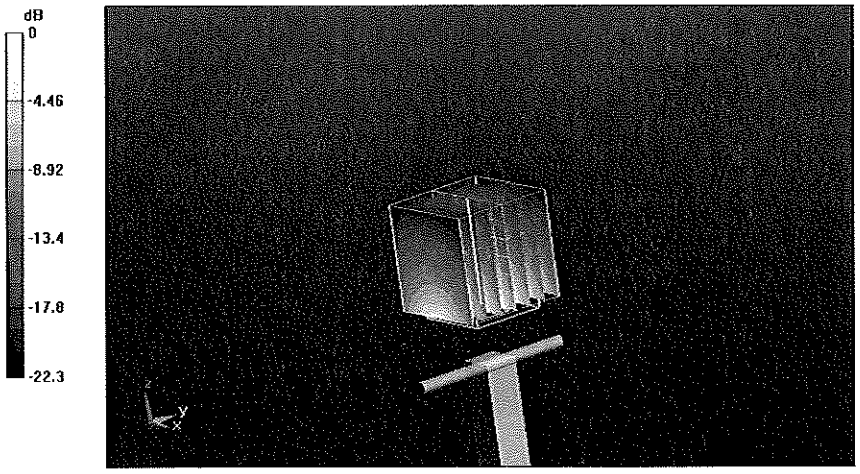


0 dB = 19.3mW/g
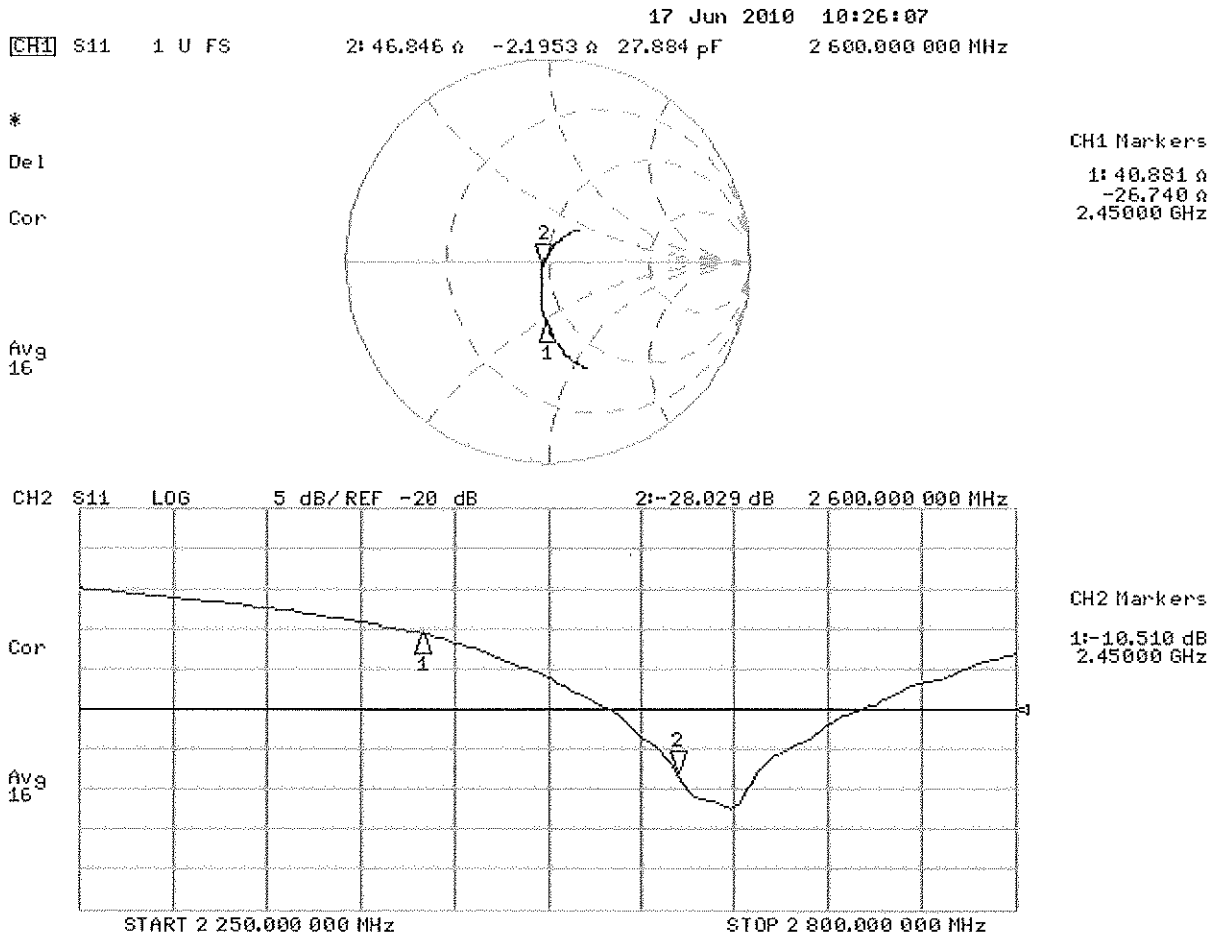
## Impedance Measurement Plot for Body TSL