FCC Part 96.47 Test Report

Applicant	:	**Motorola Mobility LLC**
Equipment	:	**Mobile Cellular Phone**
Brand Name	:	**Motorola**
Model Name	:	**XT2201-4**
FCC ID	:	**IHDT56AB3**
Standard	:	**FCC Part 96.47**
Test Date(s)	:	**Dec. 30, 2021**

We, Sporton International (Kunshan) Inc., would like to declare that the tested sample has been evaluated in accordance with the test procedures and has been in compliance with the applicable technical standards.
The test results in this report apply exclusively to the tested model / sample. Without written approval of Sporton International (Kunshan) Inc., the test report shall not be reproduced except in full.

Jason Jia

Reviewed by: Jason Jia / Supervisor

Alexwang

Approved by: Alex Wang / Manager

ACCREDITED
Cert #5145.02

Sporton International (Kunshan) Inc.
No. 1098, Pengxi North Road, Kunshan Economic Development Zone Jiangsu Province 215300 People's Republic of China

Table of Contents

1 GENERAL DESCRIPTION 5

1.1 APPLICANT 5
1.2 MANUFACTURER 5
1.3 PRODUCT FEATURE OF EQUIPMENT UNDER TEST 5
1.4 PRODUCT SPECIFICATION OF EQUIPMENT UNDER TEST 5
1.5 SPECIFICATION OF ACCESSORY 6
1.6 TESTING LOCATION 6
1.7 TEST SOFTWARE 7
1.8 APPLICABLE STANDARDS 7

2 TEST CONFIGURATION OF EQUIPMENT UNDER TEST 8

2.1 CONNECTION DIAGRAM OF TEST SYSTEM 8

3 END USER DEVICE ADDITIONAL REQUIREMENT 9

3.1 TEST REQUIREMENT 9
3.2 TEST PROCEDURE 9
3.3 TEST RESULT 10

4 LIST OF MEASURING EQUIPMENT 12

APPENDIX A. TEST SETUP PHOTO

History of this test report

Report No.	Version	Description	Issued Date
FG192317-02D	01	Initial issue of report	Jan. 05, 2022

Declaration of Conformity:
The test results with all measurement uncertainty excluded are presented in accordance with the regulation limits or requirements declared by manufacturers.
Comments and Explanations:
The declared of product specification for EUT presented in the report are provided by the manufacturer, and the manufacturer takes all the responsibilities for the accuracy of product specification.

Summary of Test Result

Report Clause	Ref Std. Clause	Test Items	Result (PASS/FAIL)	Remark
3	96.47	End User Device additional requirement	Pass	-

Comments and Explanations:
The declared of product specification for EUT presented in the report are provided by the manufacturer, and the manufacturer takes all the responsibilities for the accuracy of product specification.

1 General Description

1.1 Applicant

Motorola Mobility LLC
222 W,Merchandise Mart Plaza, Chicago IL 60654 USA

1.2 Manufacturer

Motorola Mobility LLC
222 W,Merchandise Mart Plaza, Chicago IL 60654 USA

1.3 Product Feature of Equipment Under Test

Product Feature	
Equipment	Mobile Cellular Phone
Brand Name	Motorola
Model Name	XT2201-4
FCC ID	IHDT56AB3
IMEI Code	357193870007566
HW Version	DVT2
SW Version	S1SH32.10
EUT Stage	Identical Prototype

Remark: The above EUT's information was declared by manufacturer. Please refer to the specifications or user's manual for more detailed description.

1.4 Product Specification of Equipment Under Test

Standards-related Product Specification	
Tx Frequency	LTE Band 48 : 3550 MHz ~ 3700 MHz
Rx Frequency	LTE Band 48 : 3550 MHz ~ 3700 MHz
Antenna Type	PIFA Antenna
Type of Modulation	QPSK / 16QAM / 64QAM / 256QAM

1.5 Specification of Accessory

Specification of Accessory				
AC Adapter 1(US)	**Brand Name**	Motorola(Salom)	**Model Name**	MC-301
AC Adapter 2(US)	**Brand Name**	Motorola(Acbel)	**Model Name**	MC-301
Battery	**Brand Name**	Motorola(ATL)	**Model Name**	NA50
Earphone	**Brand Name**	Motorola (Lyand)	**Model Name**	MD211(SH38D20195)
USB Cable 1	**Brand Name**	Motorola(Saibao)	**Model Name**	SC18D13215
USB Cable 2	**Brand Name**	Motorola(Cabletech)	**Model Name**	SC18D13216
USB Cable 3	**Brand Name**	Motorola(Luxshare)	**Model Name**	SC18D13217
Type C to HDMI Cable /USBC Cable	**Brand Name**	Motorola(Linxee)	**Model Name**	SC18D02146
Stylus	**Brand Name**	Motorola smart stylus	**Model Name**	XT2201-S
Smart Folio	**Brand Name**	Motorola(Techson)	**Model Name**	SS68D36907,SS68D36906
Wireless Dongle	**Brand Name**	Motorola	**Model Name**	MD-02
HDMI Cable	**Brand Name**	Motorola	**Model Name**	HC-01
USB Cable(Type A/C)	**Brand Name**	Motorola	**Model Name**	SC18C24367

1.6 Testing Location

Sporton International (Kunshan) Inc. is accredited to ISO/IEC 17025:2017 by American Association for Laboratory Accreditation with Certificate Number 5145.02

Test Firm	Sporton International (Kunshan) Inc.		
Test Site Location	No. 1098, Pengxi North Road, Kunshan Economic Development Zone Jiangsu Province 215300 People's Republic of China TEL : +86-512-57900158 FAX : +86-512-57900958		
Test Site No.	**Sporton Site No.**	**FCC Designation No.**	**FCC Test Firm Registration No.**
	DFS01-KS	CN1257	314309
Test Engineer	Eloise Wang		
Temperature	20 ~ 25 ℃		
Relative Humidity	40 ~ 55 %		

1.7 Test Software

Item	Site	Manufactor	Name	Version
1.	DFS01-KS	Sporton	DFS & Adaptivity Test Tools	1.0

1.8 Applicable Standards

- FCC Part 96.47
- FCC KDB 940660 D01 Part 96 CBRS Eqpt v03
- WINNF-TS-0122-V1.0.1 CBRS CBSD Test Specification

Remark: All test items were verified and recorded according to the standards and without any deviation during the test.

2 Test Configuration of Equipment Under Test

2.1 Connection Diagram of Test System

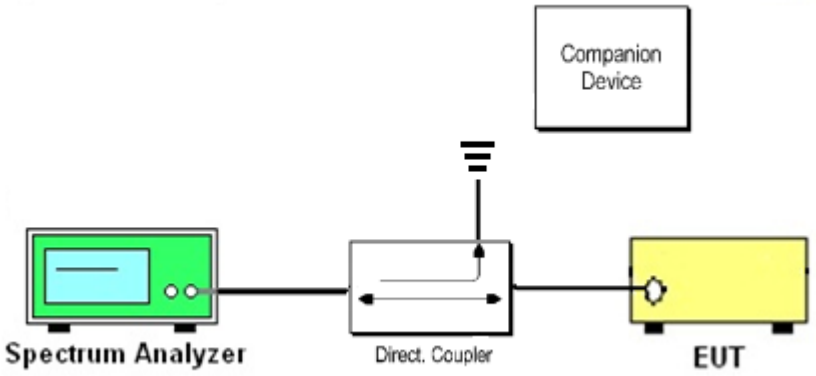

The companion device is certified CBRS (FCC ID: S9GQ710US00)

3 End User Device additional requirement

3.1 Test Requirement

FCC Part 96.47

(a) End User Devices may operate only if they can positively receive and decode an authorization signal transmitted by a CBSD, including the frequencies and power limits for their operation.

(1) An End User Device must discontinue operations, change frequencies, or change its operational power level within 10 seconds of receiving instructions from its associated CBSD.

3.2 Test Procedure

Following procedure can be done by applying WINNF-TS-0122-V1.0.1 CBRS CBSD Test Specification, use the certified Ruckus CBSD (FCC ID: S9GQ710US02) as companion device to show compliance with Part 96.47 requirement for End User Device (EUD):

1. Setup with frequency 3600-3620MHz and power level 17dBm/MHz
2. Enable AP service from Ruckus Cloud management
3. Check EUD Tx Frequency and power
4. Disable AP service from Ruckus Cloud management
    a. Check EUD stops transmission within 10seconds.

5. Setup with 3670-3690MHz & power level 7dBm/MHz
6. Enable AP service from Ruckus Cloud management
7. Check EUD Tx Frequency and power
8. Disable AP service from Ruckus Cloud management
    a. Check EUD stops transmission within 10seconds.

3.3 Test Result

[Step 1] Setup with frequency 3600-3620MHz and power level 17dBm/MHz
[Step 3] Check EUD Tx Frequency and power

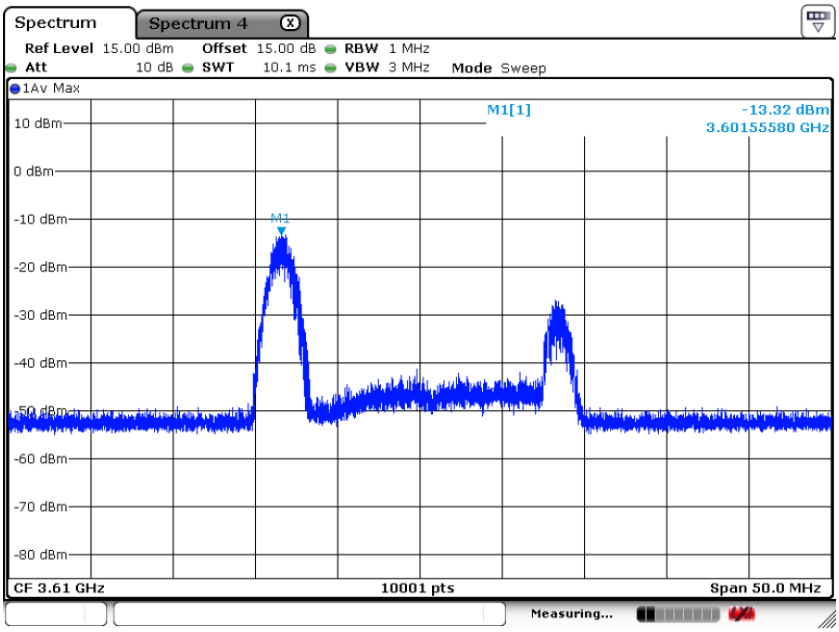

[Step 4.a.] EUD stops transmission within 10 seconds of receiving instructions from its associated CBSD.

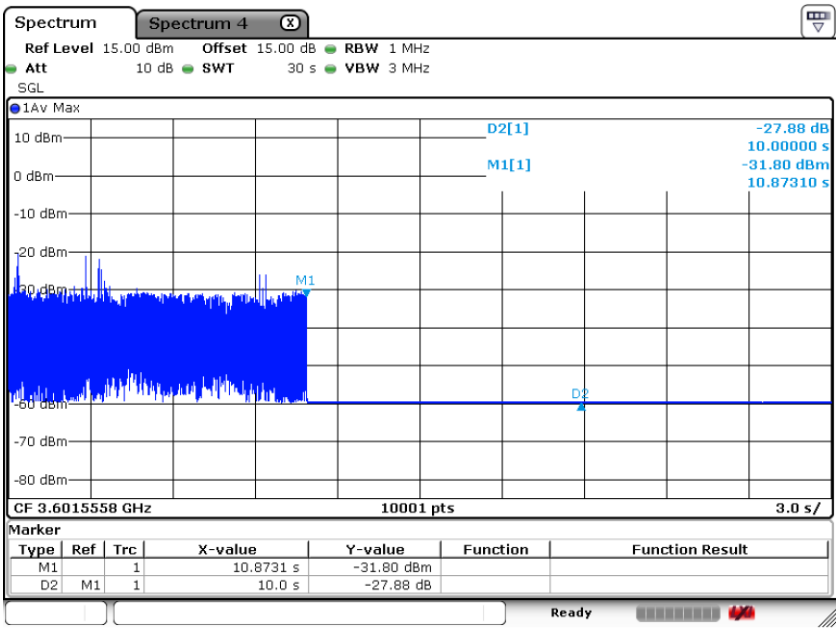

[Step 5] Setup with 3670-3690MHz & power level 7dBm/MHz

[Step 7] Check EUD Tx Frequency and power

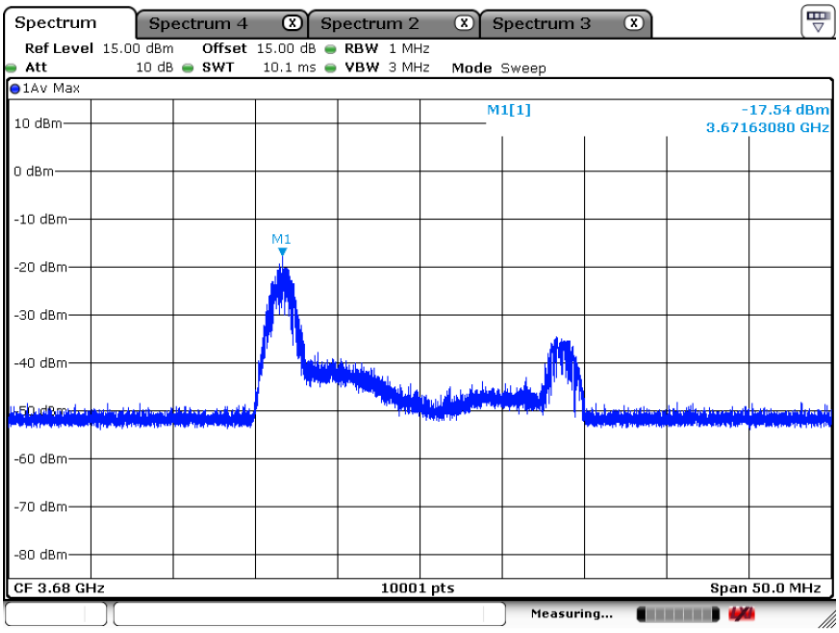

[Step 8.a.] After changing the frequency and power level,

The module (EUT) discontinues operations, change frequencies, or change its operational power level within 10 seconds of receiving instructions from its associated CBSD. Test result is PASS.

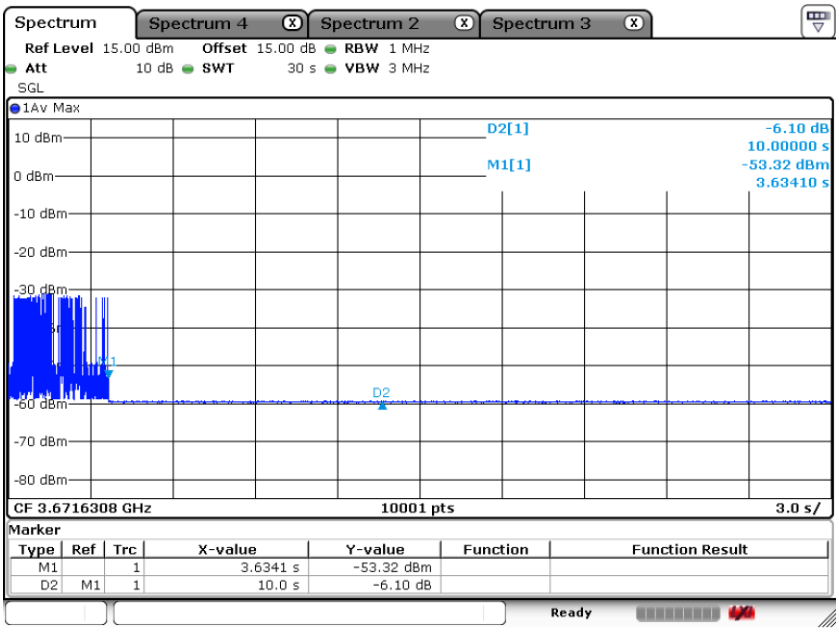

4 List of Measuring Equipment

Instrument	Manufacturer	Model No.	Serial No.	Characteristics	Calibration Date	Test Date	Due Date	Remark
Signal Analyzer	R&S	FSV7	101472	10Hz~7GHz	Jan. 07, 2021	Dec. 30, 2021	Jan. 06, 2022	Conducted (DFS01-KS)

---------- THE END ----------