Test Laboratory: Sporton International Inc. SAR/HAC Testing Lab Date: 2022/12/27

System Check_Head_2600MHz

DUT: D2600V2 - SN:1061

Communication System: UID 0, CW (0); Frequency: 2600 MHz;Duty Cycle: 1:1
Medium: HSL_2600 Medium parameters used: f = 2600 MHz; σ = 1.981 S/m; ε_r = 39.059; ρ = 1000 kg/m^3
Ambient Temperature：23.2 ℃; Liquid Temperature：22.7 ℃

DASY5 Configuration:
- Probe: EX3DV4 - SN7630; ConvF(7.82, 7.82, 7.82); Calibrated: 2022/3/4
- Sensor-Surface: 1.4mm (Mechanical Surface Detection)
- Electronics: DAE4 Sn1305; Calibrated: 2022/4/27
- Phantom: Twin-SAM 1; Type: SAM Twin; Serial: 2024
- Measurement SW: DASY52, Version 52.10 (4); SEMCAD X Version 14.6.14 (7501)

Pin=50mW/Area Scan (71x71x1): Interpolated grid: dx=1.200 mm, dy=1.200 mm
Maximum value of SAR (interpolated) = 4.14 W/kg

Pin=50mW/Zoom Scan (7x7x7)/Cube 0: Measurement grid: dx=5mm, dy=5mm, dz=5mm
Reference Value = 48.21 V/m; Power Drift = -0.02 dB
Peak SAR (extrapolated) = 5.26 W/kg
SAR(1 g) = 2.69 W/kg; SAR(10 g) = 1.22 W/kg
Maximum value of SAR (measured) = 4.24 W/kg

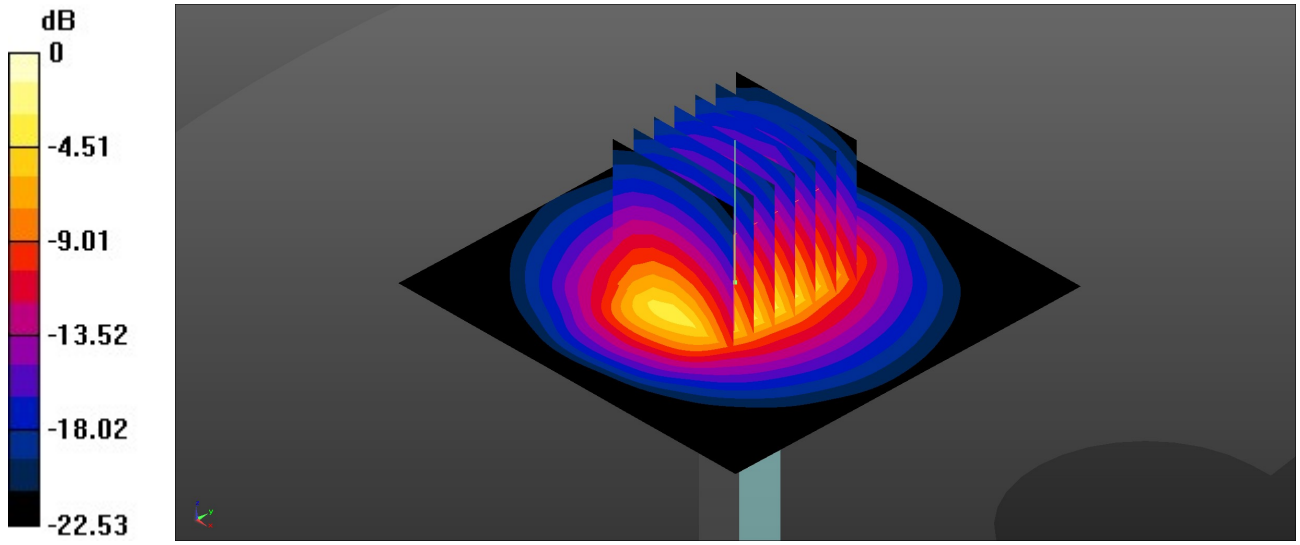

0 dB = 4.24 W/kg = 6.27 dBW/kg

Test Laboratory: Sporton International Inc. SAR/HAC Testing Lab Date: 2022/12/28

System Check_Head_5250MHz

DUT: D5GHzV2 - SN:1113

Communication System: UID 0, CW (0); Frequency: 5250 MHz;Duty Cycle: 1:1
Medium: HSL_5000 Medium parameters used: f = 5250 MHz; σ = 4.675 S/m; ε_r = 36.678; ρ = 1000 kg/m^3
Ambient Temperature：23.2 ℃; Liquid Temperature：22.9 ℃

DASY5 Configuration:
- Probe: EX3DV4 - SN7630; ConvF(5.7, 5.7, 5.7); Calibrated: 2022/3/4
- Sensor-Surface: 1.4mm (Mechanical Surface Detection)
- Electronics: DAE4 Sn1305; Calibrated: 2022/4/27
- Phantom: Twin-SAM 1; Type: SAM Twin; Serial: 2024
- Measurement SW: DASY52, Version 52.10 (4); SEMCAD X Version 14.6.14 (7501)

Pin=50mW/Area Scan (91x91x1): Interpolated grid: dx=1.000 mm, dy=1.000 mm
Maximum value of SAR (interpolated) = 8.72 W/kg

Pin=50mW/Zoom Scan (8x8x7)/Cube 0: Measurement grid: dx=4mm, dy=4mm, dz=1.4mm
Reference Value = 40.76 V/m; Power Drift = 0.03 dB
Peak SAR (extrapolated) = 14.9 W/kg
SAR(1 g) = 3.94 W/kg; SAR(10 g) = 1.15 W/kg
Maximum value of SAR (measured) = 9.47 W/kg

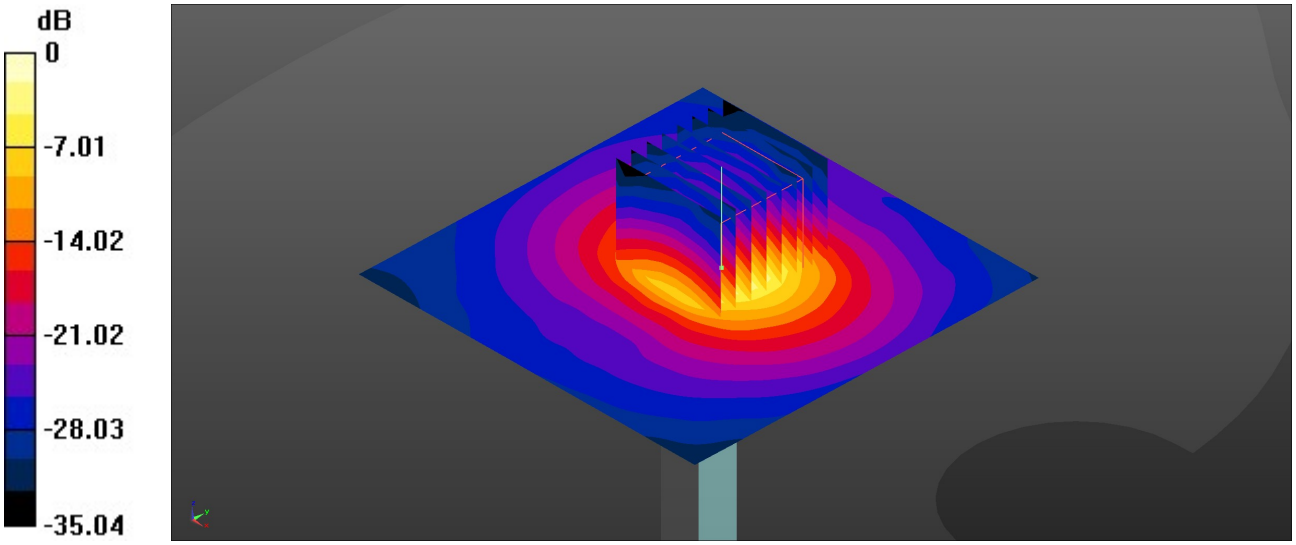

0 dB = 9.47 W/kg = 9.76 dBW/kg

Test Laboratory: Sporton International Inc. SAR/HAC Testing Lab Date: 2022/12/29

System Check_Head_5600MHz

DUT: D5GHzV2 - SN:1113

Communication System: UID 0, CW (0); Frequency: 5600 MHz;Duty Cycle: 1:1
Medium: HSL_5000 Medium parameters used: f = 5600 MHz; σ = 5.084 S/m; ε_r = 36.034; ρ = 1000 kg/m^3
Ambient Temperature：23.3 ℃; Liquid Temperature：22.6 ℃

DASY5 Configuration:
- Probe: EX3DV4 - SN7630; ConvF(4.95, 4.95, 4.95); Calibrated: 2022/3/4
- Sensor-Surface: 1.4mm (Mechanical Surface Detection)
- Electronics: DAE4 Sn1305; Calibrated: 2022/4/27
- Phantom: Twin-SAM 1; Type: SAM Twin; Serial: 2024
- Measurement SW: DASY52, Version 52.10 (4); SEMCAD X Version 14.6.14 (7501)

Pin=50mW/Area Scan (91x91x1): Interpolated grid: dx=1.000 mm, dy=1.000 mm
Maximum value of SAR (interpolated) = 10.1 W/kg

Pin=50mW/Zoom Scan (8x8x7)/Cube 0: Measurement grid: dx=4mm, dy=4mm, dz=1.4mm
Reference Value = 43.31 V/m; Power Drift = 0.04 dB
Peak SAR (extrapolated) = 18.4 W/kg
SAR(1 g) = 4.37 W/kg; SAR(10 g) = 1.25 W/kg
Maximum value of SAR (measured) = 10.9 W/kg

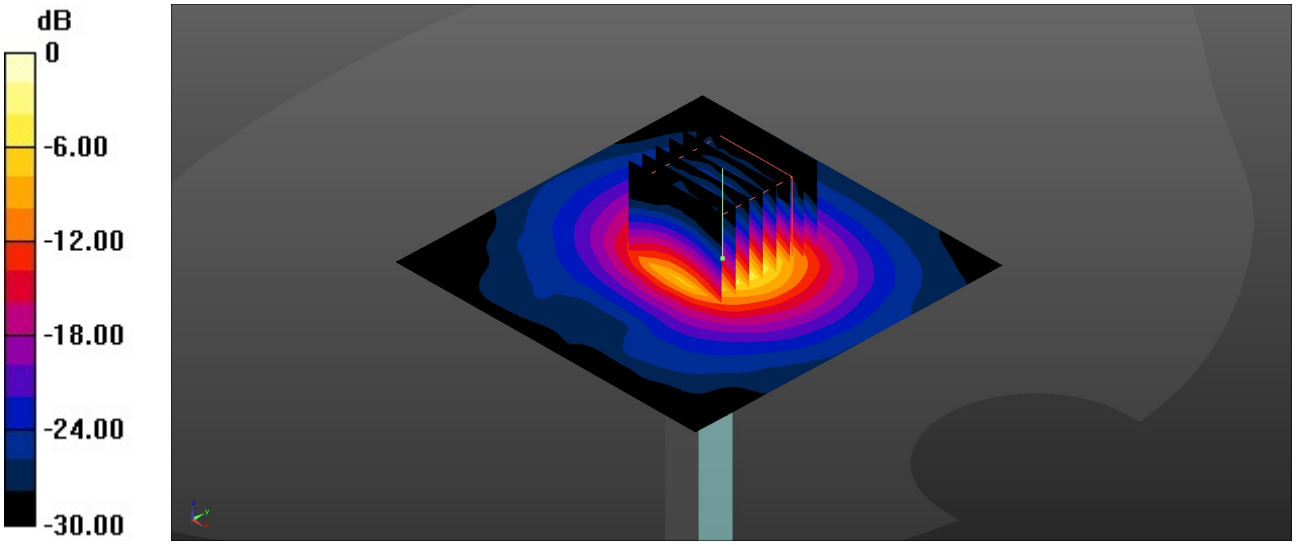

0 dB = 10.9 W/kg = 10.37 dBW/kg

Test Laboratory: Sporton International Inc. SAR/HAC Testing Lab Date: 2022/12/30

System Check_Head_5750MHz

DUT: D5GHzV2 - SN:1113

Communication System: UID 0, CW (0); Frequency: 5750 MHz;Duty Cycle: 1:1
Medium: HSL_5000 Medium parameters used: f = 5750 MHz; σ = 5.255 S/m; ε_r = 35.788; ρ = 1000 kg/m^3
Ambient Temperature：23.1 ℃; Liquid Temperature：22.8 ℃

DASY5 Configuration:
- Probe: EX3DV4 - SN7630; ConvF(5.15, 5.15, 5.15); Calibrated: 2022/3/4
- Sensor-Surface: 1.4mm (Mechanical Surface Detection)
- Electronics: DAE4 Sn1305; Calibrated: 2022/4/27
- Phantom: Twin-SAM 1; Type: SAM Twin; Serial: 2024
- Measurement SW: DASY52, Version 52.10 (4); SEMCAD X Version 14.6.14 (7501)

Pin=50mW/Area Scan (91x91x1): Interpolated grid: dx=1.000 mm, dy=1.000 mm
Maximum value of SAR (interpolated) = 8.79 W/kg

Pin=50mW/Zoom Scan (8x8x7)/Cube 0: Measurement grid: dx=4mm, dy=4mm, dz=1.4mm
Reference Value = 40.59 V/m; Power Drift = 0.04 dB
Peak SAR (extrapolated) = 16.7 W/kg
SAR(1 g) = 3.82 W/kg; SAR(10 g) = 1.1 W/kg
Maximum value of SAR (measured) = 9.68 W/kg

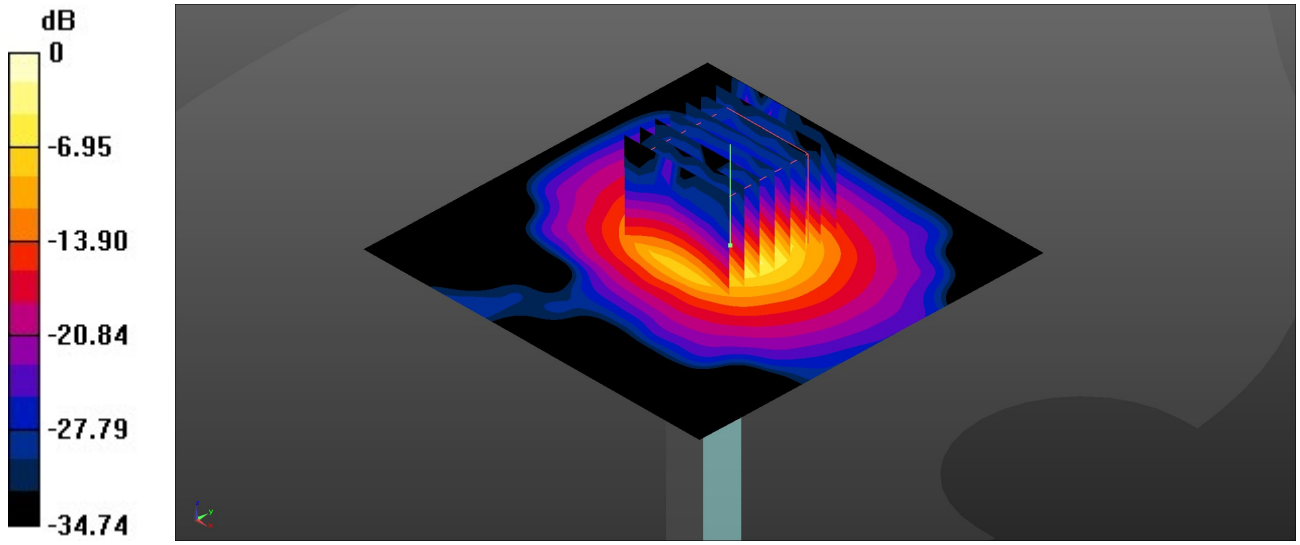

0 dB = 9.68 W/kg = 9.86 dBW/kg

Test Laboratory: Sporton International Inc. SAR/HAC Testing Lab Date: 2022/12/31

System Check_Head_750MHz

DUT: D750V3 - SN:1087

Communication System: UID 0, CW (0); Frequency: 750 MHz;Duty Cycle: 1:1
Medium: HSL_750 Medium parameters used: f = 750 MHz; σ = 0.924 S/m; ε_r = 42.065; ρ = 1000 kg/m^3

Ambient Temperature：23.2 ℃; Liquid Temperature：22.6 ℃

DASY5 Configuration:
- Probe: EX3DV4 - SN7630; ConvF(10.35, 10.35, 10.35); Calibrated: 2022/3/4
- Sensor-Surface: 1.4mm (Mechanical Surface Detection)
- Electronics: DAE4 Sn1305; Calibrated: 2022/4/27
- Phantom: Twin-SAM 1; Type: SAM Twin; Serial: 2024
- Measurement SW: DASY52, Version 52.10 (4); SEMCAD X Version 14.6.14 (7501)

Pin=50mW/Area Scan (61x61x1): Interpolated grid: dx=1.500 mm, dy=1.500 mm
Maximum value of SAR (interpolated) = 0.585 W/kg

Pin=50mW/Zoom Scan (5x5x7)/Cube 0: Measurement grid: dx=8mm, dy=8mm, dz=5mm
Reference Value = 26.53 V/m; Power Drift = -0.05 dB
Peak SAR (extrapolated) = 0.644 W/kg
SAR(1 g) = 0.451 W/kg; SAR(10 g) = 0.297 W/kg
Maximum value of SAR (measured) = 0.583 W/kg

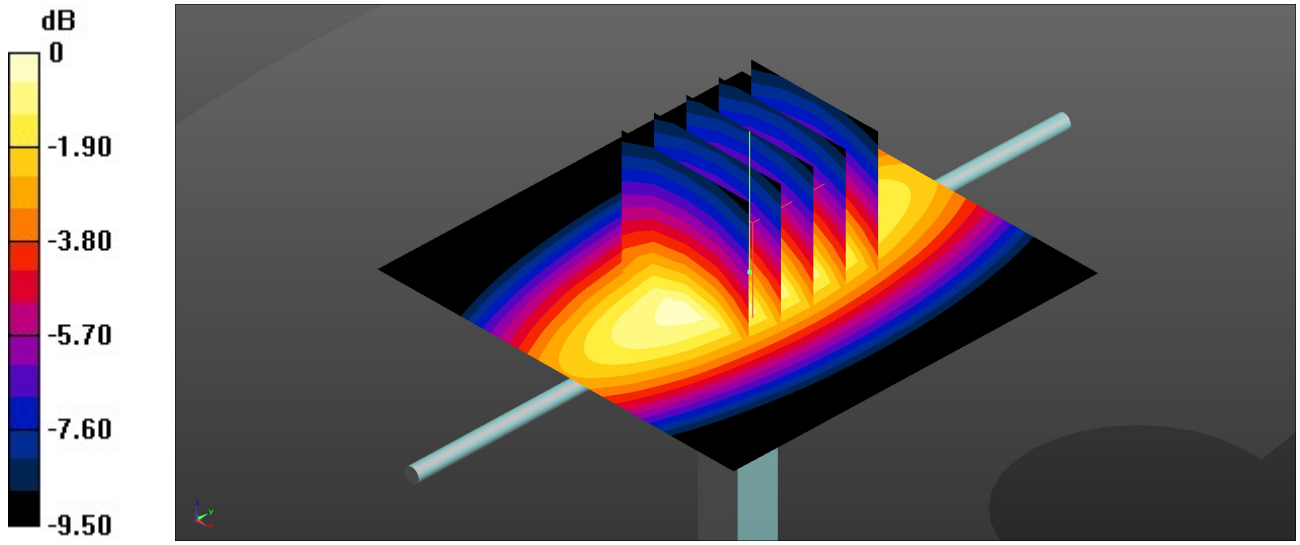

0 dB = 0.583 W/kg = -2.34 dBW/kg

Test Laboratory: Sporton International Inc. SAR/HAC Testing Lab Date: 2023/1/1

System Check_Head_835MHz

DUT: D835V2 - SN:4d091

Communication System: UID 0, CW (0); Frequency: 835 MHz;Duty Cycle: 1:1
Medium: HSL_835 Medium parameters used: f = 835 MHz; σ = 0.926 S/m; ε_r = 41.058; ρ = 1000 kg/m^3

Ambient Temperature：23.2 ℃; Liquid Temperature：22.9 ℃

DASY5 Configuration:
- Probe: EX3DV4 - SN7630; ConvF(10.05, 10.05, 10.05); Calibrated: 2022/3/4
- Sensor-Surface: 1.4mm (Mechanical Surface Detection)
- Electronics: DAE4 Sn1305; Calibrated: 2022/4/27
- Phantom: Twin-SAM 1; Type: SAM Twin; Serial: 2024
- Measurement SW: DASY52, Version 52.10 (4); SEMCAD X Version 14.6.14 (7501)

Pin=50mW/Area Scan (61x61x1): Interpolated grid: dx=1.500 mm, dy=1.500 mm
Maximum value of SAR (interpolated) = 0.692 W/kg

Pin=50mW/Zoom Scan (5x5x7)/Cube 0: Measurement grid: dx=8mm, dy=8mm, dz=5mm
Reference Value = 28.26 V/m; Power Drift = 0.04 dB
Peak SAR (extrapolated) = 0.784 W/kg
SAR(1 g) = 0.498 W/kg; SAR(10 g) = 0.307 W/kg
Maximum value of SAR (measured) = 0.696 W/kg

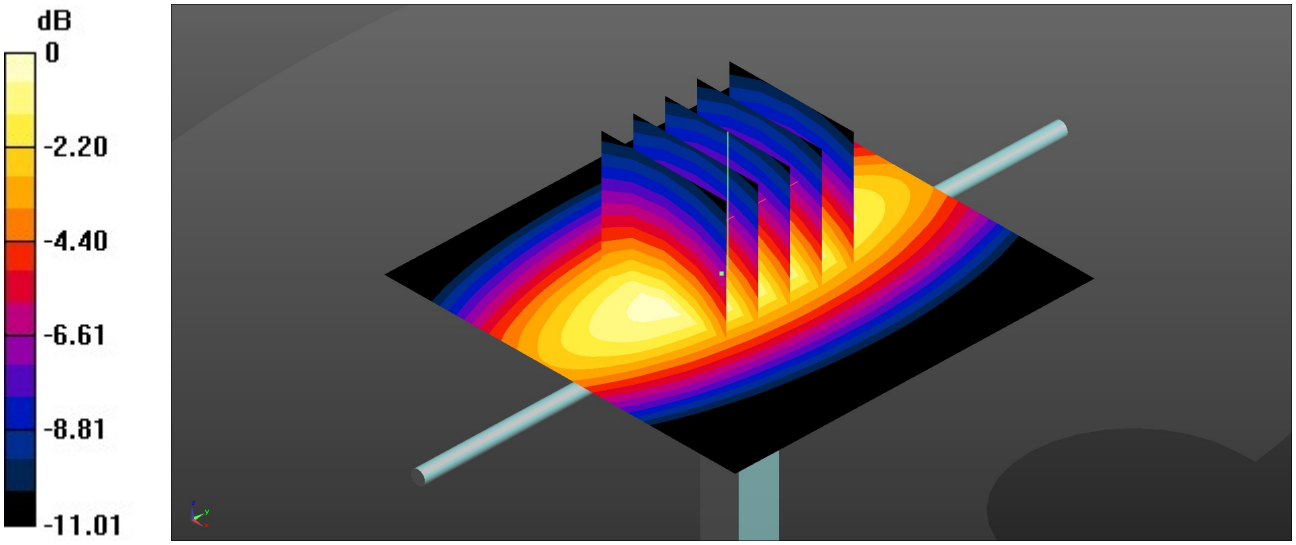

0 dB = 0.696 W/kg = -1.57 dBW/kg

Test Laboratory: Sporton International Inc. SAR/HAC Testing Lab Date: 2023/1/2

System Check_Head_1750MHz

DUT: D1750V2 - SN:1090

Communication System: UID 0, CW (0); Frequency: 1750 MHz;Duty Cycle: 1:1
Medium: HSL_1750 Medium parameters used: f = 1750 MHz; σ = 1.351 S/m; ε_r = 40.38; ρ = 1000 kg/m^3
Ambient Temperature：23.3 ℃; Liquid Temperature：22.8 ℃

DASY5 Configuration:
- Probe: EX3DV4 - SN7630; ConvF(8.97, 8.97, 8.97); Calibrated: 2022/3/4
- Sensor-Surface: 1.4mm (Mechanical Surface Detection)
- Electronics: DAE4 Sn1305; Calibrated: 2022/4/27
- Phantom: Twin-SAM 1; Type: SAM Twin; Serial: 2024
- Measurement SW: DASY52, Version 52.10 (4); SEMCAD X Version 14.6.14 (7501)

Pin=50mW/Area Scan (61x61x1): Interpolated grid: dx=1.500 mm, dy=1.500 mm
Maximum value of SAR (interpolated) = 2.97 W/kg

Pin=50mW/Zoom Scan (5x5x7)/Cube 0: Measurement grid: dx=8mm, dy=8mm, dz=5mm
Reference Value = 47.19 V/m; Power Drift = -0.11 dB
Peak SAR (extrapolated) = 3.43 W/kg
SAR(1 g) = 1.92 W/kg; SAR(10 g) = 1.05 W/kg
Maximum value of SAR (measured) = 2.88 W/kg

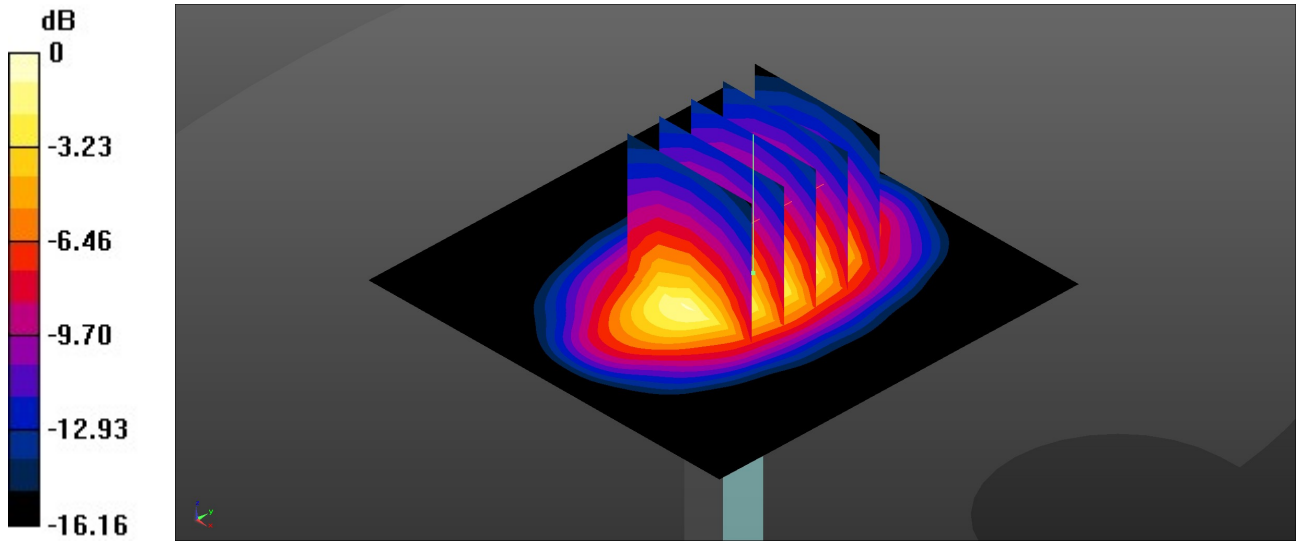

0 dB = 2.88 W/kg = 4.59 dBW/kg

Test Laboratory: Sporton International Inc. SAR/HAC Testing Lab Date: 2023/1/3

System Check_Head_1900MHz

DUT: D1900V2 - SN:5d182

Communication System: UID 0, CW (0); Frequency: 1900 MHz;Duty Cycle: 1:1
Medium: HSL_1900 Medium parameters used: f = 1900 MHz; σ = 1.459 S/m; ε_r = 40.035; ρ = 1000 kg/m^3
Ambient Temperature：23.4 ℃; Liquid Temperature：22.7 ℃

DASY5 Configuration:
- Probe: EX3DV4 - SN7630; ConvF(8.51, 8.51, 8.51); Calibrated: 2022/3/4
- Sensor-Surface: 1.4mm (Mechanical Surface Detection)
- Electronics: DAE4 Sn1305; Calibrated: 2022/4/27
- Phantom: Twin-SAM 1; Type: SAM Twin; Serial: 2024
- Measurement SW: DASY52, Version 52.10 (4); SEMCAD X Version 14.6.14 (7501)

Pin=50mW/Area Scan (61x61x1): Interpolated grid: dx=1.500 mm, dy=1.500 mm
Maximum value of SAR (interpolated) = 3.19 W/kg

Pin=50mW/Zoom Scan (5x5x7)/Cube 0: Measurement grid: dx=8mm, dy=8mm, dz=5mm
Reference Value = 47.86 V/m; Power Drift = -0.04 dB
Peak SAR (extrapolated) = 3.84 W/kg
SAR(1 g) = 2.02 W/kg; SAR(10 g) = 1.05 W/kg
Maximum value of SAR (measured) = 3.19 W/kg

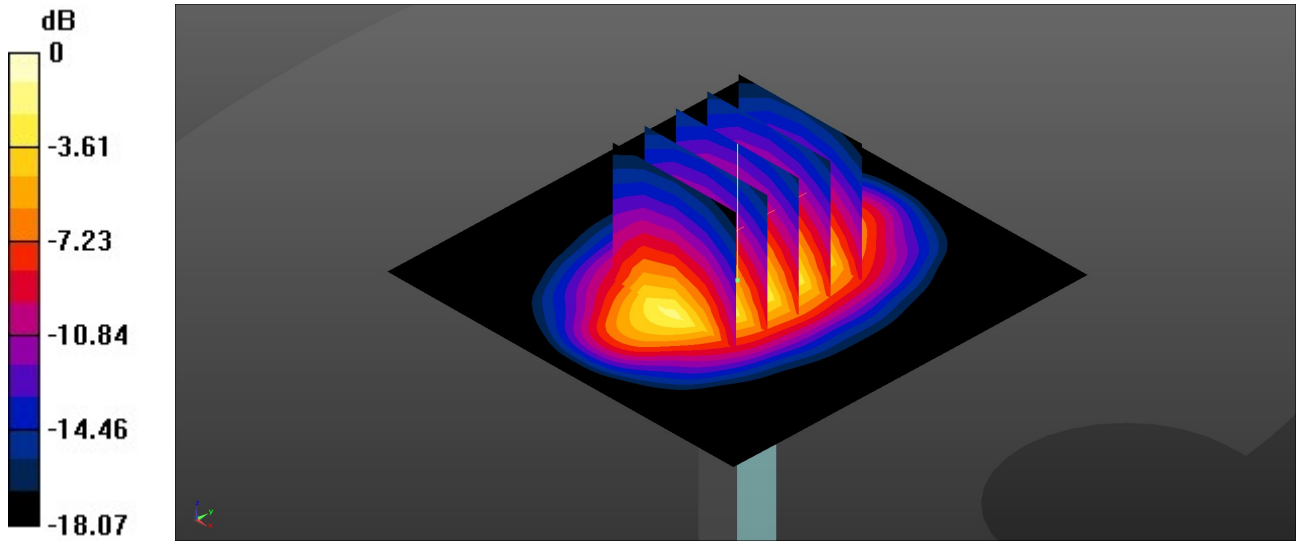

0 dB = 3.19 W/kg = 5.04 dBW/kg

Test Laboratory: Sporton International Inc. SAR/HAC Testing Lab Date: 2023/1/4

System Check_Head_2300MHz

DUT: D2300V2 - SN:1055

Communication System: UID 0, CW (0); Frequency: 2300 MHz;Duty Cycle: 1:1
Medium: HSL_2300 Medium parameters used: f = 2300 MHz; σ = 1.737 S/m; ε_r = 39.328; ρ = 1000 kg/m^3
Ambient Temperature：23.2 ℃; Liquid Temperature：22.9 ℃

DASY5 Configuration:
- Probe: EX3DV4 - SN7630; ConvF(8.37, 8.37, 8.37); Calibrated: 2022/3/4
- Sensor-Surface: 1.4mm (Mechanical Surface Detection)
- Electronics: DAE4 Sn1305; Calibrated: 2022/4/27
- Phantom: Twin-SAM 1; Type: SAM Twin; Serial: 2024
- Measurement SW: DASY52, Version 52.10 (4); SEMCAD X Version 14.6.14 (7501)

Pin=50mW/Area Scan (71x71x1): Interpolated grid: dx=1.200 mm, dy=1.200 mm
Maximum value of SAR (interpolated) = 3.62 W/kg

Pin=50mW/Zoom Scan (7x7x7)/Cube 0: Measurement grid: dx=5mm, dy=5mm, dz=5mm
Reference Value = 46.91 V/m; Power Drift = 0.07 dB
Peak SAR (extrapolated) = 4.45 W/kg
SAR(1 g) = 2.27 W/kg; SAR(10 g) = 1.11 W/kg
Maximum value of SAR (measured) = 3.67 W/kg

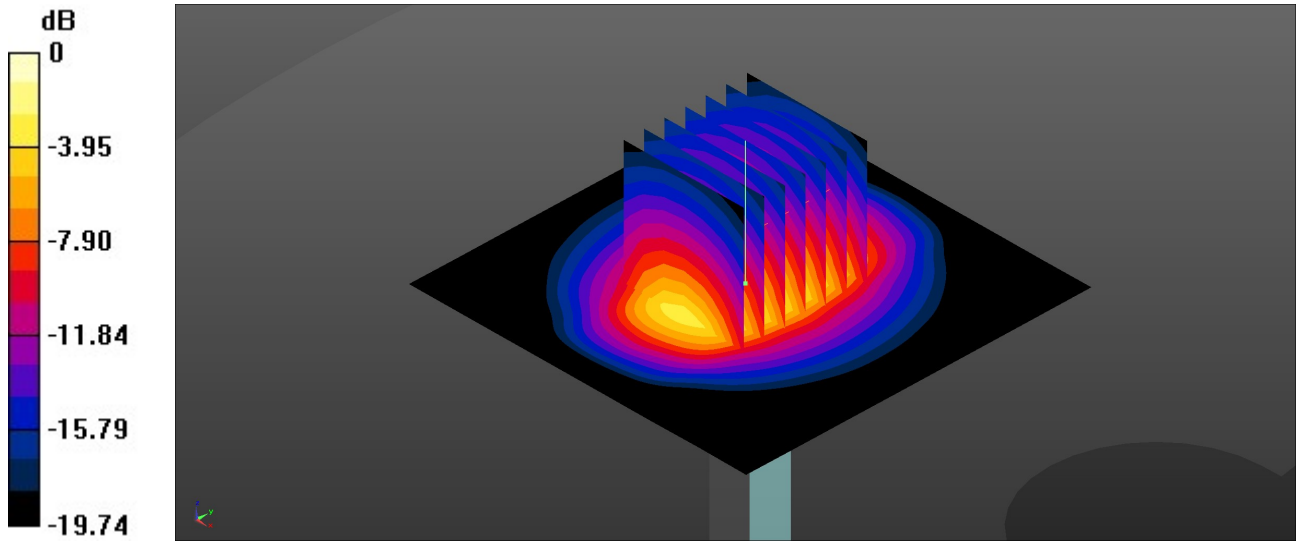

0 dB = 3.67 W/kg = 5.65 dBW/kg

Test Laboratory: Sporton International Inc. SAR/HAC Testing Lab Date: 2023/1/5

System Check_Head_2450MHz

DUT: D2450V2 - SN:1040

Communication System: UID 0, CW (0); Frequency: 2450 MHz;Duty Cycle: 1:1
Medium: HSL_2450 Medium parameters used: f = 2450 MHz; σ = 1.856 S/m; ε_r = 39.103; ρ = 1000 kg/m^3
Ambient Temperature：23.2 ℃; Liquid Temperature：22.8 ℃

DASY5 Configuration:
- Probe: EX3DV4 - SN7630; ConvF(8.13, 8.13, 8.13); Calibrated: 2022/3/4
- Sensor-Surface: 1.4mm (Mechanical Surface Detection)
- Electronics: DAE4 Sn1305; Calibrated: 2022/4/27
- Phantom: Twin-SAM 1; Type: SAM Twin; Serial: 2024
- Measurement SW: DASY52, Version 52.10 (4); SEMCAD X Version 14.6.14 (7501)

Pin=50mW/Area Scan (71x71x1): Interpolated grid: dx=1.200 mm, dy=1.200 mm
Maximum value of SAR (interpolated) = 4.19 W/kg

Pin=50mW/Zoom Scan (7x7x7)/Cube 0: Measurement grid: dx=5mm, dy=5mm, dz=5mm
Reference Value = 41.66 V/m; Power Drift = 0.03 dB
Peak SAR (extrapolated) = 5.34 W/kg
SAR(1 g) = 2.52 W/kg; SAR(10 g) = 1.17 W/kg
Maximum value of SAR (measured) = 4.26 W/kg

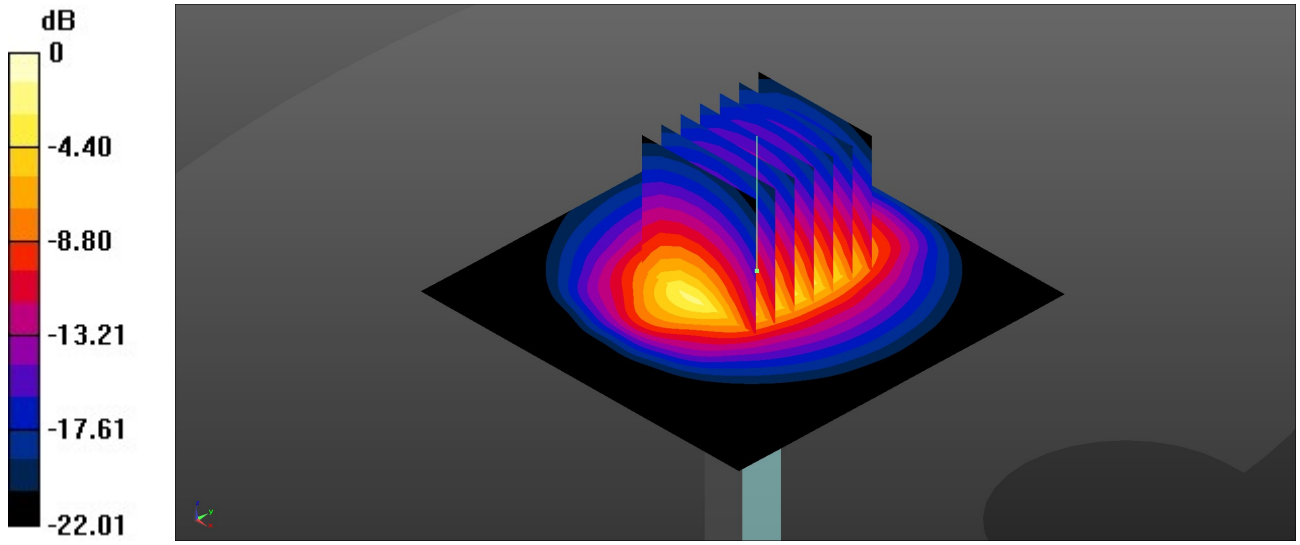

0 dB = 4.26 W/kg = 6.29 dBW/kg

Test Laboratory: Sporton International Inc. SAR/HAC Testing Lab Date: 2023/1/6

System Check_Head_2600MHz

DUT: D2600V2 - SN:1061

Communication System: UID 0, CW (0); Frequency: 2600 MHz;Duty Cycle: 1:1
Medium: HSL_2600 Medium parameters used: f = 2600 MHz; σ = 1.927 S/m; ε_r = 38.332; ρ = 1000 kg/m^3
Ambient Temperature：23.4 ℃; Liquid Temperature：22.6 ℃

DASY5 Configuration:
- Probe: EX3DV4 - SN7630; ConvF(7.82, 7.82, 7.82); Calibrated: 2022/3/4
- Sensor-Surface: 1.4mm (Mechanical Surface Detection)
- Electronics: DAE4 Sn1305; Calibrated: 2022/4/27
- Phantom: Twin-SAM 1; Type: SAM Twin; Serial: 2024
- Measurement SW: DASY52, Version 52.10 (4); SEMCAD X Version 14.6.14 (7501)

Pin=50mW/Area Scan (71x71x1): Interpolated grid: dx=1.200 mm, dy=1.200 mm
Maximum value of SAR (interpolated) = 4.17 W/kg

Pin=50mW/Zoom Scan (7x7x7)/Cube 0: Measurement grid: dx=5mm, dy=5mm, dz=5mm
Reference Value = 47.35 V/m; Power Drift = -0.01 dB
Peak SAR (extrapolated) = 5.12 W/kg
SAR(1 g) = 2.7 W/kg; SAR(10 g) = 1.25 W/kg
Maximum value of SAR (measured) = 4.18 W/kg

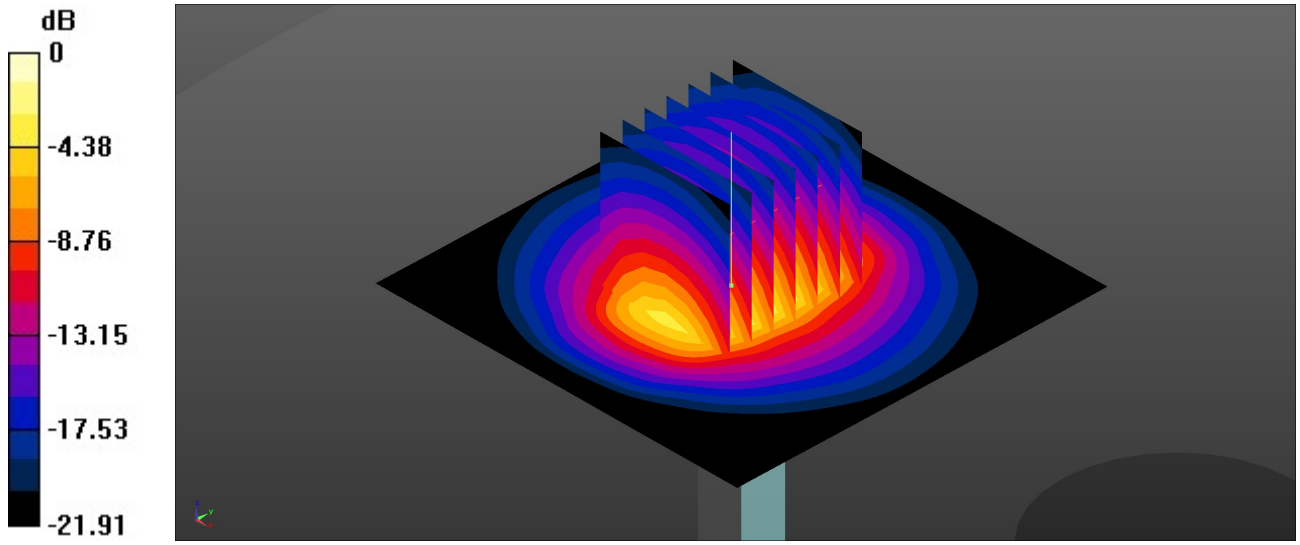

0 dB = 4.18 W/kg = 6.21 dBW/kg

Test Laboratory: Sporton International Inc. SAR/HAC Testing Lab Date: 2023/1/7

System Check_Head_5250MHz

DUT: D5GHzV2 - SN:1113

Communication System: UID 0, CW (0); Frequency: 5250 MHz;Duty Cycle: 1:1
Medium: HSL_5000 Medium parameters used: f = 5250 MHz; σ = 4.672 S/m; ε_r = 36.649; ρ = 1000 kg/m^3
Ambient Temperature：23.2 ℃; Liquid Temperature：22.9 ℃

DASY5 Configuration:
- Probe: EX3DV4 - SN7630; ConvF(5.7, 5.7, 5.7); Calibrated: 2022/3/4
- Sensor-Surface: 1.4mm (Mechanical Surface Detection)
- Electronics: DAE4 Sn1305; Calibrated: 2022/4/27
- Phantom: Twin-SAM 1; Type: SAM Twin; Serial: 2024
- Measurement SW: DASY52, Version 52.10 (4); SEMCAD X Version 14.6.14 (7501)

Pin=50mW/Area Scan (91x91x1): Interpolated grid: dx=1.000 mm, dy=1.000 mm
Maximum value of SAR (interpolated) = 8.28 W/kg

Pin=50mW/Zoom Scan (7x7x7)/Cube 0: Measurement grid: dx=4mm, dy=4mm, dz=1.4mm
Reference Value = 45.52 V/m; Power Drift = 0.06 dB
Peak SAR (extrapolated) = 14.2 W/kg
SAR(1 g) = 3.99 W/kg; SAR(10 g) = 1.13 W/kg
Maximum value of SAR (measured) = 8.92 W/kg

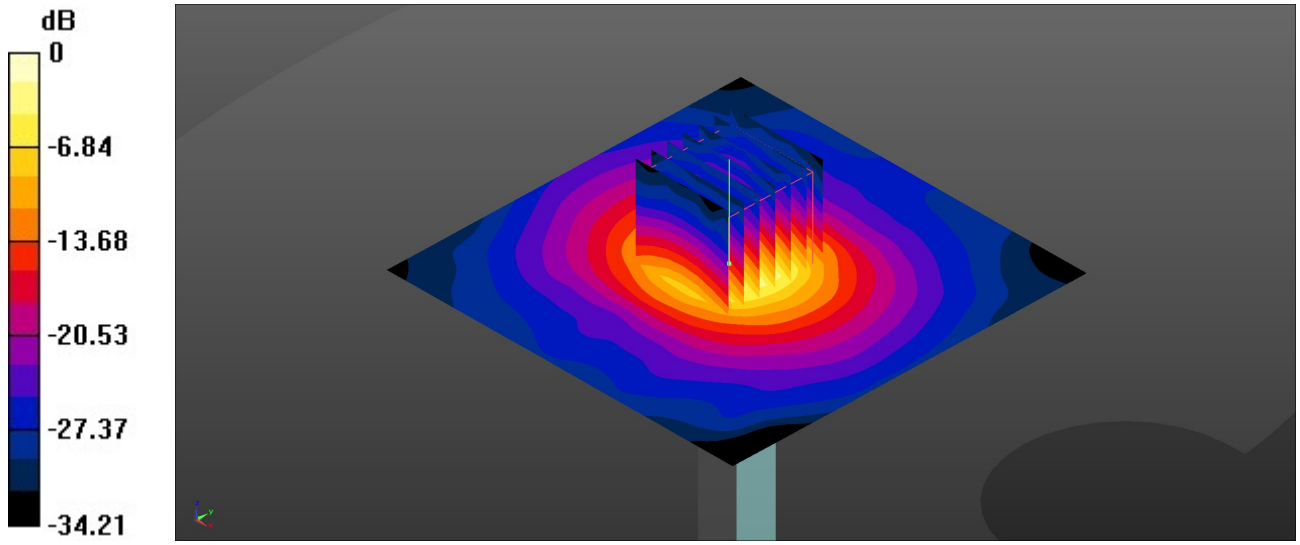

0 dB = 8.92 W/kg = 9.50 dBW/kg

Test Laboratory: Sporton International Inc. SAR/HAC Testing Lab Date: 2023/1/8

System Check_Head_5600MHz

DUT: D5GHzV2 - SN:1113

Communication System: UID 0, CW (0); Frequency: 5600 MHz;Duty Cycle: 1:1
Medium: HSL_5000 Medium parameters used: f = 5600 MHz; σ = 5.078 S/m; ε_r = 36.004; ρ = 1000 kg/m^3
Ambient Temperature：23.4 ℃; Liquid Temperature：22.8 ℃

DASY5 Configuration:
- Probe: EX3DV4 - SN7630; ConvF(4.95, 4.95, 4.95); Calibrated: 2022/3/4
- Sensor-Surface: 1.4mm (Mechanical Surface Detection)
- Electronics: DAE4 Sn1305; Calibrated: 2022/4/27
- Phantom: Twin-SAM 1; Type: SAM Twin; Serial: 2024
- Measurement SW: DASY52, Version 52.10 (4); SEMCAD X Version 14.6.14 (7501)

Pin=50mW/Area Scan (91x91x1): Interpolated grid: dx=1.000 mm, dy=1.000 mm
Maximum value of SAR (interpolated) = 9.05 W/kg

Pin=50mW/Zoom Scan (8x8x7)/Cube 0: Measurement grid: dx=4mm, dy=4mm, dz=1.4mm
Reference Value = 40.90 V/m; Power Drift = 0.07 dB
Peak SAR (extrapolated) = 16.3 W/kg
SAR(1 g) = 3.98 W/kg; SAR(10 g) = 1.15 W/kg
Maximum value of SAR (measured) = 9.97 W/kg

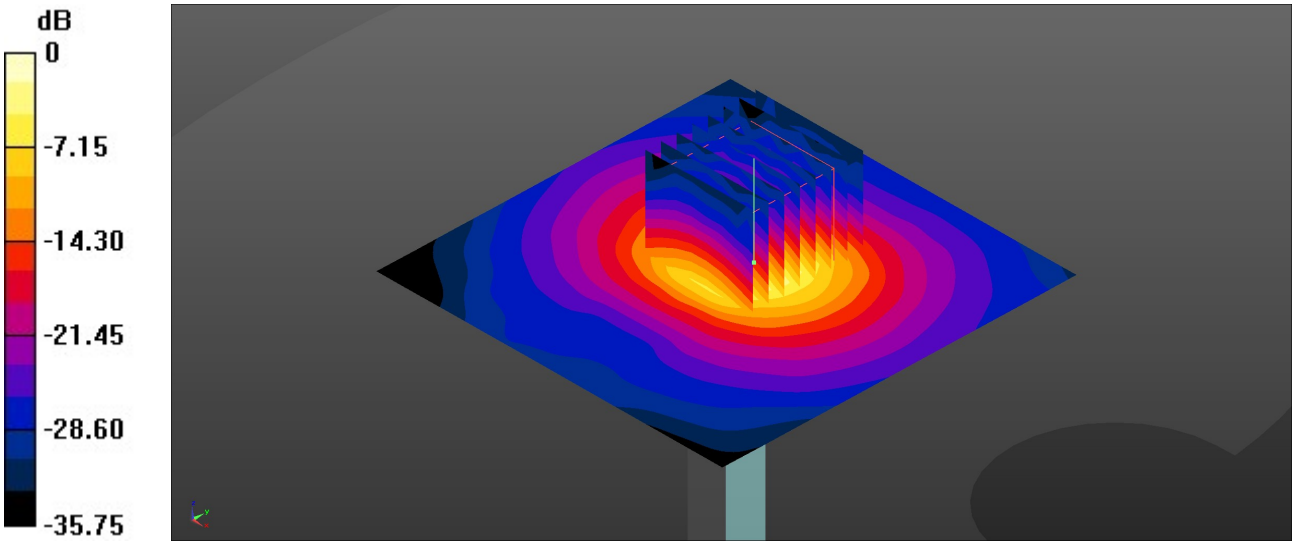

0 dB = 9.97 W/kg = 9.99 dBW/kg

Test Laboratory: Sporton International Inc. SAR/HAC Testing Lab Date: 2023/1/9

System Check_Head_5750MHz

DUT: D5GHzV2 - SN:1113

Communication System: UID 0, CW (0); Frequency: 5750 MHz;Duty Cycle: 1:1
Medium: HSL_5000 Medium parameters used: f = 5750 MHz; σ = 5.25 S/m; ε_r = 35.755; ρ = 1000 kg/m^3
Ambient Temperature：23.1 ℃; Liquid Temperature：22.7 ℃

DASY5 Configuration:
- Probe: EX3DV4 - SN7630; ConvF(5.15, 5.15, 5.15); Calibrated: 2022/3/4
- Sensor-Surface: 1.4mm (Mechanical Surface Detection)
- Electronics: DAE4 Sn1305; Calibrated: 2022/4/27
- Phantom: Twin-SAM 1; Type: SAM Twin; Serial: 2024
- Measurement SW: DASY52, Version 52.10 (4); SEMCAD X Version 14.6.14 (7501)

Pin=50mW/Area Scan (91x91x1): Interpolated grid: dx=1.000 mm, dy=1.000 mm
Maximum value of SAR (interpolated) = 7.67 W/kg

Pin=50mW/Zoom Scan (8x8x7)/Cube 0: Measurement grid: dx=4mm, dy=4mm, dz=1.4mm
Reference Value = 39.40 V/m; Power Drift = 0.03 dB
Peak SAR (extrapolated) = 15.3 W/kg
SAR(1 g) = 3.85 W/kg; SAR(10 g) = 1.11 W/kg
Maximum value of SAR (measured) = 8.49 W/kg

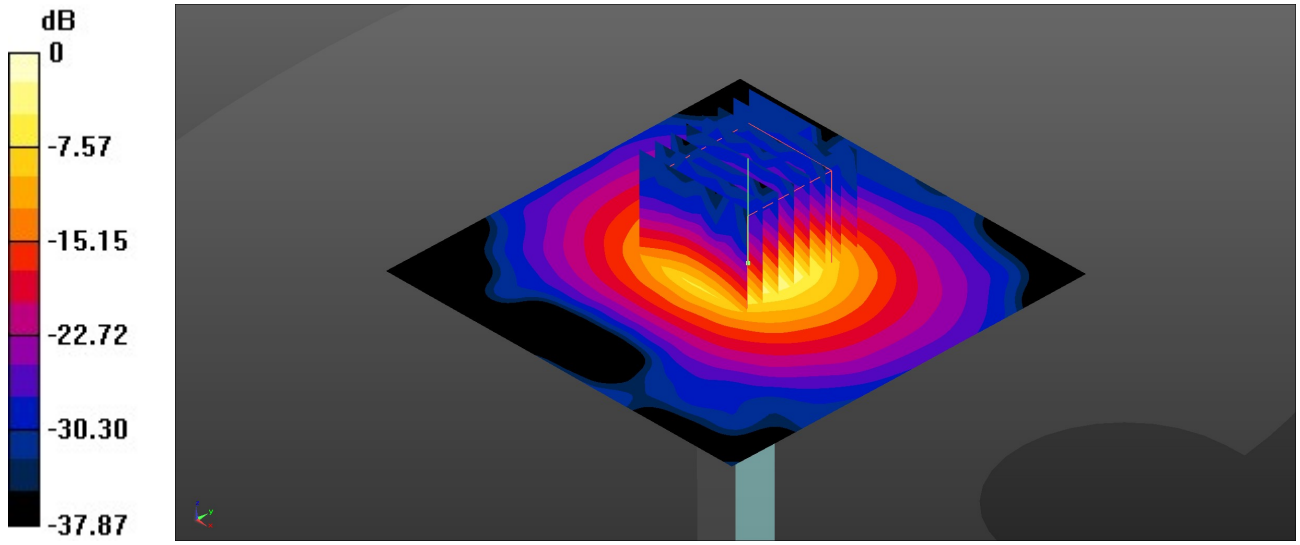

0 dB = 8.49 W/kg = 9.29 dBW/kg

Appendix B. Plots of High SAR Measurement

The plots are shown as follows.

Test Laboratory: Sporton International Inc. SAR/HAC Testing Lab Date: 2022/12/21

01_LTE Band 71_20M_QPSK_1RB_0Offset_Right Cheek_0mm_Ch133322

Communication System: UID 0, LTE-FDD (0); Frequency: 683 MHz;Duty Cycle: 1:1
Medium: HSL_750 Medium parameters used: f = 683 MHz; σ = 0.85 S/m; ε_r = 42.654; ρ = 1000 kg/m^3
Ambient Temperature：23.2 ℃; Liquid Temperature：22.9 ℃

DASY5 Configuration:
- Probe: EX3DV4 - SN7630; ConvF(10.35, 10.35, 10.35); Calibrated: 2022/3/4
- Sensor-Surface: 1.4mm (Mechanical Surface Detection)
- Electronics: DAE4 Sn1305; Calibrated: 2022/4/27
- Phantom: Twin-SAM 1; Type: SAM Twin; Serial: 2024
- Measurement SW: DASY52, Version 52.10 (4); SEMCAD X Version 14.6.14 (7501)

Area Scan (81x81x1): Interpolated grid: dx=1.500 mm, dy=1.500 mm
Maximum value of SAR (interpolated) = 0.784 W/kg

Zoom Scan (6x6x7)/Cube 0: Measurement grid: dx=8mm, dy=8mm, dz=5mm
Reference Value = 23.90 V/m; Power Drift = 0.08 dB
Peak SAR (extrapolated) = 0.882 W/kg
SAR(1 g) = 0.409 W/kg; SAR(10 g) = 0.248 W/kg
Maximum value of SAR (measured) = 0.687 W/kg

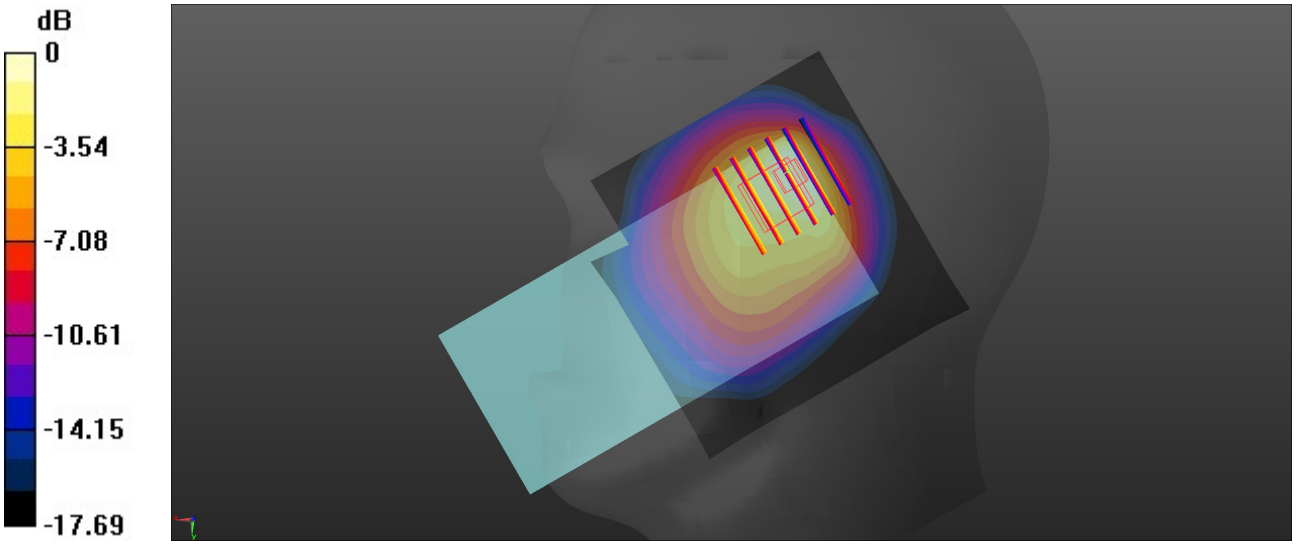

0 dB = 0.687 W/kg = -1.63 dBW/kg

Test Laboratory: Sporton International Inc. SAR/HAC Testing Lab Date: 2022/12/21

02_LTE Band 12_10M_QPSK_1RB_0Offset_Right Cheek_0mm_Ch23095

Communication System: UID 0, LTE-FDD (0); Frequency: 707.5 MHz;Duty Cycle: 1:1
Medium: HSL_750 Medium parameters used: f = 707.5 MHz; σ = 0.852 S/m; ε_r = 42.279; ρ = 1000 kg/m^3
Ambient Temperature：23.2 ℃; Liquid Temperature：22.9 ℃

DASY5 Configuration:
- Probe: EX3DV4 - SN7630; ConvF(10.35, 10.35, 10.35); Calibrated: 2022/3/4
- Sensor-Surface: 1.4mm (Mechanical Surface Detection)
- Electronics: DAE4 Sn1305; Calibrated: 2022/4/27
- Phantom: Twin-SAM 1; Type: SAM Twin; Serial: 2024
- Measurement SW: DASY52, Version 52.10 (4); SEMCAD X Version 14.6.14 (7501)

Area Scan (81x81x1): Interpolated grid: dx=1.500 mm, dy=1.500 mm
Maximum value of SAR (interpolated) = 1.33 W/kg

Zoom Scan (6x6x7)/Cube 0: Measurement grid: dx=8mm, dy=8mm, dz=5mm
Reference Value = 9.103 V/m; Power Drift = -0.16 dB
Peak SAR (extrapolated) = 1.36 W/kg
SAR(1 g) = 0.642 W/kg; SAR(10 g) = 0.395 W/kg
Maximum value of SAR (measured) = 1.05 W/kg

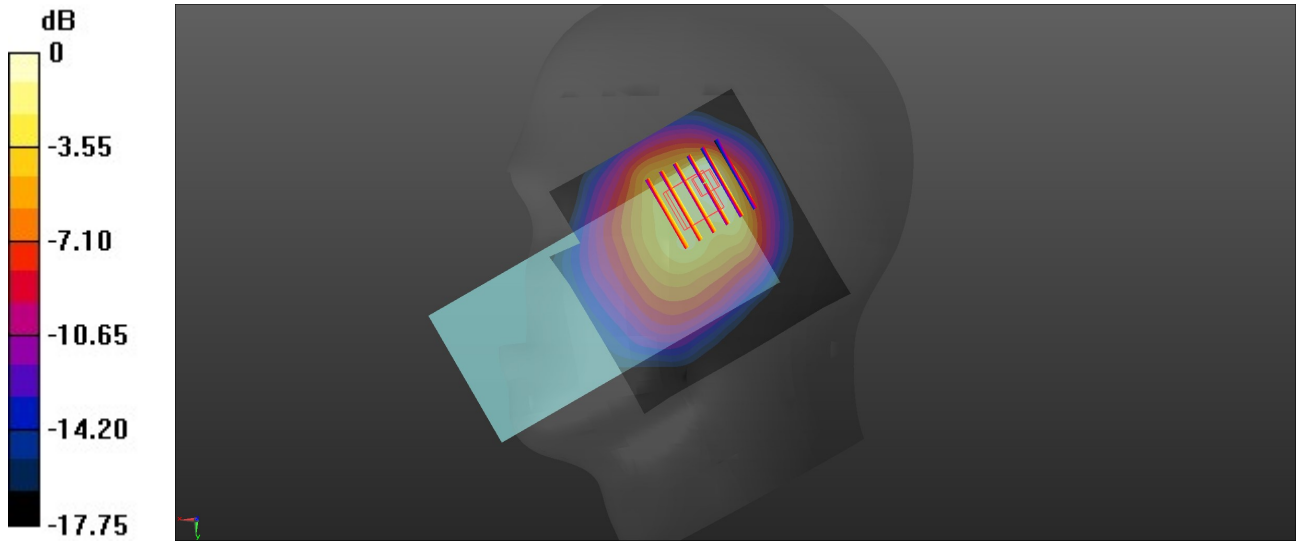

0 dB = 1.05 W/kg = 0.21 dBW/kg

Test Laboratory: Sporton International Inc. SAR/HAC Testing Lab Date: 2022/12/21

03_LTE Band 13_10M_QPSK_1RB_0Offset_Right Cheek_0mm_Ch23230

Communication System: UID 0, LTE-FDD (0); Frequency: 782 MHz;Duty Cycle: 1:1
Medium: HSL_750 Medium parameters used: f = 782 MHz; σ = 0.923 S/m; ε_r = 41.305; ρ = 1000 kg/m^3

Ambient Temperature：23.2 ℃; Liquid Temperature：22.9 ℃

DASY5 Configuration:
- Probe: EX3DV4 - SN7630; ConvF(10.35, 10.35, 10.35); Calibrated: 2022/3/4
- Sensor-Surface: 1.4mm (Mechanical Surface Detection)
- Electronics: DAE4 Sn1305; Calibrated: 2022/4/27
- Phantom: Twin-SAM 1; Type: SAM Twin; Serial: 2024
- Measurement SW: DASY52, Version 52.10 (4); SEMCAD X Version 14.6.14 (7501)

Area Scan (81x81x1): Interpolated grid: dx=1.500 mm, dy=1.500 mm
Maximum value of SAR (interpolated) = 1.25 W/kg

Zoom Scan (6x6x7)/Cube 0: Measurement grid: dx=8mm, dy=8mm, dz=5mm
Reference Value = 30.22 V/m; Power Drift = 0.01 dB
Peak SAR (extrapolated) = 1.32 W/kg
SAR(1 g) = 0.644 W/kg; SAR(10 g) = 0.405 W/kg
Maximum value of SAR (measured) = 1.04 W/kg

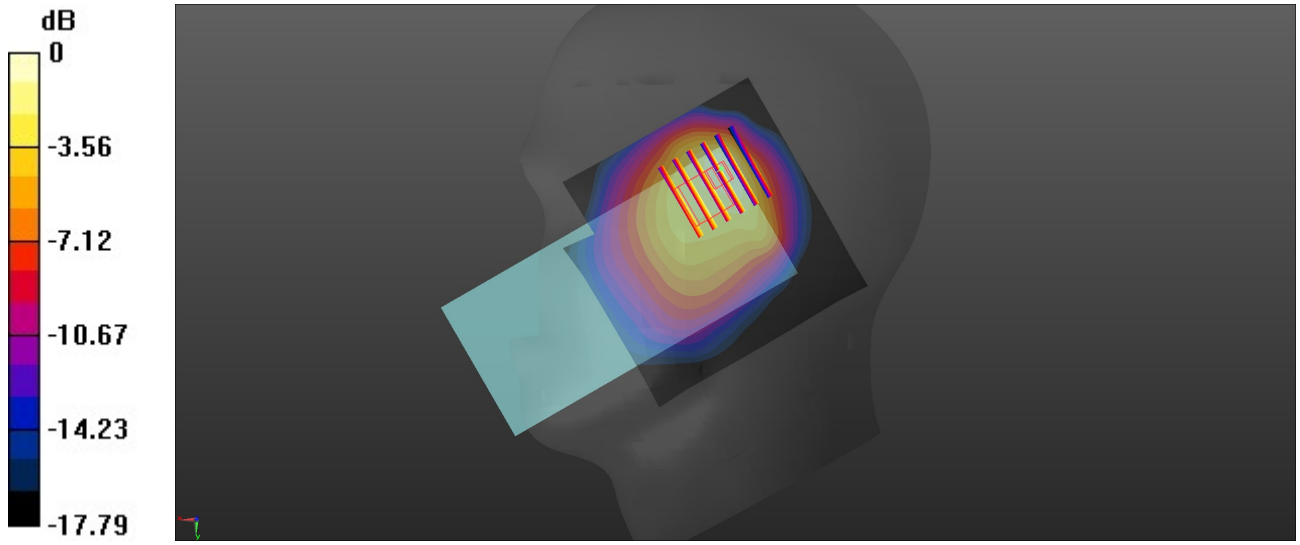

0 dB = 1.04 W/kg = 0.17 dBW/kg

Test Laboratory: Sporton International Inc. SAR/HAC Testing Lab Date: 2022/12/21

04_LTE Band 14_10M_QPSK_1RB_0Offset_Right Cheek_0mm_Ch23330

Communication System: UID 0, LTE-FDD (0); Frequency: 793 MHz;Duty Cycle: 1:1
Medium: HSL_750 Medium parameters used: f = 793 MHz; σ = 0.934 S/m; ε_r = 41.15; ρ = 1000 kg/m^3
Ambient Temperature：23.2 ℃; Liquid Temperature：22.9 ℃

DASY5 Configuration:
- Probe: EX3DV4 - SN7630; ConvF(10.35, 10.35, 10.35); Calibrated: 2022/3/4
- Sensor-Surface: 1.4mm (Mechanical Surface Detection)
- Electronics: DAE4 Sn1305; Calibrated: 2022/4/27
- Phantom: Twin-SAM 1; Type: SAM Twin; Serial: 2024
- Measurement SW: DASY52, Version 52.10 (4); SEMCAD X Version 14.6.14 (7501)

Area Scan (81x81x1): Interpolated grid: dx=1.500 mm, dy=1.500 mm
Maximum value of SAR (interpolated) = 1.32 W/kg

Zoom Scan (6x7x7)/Cube 0: Measurement grid: dx=8mm, dy=8mm, dz=5mm
Reference Value = 30.68 V/m; Power Drift = 0.09 dB
Peak SAR (extrapolated) = 1.35 W/kg
SAR(1 g) = 0.673 W/kg; SAR(10 g) = 0.423 W/kg
Maximum value of SAR (measured) = 1.09 W/kg

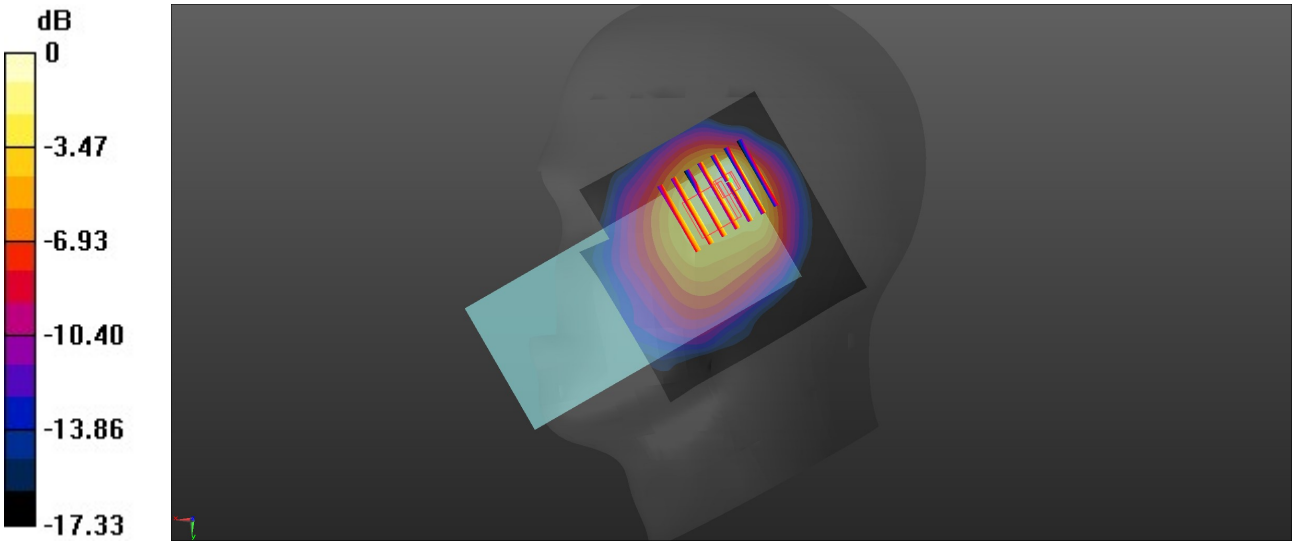

0 dB = 1.09 W/kg = 0.37 dBW/kg

Test Laboratory: Sporton International Inc. SAR/HAC Testing Lab Date: 2022/12/22

05_GSM850_GPRS (4 Tx slots)_Right Cheek_0mm_Ch189

Communication System: UID 0, GSM850 (0); Frequency: 836.4 MHz;Duty Cycle: 1:2.08
Medium: HSL_835 Medium parameters used: f = 836.4 MHz; σ = 0.93 S/m; ε_r = 40.902; ρ = 1000 kg/m^3
Ambient Temperature：23.4 ℃; Liquid Temperature：22.8 ℃

DASY5 Configuration:
- Probe: EX3DV4 - SN7630; ConvF(10.05, 10.05, 10.05); Calibrated: 2022/3/4
- Sensor-Surface: 1.4mm (Mechanical Surface Detection)
- Electronics: DAE4 Sn1305; Calibrated: 2022/4/27
- Phantom: Twin-SAM 1; Type: SAM Twin; Serial: 2024
- Measurement SW: DASY52, Version 52.10 (4); SEMCAD X Version 14.6.14 (7501)

Area Scan (81x81x1): Interpolated grid: dx=1.500 mm, dy=1.500 mm
Maximum value of SAR (interpolated) = 1.47 W/kg

Zoom Scan (6x6x7)/Cube 0: Measurement grid: dx=8mm, dy=8mm, dz=5mm
Reference Value = 32.77 V/m; Power Drift = -0.05 dB
Peak SAR (extrapolated) = 1.48 W/kg
SAR(1 g) = 0.743 W/kg; SAR(10 g) = 0.462 W/kg
Maximum value of SAR (measured) = 1.17 W/kg

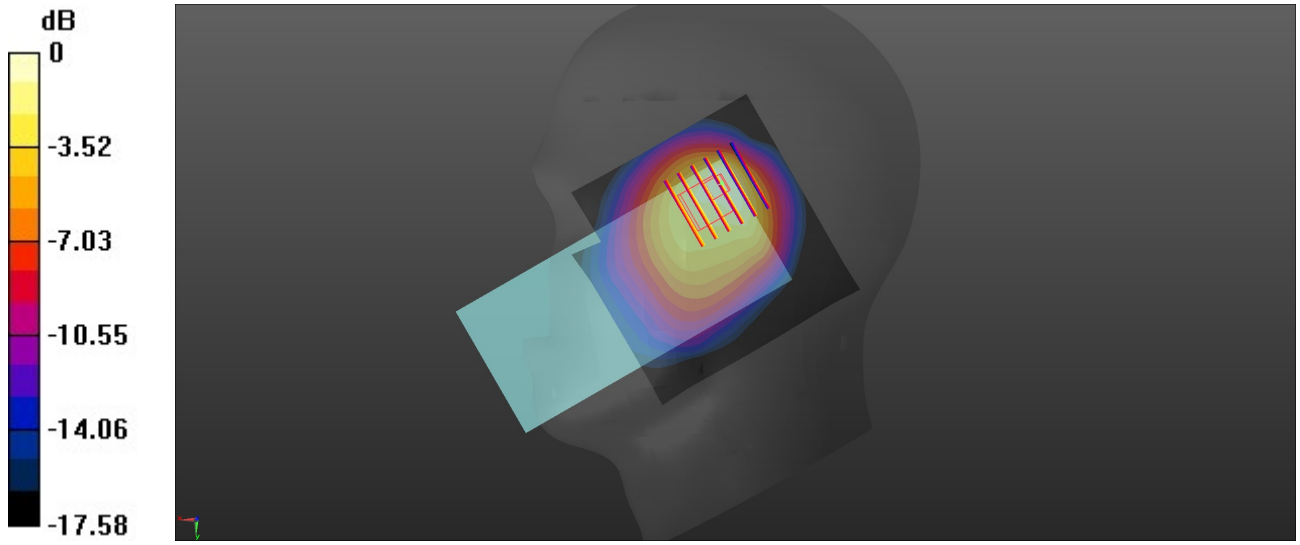

0 dB = 1.17 W/kg = 0.68 dBW/kg

Test Laboratory: Sporton International Inc. SAR/HAC Testing Lab Date: 2022/12/22

06_WCDMA V_RMC 12.2Kbps_Right Cheek_0mm_Ch4182

Communication System: UID 0, WCDMA (0); Frequency: 836.4 MHz;Duty Cycle: 1:1
Medium: HSL_835 Medium parameters used: f = 836.4 MHz; σ = 0.93 S/m; ε_r = 40.902; ρ = 1000 kg/m^3
Ambient Temperature：23.4 ℃; Liquid Temperature：22.8 ℃

DASY5 Configuration:
- Probe: EX3DV4 - SN7630; ConvF(10.05, 10.05, 10.05); Calibrated: 2022/3/4
- Sensor-Surface: 1.4mm (Mechanical Surface Detection)
- Electronics: DAE4 Sn1305; Calibrated: 2022/4/27
- Phantom: Twin-SAM 1; Type: SAM Twin; Serial: 2024
- Measurement SW: DASY52, Version 52.10 (4); SEMCAD X Version 14.6.14 (7501)

Area Scan (81x81x1): Interpolated grid: dx=1.500 mm, dy=1.500 mm
Maximum value of SAR (interpolated) = 1.38 W/kg

Zoom Scan (6x6x7)/Cube 0: Measurement grid: dx=8mm, dy=8mm, dz=5mm
Reference Value = 26.51 V/m; Power Drift = 0.12 dB
Peak SAR (extrapolated) = 1.40 W/kg
SAR(1 g) = 0.695 W/kg; SAR(10 g) = 0.423 W/kg
Maximum value of SAR (measured) = 1.12 W/kg

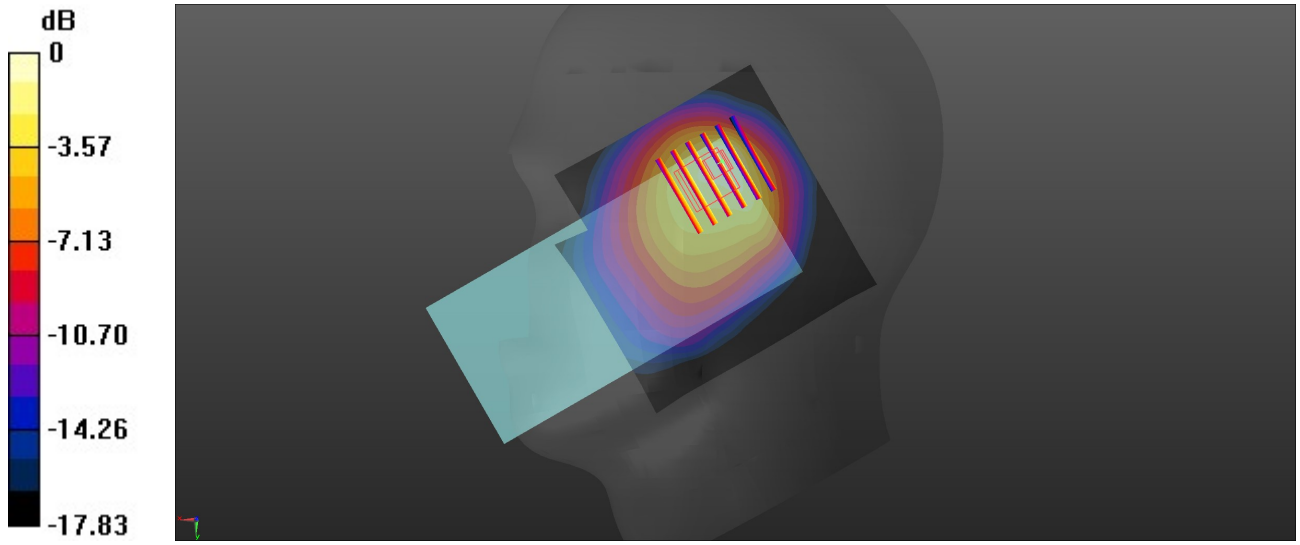

0 dB = 1.12 W/kg = 0.49 dBW/kg