HEARING AID COMPATIBILITY RF EMISSIONS TEST REPORT

FCC ID : **IHDT56AL5**
Equipment : **Mobile Cellular Phone**
Brand Name : **Motorola**
Model Name : **XT2305-1**
M-Rating : **M3**
Applicant : **Motorola Mobility LLC**
222 W,Merchandise Mart Plaza, Chicago IL 60654 USA
Manufacturer : **Motorola Mobility LLC**
222 W,Merchandise Mart Plaza, Chicago IL 60654 USA
Standard : **FCC 47 CFR §20.19**
ANSI C63.19-2011

We, Sporton International Inc. (Kunshan), would like to declare that the tested sample has been evaluated in accordance with the test procedures and has been in compliance with the applicable technical standards.

The test results in this report apply exclusively to the tested model / sample. Without written approval of Sporton International Inc. (Kunshan), the test report shall not be reproduced except in full.

Si Zhang

Approved by: Si Zhang

ACCREDITED
Cert #5145.02

Sporton International Inc. (Kunshan)
No. 1098, Pengxi North Road, Kunshan Economic Development Zone Jiangsu Province 215300 People's Republic of China

Table of Contents

1. General Information 4
2. Testing Location 6
3. Applied Standards 6
4. RF Audio Interference Level 6
5. Air Interface and Operating Mode 7
6. Measurement System Specification 9
   6.1 E-Field Probe System 9
   6.2 Data Storage and Evaluation 10
7. RF Emissions Test Procedure 11
8. Test Equipment List 14
9. Measurement System Validation 15
10. Modulation Interference Factor 16
11. Low-power Exemption 17
12. Conducted RF Output Power (Unit: dBm) 22
13. HAC RF Emission Test Results 25
14. Uncertainty Assessment 27
15. References 29

Appendix A. Plots of System Performance Check
Appendix B. Plots of RF Emission Measurement
Appendix C. DASY Calibration Certificate
Appendix D. Test Setup Photos
Appendix E. UID specifications for HAC RFE

History of this test report

Report No.	Version	Description	Issued Date
HA322305A	Rev. 01	Initial issue of report	Apr. 23, 2023
HA322305A	Rev. 02	Added evaluation for UNII 5 Below 6GHz	May 11, 2023

1. General Information

Product Feature & Specification	
Applicant Name	Motorola Mobility LLC
Equipment Name	Mobile Cellular Phone
Brand Name	Motorola
Model Name	XT2305-1
IMEI Code	IMEI 1: 351048560018735 IMEI 2: 351048560018743
FCC ID	IHDT56AL5
HW	DVT2
SW	TTT33.46
EUT Stage	Identical Prototype
Date Tested	2023/3/15 ~ 2023/3/17
Frequency Band	GSM850: 824 MHz ~ 849 MHz GSM1900: 1850 MHz ~ 1910 MHz WCDMA Band II: 1850 MHz ~ 1910 MHz WCDMA Band IV: 1710 MHz ~ 1755 MHz WCDMA Band V: 824 MHz ~ 849 MHz LTE Band 2: 1850 MHz ~ 1910 MHz LTE Band 4: 1710 MHz ~ 1755 MHz LTE Band 5: 824 MHz ~ 849 MHz LTE Band 7: 2500 MHz ~ 2570 MHz LTE Band 12: 699 MHz ~ 716 MHz LTE Band 13: 777 MHz ~ 787 MHz LTE Band 14: 788 MHz ~ 798 MHz LTE Band 17: 704 MHz ~ 716 MHz LTE Band 25: 1850 MHz ~ 1915 MHz LTE Band 26: 814 MHz ~ 849 MHz LTE Band 30: 2305 MHz ~ 2315 MHz LTE Band 38: 2570 MHz ~ 2620 MHz LTE Band 41: 2496 MHz ~ 2690 MHz LTE Band 48: 3550 MHz ~ 3700 MHz LTE Band 66: 1710 MHz ~ 1780 MHz LTE Band 71: 663 MHz ~ 698 MHz 5G NR n2 : 1850 MHz ~ 1910 MHz 5G NR n5: 824 MHz ~ 849 MHz 5G NR n7: 2500 MHz ~ 2570 MHz 5G NR n12 : 699 MHz ~ 716 MHz 5G NR n14 : 788 MHz ~ 798 MHz 5G NR n25 : 1850 MHz ~ 1915 MHz 5G NR n26 : 814 MHz ~ 849 MHz 5G NR n30 : 2305 MHz ~ 2315 MHz 5G NR n66: 1710 MHz ~ 1780 MHz 5G NR n70 : 1695 MHz ~ 1710 MHz 5G NR n71 : 663 MHz ~ 698 MHz 5G NR n38 : 2570 MHz ~ 2620 MHz 5G NR n41 : 2496 MHz ~ 2690 MHz 5G NR n48 : 3550 MHz ~ 3700 MHz 5G NR n77: 3450 MHz ~ 3550 MHz, 3700 MHz ~ 3980 MHz 5G NR n78: 3450 MHz ~ 3550 MHz, 3700 MHz ~ 3800 MHz WLAN 2.4GHz Band: 2412 MHz ~ 2462 MHz WLAN 5.2GHz Band: 5180 MHz ~ 5240 MHz WLAN 5.3GHz Band: 5260 MHz ~ 5320 MHz WLAN 5.5GHz Band: 5500 MHz ~ 5700 MHz WLAN 5.8GHz Band: 5745 MHz ~ 5825 MHz WLAN 6GHz U-NII-5: 5925 MHz ~ 6425 MHz WLAN 6GHz U-NII-6: 6425 MHz ~ 6525 MHz WLAN 6GHz U-NII-7: 6525 MHz ~ 6875 MHz WLAN 6GHz U-NII-8: 6875 MHz ~ 7125 MHz Bluetooth: 2402 MHz ~ 2480 MHz WPT: 111 kHz ~ 145 kHz NFC: 13.56 MHz
Mode	GSM/GPRS/EGPRS RMC/AMR 12.2Kbps HSDPA HSUPA

	DC-HSDPA HSPA+(16QAM uplink is not supported) LTE: QPSK, 16QAM, 64QAM, 256QAM 5G NR : CP-OFDM / DFT-s-OFDM, PI/2 BPSK, QPSK, 16QAM, 64QAM, 256QAM WLAN 2.4GHz 802.11b/g/n HT20/HT40 WLAN 2.4GHz 802.11ac/ax VHT20/VHT40/HE20/HE40 WLAN 5GHz 802.11a/n HT20/HT40 WLAN 5GHz 802.11ac/ax VHT20/VHT40/VHT80/HE20/HE40/HE80 WLAN 6GHz 802.11ax HE20/HE40/HE80 Bluetooth BR/EDR/LE WPT: ASK NFC: ASK

2. Testing Location

Sporton International Inc. (Kunshan) is accredited to ISO/IEC 17025:2017 by American Association for Laboratory Accreditation with Certificate Number 5145.02.

Testing Laboratory			
Test Firm	Sporton International Inc. (Kunshan)		
Test Site Location	No. 1098, Pengxi North Road, Kunshan Economic Development Zone Jiangsu Province 215300 People's Republic of China TEL : +86-512-57900158 FAX : +86-512-57900958		
Test Site No.	Sporton Site No.	FCC Designation No.	FCC Test Firm Registration No.
	SAR01-KS	CN1257	314309

3. Applied Standards

- FCC CFR47 Part 20.19
- ANSI C63.19-2011
- FCC KDB 285076 D01 HAC Guidance v06r02
- FCC KDB 285076 D03 HAC FAQ v01r06

4. RF Audio Interference Level

FCC wireless hearing aid compatibility rules ensure that consumers with hearing loss are able to access wireless communications services through a wide selection of handsets without experiencing disabling radio frequency (RF) interference or other technical obstacles.
To define and measure the hearing aid compatibility of handsets, in CFR47 part 20.19 ANSI C63.19 is referenced. A handset is considered hearing aid-compatible for acoustic coupling if it meets a rating of at least M3 under ANSI C63.19, and A handset is considered hearing aid compatible for inductive coupling if it meets a rating of at least T3. According to ANSI C63.19 2011 version, for acoustic coupling, the RF electric field emissions of wireless communication devices should be measured and rated according to the emission level as below.

Emission Categories	E-field emissions	
	<960Mhz	>960Mhz
M1	50 to 55 dB (V/m)	40 to 45 dB (V/m)
M2	45 to 50 dB (V/m)	35 to 40 dB (V/m)
M3	40 to 45 dB (V/m)	30 to 35 dB (V/m)
M4	<40 dB (V/m)	<30 dB (V/m)

Table 4.1 Telephone near-field categories in linear units

5. Air Interface and Operating Mode

Air Interface	Band MHz	Type	C63.19 Tested	Simultaneous Transmitter	Name of Voice Service	Power Reduction
GSM	GSM850	VO	Yes	WLAN, BT	CMRS Voice	No
	GSM1900			WLAN, BT		No
	EDGE850	VD	Yes	WLAN, BT	Google Duo google Fi	No
	EDGE1900			WLAN, BT		
WCDMA	Band II	VO	No(1)	WLAN, BT	CMRS Voice	No
	Band IV			WLAN, BT		No
	Band V			WLAN, BT		No
	HSPA	VD	No(1)	WLAN, BT	Google Duo google Fi	No
LTE (FDD)	Band 2	VD	No(1)	5G NR, WLAN, BT	VoLTE / Google Duo google Fi	No
	Band 4			5G NR, WLAN, BT		No
	Band 5			5G NR, WLAN, BT		No
	Band 7			5G NR, WLAN, BT		No
	Band 12			5G NR, WLAN, BT		No
	Band 13			5G NR, WLAN, BT		No
	Band 14			5G NR, WLAN, BT		No
	Band 17			5G NR, WLAN, BT		No
	Band 25			5G NR, WLAN, BT		No
	Band 26			5G NR, WLAN, BT		No
	Band 30			5G NR, WLAN, BT		No
	Band 66			5G NR, WLAN, BT		No
	Band 71			5G NR, WLAN, BT		No
LTE (TDD)	Band 38	VD	Yes	5G NR, WLAN, BT	VoLTE / Google Duo google Fi	No
	Band 41			5G NR, WLAN, BT		No
	Band 48			5G NR, WLAN, BT		No
5G NR (FDD)	n2	VD	No(1)	LTE, WLAN, BT	VoNR / Google Duo google Fi	No
	n5			LTE, WLAN, BT		No
	n7			LTE, WLAN, BT		No
	n12			LTE, WLAN, BT		No
	n14			LTE, WLAN, BT		No
	n25			LTE, WLAN, BT		No
	n26			LTE, WLAN, BT		No
	n30			LTE, WLAN, BT		No
	n66			LTE, WLAN, BT		No
	n70			LTE, WLAN, BT		No
	n71			LTE, WLAN, BT		No
5G NR (TDD)	n38	VD	No(1)	LTE, WLAN, BT	VoNR / Google Duo google Fi	No
	n41			LTE, WLAN, BT		No
	n48			LTE, WLAN, BT		No
	n77			LTE, WLAN, BT		No
	n78			LTE, WLAN, BT		No
Wi-Fi	2450	VD	Yes	GSM,WCDMA,LTE,5G NR, BT	VoWiFi / Google Duo google Fi	No
	5200	VD	Yes	GSM,WCDMA,LTE,5G NR, BT		No
	5300			GSM,WCDMA,LTE,5G NR, BT		No
	5500			GSM,WCDMA,LTE,5G NR, BT		No
	5800			GSM,WCDMA,LTE,5G NR, BT		No
	U-NII-5	VD	No(3)	GSM,WCDMA,LTE,5G NR, BT	Google Duo google Fi	No
	U-NII-6			GSM,WCDMA,LTE,5G NR, BT		No
	U-NII-7			GSM,WCDMA,LTE,5G NR, BT		No
	U-NII-8			GSM,WCDMA,LTE,5G NR, BT		No
BT	2450	DT	No	GSM,WCDMA,LTE,5G NR, WLAN 5GHz, WLAN 6GHz, WLAN 2.4GHz	NA	No

Type Transport:
VO= Voice only
DT= Digital Transport only (no voice)
VD= CMRS and IP Voice Service over Digital Transport

Remark:

1. The air interface is exempted from testing by low power exemption that its average antenna input power plus its MIF is ≤17 dBm, and is rated as M4.
2. The device have similar frequency in some LTE bands: LTE B38/41, since the supported frequency spans for the smaller LTE bands are completely cover by the larger LTE bands, therefore, only larger LTE bands were required to be tested for hearing-aid compliance.
3. The UNII-5 was evaluated for operations which are entirely below 6 GHz, above 6 GHz were not evaluated due outside of the current scope of ANSI C63.19 and FCC HAC regulations. The U-NII 6/7/8 were above 6GHz and were not evaluated due to outside of the current scope of ANSI C63.19 and FCC HAC regulations.

6. Measurement System Specification

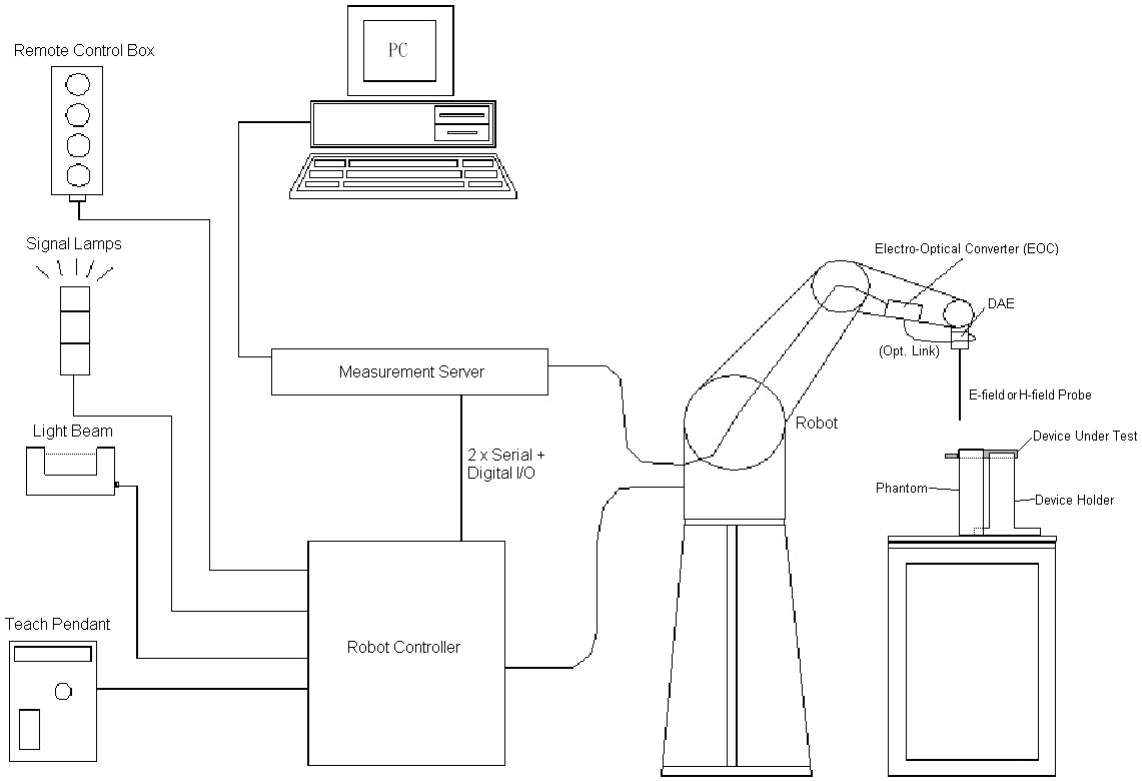

Fig 6.1 System Configurations

6.1 E-Field Probe System

E-Field Probe Specification
<EF3DV3>

Construction	One dipole parallel, two dipoles normal to probe axis Built-in shielding against static charges
Calibration	In air from 30 MHz to 6.0 GHz (absolute accuracy ±6.0%, k=2)
Frequency	30 MHz to 6 GHz; Linearity: ± 2.0 dB (100 MHz to 3 GHz)
Directivity	± 0.2 dB in air (rotation around probe axis) ± 0.4 dB in air (rotation normal to probe axis)
Dynamic Range	2 V/m to 1000 V/m (M3 or better device readings fall well below diode compression point)
Linearity	± 0.2 dB
Dimensions	Overall length: 337 mm (Tip: 20 mm) Tip diameter: 4 mm (Body: 12 mm) Distance from probe tip to dipole centers: 1.5 mm

Photo of E-field Probe

Probe Tip Description:
HAC field measurements take place in the close near field with high gradients. Increasing the measuring distance from the source will generally decrease the measured field values (in case of the validation dipole approx. 10%per mm).

6.2 Data Storage and Evaluation

The DASY software stores the assessed data from the data acquisition electronics as raw data (in microvolt readings from the probe sensors), together with all the necessary software parameters for the data evaluation (probe calibration data, and device frequency and modulation data) in measurement files.

Probe parameters :	- Sensitivity	$Norm_i$, a_{i0}, a_{i1}, a_{i2}
	- Conversion factor	$ConvF_i$
	- Diode compression point	dcp_i
Device parameters :	- Frequency	f
	- Crest factor	cf
Media parameters :	- Conductivity	σ
	- Density	ρ

The formula for each channel can be given as :

$$\mathbf{V_i = U_i + U_i^2 \cdot \frac{cf}{dcp_i}}$$

with V_i = compensated signal of channel i, (i = x, y, z)
U_i = input signal of channel i, (i = x, y, z)
cf = crest factor of exciting field (DASY parameter)
dcp_i = diode compression point (DASY parameter)

From the compensated input signals, the primary field data for each channel can be evaluated :

E-field Probes : $\mathbf{E_i = \sqrt{\frac{V_i}{Norm_i \cdot ConvF}}}$

with V_i = compensated signal of channel i, (i = x, y, z)
$Norm_i$ = sensor sensitivity of channel i, (i = x, y, z), μV/(V/m)^2 for E-field Probes
ConvF = sensitivity enhancement in solution
f = carrier frequency [GHz]
E_i = electric field strength of channel i in V/m

The RSS value of the field components gives the total field strength (Hermitian magnitude) :

$$\mathbf{E_{tot} = \sqrt{E_x^2 + E_y^2 + E_z^2}}$$

The primary field data are used to calculate the derived field units.

7. RF Emissions Test Procedure

Referenced from ANSI C63.19 -2011 section 5.5.1

a. Confirm the proper operation of the field probe, probe measurement system, and other instrumentation and the positioning system.
b. Position the WD in its intended test position.
c. Set the WD to transmit a fixed and repeatable combination of signal power and modulation characteristic that is representative of the worst case (highest interference potential) encountered in normal use. Transiently occurring start-up, changeover, or termination conditions, or other operations likely to occur less than 1% of the time during normal operation, may be excluded from consideration.
d. The center sub-grid shall be centered on the T-Coil mode perpendicular measurement point or the acoustic output, as appropriate. Locate the field probe at the initial test position in the 50 mm by 50 mm grid, which is contained in the measurement plane, refer to illustrated in Figure 8.2. If the field alignment method is used, align the probe for maximum field reception.
e. Record the reading at the output of the measurement system.
f. Scan the entire 50 mm by 50 mm region in equality spaced increments and record the reading at each measurement point, The distance between measurement points shall be sufficient to assure the identification of the maximum reading.
g. Identify the five contiguous sub-grids around the center sub-grid whose maximum reading is the lowest of all available choices. This eliminates the three sub-grids with the maximum readings. Thus, the six areas to be used to determine the WD's highest emissions are identified.
h. Identify the maximum reading within the non-excluded sub-grids identified in step g).
i. Indirect measurement method
j. The RF audio interference level in dB (V/m) is obtained by adding the MIF (in dB) to the maximum steady-state rms field-strength reading, in dB (V/m)
k. Compare this RF audio interference level with the categories in ANSI C63.19-2011 clause 8 and record the resulting WD category rating.
l. For the T-Coil perpendicular measurement location is ≥5.0 mm from the center of the acoustic output, then two different 50 mm by 50 mm areas may need to be scanned, the first for the microphone mode assessment and the second for the T-Coil assessment.
m. The second for the T-Coil assessment, with the grid shifted so that it is centered on the perpendicular measurement point. Record the WD category rating.

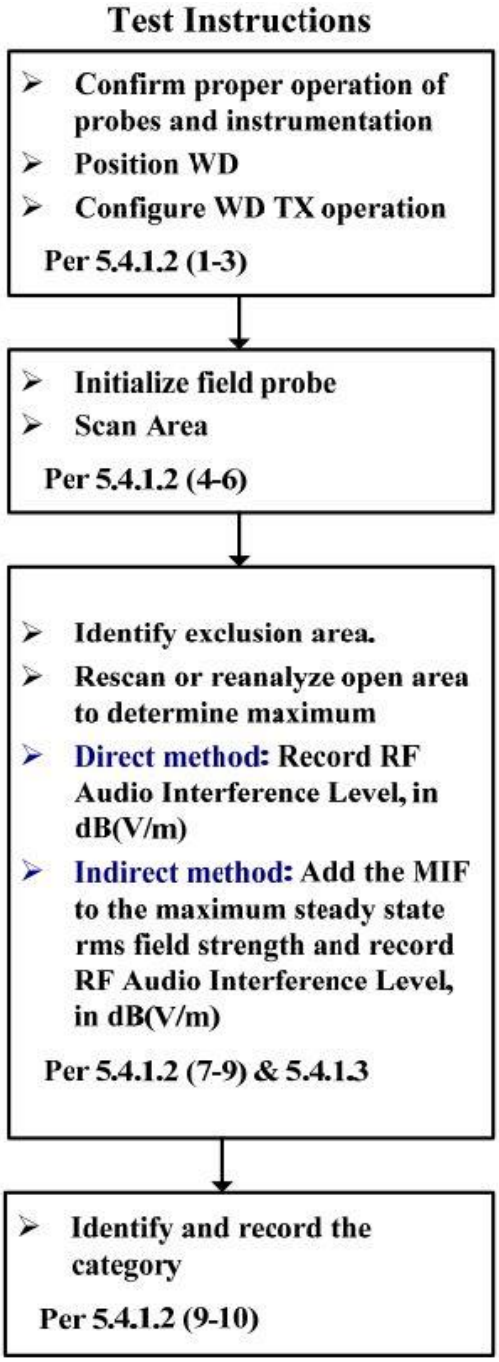

Figure 8.1 RF Emissions Flow Chart

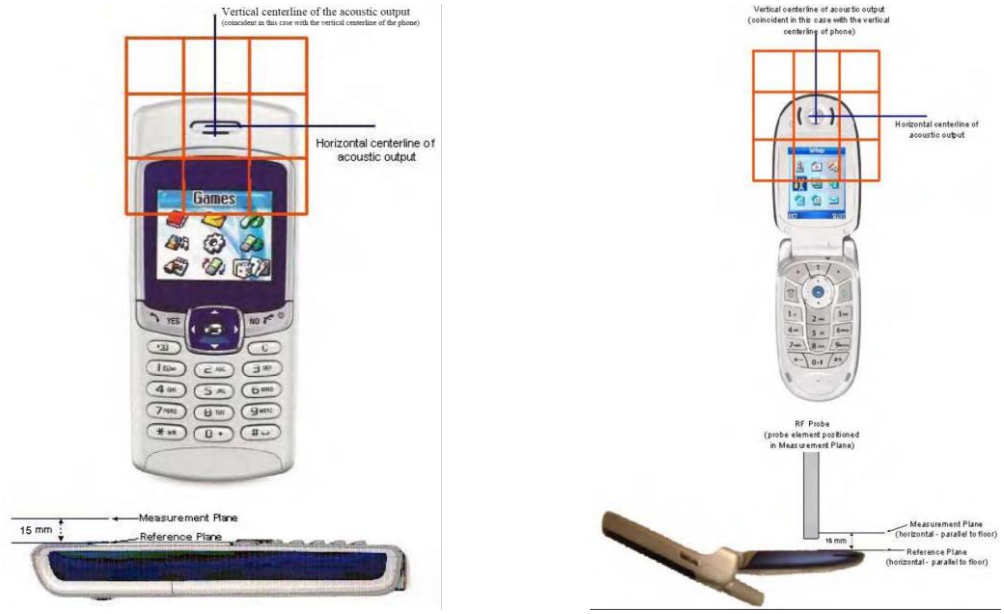

Fig 8.2 EUT reference and plane for HAC RF emission measurements

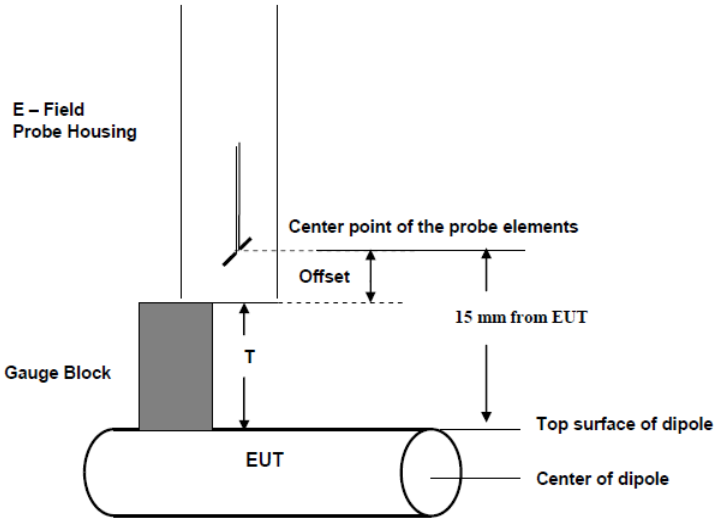

Fig. 8.3 Gauge block with E-field probe

8. Test Equipment List

Manufacturer	Name of Equipment	Type/Model	Serial Number	Calibration	
				Last Cal.	Due Date
SPEAG	835MHz Calibration Dipole	CD835V3	1171	2022/3/1	2025/2/28
SPEAG	1880MHz Calibration Dipole	CD1880V3	1155	2022/3/1	2025/2/28
SPEAG	2450MHz Calibration Dipole	CD2450V3	1155	2021/6/16	2024/6/15
SPEAG	2600Mhz Calibration Dipole	CD2600V3	1030	2022/6/29	2025/6/28
SPEAG	3500Mhz Calibration Dipole	CD3500V3	1020	2022/6/29	2023/6/26
SPEAG	5500Mhz Calibration Dipole	CD5500V3	1012	2022/1/26	2025/1/25
SPEAG	Data Acquisition Electronics	DAE4	1303	2022/11/24	2023/11/23
SPEAG	Isotropic E-Field Probe	EF3DV3	4050	2023/1/24	2024/1/23
R&S	Base Station	CMW500	143030	2022/7/14	2023/7/13
Anritsu	Vector Signal Generator	MG3710A	6201682672	2023/1/5	2024/1/4
BONN	POWER AMPLIFIER	BLMA 0830-3	087193A	NCR	NCR
BONN	POWER AMPLIFIER	BLMA 2060-2	087193B	NCR	NCR
Agilent	Dual Directional Coupler	778D	20500	2022/7/14	2023/7/13
Agilent	Dual Directional Coupler	11691D	MY48151020	2022/7/14	2023/7/13
Rohde & Schwarz	Power Meter	NRVD	102081	2022/7/14	2023/7/13
Rohde & Schwarz	Power Sensor	NRV-Z5	100538	2022/7/14	2023/7/13
Rohde & Schwarz	Power Sensor	NRV-Z5	100539	2022/7/14	2023/7/13
MCL	Attenuation1	BW-S10W5+	N/A	NCR	NCR
MCL	Attenuation2	BW-S10W5+	N/A	NCR	NCR
MCL	Attenuation3	BW-S10W5+	N/A	NCR	NCR
Rohde & Schwarz	Spectrum Analyzer	FSV7	101631	2022/10/12	2023/10/11
Testo	Thermo-Hygrometer	608-H1	1241332126	2023/1/5	2024/1/4
SPEAG	Test Arch Phantom	N/A	N/A	NCR	NCR
SPEAG	Phone Positioner	N/A	N/A	NCR	NCR

Note:
1. NCR: “No-Calibration Required”
2. Referring to KDB 865664 D01v01r04, the dipole calibration interval can be extended to 3 years with justification. The dipoles are also not physically damaged, or repaired during the interval.
3. The justification data of dipole can be found in appendix C. The return loss is < -20dB, within 20% of prior calibration, the impedance is within 5 ohm of prior calibration.

9. Measurement System Validation

Each DASY system is equipped with one or more system validation kits. These units, together with the predefined measurement procedures within the DASY software, enable the user to conduct the system performance check and system validation. System validation kit includes a dipole, tripod holder to fix it underneath the test Arch and a corresponding distance holder.
The system performance check verifies that the system operates within its specifications. System and operator errors can be detected and corrected. It is recommended that the system performance check be performed prior to any usage of the system in order to guarantee reproducible results. The system performance check uses normal HAC measurements in a simplified setup with a well characterized source. This setup was selected to give a high sensitivity to all parameters that might fail or vary over time. The system check does not intend to replace the calibration of the components, but indicates situations where the system uncertainty is exceeded due to drift or failure.

<Test Setup>

1. In the simplified setup for system evaluation, the EUT is replaced by a calibrated dipole and the power source is replaced by a continuous wave which comes from a signal generator.
2. The center point of the probe element(s) is 15mm from the closest surface of the dipole elements.
3. The calibrated dipole must be placed beneath the arch phantom. The equipment setup is shown below:
4. The output power on dipole port must be calibrated to 20dBm (100mW) before dipole is connected.

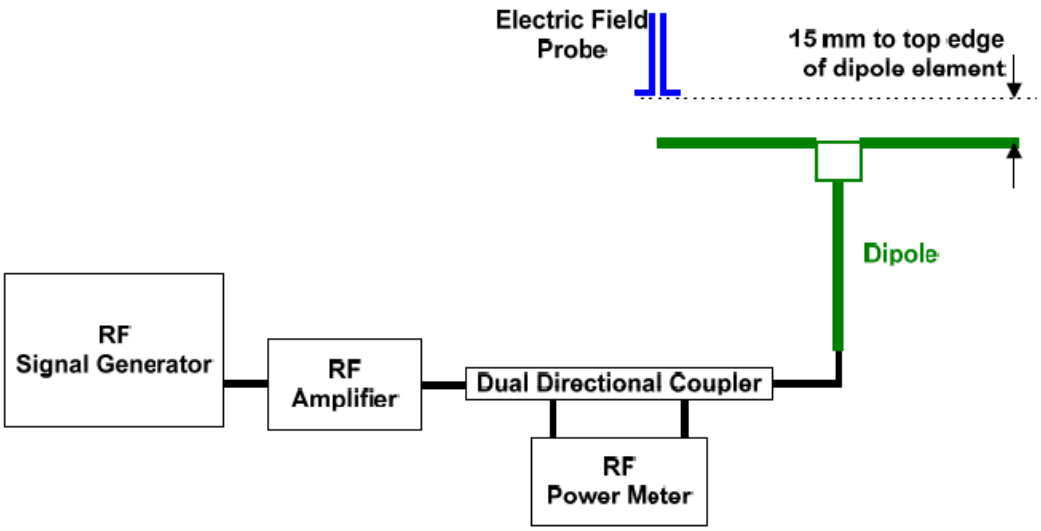

Fig. 7.1 Setup Diagram

<Validation Results>

Comparing to the original E-field value provided by SPEAG, the verification data should be within its specification of 18 %. Table 6.1 shows the target value and measured value. The table below indicates the system performance check can meet the variation criterion and the plots can be referred to appendix A of this report.
Deviation = ((Average E-field Value) - (Target value)) / (Target value) * 100%

Frequency (MHz)	Input Power (dBm)	Target Value (V/m)	E-Field 1 (V/m)	E-Field 2 (V/m)	Average Value (V/m)	Deviation (%)	Date
835	20	107.7	101.3	95.12	98.21	-8.81	2023/3/15
1880	20	85.1	95.15	91.35	93.25	9.58	2023/3/15
2450	20	85.1	93.15	90.31	91.73	7.79	2023/3/16
2600	20	86	96.71	94.15	95.43	10.97	2023/3/16
3500	20	83.6	94.36	89.42	91.89	9.92	2023/3/17
5500	20	100.6	105.2	102.2	103.7	3.08	2023/3/17

10. Modulation Interference Factor

The HAC Standard ANSI C63.19-2011 defines a new scaling using the Modulation Interference Factor (MIF).
For any specific fixed and repeatable modulated signal, a modulation interference factor (MIF, expressed in dB) may be developed that relates its interference potential to its steady-state rms signal level or average power level. This factor is a function only of the audio-frequency amplitude modulation characteristics of the signal and is the same for field-strength and conducted power measurements. It is important to emphasize that the MIF is valid only for a specific repeatable audio-frequency amplitude modulation characteristic. Any change in modulation characteristic requires determination and application of a new MIF
The Modulation Interference factor (MIF, in dB) is added to the measured average E-field (in dBV/m) and converts it to the RF Audio Interference level (in dBV/m). This level considers the audible amplitude modulation components in the RF E-field. CW fields without amplitude modulation are assumed to not interfere with the hearing aid electronics. Modulations without time slots and low fluctuations at low frequencies have low MIF values, TDMA modulations with narrow transmission and repetition rates of few 100 Hz have high MIF values and give similar classifications as ANSI C63.19-2011.
ER3D, EF3D and EU2D E-field probes have a bandwidth <10 kHz and can therefore not evaluate the RF envelope in the full audio band. DASY52 is therefore using the indirect measurement method according to ANSI C63.19-2011 which is the primary method. These near field probes read the averaged E-field measurement. Especially for the new high peak-to-average (PAR) signal types, the probes shall be linearized by PMR calibration in order to not overestimate the field reading. Probe Modulation Response (PMR) calibration linearizes the probe response over its dynamic range for specific modulations which are characterized by their UID and result in an uncertainty specified in the probe calibration certificate. The MIF is characteristic for a given waveform envelope and can be used as a constant conversion factor if the probe has been PMR calibrated.
The evaluation method for the MIF is defined in ANSI C63.19-2011 section D.7. An RMS demodulated RF signal is fed to a spectral filter (similar to an A weighting filter) and forwarded to a temporal filter acting as a quasi-peak detector. The averaged output of these filtering is scaled to a 1 kHz 80% AM signal as reference. MIF measurement requires additional instrumentation and is not well suited for evaluation by the end user with reasonable uncertainty. It may alliteratively be determined through analysis and simulation, because it is constant and characteristic for a communication signal. DASY52 uses well-defined signals for PMR calibration. The MIF of these signals has been determined by simulation and it is automatically applied.
The MIF measurement uncertainty is estimated as follows, declared by HAC equipment provider SPEAG, for modulation frequencies from slotted waveforms with fundamental frequency and at least 2 harmonics within 10 kHz:

1. 0.2 dB for MIF: -7 to +5 dB
2. 0.5 dB for MIF: -13 to +11 dB
3. 1 dB for MIF: > -20 dB

MIF values applied in this test report were provided by the HAC equipment provider of SPEAG, and the worst values for all air interface are listed below to be determine the Low-power Exemption.

UID	Communication System Name	MIF(dB)
10021	GSM-FDD(TDMA,GMSK)	3.63
10025	EDGE-FDD (TDMA, 8PSK, TN 0)	3.75
10460	UMTS-FDD(WCDMA, AMR)	-25.43
10225	UMTS-FDD (HSPA+)	-20.39
10170	LTE-FDD(SC-FDMA,1RB,20MHz,16-QAM)	-9.76
10173	LTE-TDD (SC-FDMA, 1 RB, 20 MHz, 16-QAM)	-1.44
10769	5G NR (CP-OFDM, 1 RB, 15 MHz, QPSK, 15 kHz)	-12.08
10061	IEEE 802.11b WiFi 2.4 GHz (DSSS, 11 Mbps)	-2.02
10077	IEEE 802.11g WiFi 2.4 GHz (DSSS/OFDM, 54 Mbps)	0.12
10427	IEEE 802.11n (HT Greeneld, 150 Mbps, 64-QAM)	-13.44
10069	IEEE 802.11a/h WiFi 5 GHz (OFDM, 54 Mbps)	-3.15
10616	IEEE 802.11ac WiFi (40MHz, MCS0, 90pc duty cycle)	-5.57
10671	IEEE 802.11ax (20MHz, MCS0, 90pc duty cycle)	-5.58

11. Low-power Exemption

<Max Tune-up Limit>

<Ant0>

Frequency Band		Average Power (dBm)
GSM	GSM850	33.50
	EDGE850	27.50
	GSM1900	30.50
	EDGE1900	26.50
WCDMA	Band V	24.00
	Band IV	24.00
	Band II	24.00
	HSPA	23.00
FDD LTE	Band 2	24.00
	Band 4	24.00
	Band 5	24.00
	Band 7	24.00
	Band 12	24.00
	Band 13	24.00
	Band 14	24.00
	Band 17	24.00
	Band 25	24.00
	Band 26	24.00
	Band 30	24.00
	Band 66	24.00
	Band 71	24.00
TDD LTE	Band 38	24.00
	Band 41	24.00
	Band 41_HPUE	27.00
5G NR FDD	n2	24.00
	n5	24.00
	n7	24.00
	n12	24.00
	n14	24.00
	n25	24.00
	n26	24.00
	n30	24.00
	n66	24.00
	n70	24.00
	n71	24.00
5G NR TDD	n38	24.00
	n41	24.00
	n41_PC2	27.00

<Ant1>

Frequency Band		Average Power (dBm)
FDD LTE	Band 2	24.00
	Band 4	24.00
	Band 5	24.00
	Band 7	24.00
	Band 12	24.00
	Band 13	24.00
	Band 14	24.00
	Band 17	24.00
	Band 25	24.00
	Band 26	24.00
	Band 30	24.00
	Band 66	24.00
	Band 71	24.00
TDD LTE	Band 38	24.00
	Band 41	24.00
	Band 41_HPUE	27.00
5G NR FDD	n2	24.00
	n5	24.00
	n7	24.00
	n12	24.00
	n14	24.00
	n25	24.00
	n26	24.00
	n30	24.00
	n66	24.00
	n70	24.00
	n71	24.00
5G NR TDD	n38	24.00
	n41	24.00
	n41_PC2	27.00

<Ant2>

Frequency Band		Average Power (dBm)
TDD LTE	Band 41	24.00
	Band 41_HPUE	27.00
	Band 48	24.00
5G NR TDD	n41	24.00
	n41_PC2	27.00
	n48	24.00
	n77	24.00
	n77_PC2	27.00
	n78	24.00

<Ant4>

Frequency Band		Average Power (dBm)
TDD LTE	Band 48	24.00
5G NR TDD	n48	24.00
	n77	24.00
	n77_PC2	27.00
	n78	24.00

<Ant5>

Frequency Band		Average Power (dBm)
TDD LTE	Band 48	24.00
5G NR TDD	n48	24.00
	n77	24.00
	n77_PC2	27.00
	n78	24.00

<Ant6>

Frequency Band		Average Power (dBm)
TDD LTE	Band 41	24.00
	Band 41_PC2	27.00
5G NR TDD	n41	24.00
	n41_PC2	27.00

<Ant7>

Frequency Band		Average Power (dBm)
TDD LTE	Band 48	24.00
5G NR TDD	n48	24.00
	n77_PC2&3	24.30
	n78	24.00

<Ant3+8>

Frequency Band		Average Power (dBm)
2.4GHz WLAN	802.11b	24.50
	802.11g	23.50
	802.11n-HT20	23.00
	802.11n-HT40	20.50
	802.11ac-VHT20	23.00
	802.11ac-VHT40	20.50
	802.11ax-HE20	22.50
	802.11ax-HE40	20.50
5GHz WLAN	802.11a	22.50
	802.11n-HT20	22.00
	802.11n-HT40	23.00
	802.11ac-VHT20	22.00
	802.11ac-VHT40	23.00
	802.11ac-VHT80	22.50
	802.11ax-HE20	22.50
	802.11ax-HE40	23.00
	802.11ax-HE80	22.50
6GHz WLAN	802.11ax-HE20	16.00
	802.11ax-HE40	19.00
	802.11ax-HE80	19.50

<Low Power Exemption>

<Ant0>

Air Interface	Max Average Antenna Input Power (dBm)	Worst Case MIF (dB)	Power + MIF(dB)	C63.19 test required
GSM850	33.50	3.63	37.13	Yes
EDGE850	27.50	3.75	31.25	No(1)
GSM1900	30.50	3.63	34.13	Yes
EDGE1900	26.50	3.75	30.25	No(1)
WCDMA	24.00	-25.43	-1.43	No
WCDMA - HSPA	23.00	-20.39	2.61	No
LTE - FDD	24.00	-9.76	14.24	No
LTE – TDD	27.00	-1.44	25.56	Yes
5G NR - FDD	24.00	-12.08	11.92	No
5G NR - TDD	27.00	-12.08	14.92	No

<Ant1>

Air Interface	Max Average Antenna Input Power (dBm)	Worst Case MIF (dB)	Power + MIF(dB)	C63.19 test required
LTE - FDD	24.00	-9.76	14.24	No
LTE – TDD	27.00	-1.44	25.56	Yes
5G NR - FDD	24.00	-12.08	11.92	No
5G NR - TDD	27.00	-12.08	14.92	No

<Ant2>

Air Interface	Max Average Antenna Input Power (dBm)	Worst Case MIF (dB)	Power + MIF(dB)	C63.19 test required
LTE – TDD	27.00	-1.44	25.56	Yes
5G NR - TDD	27.00	-12.08	14.92	No

<Ant4>

Air Interface	Max Average Antenna Input Power (dBm)	Worst Case MIF (dB)	Power + MIF(dB)	C63.19 test required
LTE – TDD	24.00	-1.44	22.56	Yes
5G NR - TDD	27.00	-12.08	14.92	No

<Ant5>

Air Interface	Max Average Antenna Input Power (dBm)	Worst Case MIF (dB)	Power + MIF(dB)	C63.19 test required
LTE – TDD	24.00	-1.44	22.56	Yes
5G NR - TDD	27.00	-12.08	14.92	No

<Ant6>

Air Interface	Max Average Antenna Input Power (dBm)	Worst Case MIF (dB)	Power + MIF(dB)	C63.19 test required
LTE – TDD	27.00	-1.44	25.56	Yes
5G NR - TDD	27.00	-12.08	14.92	No

<Ant7>

Air Interface	Max Average Antenna Input Power (dBm)	Worst Case MIF (dB)	Power + MIF(dB)	C63.19 test required
LTE – TDD	24.00	-1.44	22.56	Yes
5G NR - TDD	24.30	-12.08	12.22	No

<Ant3+8>

Frequency Band	Air Interface	Max Average Antenna Input Power (dBm)	Worst Case MIF (dB)	Power + MIF(dB)	C63.19 test required
2.4GHz WLAN	802.11b	24.50	-2.02	22.48	No(2)
	802.11g	23.50	0.12	23.62	Yes
	802.11n-HT20	23.00	-13.44	9.56	No
	802.11n-HT40	20.50	-13.44	7.06	No
	802.11ac-VHT20	23.00	-5.57	17.43	No
	802.11ac-VHT40	20.50	-5.57	14.93	No
	802.11ax-HE20	22.50	-5.58	16.92	No
	802.11ax-HE40	20.50	-5.58	14.92	No
5GHz WLAN	802.11a	22.50	-3.15	19.35	Yes
	802.11n-HT20	22.00	-13.44	8.56	No
	802.11n-HT40	23.00	-13.44	9.56	No
	802.11ac-VHT20	22.00	-5.57	16.43	No
	802.11ac-VHT40	23.00	-5.57	17.43	No(2)
	802.11ac-VHT80	22.50	-5.57	16.93	No
	802.11ax-HE20	22.50	-5.58	16.92	No
	802.11ax-HE40	23.00	-5.58	17.42	No(2)
	802.11ax-HE80	22.50	-5.58	16.92	No
6GHz WLAN	802.11ax-HE20	16.00	-5.58	10.42	No
	802.11ax-HE40	19.00	-5.58	13.42	No
	802.11ax-HE80	19.50	-5.58	13.92	No

General Note:

1. EDGE data modes is not necessary due the GSM Voice mode is the worst case.
2. 802.11b/802.11ac-VHT40/802.11ax-HE40 is not necessary due to the 802.11g/802.11a is the worst case.
3. LTE Band 41 non-HPUE data modes is not necessary due the LTE Band 41 HPUE mode is the worst case.
4. According to ANSI C63.19 2011-version, for the air interface technology of a device is exempt from testing when its average antenna input power plus its MIF is ≤17 dBm for any of its operating modes.
5. HAC RF rating is M4 for the air interface which meets the low power exemption.

12. Conducted RF Output Power (Unit: dBm)

<GSM>

Average Antenna Input Power(dBm)						
Band	GSM850 Ant0			GSM1900 Ant0		
Channel	128	189	251	512	661	810
Frequency (MHz)	824.2	836.4	848.8	1850.2	1880.0	1909.8
GSM (GMSK, 1 Tx slot)	32.02	32.09	32.05	29.24	29.27	29.09

<LTE>

Band 38 Ant0						
BW [MHz]	Modulation	RB Size	RB Offset	Power Low Ch. / Freq.	Power Middle Ch. / Freq.	Power High Ch. / Freq.
Channel				37850	38000	38150
Frequency (MHz)				2580	2595	2610
20	QPSK	1	0	23.15	23.16	23.14

Band 41 Ant0								
BW [MHz]	Modulation	RB Size	RB Offset	Power Low Ch. / Freq.	Power Low Middle Ch. / Freq.	Power Middle Ch. / Freq.	Power High Middle Ch. / Freq.	Power High Ch. / Freq.
Channel				39750	40185	40620	41055	41490
Frequency (MHz)				2506	2549.5	2593	2636.5	2680
20	QPSK	1	0	22.95	23.07	23.24	23.08	23.12

Band 41 HPUE Ant0								
BW [MHz]	Modulation	RB Size	RB Offset	Power Low Ch. / Freq.	Power Low Middle Ch. / Freq.	Power Middle Ch. / Freq.	Power High Middle Ch. / Freq.	Power High Ch. / Freq.
Channel				39750	40185	40620	41055	41490
Frequency (MHz)				2506	2549.5	2593	2636.5	2680
20	QPSK	1	0	26.38	26.25	26.46	26.33	26.26

Band 38 Ant1						
BW [MHz]	Modulation	RB Size	RB Offset	Power Low Ch. / Freq.	Power Middle Ch. / Freq.	Power High Ch. / Freq.
Channel				37850	38000	38150
Frequency (MHz)				2580	2595	2610
20	QPSK	1	0	23.15	23.23	23.17

Band 41 Ant1								
BW [MHz]	Modulation	RB Size	RB Offset	Power Low Ch. / Freq.	Power Low Middle Ch. / Freq.	Power Middle Ch. / Freq.	Power High Middle Ch. / Freq.	Power High Ch. / Freq.
Channel				39750	40185	40620	41055	41490
Frequency (MHz)				2506	2549.5	2593	2636.5	2680
20	QPSK	1	0	22.82	23.03	23.05	22.78	22.76

Band 41 HPUE Ant1								
BW [MHz]	Modulation	RB Size	RB Offset	Power Low Ch. / Freq.	Power Low Middle Ch. / Freq.	Power Middle Ch. / Freq.	Power High Middle Ch. / Freq.	Power High Ch. / Freq.
Channel				39750	40185	40620	41055	41490
Frequency (MHz)				2506	2549.5	2593	2636.5	2680
20	QPSK	1	0	25.85	26.04	26.14	26.08	25.79

Band 41 Ant2								
BW [MHz]	Modulation	RB Size	RB Offset	Power Low Ch. / Freq.	Power Low Middle Ch. / Freq.	Power Middle Ch. / Freq.	Power High Middle Ch. / Freq.	Power High Ch. / Freq.
Channel				39750	40185	40620	41055	41490
Frequency (MHz)				2506	2549.5	2593	2636.5	2680
20	QPSK	1	0	22.43	22.57	22.85	22.69	22.79

Band 41 HPUE Ant2								
BW [MHz]	Modulation	RB Size	RB Offset	Power Low Ch. / Freq.	Power Low Middle Ch. / Freq.	Power Middle Ch. / Freq.	Power High Middle Ch. / Freq.	Power High Ch. / Freq.
Channel				39750	40185	40620	41055	41490
Frequency (MHz)				2506	2549.5	2593	2636.5	2680
20	QPSK	1	0	25.51	25.68	25.82	25.68	25.66

Band 48_Ant2							
BW [MHz]	Modulation	RB Size	RB Offset	Power Low Ch. / Freq.	Power Low Middle Ch. / Freq.	Power High Middle Ch. / Freq.	Power High Ch. / Freq.
Channel				55340	55830	56150	56640
Frequency (MHz)				3560	3609	3641	3690
20	QPSK	1	0	22.75	22.83	22.67	22.73

Band 48_Ant4							
BW [MHz]	Modulation	RB Size	RB Offset	Power Low Ch. / Freq.	Power Low Middle Ch. / Freq.	Power High Middle Ch. / Freq.	Power High Ch. / Freq.
Channel				55340	55830	56150	56640
Frequency (MHz)				3560	3609	3641	3690
20	QPSK	1	0	23.12	23.24	23.16	23.09

Band 48_Ant5							
BW [MHz]	Modulation	RB Size	RB Offset	Power Low Ch. / Freq.	Power Low Middle Ch. / Freq.	Power High Middle Ch. / Freq.	Power High Ch. / Freq.
Channel				55340	55830	56150	56640
Frequency (MHz)				3560	3609	3641	3690
20	QPSK	1	0	22.74	22.89	22.78	22.59

Band 41 Ant6								
BW [MHz]	Modulation	RB Size	RB Offset	Power Low Ch. / Freq.	Power Low Middle Ch. / Freq.	Power Middle Ch. / Freq.	Power High Middle Ch. / Freq.	Power High Ch. / Freq.
Channel				39750	40185	40620	41055	41490
Frequency (MHz)				2506	2549.5	2593	2636.5	2680
20	QPSK	1	0	22.57	22.50	22.67	22.58	22.49

Band 41 HPUE Ant6								
BW [MHz]	Modulation	RB Size	RB Offset	Power Low Ch. / Freq.	Power Low Middle Ch. / Freq.	Power Middle Ch. / Freq.	Power High Middle Ch. / Freq.	Power High Ch. / Freq.
Channel				39750	40185	40620	41055	41490
Frequency (MHz)				2506	2549.5	2593	2636.5	2680
20	QPSK	1	0	25.39	25.36	25.45	25.37	25.41

Band 48_Ant7							
BW [MHz]	Modulation	RB Size	RB Offset	Power Low Ch. / Freq.	Power Low Middle Ch. / Freq.	Power High Middle Ch. / Freq.	Power High Ch. / Freq.
Channel				55340	55830	56150	56640
Frequency (MHz)				3560	3609	3641	3690
20	QPSK	1	0	22.85	22.91	22.63	22.83

<WLAN ant3+8>

2.4GHz WLAN	Mode	Channel	Frequency (MHz)	Average power (dBm)
	802.11g 6Mbps	1	2412	22.30
		6	2437	22.30
		11	2462	17.91

5.2GHz WLAN	Mode	Channel	Frequency (MHz)	Average power (dBm)
	802.11a 6Mbps	36	5180	19.82
		44	5220	20.90
		48	5240	20.44

5.3GHz WLAN	Mode	Channel	Frequency (MHz)	Average power (dBm)
	802.11a 6Mbps	52	5260	20.53
		60	5300	20.14
		64	5320	20.16

5.5GHz WLAN	Mode	Channel	Frequency (MHz)	Average power (dBm)
	802.11a 6Mbps	100	5500	20.45
		116	5580	20.18
		140	5700	20.53

5.8GHz WLAN	Mode	Channel	Frequency (MHz)	Average power (dBm)
	802.11a 6Mbps	149	5745	21.23
		157	5785	21.32
		165	5825	20.85

13. HAC RF Emission Test Results

Plot No.	Air Interface	Mode	Channel	Transmit Ant.	Average Antenna Input Power (dBm)	MIF	E-Field (dBV/m)	Margin to FCC M3 limit (dB)	E-Field M Rating
01	GSM850	Voice	128	Ant 0	32.02	3.63	33.92	11.08	M4
02	GSM850	Voice	189	Ant 0	32.09	3.63	35.26	9.74	M4
03	GSM850	Voice	251	Ant 0	32.05	3.63	34.47	10.53	M4
04	GSM1900	Voice	512	Ant 0	29.24	3.63	26.69	8.31	M4
05	GSM1900	Voice	661	Ant 0	29.27	3.63	26.47	8.53	M4
06	GSM1900	Voice	810	Ant 0	29.09	3.63	26.11	8.89	M4
07	LTE Band 41HPUE	20M_QPSK_1_0	39750	Ant 0	26.38	-1.44	17.61	17.39	M4
08	LTE Band 41HPUE	20M_QPSK_1_0	40185	Ant 0	26.25	-1.44	18.60	16.40	M4
09	LTE Band 41HPUE	20M_QPSK_1_0	40620	Ant 0	26.46	-1.44	16.58	18.42	M4
10	LTE Band 41HPUE	20M_QPSK_1_0	41055	Ant 0	26.33	-1.44	18.26	16.74	M4
11	LTE Band 41HPUE	20M_QPSK_1_0	41490	Ant 0	26.26	-1.44	18.80	16.20	M4
12	LTE Band 41HPUE	20M_QPSK_1_0	39750	Ant 1	25.85	-1.44	34.17	0.83	M3
13	LTE Band 41HPUE	20M_QPSK_1_0	40185	Ant 1	26.04	-1.44	34.49	0.51	M3
14	LTE Band 41HPUE	20M_QPSK_1_0	40620	Ant 1	26.14	-1.44	34.66	0.34	M3
15	LTE Band 41HPUE	20M_QPSK_1_0	41055	Ant 1	26.08	-1.44	34.07	0.93	M3
16	LTE Band 41HPUE	20M_QPSK_1_0	41490	Ant 1	25.79	-1.44	34.30	0.70	M3
17	LTE Band 41HPUE	20M_QPSK_1_0	39750	Ant 2	25.51	-1.44	17.09	17.91	M4
18	LTE Band 41HPUE	20M_QPSK_1_0	40185	Ant 2	25.68	-1.44	19.23	15.77	M4
19	LTE Band 41HPUE	20M_QPSK_1_0	40620	Ant 2	25.82	-1.44	19.38	15.62	M4
20	LTE Band 41HPUE	20M_QPSK_1_0	41055	Ant 2	25.68	-1.44	20.07	14.93	M4
21	LTE Band 41HPUE	20M_QPSK_1_0	41490	Ant 2	25.66	-1.44	21.02	13.98	M4
22	LTE Band 41HPUE	20M_QPSK_1_0	39750	Ant 6	25.39	-1.44	15.39	19.61	M4
23	LTE Band 41HPUE	20M_QPSK_1_0	40185	Ant 6	25.36	-1.44	15.95	19.05	M4
24	LTE Band 41HPUE	20M_QPSK_1_0	40620	Ant 6	25.45	-1.44	15.75	19.25	M4
25	LTE Band 41HPUE	20M_QPSK_1_0	41055	Ant 6	25.37	-1.44	16.24	18.76	M4
26	LTE Band 41HPUE	20M_QPSK_1_0	41490	Ant 6	25.41	-1.44	15.79	19.21	M4
27	LTE Band 48	20M_QPSK_1_0	55340	Ant 2	22.75	-1.44	30.19	4.81	M3
28	LTE Band 48	20M_QPSK_1_0	55830	Ant 2	22.83	-1.44	29.76	5.24	M4
29	LTE Band 48	20M_QPSK_1_0	56150	Ant 2	22.67	-1.44	29.54	5.46	M4
30	LTE Band 48	20M_QPSK_1_0	56640	Ant 2	22.73	-1.44	29.63	5.37	M4
31	LTE Band 48	20M_QPSK_1_0	55340	Ant 4	23.12	-1.44	29.78	5.22	M4
32	LTE Band 48	20M_QPSK_1_0	55830	Ant 4	23.24	-1.44	29.65	5.35	M4
33	LTE Band 48	20M_QPSK_1_0	56150	Ant 4	23.16	-1.44	29.72	5.28	M4
34	LTE Band 48	20M_QPSK_1_0	56640	Ant 4	23.09	-1.44	29.72	5.28	M4
35	LTE Band 48	20M_QPSK_1_0	55340	Ant 5	22.74	-1.44	24.92	10.08	M4
36	LTE Band 48	20M_QPSK_1_0	55830	Ant 5	22.89	-1.44	25.37	9.63	M4
37	LTE Band 48	20M_QPSK_1_0	56150	Ant 5	22.78	-1.44	26.16	8.84	M4
38	LTE Band 48	20M_QPSK_1_0	56640	Ant 5	22.59	-1.44	25.25	9.75	M4
39	LTE Band 48	20M_QPSK_1_0	55340	Ant 7	22.85	-1.44	33.50	1.50	M3
40	LTE Band 48	20M_QPSK_1_0	55830	Ant 7	22.91	-1.44	33.78	1.22	M3
41	LTE Band 48	20M_QPSK_1_0	56150	Ant 7	22.63	-1.44	33.55	1.45	M3
42	LTE Band 48	20M_QPSK_1_0	56640	Ant 7	22.83	-1.44	31.59	3.41	M3
43	WLAN2.4GHz	802.11g 6Mbps	1	Ant 3+8	22.30	0.12	32.16	2.84	M3
44	WLAN2.4GHz	802.11g 6Mbps	6	Ant 3+8	22.30	0.12	31.19	3.81	M3
45	WLAN2.4GHz	802.11g 6Mbps	11	Ant 3+8	17.91	0.12	28.50	6.50	M4
46	WLAN5.2GHz	802.11a 6Mbps	36	Ant 3+8	19.82	-3.15	21.42	13.58	M4

47	WLAN5.2GHz	802.11a 6Mbps	44	Ant 3+8	20.90	-3.15	22.17	12.83	M4
48	WLAN5.2GHz	802.11a 6Mbps	48	Ant 3+8	20.44	-3.15	22.34	12.66	M4
49	WLAN5.3GHz	802.11a 6Mbps	52	Ant 3+8	20.53	-3.15	22.87	12.13	M4
50	WLAN5.3GHz	802.11a 6Mbps	60	Ant 3+8	20.14	-3.15	23.30	11.70	M4
51	WLAN5.3GHz	802.11a 6Mbps	64	Ant 3+8	20.16	-3.15	23.43	11.57	M4
52	WLAN5.5GHz	802.11a 6Mbps	100	Ant 3+8	20.45	-3.15	21.94	13.06	M4
53	WLAN5.5GHz	802.11a 6Mbps	116	Ant 3+8	20.18	-3.15	21.94	13.06	M4
54	WLAN5.5GHz	802.11a 6Mbps	140	Ant 3+8	20.53	-3.15	20.10	14.90	M4
55	WLAN5.8GHz	802.11a 6Mbps	149	Ant 3+8	21.23	-3.15	20.53	14.47	M4
56	WLAN5.8GHz	802.11a 6Mbps	157	Ant 3+8	21.32	-3.15	20.42	14.58	M4
57	WLAN5.8GHz	802.11a 6Mbps	165	Ant 3+8	20.85	-3.15	19.98	15.02	M4

Remark:

1. The HAC measurement system applies MIF value onto the measured RMS E-field, which is indirect method in ANSI C63.19 2011 version, and reports the RF audio interference level.
2. Phone Condition: Mute on; Backlight off; Max Volume

Test Engineer : Martin Li, Varus Wang, Light Wang, Ricky Gu

14. Uncertainty Assessment

The component of uncertainly may generally be categorized according to the methods used to evaluate them. The evaluation of uncertainly by the statistical analysis of a series of observations is termed a Type A evaluation of uncertainty. The evaluation of uncertainty by means other than the statistical analysis of a series of observation is termed a Type B evaluation of uncertainty. Each component of uncertainty, however evaluated, is represented by an estimated standard deviation, termed standard uncertainty, which is determined by the positive square root of the estimated variance.

The combined standard uncertainty of the measurement result represents the estimated standard deviation of the result. It is obtained by combining the individual standard uncertainties of both Type A and Type B evaluation using the usual “root-sum-squares” (RSS) methods of combining standard deviations by taking the positive square root of the estimated variances. Expanded uncertainty is a measure of uncertainty that defines an interval about the measurement result within which the measured value is confidently believed to lie. It is obtained by multiplying the combined standard uncertainty by a coverage factor. For purpose of this document, a coverage factor two is used, which corresponds to confidence interval of about 95 %. The DASY uncertainty Budget is showed in Table 14.1.

The judgment of conformity in the report is based on the measurement results excluding the measurement uncertainty.

Error Description	Uncertainty Value (±%)	Probability	Divisor	(Ci) E	Standard Uncertainty (E) (±%)
Measurement System					
Probe Calibration	5.1	N	1	1	5.1
Axial Isotropy	4.7	R	1.732	1	2.7
Sensor Displacement	16.5	R	1.732	1	9.5
Boundary Effects	2.4	R	1.732	1	1.4
Phantom Boundary Effect	7.2	R	1.732	1	4.2
Linearity	4.7	R	1.732	1	2.7
Scaling with PMR calibration	10.0	R	1.732	1	5.8
System Detection Limit	1.0	R	1.732	1	0.6
Readout Electronics	0.3	N	1	1	0.3
Response Time	2.6	R	1.732	1	1.5
Integration Time	2.6	R	1.732	1	1.5
RF Ambient Conditions	3.0	R	1.732	1	1.7
RF Reflections	12.0	R	1.732	1	6.9
Probe Positioner	1.2	R	1.732	1	0.7
Probe Positioning	4.7	R	1.732	1	2.7
Extrap. and Interpolation	1.0	R	1.732	1	0.6
Test Sample Related					
Device Positioning Vertical	4.7	R	1.732	1	2.7
Device Positioning Lateral	1.0	R	1.732	1	0.6
Device Holder and Phantom	2.4	R	1.732	1	1.4
Power Drift	5.0	R	1.732	1	2.9
Phantom and Setup Related					
Phantom Thickness	2.4	R	1.732	1	1.4
Combined Std. Uncertainty					16.4%
Coverage Factor for 95 %					K=2
Expanded STD Uncertainty					32.7%

Table 14.1 Uncertainty Budget of HAC free field assessment

15. References

[1] ANSI C63.19-2011, “American National Standard for Methods of Measurement of Compatibility between Wireless Communications Devices and Hearing Aids”, 27 May 2011.

[2] FCC KDB 285076 D01v06r02, “Equipment Authorization Guidance for Hearing Aid Compatibility”, September 19, 2022

[3] FCC KDB 285076 D03v01r06, “Hearing aid compatibility frequently asked questions”, July 20, 2022.

[4] SPEAG DASY System Handbook

------THE END------