HEARING AID COMPATIBILITY RF EMISSIONS TEST REPORT

FCC ID	**: IHDT56AN2**
Equipment	**: Mobile Cellular Phone**
Brand Name	**: Motorola**
Model Name	**: XT2347-2**
M-Rating	**: M3**
Applicant	**: Motorola Mobility LLC 222 W,Merchandise Mart Plaza, Chicago IL 60654 USA**
Manufacturer	**: Motorola Mobility LLC 222 W,Merchandise Mart Plaza, Chicago IL 60654 USA**
Standard	**: FCC 47 CFR §20.19 ANSI C63.19-2011**

We, Sporton International Inc. (Shenzhen), would like to declare that the tested sample has been evaluated in accordance with the test procedures and has been in compliance with the applicable technical standards.

The test results in this report apply exclusively to the tested model / sample. Without written approval of Sporton International Inc. (Shenzhen), the test report shall not be reproduced except in full.

Si Zhang

Approved by: Si Zhang

ACCREDITED
Cert #5145.01

Sporton International Inc. (Shenzhen)
1/F, 2/F, Bldg 5, Shiling Industrial Zone, Xinwei Village, Xili, Nanshan, Shenzhen, 518055
People's Republic of China

Table of Contents

1. General Information 4
2. Testing Location 5
3. Applied Standards 5
4. RF Audio Interference Level 5
5. Air Interface and Operating Mode 6
6. Measurement System Specification 7
   6.1 E-Field Probe System 7
   6.2 Data Storage and Evaluation 8
7. RF Emissions Test Procedure 9
8. Test Equipment List 12
9. Measurement System Validation 13
10. Modulation Interference Factor 14
11. Low-power Exemption 15
12. Conducted RF Output Power (Unit: dBm) 20
13. HAC RF Emission Test Results 22
14. Uncertainty Assessment 23
15. References 25

Appendix A. Plots of System Performance Check
Appendix B. Plots of RF Emission Measurement
Appendix C. DASY Calibration Certificate
Appendix D. Test Setup Photos
Appendix E. UID specifications for HAC RFE

History of this test report

Report No.	Version	Description	Issued Date
HA352602-01A	Rev. 01	Initial issue of report	Jul. 26, 2023

1. General Information

Product Feature & Specification	
Applicant Name	Motorola Mobility LLC
Equipment Name	Mobile Cellular Phone
Brand Name	Motorola
Model Name	XT2347-2
IMEI Code	IMEI 1: 350162390019770 IMEI 2: 350162390019788
FCC ID	IHDT56AN2
HW	DVT2
SW	T3TC33.12
EUT Stage	Identical Prototype
Date Tested	2023/6/15 ~ 2023/7/2
Frequency Band	GSM850: 824 MHz ~ 849 MHz GSM1900: 1850 MHz ~ 1910 MHz WCDMA Band II: 1850 MHz ~ 1910 MHz WCDMA Band V: 824 MHz ~ 849 MHz LTE Band 2: 1850 MHz ~ 1910 MHz LTE Band 5: 824 MHz ~ 849 MHz LTE Band 7: 2500 MHz ~ 2570 MHz LTE Band 26: 814 MHz ~ 849 MHz LTE Band 38: 2570 MHz ~ 2620 MHz LTE Band 41: 2496 MHz ~ 2690 MHz LTE Band 42: 3450 MHz ~3550 MHz 5G NR n5: 824 MHz ~ 849 MHz 5G NR n7: 2500 MHz ~ 2570 MHz 5G NR n26 : 814 MHz ~ 849 MHz 5G NR n38 : 2570 MHz ~ 2620 MHz 5G NR n41 : 2496 MHz ~ 2690 MHz 5G NR n77: 3700 MHz ~ 3980 MHz 5G NR n78: 3700 MHz ~ 3800 MHz WLAN 2.4GHz Band: 2412 MHz ~ 2462 MHz WLAN 5.2GHz Band: 5180 MHz ~ 5240 MHz WLAN 5.3GHz Band: 5260 MHz ~ 5320 MHz WLAN 5.5GHz Band: 5500 MHz ~ 5720 MHz WLAN 5.8GHz Band: 5745 MHz ~ 5825 MHz Bluetooth: 2402 MHz ~ 2480 MHz NFC: 13.56 MHz
Mode	GSM/GPRS/EGPRS RMC/AMR 12.2Kbps HSDPA HSUPA HSPA+(16QAM uplink is supported) LTE: QPSK, 16QAM, 64QAM, 256QAM 5G NR : CP-OFDM / DFT-s-OFDM, PI/2 BPSK, QPSK, 16QAM, 64QAM, 256QAM WLAN 2.4GHz 802.11b/g/n HT20/HT40 WLAN 2.4GHz 802.11ac VHT20/VHT40 WLAN 5GHz 802.11a/n HT20/HT40 WLAN 5GHz 802.11ac VHT20/VHT40/VHT80 Bluetooth BR/EDR/LE NFC: ASK

2. Testing Location

Sporton International Inc. (Shenzhen) is accredited to ISO/IEC 17025:2017 by American Association for Laboratory Accreditation with Certificate Number 5145.01.

Testing Laboratory			
Test Firm	Sporton International Inc. (Shenzhen)		
Test Site Location	1/F, 2/F, Bldg 5, Shiling Industrial Zone, Xinwei Village, Xili, Nanshan, Shenzhen, 518055 People's Republic of China TEL: +86-755-86379589 FAX: +86-755-86379595		
Test Site No.	Sporton Site No.	FCC Designation No.	FCC Test Firm Registration No.
	SAR01-SZ	CN1256	421272

3. Applied Standards

- FCC CFR47 Part 20.19
- ANSI C63.19-2011
- FCC KDB 285076 D01 HAC Guidance v06r02
- FCC KDB 285076 D03 HAC FAQ v01r06

4. RF Audio Interference Level

FCC wireless hearing aid compatibility rules ensure that consumers with hearing loss are able to access wireless communications services through a wide selection of handsets without experiencing disabling radio frequency (RF) interference or other technical obstacles.
To define and measure the hearing aid compatibility of handsets, in CFR47 part 20.19 ANSI C63.19 is referenced. A handset is considered hearing aid-compatible for acoustic coupling if it meets a rating of at least M3 under ANSI C63.19, and A handset is considered hearing aid compatible for inductive coupling if it meets a rating of at least T3. According to ANSI C63.19 2011 version, for acoustic coupling, the RF electric field emissions of wireless communication devices should be measured and rated according to the emission level as below.

Emission Categories	E-field emissions	
	<960Mhz	>960Mhz
M1	50 to 55 dB (V/m)	40 to 45 dB (V/m)
M2	45 to 50 dB (V/m)	35 to 40 dB (V/m)
M3	40 to 45 dB (V/m)	30 to 35 dB (V/m)
M4	<40 dB (V/m)	<30 dB (V/m)

Table 4.1 Telephone near-field categories in linear units

5. Air Interface and Operating Mode

Air Interface	Band MHz	Type	C63.19 Tested	Simultaneous Transmitter	Name of Voice Service	Power Reduction
GSM	GSM850	VO	Yes	WLAN, BT	CMRS Voice	No
	GSM1900			WLAN, BT		No
	EDGE850	VD	Yes	WLAN, BT	Google Meet	No
	EDGE1900			WLAN, BT		
WCDMA	Band II	VO	No(1)	WLAN, BT	CMRS Voice	No
	Band V			WLAN, BT		No
	HSPA	VD	No(1)	WLAN, BT	Google Meet	No
LTE (FDD)	Band 2	VD	No(1)	5G NR, WLAN, BT	VoLTE / Google Meet	No
	Band 5			5G NR, WLAN, BT		No
	Band 7			5G NR, WLAN, BT		No
	Band 26			5G NR, WLAN, BT		No
LTE (TDD)	Band 38	VD	Yes	5G NR, WLAN, BT	VoLTE / Google Meet	No
	Band 41			5G NR, WLAN, BT		No
	Band 42			5G NR, WLAN, BT		No
5G NR (FDD)	n5	VD	No(1)	LTE, WLAN, BT	VoNR / Google Meet	No
	n7			LTE, WLAN, BT		No
	n26			LTE, WLAN, BT		No
5G NR (TDD)	n38	VD	No(1)	LTE, WLAN, BT	VoNR / Google Meet	No
	n41		No(1)	LTE, WLAN, BT		No
	n77			LTE, WLAN, BT		No
	n78			LTE, WLAN, BT		No
Wi-Fi	2450	VD	Yes	GSM,WCDMA,LTE,5G NR	VoWiFi / Google Meet	No
	5200	VD	No(1)	GSM,WCDMA,LTE,5G NR		No
	5300			GSM,WCDMA,LTE,5G NR		No
	5500			GSM,WCDMA,LTE,5G NR		No
	5800			GSM,WCDMA,LTE,5G NR		No
BT	2450	DT	No	GSM,WCDMA,LTE,5G NR	NA	No

Type Transport:
VO= Voice only
DT= Digital Transport only (no voice)
VD= CMRS and IP Voice Service over Digital Transport

Remark:
1. The air interface is exempted from testing by low power exemption that its average antenna input power plus its MIF is ≤17 dBm, and is rated as M4.
2. The device have similar frequency in some LTE bands: LTE B38/41, , since the supported frequency spans for the smaller LTE bands are completely cover by the larger LTE bands, therefore, only larger LTE bands were required to be tested for hearing-aid compliance.
3. There are two samples, the different between them refer to the XT2347-2_Operational Description of Product Equality Declaration which is exhibit separately. According to the differences, so choose sample 1 to perform full testing and sample 2 to verify the worst case of sample 1.

6. Measurement System Specification

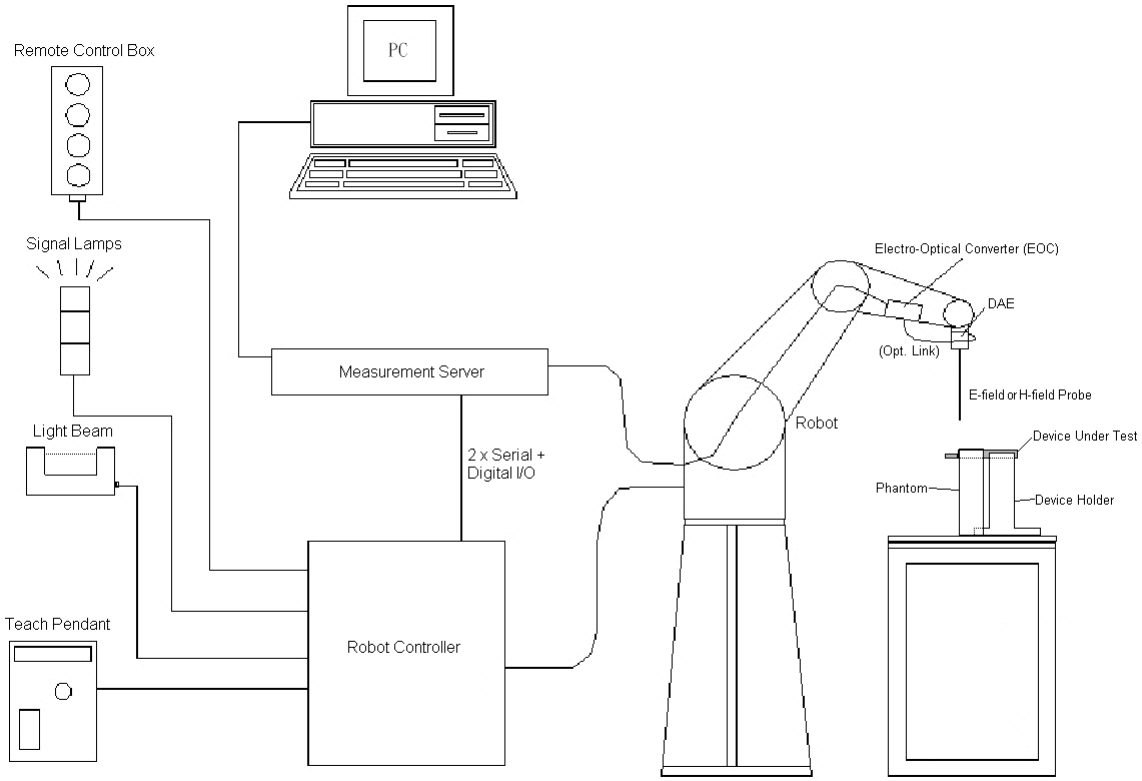

Fig 6.1 System Configurations

6.1 E-Field Probe System

E-Field Probe Specification
<EF3DV3>

Construction	One dipole parallel, two dipoles normal to probe axis Built-in shielding against static charges	 **Photo of E-field Probe**
Calibration	In air from 30 MHz to 6.0 GHz (absolute accuracy ±6.0%, k=2)	
Frequency	30 MHz to 6 GHz; Linearity: ± 2.0 dB (100 MHz to 3 GHz)	
Directivity	± 0.2 dB in air (rotation around probe axis) ± 0.4 dB in air (rotation normal to probe axis)	
Dynamic Range	2 V/m to 1000 V/m (M3 or better device readings fall well below diode compression point)	
Linearity	± 0.2 dB	
Dimensions	Overall length: 337 mm (Tip: 20 mm) Tip diameter: 4 mm (Body: 12 mm) Distance from probe tip to dipole centers: 1.5 mm	

Probe Tip Description:
HAC field measurements take place in the close near field with high gradients. Increasing the measuring distance from the source will generally decrease the measured field values (in case of the validation dipole approx. 10%per mm).

6.2 Data Storage and Evaluation

The DASY software stores the assessed data from the data acquisition electronics as raw data (in microvolt readings from the probe sensors), together with all the necessary software parameters for the data evaluation (probe calibration data, and device frequency and modulation data) in measurement files.

Probe parameters :	- Sensitivity	$Norm_i$, a_{i0}, a_{i1}, a_{i2}
	- Conversion factor	$ConvF_i$
	- Diode compression point	dcp_i
Device parameters :	- Frequency	f
	- Crest factor	cf
Media parameters :	- Conductivity	σ
	- Density	ρ

The formula for each channel can be given as :

$$\mathbf{V_i = U_i + U_i^2 \cdot \frac{cf}{dcp_i}}$$

with V_i = compensated signal of channel i, (i = x, y, z)
U_i = input signal of channel i, (i = x, y, z)
cf = crest factor of exciting field (DASY parameter)
dcp_i = diode compression point (DASY parameter)

From the compensated input signals, the primary field data for each channel can be evaluated :

E-field Probes : $\mathbf{E_i = \sqrt{\frac{V_i}{Norm_i \cdot ConvF}}}$

with V_i = compensated signal of channel i, (i = x, y, z)
$Norm_i$ = sensor sensitivity of channel i, (i = x, y, z), μV/(V/m)^2 for E-field Probes
ConvF = sensitivity enhancement in solution
f = carrier frequency [GHz]
E_i = electric field strength of channel i in V/m

The RSS value of the field components gives the total field strength (Hermitian magnitude) :

$$\mathbf{E_{tot} = \sqrt{E_x^2 + E_y^2 + E_z^2}}$$

The primary field data are used to calculate the derived field units.

7. RF Emissions Test Procedure

Referenced from ANSI C63.19 -2011 section 5.5.1

a. Confirm the proper operation of the field probe, probe measurement system, and other instrumentation and the positioning system.
b. Position the WD in its intended test position.
c. Set the WD to transmit a fixed and repeatable combination of signal power and modulation characteristic that is representative of the worst case (highest interference potential) encountered in normal use. Transiently occurring start-up, changeover, or termination conditions, or other operations likely to occur less than 1% of the time during normal operation, may be excluded from consideration.
d. The center sub-grid shall be centered on the T-Coil mode perpendicular measurement point or the acoustic output, as appropriate. Locate the field probe at the initial test position in the 50 mm by 50 mm grid, which is contained in the measurement plane, refer to illustrated in Figure 8.2. If the field alignment method is used, align the probe for maximum field reception.
e. Record the reading at the output of the measurement system.
f. Scan the entire 50 mm by 50 mm region in equality spaced increments and record the reading at each measurement point, The distance between measurement points shall be sufficient to assure the identification of the maximum reading.
g. Identify the five contiguous sub-grids around the center sub-grid whose maximum reading is the lowest of all available choices. This eliminates the three sub-grids with the maximum readings. Thus, the six areas to be used to determine the WD's highest emissions are identified.
h. Identify the maximum reading within the non-excluded sub-grids identified in step g).
i. Indirect measurement method
j. The RF audio interference level in dB (V/m) is obtained by adding the MIF (in dB) to the maximum steady-state rms field-strength reading, in dB (V/m)
k. Compare this RF audio interference level with the categories in ANSI C63.19-2011 clause 8 and record the resulting WD category rating.
l. For the T-Coil perpendicular measurement location is ≥5.0 mm from the center of the acoustic output, then two different 50 mm by 50 mm areas may need to be scanned, the first for the microphone mode assessment and the second for the T-Coil assessment.
m. The second for the T-Coil assessment, with the grid shifted so that it is centered on the perpendicular measurement point. Record the WD category rating.

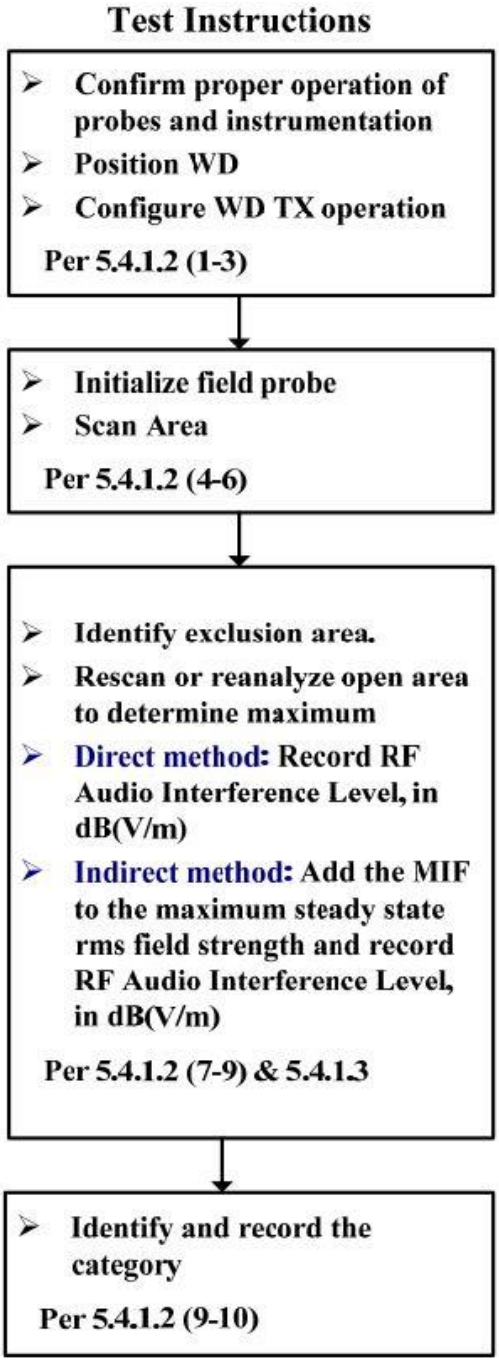

Figure 8.1 RF Emissions Flow Chart

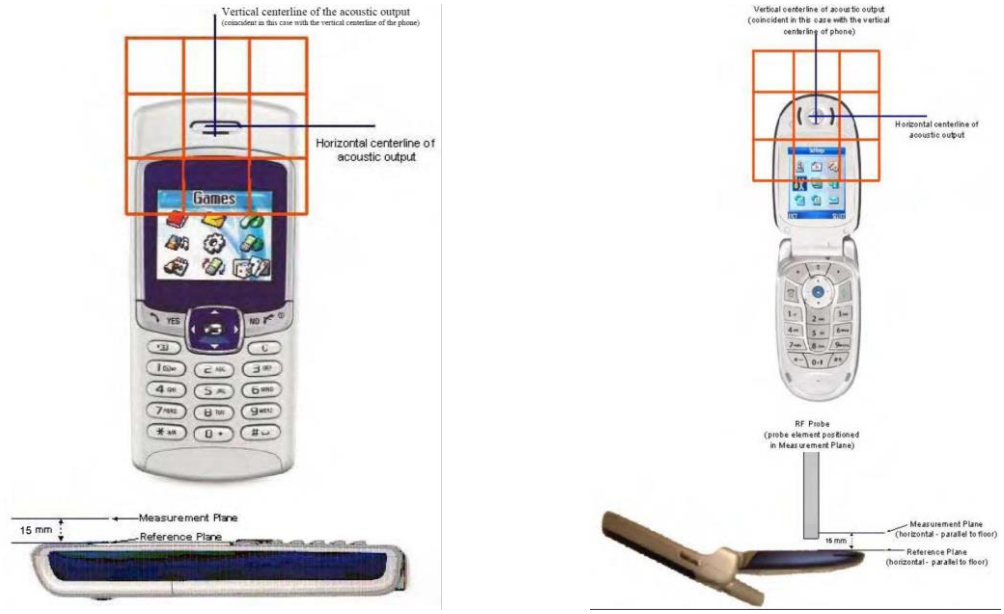

Fig 8.2 EUT reference and plane for HAC RF emission measurements

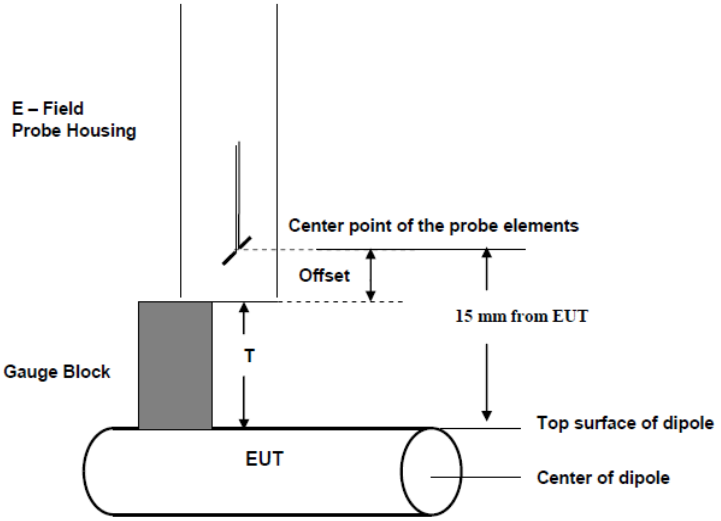

Fig. 8.3 Gauge block with E-field probe

8. Test Equipment List

Manufacturer	Name of Equipment	Type/Model	Serial Number	Calibration	
				Last Cal.	Due Date
SPEAG	835MHz Calibration Dipole	CD835V3	1171	Mar. 01, 2022	Feb. 28, 2025
SPEAG	1880MHz Calibration Dipole	CD1880V3	1155	Mar. 01, 2022	Feb. 28, 2025
SPEAG	2450MHz Calibration Dipole	CD2450V3	1158	Sep. 26, 2022	Sep. 25, 2023
SPEAG	2600Mhz Calibration Dipole	CD2600V3	1010	Apr. 20, 2022	Apr. 19, 2025
SPEAG	3500Mhz Calibration Dipole	CD3500V3	1009	Mar. 22, 2023	Mar. 21, 2024
SPEAG	Data Acquisition Electronics	DAE4	1311	Aug. 25, 2022	Aug. 24, 2023
SPEAG	Isotropic E-Field Probe	EF3DV3	4053	Jul. 27, 2022	Jul. 26, 2023
SPEAG	Audio Magnetic Calibration Coil	AMCC	1128	NCR	NCR
SPEAG	Audio Measuring Instrument	AMMI	1137	NCR	NCR
R&S	Base Station(Measure)	CMU200	108440	Dec. 27, 2022	Dec. 26, 2023
R&S	Base Station(Measure)	CMW500	157651	Jan. 04, 2023	Jan. 03, 2024
Anritsu	Radio communication analyzer	MT8820C	6201300653	Jul. 07, 2022	Jul. 06, 2023
Agilent	Signal Generator	N5181A	MY50145381	Dec. 27, 2022	Dec. 26, 2023
AR	Amplifier	5S1G4	0333096	NCR	NCR
mini-circuits	Amplifier	ZVE-3W-83+	599201528	NCR	NCR
Agilent	Dual Directional Coupler	778D	50422	NCR	NCR
ET Industries	Dual Directional Coupler	C-058-10	N/A	NCR	NCR
ARRA	Power Divider	A3200-2	N/A	NCR	NCR
SPEAG	Device Holder	N/A	N/A	NCR	NCR
Anritsu	Power Sensor	MA2411B	1306099	Oct. 17, 2022	Oct. 16, 2023
Anritsu	Power Meter	ML2495A	1349001	Oct. 17, 2022	Oct. 16, 2023
Anritsu	Power Sensor	MA2411B	1542004	Dec. 27, 2022	Dec. 26, 2023
Weinschel	Attenuator 1	3M-10	N/A	NCR	NCR
Weinschel	Attenuator 2	3M-20	N/A	NCR	NCR
Woken	Attenuator 3	WK0602-XX	N/A	NCR	NCR
R&S	Spectrum Analyzer	FSP7	100818	Jul. 07, 2022	Jul. 06, 2023
Anymetre	Thermo-Hygrometer	JR593	2015030904	Jul. 12, 2022	Jul. 11, 2023
SPEAG	Test Arch Phantom	N/A	N/A	NCR	NCR
SPEAG	Phone Positioner	N/A	N/A	NCR	NCR

Note:
1. NCR: “No-Calibration Required”
2. Referring to KDB 865664 D01v01r04, the dipole calibration interval can be extended to 3 years with justification. The dipoles are also not physically damaged, or repaired during the interval.
3. The justification data of dipole can be found in appendix C. The return loss is < -20dB, within 20% of prior calibration, the impedance is within 5 ohm of prior calibration.

9. Measurement System Validation

Each DASY system is equipped with one or more system validation kits. These units, together with the predefined measurement procedures within the DASY software, enable the user to conduct the system performance check and system validation. System validation kit includes a dipole, tripod holder to fix it underneath the test Arch and a corresponding distance holder.
The system performance check verifies that the system operates within its specifications. System and operator errors can be detected and corrected. It is recommended that the system performance check be performed prior to any usage of the system in order to guarantee reproducible results. The system performance check uses normal HAC measurements in a simplified setup with a well characterized source. This setup was selected to give a high sensitivity to all parameters that might fail or vary over time. The system check does not intend to replace the calibration of the components, but indicates situations where the system uncertainty is exceeded due to drift or failure.

<Test Setup>

1. In the simplified setup for system evaluation, the EUT is replaced by a calibrated dipole and the power source is replaced by a continuous wave which comes from a signal generator.
2. The center point of the probe element(s) is 15mm from the closest surface of the dipole elements.
3. The calibrated dipole must be placed beneath the arch phantom. The equipment setup is shown below:
4. The output power on dipole port must be calibrated to 20dBm (100mW) before dipole is connected.

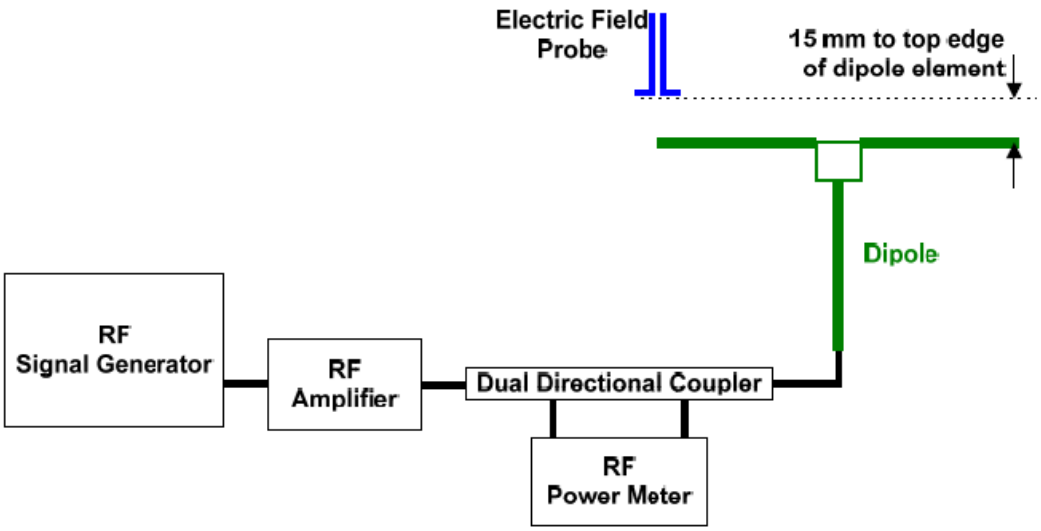

Fig. 7.1 Setup Diagram

<Validation Results>

Comparing to the original E-field value provided by SPEAG, the verification data should be within its specification of 18 %. Table 6.1 shows the target value and measured value. The table below indicates the system performance check can meet the variation criterion and the plots can be referred to appendix A of this report.
Deviation = ((Average E-field Value) - (Target value)) / (Target value) * 100%

Frequency (MHz)	Input Power (dBm)	Target Value (V/m)	E-Field 1 (V/m)	E-Field 2 (V/m)	Average Value (V/m)	Deviation (%)	Date
835	20	107.7	119.2	111.4	115.3	7.06	2023/6/15
1880	20	85.1	97.48	92.22	94.85	11.46	2023/6/15
2450	20	84.9	91.22	88.18	89.7	5.65	2023/7/2
2600	20	82.9	87.59	88.37	87.98	6.13	2023/6/25
3500	20	84	88.77	88.19	88.48	5.33	2023/6/15

10. Modulation Interference Factor

The HAC Standard ANSI C63.19-2011 defines a new scaling using the Modulation Interference Factor (MIF). For any specific fixed and repeatable modulated signal, a modulation interference factor (MIF, expressed in dB) may be developed that relates its interference potential to its steady-state rms signal level or average power level. This factor is a function only of the audio-frequency amplitude modulation characteristics of the signal and is the same for field-strength and conducted power measurements. It is important to emphasize that the MIF is valid only for a specific repeatable audio-frequency amplitude modulation characteristic. Any change in modulation characteristic requires determination and application of a new MIF

The Modulation Interference factor (MIF, in dB) is added to the measured average E-field (in dBV/m) and converts it to the RF Audio Interference level (in dBV/m). This level considers the audible amplitude modulation components in the RF E-field. CW fields without amplitude modulation are assumed to not interfere with the hearing aid electronics. Modulations without time slots and low fluctuations at low frequencies have low MIF values, TDMA modulations with narrow transmission and repetition rates of few 100 Hz have high MIF values and give similar classifications as ANSI C63.19-2011.

ER3D, EF3D and EU2D E-field probes have a bandwidth <10 kHz and can therefore not evaluate the RF envelope in the full audio band. DASY52 is therefore using the indirect measurement method according to ANSI C63.19-2011 which is the primary method. These near field probes read the averaged E-field measurement. Especially for the new high peak-to-average (PAR) signal types, the probes shall be linearized by PMR calibration in order to not overestimate the field reading. Probe Modulation Response (PMR) calibration linearizes the probe response over its dynamic range for specific modulations which are characterized by their UID and result in an uncertainty specified in the probe calibration certificate. The MIF is characteristic for a given waveform envelope and can be used as a constant conversion factor if the probe has been PMR calibrated.

The evaluation method for the MIF is defined in ANSI C63.19-2011 section D.7. An RMS demodulated RF signal is fed to a spectral filter (similar to an A weighting filter) and forwarded to a temporal filter acting as a quasi-peak detector. The averaged output of these filtering is scaled to a 1 kHz 80% AM signal as reference. MIF measurement requires additional instrumentation and is not well suited for evaluation by the end user with reasonable uncertainty. It may alliteratively be determined through analysis and simulation, because it is constant and characteristic for a communication signal. DASY52 uses well-defined signals for PMR calibration. The MIF of these signals has been determined by simulation and it is automatically applied.

The MIF measurement uncertainty is estimated as follows, declared by HAC equipment provider SPEAG, for modulation frequencies from slotted waveforms with fundamental frequency and at least 2 harmonics within 10 kHz:

1. 0.2 dB for MIF: -7 to +5 dB
2. 0.5 dB for MIF: -13 to +11 dB
3. 1 dB for MIF: > -20 dB

MIF values applied in this test report were provided by the HAC equipment provider of SPEAG, and the worst values for all air interface are listed below to be determine the Low-power Exemption.

UID	Communication System Name	MIF(dB)
10021	GSM-FDD(TDMA,GMSK)	3.63
10025	EDGE-FDD (TDMA, 8PSK, TN 0)	3.75
10460	UMTS-FDD(WCDMA, AMR)	-25.43
10225	UMTS-FDD (HSPA+)	-20.39
10170	LTE-FDD(SC-FDMA,1RB,20MHz,16-QAM)	-9.76
10173	LTE-TDD (SC-FDMA, 1 RB, 20 MHz, 16-QAM)	-1.44
10769	5G NR (CP-OFDM, 1 RB, 15 MHz, QPSK, 15 kHz)	-12.08
10061	IEEE 802.11b WiFi 2.4 GHz (DSSS, 11 Mbps)	-2.02
10077	IEEE 802.11g WiFi 2.4 GHz (DSSS/OFDM, 54 Mbps)	0.12
10427	IEEE 802.11n (HT Greeneld, 150 Mbps, 64-QAM)	-13.44
10069	IEEE 802.11a/h WiFi 5 GHz (OFDM, 54 Mbps)	-3.15
10616	IEEE 802.11ac WiFi (40MHz, MCS0, 90pc duty cycle)	-5.57
10671	IEEE 802.11ax (20MHz, MCS0, 90pc duty cycle)	-5.58

11. Low-power Exemption

<Max Tune-up Limit>
<Ant 0>

Frequency Band		Average Power (dBm)
GSM	GSM850	33.50
	EDGE850	27.00
	GSM1900	30.50
	EDGE1900	26.50
WCDMA	Band V	24.00
	Band II	24.00
	HSPA+	20.50
FDD LTE	Band 2	24.00
	Band 5	24.00
	Band 26	24.00
5G NR FDD	n5	24.00
	n26	24.00

<Ant 1>

Frequency Band		Average Power (dBm)
FDD LTE	Band 7	24.00
TDD LTE	Band 38	24.00
	Band 41	24.00
5G NR FDD	n7	24.00
5G NR TDD	n77	18.50
	n77_HPUE	21.50
	n78	20.00
	n78_HPUE	23.00

<Ant 2>

Frequency Band		Average Power (dBm)
5G NR TDD	n77	18.50
	n77_HPUE	21.50
	n78	22.00
	n78_HPUE	25.00

<Ant 4>

Frequency Band		Average Power (dBm)
FDD LTE	Band 2	24.00
	Band 5	24.00
	Band 26	24.00
TDD LTE	Band 38	24.00
	Band 41	24.00
	Band 41_HPUE	27.00
5G NR FDD	n5	24.00
	n7	24.00
	n26	24.00
5G NR TDD	n38	24.00
	n41	24.00

<Ant 5>

Frequency Band		Average Power (dBm)
TDD LTE	Band 42	24.00
5G NR TDD	n77	24.00
	n77_HPUE	27.00
	n78	24.00
	n78_HPUE	27.00

<Ant 8>

Frequency Band		Average Power (dBm)
5G NR TDD	n77	24.00
	n77_HPUE	26.00
	n78	23.00
	n78_HPUE	26.00

<WLAN>

Frequency Band		Average Power (dBm)
2.4GHz WLAN	802.11b	21.00
	802.11g	20.00
	802.11n-HT20	20.00
	802.11n-HT40	18.00
	802.11ac-VHT20	20.00
	802.11ac-VHT40	18.00
5GHz WLAN	802.11a	20.00
	802.11n-HT20	20.00
	802.11n-HT40	18.50
	802.11ac-VHT20	20.00
	802.11ac-VHT40	18.50
	802.11ac-VHT80	18.50

<Low Power Exemption>

<Ant 0>

Air Interface	Max Average Antenna Input Power (dBm)	Worst Case MIF (dB)	Power + MIF(dB)	C63.19 test required
GSM850	33.50	3.63	37.13	Yes
EDGE850	27.00	3.75	30.75	No(1)
GSM1900	30.50	3.63	34.13	Yes
EDGE1900	26.50	3.75	30.25	No(1)
WCDMA	24.00	-25.43	-1.43	No
WCDMA - HSPA	24.00	-20.39	3.61	No
LTE - FDD	24.00	-9.76	14.24	No
5G FR1 - FDD	24.00	-12.08	11.92	No

<Ant 1>

Air Interface	Max Average Antenna Input Power (dBm)	Worst Case MIF (dB)	Power + MIF(dB)	C63.19 test required
LTE - FDD	24.00	-9.76	14.24	No
LTE – TDD	24.00	-1.44	22.56	Yes
5G FR1 - FDD	24.00	-12.08	11.92	No
5G NR - TDD	23.00	-12.08	10.92	No

<Ant 2>

Air Interface	Max Average Antenna Input Power (dBm)	Worst Case MIF (dB)	Power + MIF(dB)	C63.19 test required
5G NR - TDD	25.00	-12.08	12.92	No

<Ant 4>

Air Interface	Max Average Antenna Input Power (dBm)	Worst Case MIF (dB)	Power + MIF(dB)	C63.19 test required
LTE - FDD	24.00	-9.76	14.24	No
LTE – TDD	27.00	-1.44	25.56	Yes
5G FR1 - FDD	24.00	-12.08	11.92	No
5G NR - TDD	24.00	-12.08	11.92	No

<Ant 5>

Air Interface	Max Average Antenna Input Power (dBm)	Worst Case MIF (dB)	Power + MIF(dB)	C63.19 test required
LTE – TDD	24.00	-1.44	22.56	Yes
5G NR - TDD	27.00	-12.08	14.92	No

<Ant 8>

Air Interface	Max Average Antenna Input Power (dBm)	Worst Case MIF (dB)	Power + MIF(dB)	C63.19 test required
5G NR - TDD	26.00	-12.08	13.92	No

<WLAN>

Air Interface	Max Average Antenna Input Power (dBm)	Worst Case MIF (dB)	Power + MIF(dB)	C63.19 test required
802.11b	21.00	-2.02	18.98	No(2)
802.11g	20.00	0.12	20.12	Yes
802.11n-HT20	20.00	-13.44	6.56	No
802.11n-HT40	18.00	-13.44	4.56	No
802.11ac-VHT20	20.00	-5.57	14.43	No
802.11ac-VHT40	18.00	-5.57	12.43	No
802.11a	20.00	-3.15	16.85	No
802.11n-HT20	20.00	-13.44	6.56	No
802.11n-HT40	18.50	-13.44	5.06	No
802.11ac-VHT20	20.00	-5.57	14.43	No
802.11ac-VHT40	18.50	-5.57	12.93	No
802.11ac-VHT80	18.50	-5.57	12.93	No

General Note:

1. EDGE data modes is not necessary due the GSM Voice mode is the worst case.
2. 802.11b is not necessary due to the 802.11g is the worst case.
3. According to ANSI C63.19 2011-version, for the air interface technology of a device is exempt from testing when its average antenna input power plus its MIF is ≤17 dBm for any of its operating modes.
4. HAC RF rating is M4 for the air interface which meets the low power exemption.

12. Conducted RF Output Power (Unit: dBm)

<GSM>

Band GSM850	Burst Average Power (dBm)		
TX Channel	128	189	251
Frequency (MHz)	824.2	836.4	848.8
GSM (GMSK, 1 Tx slot)	32.20	32.22	32.18

Band GSM1900	Burst Average Power (dBm)		
TX Channel	512	661	810
Frequency (MHz)	1850.2	1880	1909.8
GSM (GMSK, 1 Tx slot)	29.10	29.30	29.15

<LTE>

Band 38_Ant 1						
BW [MHz]	Modulation	RB Size	RB Offset	Power Low Ch. / Freq.	Power Middle Ch. / Freq.	Power High Ch. / Freq.
Channel				37850	38000	38150
Frequency (MHz)				2580	2595	2610
20	QPSK	1	0	22.52	22.59	22.45

Band 38_Ant 4						
BW [MHz]	Modulation	RB Size	RB Offset	Power Low Ch. / Freq.	Power Middle Ch. / Freq.	Power High Ch. / Freq.
Channel				37850	38000	38150
Frequency (MHz)				2580	2595	2610
20	QPSK	1	0	22.81	22.93	22.80

Band 41_Ant 1								
BW [MHz]	Modulation	RB Size	RB Offset	Power Low Ch. / Freq.	Power Low Middle Ch. / Freq.	Power Middle Ch. / Freq.	Power High Middle Ch. / Freq.	Power High Ch. / Freq.
Channel				39750	40185	40620	41055	41490
Frequency (MHz)				2506	2549.5	2593	2636.5	2680
20	QPSK	1	0	23.03	23.02	23.05	22.85	22.56

Band 41_Ant 4								
BW [MHz]	Modulation	RB Size	RB Offset	Power Low Ch. / Freq.	Power Low Middle Ch. / Freq.	Power Middle Ch. / Freq.	Power High Middle Ch. / Freq.	Power High Ch. / Freq.
Channel				39750	40185	40620	41055	41490
Frequency (MHz)				2506	2549.5	2593	2636.5	2680
20	QPSK	1	0	22.73	22.76	22.79	22.75	22.75

Band 41_Ant 4 HPUE								
BW [MHz]	Modulation	RB Size	RB Offset	Power Low Ch. / Freq.	Power Low Middle Ch. / Freq.	Power Middle Ch. / Freq.	Power High Middle Ch. / Freq.	Power High Ch. / Freq.
Channel				39750	40185	40620	41055	41490
Frequency (MHz)				2506	2549.5	2593	2636.5	2680
20	QPSK	1	0	25.45	25.61	25.84	25.60	25.68

Band 42_Ant 5						
BW [MHz]	Modulation	RB Size	RB Offset	Power Low Ch. / Freq.	Power Middle Ch. / Freq.	Power High Ch. / Freq.
Channel				43190	43340	43490
Frequency (MHz)				3560	3575	3590
20	QPSK	1	0	22.26	22.30	22.11

<WLAN>

2.4GHz WLAN	Mode	Channel	Frequency (MHz)	Average power (dBm)
	802.11g 6Mbps	1	2412	18.70
		6	2437	18.70
		11	2462	18.70

13. HAC RF Emission Test Results

Plot No.	Air Interface	BW (MHz)	Modulation / Mode	RB Size	RB offset	Channel	Sample	Transmit Ant.	Average Antenna Input Power (dBm)	MIF	E-Field (dBV/m)	Margin to FCC M3 limit (dB)	E-Field M Rating
01	GSM850	-	Voice	-	-	128	1	ANT0	32.2	3.63	36.97	8.03	M4
02	GSM850	-	Voice	-	-	189	1	ANT0	32.22	3.63	36.83	8.17	M4
03	GSM850	-	Voice	-	-	251	1	ANT0	32.18	3.63	36.82	8.18	M4
04	GSM1900	-	Voice	-	-	512	1	ANT0	29.1	3.63	27.71	7.29	M4
05	GSM1900	-	Voice	-	-	661	1	ANT0	29.3	3.63	27.78	7.22	M4
06	GSM1900	-	Voice	-	-	810	1	ANT0	29.15	3.63	27.86	7.14	M4
07	LTE Band 41	20M	QPSK	1	0	39750	1	ANT4	22.73	-1.44	32.96	2.04	M3
08	LTE Band 41	20M	QPSK	1	0	40185	1	ANT4	22.76	-1.44	33.87	1.13	M3
09	LTE Band 41	20M	QPSK	1	0	40620	1	ANT4	22.79	-1.44	34.03	0.97	M3
10	LTE Band 41	20M	QPSK	1	0	41055	1	ANT4	22.73	-1.44	34.00	1.00	M3
11	LTE Band 41	20M	QPSK	1	0	41490	1	ANT4	22.75	-1.44	34.06	0.94	M3
12	LTE Band 41_HPUE	20M	QPSK	1	0	39750	1	ANT4	25.45	-1.44	30.98	4.02	M3
13	LTE Band 41_HPUE	20M	QPSK	1	0	40185	1	ANT4	25.61	-1.44	32.00	3.00	M3
14	LTE Band 41_HPUE	20M	QPSK	1	0	40620	1	ANT4	25.84	-1.44	32.17	2.83	M3
15	LTE Band 41_HPUE	20M	QPSK	1	0	41055	1	ANT4	25.6	-1.44	32.23	2.77	M3
16	LTE Band 41_HPUE	20M	QPSK	1	0	41490	1	ANT4	25.68	-1.44	32.28	2.72	M3
17	LTE Band 41	20M	QPSK	1	0	39750	1	ANT1	23.03	-1.44	27.75	7.25	M4
18	LTE Band 41	20M	QPSK	1	0	40185	1	ANT1	23.02	-1.44	26.42	8.58	M4
19	LTE Band 41	20M	QPSK	1	0	40620	1	ANT1	23.05	-1.44	27.72	7.28	M4
20	LTE Band 41	20M	QPSK	1	0	41055	1	ANT1	22.8	-1.44	27.44	7.56	M4
21	LTE Band 41	20M	QPSK	1	0	41490	1	ANT1	22.56	-1.44	26.38	8.62	M4
22	LTE Band 42	20M	QPSK	1	0	42190	1	ANT5	22.26	-1.44	34.73	0.27	M3
22A	LTE Band 42	20M	QPSK	1	0	42190	2	ANT5	22.26	-1.44	31.22	3.78	M3
23	LTE Band 42	20M	QPSK	1	0	42590	1	ANT5	22.3	-1.44	34.61	0.39	M3
24	LTE Band 42	20M	QPSK	1	0	42990	1	ANT5	22.11	-1.44	34.11	0.89	M3
25	WLAN 2.4GHz	-	802.11g 6Mbps	-	-	1	1	ANT6	18.7	0.12	32.62	2.38	M3
26	WLAN 2.4GHz	-	802.11g 6Mbps	-	-	6	1	ANT6	18.7	0.12	32.48	2.52	M3
27	WLAN 2.4GHz	-	802.11g 6Mbps	-	-	11	1	ANT6	18.7	0.12	32.49	2.51	M3

Remark:

1. The HAC measurement system applies MIF value onto the measured RMS E-field, which is indirect method in ANSI C63.19 2011 version, and reports the RF audio interference level.
2. Phone Condition: Mute on; Backlight off; Max Volume

Test Engineer : Hank Huang, Kevin Xu, David Dai, Bin He

14. Uncertainty Assessment

The component of uncertainly may generally be categorized according to the methods used to evaluate them. The evaluation of uncertainly by the statistical analysis of a series of observations is termed a Type A evaluation of uncertainty. The evaluation of uncertainty by means other than the statistical analysis of a series of observation is termed a Type B evaluation of uncertainty. Each component of uncertainty, however evaluated, is represented by an estimated standard deviation, termed standard uncertainty, which is determined by the positive square root of the estimated variance.

The combined standard uncertainty of the measurement result represents the estimated standard deviation of the result. It is obtained by combining the individual standard uncertainties of both Type A and Type B evaluation using the usual “root-sum-squares” (RSS) methods of combining standard deviations by taking the positive square root of the estimated variances. Expanded uncertainty is a measure of uncertainty that defines an interval about the measurement result within which the measured value is confidently believed to lie. It is obtained by multiplying the combined standard uncertainty by a coverage factor. For purpose of this document, a coverage factor two is used, which corresponds to confidence interval of about 95 %. The DASY uncertainty Budget is showed in Table 14.1.

The judgment of conformity in the report is based on the measurement results excluding the measurement uncertainty.

Error Description	Uncertainty Value (±%)	Probability	Divisor	(Ci) E	Standard Uncertainty (E) (±%)
Measurement System					
Probe Calibration	5.1	N	1	1	5.1
Axial Isotropy	4.7	R	1.732	1	2.7
Sensor Displacement	16.5	R	1.732	1	9.5
Boundary Effects	2.4	R	1.732	1	1.4
Phantom Boundary Effect	7.2	R	1.732	1	4.2
Linearity	4.7	R	1.732	1	2.7
Scaling with PMR calibration	10.0	R	1.732	1	5.8
System Detection Limit	1.0	R	1.732	1	0.6
Readout Electronics	0.3	N	1	1	0.3
Response Time	2.6	R	1.732	1	1.5
Integration Time	2.6	R	1.732	1	1.5
RF Ambient Conditions	3.0	R	1.732	1	1.7
RF Reflections	12.0	R	1.732	1	6.9
Probe Positioner	1.2	R	1.732	1	0.7
Probe Positioning	4.7	R	1.732	1	2.7
Extrap. and Interpolation	1.0	R	1.732	1	0.6
Test Sample Related					
Device Positioning Vertical	4.7	R	1.732	1	2.7
Device Positioning Lateral	1.0	R	1.732	1	0.6
Device Holder and Phantom	2.4	R	1.732	1	1.4
Power Drift	5.0	R	1.732	1	2.9
Phantom and Setup Related					
Phantom Thickness	2.4	R	1.732	1	1.4
Combined Std. Uncertainty					16.4%
Coverage Factor for 95 %					K=2
Expanded STD Uncertainty					32.7%

Table 14.1 Uncertainty Budget of HAC free field assessment

15. References

[1] ANSI C63.19-2011, “American National Standard for Methods of Measurement of Compatibility between Wireless Communications Devices and Hearing Aids”, 27 May 2011.

[2] FCC KDB 285076 D01v06r02, “Equipment Authorization Guidance for Hearing Aid Compatibility”, September 19, 2022

[3] FCC KDB 285076 D03v01r06, “Hearing aid compatibility frequently asked questions”, July 20, 2022.

[4] SPEAG DASY System Handbook

------THE END------