In Collaboration with
TTL s p e a g
CALIBRATION LABORATORY

Add: No.52 HuaYuanBei Road, Haidian District, Beijing, 100191
Tel: +86-10-62304633-2117
E-mail: emf@caict.ac.cn http://www.caict.ac.cn

中国认可 国际互认 校准 CALIBRATION CNAS L0570

CAICT

Client **Sporton** **Certificate No: Z22-60301**

CALIBRATION CERTIFICATE

Object	D835V2 - SN: 4d091
Calibration Procedure(s)	FF-Z11-003-01 Calibration Procedures for dipole validation kits
Calibration date:	August 19, 2022

This calibration Certificate documents the traceability to national standards, which realize the physical units of measurements (SI). The measurements and the uncertainties with confidence probability are given on the following pages and are part of the certificate.

All calibrations have been conducted in the closed laboratory facility: environment temperature (22±3)°C and humidity<70%.

Calibration Equipment used (M&TE critical for calibration)

Primary Standards	ID #	Cal Date (Calibrated by, Certificate No.)	Scheduled Calibration
Power Meter NRP2	106277	24-Sep-21 (CTTL, No.J21X08326)	Sep-22
Power sensor NRP8S	104291	24-Sep-21 (CTTL, No.J21X08326)	Sep-22
Reference Probe EX3DV4	SN 7464	26-Jan-22(SPEAG,No.EX3-7464_Jan22)	Jan-23
DAE4	SN 1556	12-Jan-22(CTTL-SPEAG,No.Z22-60007)	Jan-23
Secondary Standards	**ID #**	**Cal Date (Calibrated by, Certificate No.)**	**Scheduled Calibration**
Signal Generator E4438C	MY49071430	13-Jan-22 (CTTL, No.J22X00409)	Jan-23
Network Analyzer E5071C	MY46110673	14-Jan-22 (CTTL, No.J22X00406)	Jan-23

	Name	Function	Signature
Calibrated by:	Zhao Jing	SAR Test Engineer	
Reviewed by:	Lin Hao	SAR Test Engineer	
Approved by:	Qi Dianyuan	SAR Project Leader	

Issued: August 23, 2022

This calibration certificate shall not be reproduced except in full without written approval of the laboratory.

In Collaboration with
s p e a g
CALIBRATION LABORATORY

Add: No.52 HuaYuanBei Road, Haidian District, Beijing, 100191, China
Tel: +86-10-62304633-2117
E-mail: emf@caict.ac.cn http://www.caict.ac.cn

Glossary:

TSL	tissue simulating liquid
ConvF	sensitivity in TSL / NORMx,y,z
N/A	not applicable or not measured

Calibration is Performed According to the Following Standards:

a) IEC/IEEE 62209-1528, "Measurement Procedure for The Assessment of Specific Absorption Rate of Human Exposure to Radio Frequency Fields from Hand-held and Body-mounted Wireless Communication Devices- Part 1528: Human Models, Instrumentation and Procedures (Frequency range of 4 MHz to 10 GHz)", October 2020

b) KDB 865664, "SAR Measurement Requirements for 100 MHz to 6 GHz"

Additional Documentation:

c) DASY4/5 System Handbook

Methods Applied and Interpretation of Parameters:

- *Measurement Conditions:* Further details are available from the Validation Report at the end of the certificate. All figures stated in the certificate are valid at the frequency indicated.
- *Antenna Parameters with TSL:* The dipole is mounted with the spacer to position its feed point exactly below the center marking of the flat phantom section, with the arms oriented parallel to the body axis.
- *Feed Point Impedance and Return Loss:* These parameters are measured with the dipole positioned under the liquid filled phantom. The impedance stated is transformed from the measurement at the SMA connector to the feed point. The Return Loss ensures low reflected power. No uncertainty required.
- *Electrical Delay:* One-way delay between the SMA connector and the antenna feed point. No uncertainty required.
- *SAR measured:* SAR measured at the stated antenna input power.
- *SAR normalized:* SAR as measured, normalized to an input power of 1 W at the antenna connector.
- *SAR for nominal TSL parameters:* The measured TSL parameters are used to calculate the nominal SAR result.

The reported uncertainty of measurement is stated as the standard uncertainty of Measurement multiplied by the coverage factor k=2, which for a normal distribution Corresponds to a coverage probability of approximately 95%.

In Collaboration with
s p e a g
CALIBRATION LABORATORY

Add: No.52 HuaYuanBei Road, Haidian District, Beijing, 100191, China
Tel: +86-10-62304633-2117
E-mail: emf@caict.ac.cn http://www.caict.ac.cn

Measurement Conditions

DASY system configuration, as far as not given on page 1.

DASY Version	DASY52	V52.10.4
Extrapolation	Advanced Extrapolation	
Phantom	Triple Flat Phantom 5.1C	
Distance Dipole Center - TSL	15 mm	with Spacer
Zoom Scan Resolution	dx, dy, dz = 5 mm	
Frequency	835 MHz ± 1 MHz	

Head TSL parameters

The following parameters and calculations were applied.

	Temperature	**Permittivity**	**Conductivity**
Nominal Head TSL parameters	22.0 ℃	41.5	0.90 mho/m
Measured Head TSL parameters	(22.0 ± 0.2) ℃	41.3 ± 6 %	0.92 mho/m ± 6 %
Head TSL temperature change during test	<1.0 ℃	----	----

SAR result with Head TSL

SAR averaged over 1 cm^3 (1 g) of Head TSL	Condition	
SAR measured	250 mW input power	2.41 W/kg
SAR for nominal Head TSL parameters	normalized to 1W	**9.45 W/kg ± 18.8 % (*k*=2)**
SAR averaged over 10 cm^3 (10 g) of Head TSL	Condition	
SAR measured	250 mW input power	1.58 W/kg
SAR for nominal Head TSL parameters	normalized to 1W	**6.22 W/kg ± 18.7 % (*k*=2)**

In Collaboration with
s p e a g
CALIBRATION LABORATORY

Add: No.52 HuaYuanBei Road, Haidian District, Beijing, 100191, China
Tel: +86-10-62304633-2117
E-mail: emf@caict.ac.cn http://www.caict.ac.cn

Appendix (Additional assessments outside the scope of CNAS L0570)

Antenna Parameters with Head TSL

Impedance, transformed to feed point	46.7Ω- 8.91jΩ
Return Loss	- 20.2dB

General Antenna Parameters and Design

Electrical Delay (one direction)	1.303 ns

After long term use with 100W radiated power, only a slight warming of the dipole near the feed-point can be measured.

The dipole is made of standard semirigid coaxial cable. The center conductor of the feeding line is directly connected to the second arm of the dipole. The antenna is therefore short-circuited for DC-signals. On some of the dipoles, small end caps are added to the dipole arms in order to improve matching when loaded according to the position as explained in the "Measurement Conditions" paragraph. The SAR data are not affected by this change. The overall dipole length is still according to the Standard.
No excessive force must be applied to the dipole arms, because they might bend or the soldered connections near the feed-point may be damaged.

Additional EUT Data

Manufactured by	SPEAG

In Collaboration with
s p e a g
CALIBRATION LABORATORY

Add: No.52 HuaYuanBei Road, Haidian District, Beijing, 100191, China
Tel: +86-10-62304633-2117
E-mail: emf@caict.ac.cn http://www.caict.ac.cn

DASY5 Validation Report for Head TSL Date: 2022-08-19

Test Laboratory: CTTL, Beijing, China

DUT: Dipole 835 MHz; Type: D835V2; Serial: D835V2 - SN: 4d091

Communication System: UID 0, CW; Frequency: 835 MHz; Duty Cycle: 1:1

Medium parameters used: f = 835 MHz; σ = 0.922 S/m; ε_r = 41.25; ρ = 1000 kg/m^3

Phantom section: Right Section

Measurement Standard: DASY5 (IEEE/IEC/ANSI C63.19-2007)

DASY5 Configuration:

- Probe: EX3DV4 - SN7464; ConvF(9.96, 9.96, 9.96) @ 835 MHz; Calibrated: 2022-01-26
- Sensor-Surface: 1.4mm (Mechanical Surface Detection)
- Electronics: DAE4 Sn1556; Calibrated: 2022-01-12
- Phantom: MFP_V5.1C (20deg probe tilt); Type: QD 000 P51 Cx; Serial: 1062
- DASY52 52.10.4(1535); SEMCAD X 14.6.14(7501)

Dipole Calibration/Zoom Scan (7x7x7) (7x7x7)/Cube 0: Measurement grid: dx=5mm, dy=5mm, dz=5mm

Reference Value = 56.54 V/m; Power Drift = 0.01 dB

Peak SAR (extrapolated) = 3.60 W/kg

SAR(1 g) = 2.41 W/kg; SAR(10 g) = 1.58 W/kg

Smallest distance from peaks to all points 3 dB below = 18.6 mm

Ratio of SAR at M2 to SAR at M1 = 67%

Maximum value of SAR (measured) = 3.20 W/kg

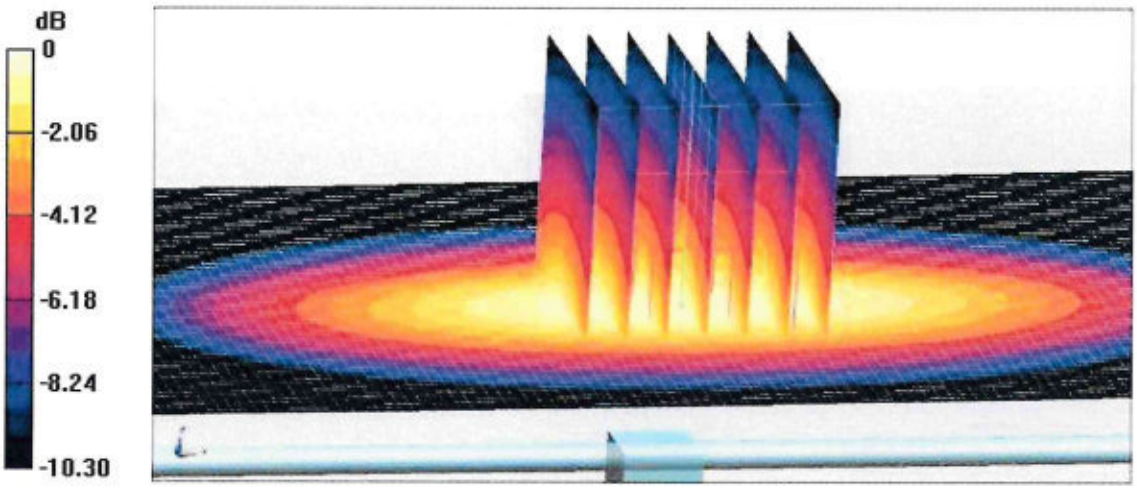

0 dB = 3.20 W/kg = 5.05 dBW/kg

In Collaboration with
s p e a g
CALIBRATION LABORATORY

Add: No.52 HuaYuanBei Road, Haidian District, Beijing, 100191, China
Tel: +86-10-62304633-2117
E-mail: emf@caict.ac.cn http://www.caict.ac.cn

Impedance Measurement Plot for Head TSL

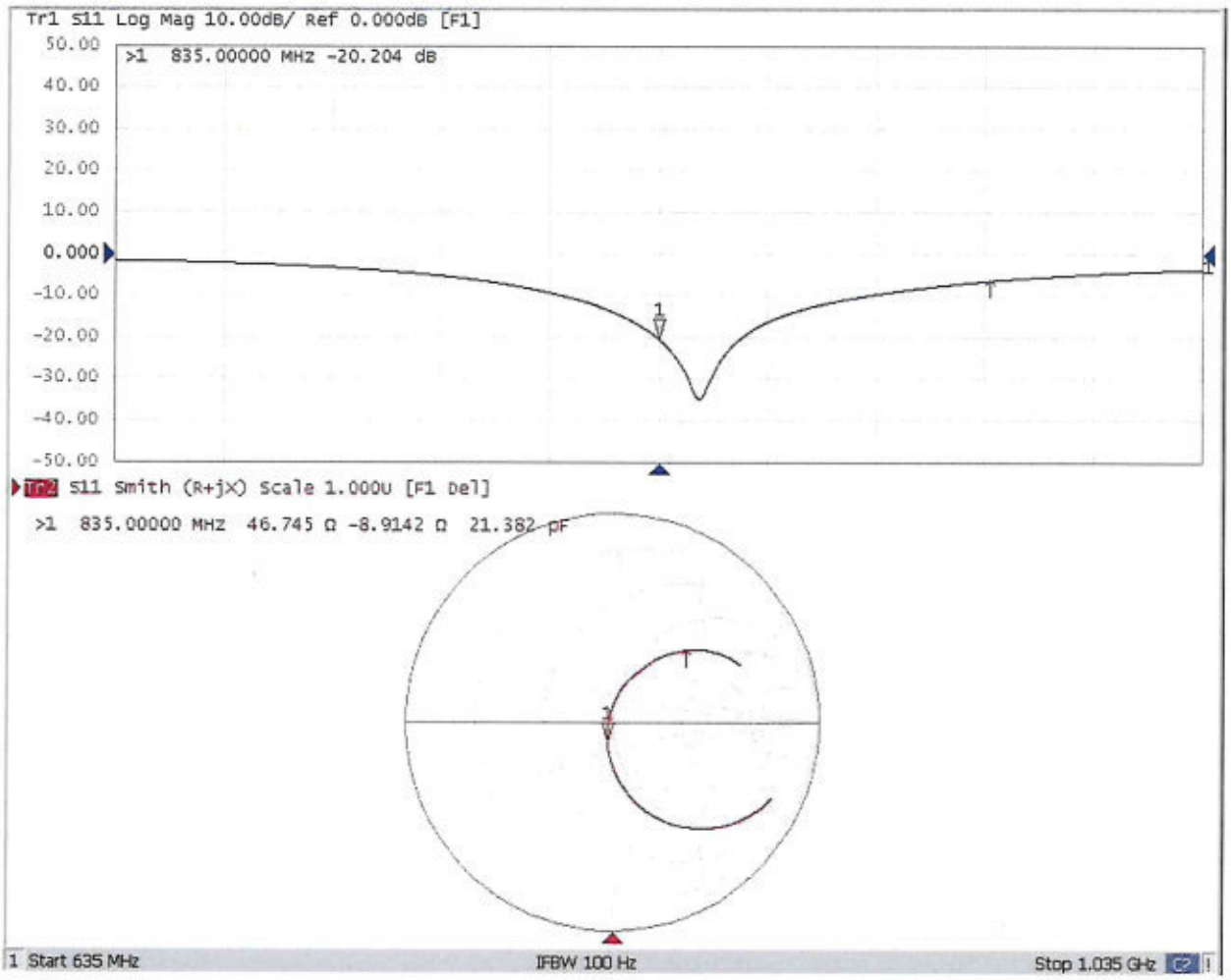

D835V2, Serial No. 4d091 Extended Dipole Calibrations

If dipoles are verified in return loss (<-20dB, within 20% of prior calibration),and in impedance (within 5 ohm of prior calibration), the annual calibration is not necessary and the calibration interval can be extended.

D835V2 – serial no. 4d091						
835 Head						
Date of Measurement	Return-Loss (dB)	Delta (%)	Real Impedance (ohm)	Delta (ohm)	Imaginary Impedance (ohm)	Delta (ohm)
2022.8.19	-20.204		46.745		-8.9142	
2023.8.18	-20.743	-2.6	48.115	-1.37	-9.0042	0.09

<Justification of the extended calibration>

The return loss is < -20dB, within 20% of prior calibration; the impedance is within 5 ohm of prior calibration. Therefore the verification result should support extended calibration.

Dipole Verification Data> D835V2, serial no. 4d091

835MHz – Head-2023.8.18

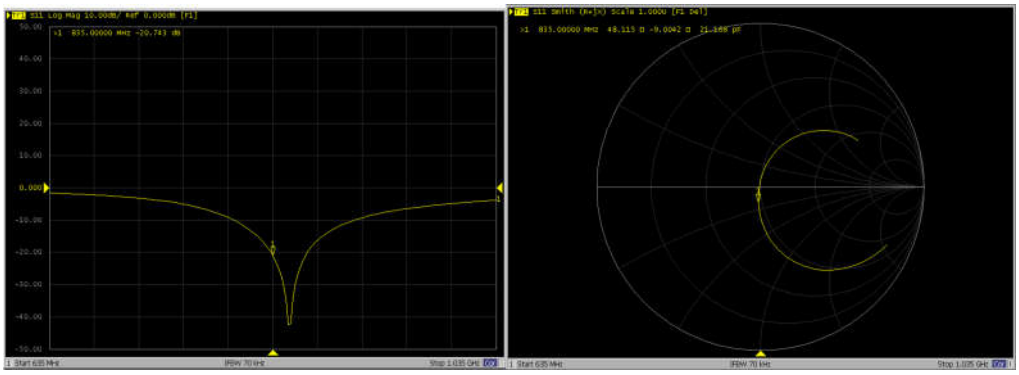

Calibration Laboratory of
Schmid & Partner
Engineering AG
Zeughausstrasse 43, 8004 Zurich, Switzerland

S Schweizerischer Kalibrierdienst
C Service suisse d'étalonnage
Servizio svizzero di taratura
S Swiss Calibration Service

Accredited by the Swiss Accreditation Service (SAS)
The Swiss Accreditation Service is one of the signatories to the EA Multilateral Agreement for the recognition of calibration certificates

Accreditation No.: SCS 0108

Client **Sporton**

Certificate No: D1900V2-5d118_Mar22

CALIBRATION CERTIFICATE

Object	D1900V2 - SN:5d118
Calibration procedure(s)	QA CAL-05.v11 Calibration Procedure for SAR Validation Sources between 0.7-3 GHz
Calibration date:	March 30, 2022

This calibration certificate documents the traceability to national standards, which realize the physical units of measurements (SI). The measurements and the uncertainties with confidence probability are given on the following pages and are part of the certificate.

All calibrations have been conducted in the closed laboratory facility: environment temperature (22 ± 3)°C and humidity < 70%.

Calibration Equipment used (M&TE critical for calibration)

Primary Standards	ID #	Cal Date (Certificate No.)	Scheduled Calibration
Power meter NRP	SN: 104778	09-Apr-21 (No. 217-03291/03292)	Apr-22
Power sensor NRP-Z91	SN: 103244	09-Apr-21 (No. 217-03291)	Apr-22
Power sensor NRP-Z91	SN: 103245	09-Apr-21 (No. 217-03292)	Apr-22
Reference 20 dB Attenuator	SN: BH9394 (20k)	09-Apr-21 (No. 217-03343)	Apr-22
Type-N mismatch combination	SN: 310982 / 06327	09-Apr-21 (No. 217-03344)	Apr-22
Reference Probe EX3DV4	SN: 7349	31-Dec-21 (No. EX3-7349_Dec21)	Dec-22
DAE4	SN: 601	01-Nov-21 (No. DAE4-601_Nov21)	Nov-22

Secondary Standards	ID #	Check Date (in house)	Scheduled Check
Power meter E4419B	SN: GB39512475	30-Oct-14 (in house check Oct-20)	In house check: Oct-22
Power sensor HP 8481A	SN: US37292783	07-Oct-15 (in house check Oct-20)	In house check: Oct-22
Power sensor HP 8481A	SN: MY41093315	07-Oct-15 (in house check Oct-20)	In house check: Oct-22
RF generator R&S SMT-06	SN: 100972	15-Jun-15 (in house check Oct-20)	In house check: Oct-22
Network Analyzer Agilent E8358A	SN: US41080477	31-Mar-14 (in house check Oct-20)	In house check: Oct-22

	Name	Function	Signature
Calibrated by:	Joanna Lleshaj	Laboratory Technician	
Approved by:	Sven Kühn	Deputy Manager	

Issued: March 31, 2022

This calibration certificate shall not be reproduced except in full without written approval of the laboratory.

Calibration Laboratory of
Schmid & Partner
Engineering AG
Zeughausstrasse 43, 8004 Zurich, Switzerland

S Schweizerischer Kalibrierdienst
C Service suisse d'étalonnage
Servizio svizzero di taratura
S Swiss Calibration Service

Accredited by the Swiss Accreditation Service (SAS)
The Swiss Accreditation Service is one of the signatories to the EA Multilateral Agreement for the recognition of calibration certificates

Accreditation No.: SCS 0108

Glossary:

TSL	tissue simulating liquid
ConvF	sensitivity in TSL / NORM x,y,z
N/A	not applicable or not measured

Calibration is Performed According to the Following Standards:

a) IEC/IEEE 62209-1528, "Measurement Procedure For The Assessment Of Specific Absorption Rate Of Human Exposure To Radio Frequency Fields From Hand-Held And Body-Worn Wireless Communication Devices - Part 1528: Human Models, Instrumentation And Procedures (Frequency Range of 4 MHz to 10 GHz)", October 2020.
b) KDB 865664, "SAR Measurement Requirements for 100 MHz to 6 GHz"

Additional Documentation:

c) DASY System Handbook

Methods Applied and Interpretation of Parameters:

- *Measurement Conditions:* Further details are available from the Validation Report at the end of the certificate. All figures stated in the certificate are valid at the frequency indicated.
- *Antenna Parameters with TSL:* The source is mounted in a touch configuration below the center marking of the flat phantom.
- *Return Loss:* This parameter is measured with the source positioned under the liquid filled phantom (as described in the measurement condition clause). The Return Loss ensures low reflected power. No uncertainty required.
- *SAR measured:* SAR measured at the stated antenna input power.
- *SAR normalized:* SAR as measured, normalized to an input power of 1 W at the antenna connector.
- *SAR for nominal TSL parameters:* The measured TSL parameters are used to calculate the nominal SAR result.

The reported uncertainty of measurement is stated as the standard uncertainty of measurement multiplied by the coverage factor k=2, which for a normal distribution corresponds to a coverage probability of approximately 95%.

Measurement Conditions

DASY system configuration, as far as not given on page 1.

DASY Version	DASY52	V52.10.4
Extrapolation	Advanced Extrapolation	
Phantom	Modular Flat Phantom	
Distance Dipole Center - TSL	10 mm	with Spacer
Zoom Scan Resolution	dx, dy, dz = 5 mm	
Frequency	1900 MHz ± 1 MHz	

Head TSL parameters

The following parameters and calculations were applied.

	Temperature	**Permittivity**	**Conductivity**
Nominal Head TSL parameters	22.0 °C	40.0	1.40 mho/m
Measured Head TSL parameters	(22.0 ± 0.2) °C	39.4 ± 6 %	1.40 mho/m ± 6 %
Head TSL temperature change during test	< 0.5 °C	----	----

SAR result with Head TSL

SAR averaged over 1 cm³ (1 g) of Head TSL	Condition	
SAR measured	250 mW input power	9.85 W/kg
SAR for nominal Head TSL parameters	normalized to 1W	**39.3 W/kg ± 17.0 % (k=2)**

SAR averaged over 10 cm³ (10 g) of Head TSL	condition	
SAR measured	250 mW input power	5.11 W/kg
SAR for nominal Head TSL parameters	normalized to 1W	**20.4 W/kg ± 16.5 % (k=2)**

Appendix (Additional assessments outside the scope of SCS 0108)

Antenna Parameters with Head TSL

Impedance, transformed to feed point	52.6 Ω + 6.5 jΩ
Return Loss	- 23.4 dB

General Antenna Parameters and Design

Electrical Delay (one direction)	1.201 ns

After long term use with 100W radiated power, only a slight warming of the dipole near the feedpoint can be measured.

The dipole is made of standard semirigid coaxial cable. The center conductor of the feeding line is directly connected to the second arm of the dipole. The antenna is therefore short-circuited for DC-signals. On some of the dipoles, small end caps are added to the dipole arms in order to improve matching when loaded according to the position as explained in the "Measurement Conditions" paragraph. The SAR data are not affected by this change. The overall dipole length is still according to the Standard.
No excessive force must be applied to the dipole arms, because they might bend or the soldered connections near the feedpoint may be damaged.

Additional EUT Data

Manufactured by	SPEAG

DASY5 Validation Report for Head TSL

Date: 30.03.2022

Test Laboratory: SPEAG, Zurich, Switzerland

DUT: Dipole 1900 MHz; Type: D1900V2; Serial: D1900V2 - SN:5d118

Communication System: UID 0 - CW; Frequency: 1900 MHz
Medium parameters used: f = 1900 MHz; σ = 1.40 S/m; ε_r = 39.4; ρ = 1000 kg/m^3
Phantom section: Flat Section
Measurement Standard: DASY5 (IEEE/IEC/ANSI C63.19-2011)

DASY52 Configuration:

- Probe: EX3DV4 - SN7349; ConvF(8.43, 8.43, 8.43) @ 1900 MHz; Calibrated: 31.12.2021
- Sensor-Surface: 1.4mm (Mechanical Surface Detection)
- Electronics: DAE4 Sn601; Calibrated: 01.11.2021
- Phantom: Flat Phantom 5.0 (front); Type: QD 000 P50 AA; Serial: 1001
- DASY52 52.10.4(1535); SEMCAD X 14.6.14(7501)

Dipole Calibration for Head Tissue/Pin=250 mW, d=10mm/Zoom Scan (7x7x7)/Cube 0:

Measurement grid: dx=5mm, dy=5mm, dz=5mm
Reference Value = 109.2 V/m; Power Drift = 0.06 dB
Peak SAR (extrapolated) = 18.4 W/kg
SAR(1 g) = 9.85 W/kg; SAR(10 g) = 5.11 W/kg
Smallest distance from peaks to all points 3 dB below = 10 mm
Ratio of SAR at M2 to SAR at M1 = 54.4%
Maximum value of SAR (measured) = 15.4 W/kg

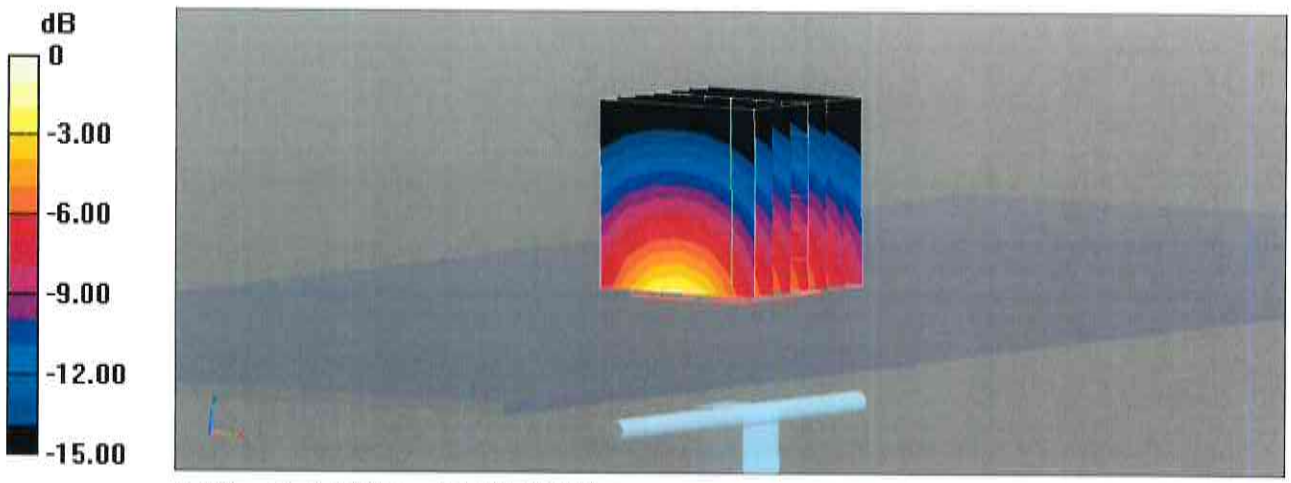

0 dB = 15.4 W/kg = 11.88 dBW/kg

Impedance Measurement Plot for Head TSL

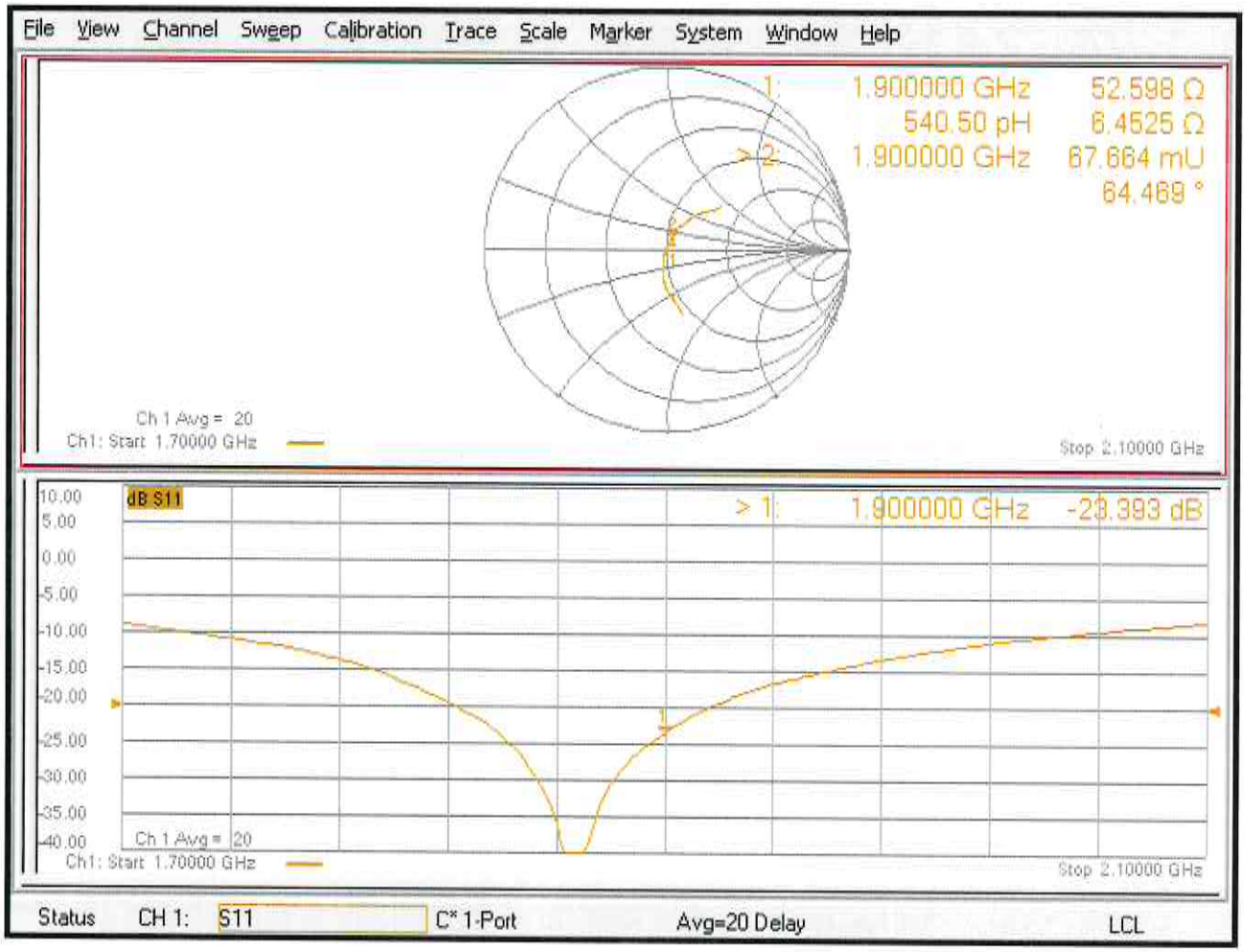

D1900V2, Serial No. 5d118 Extended Dipole Calibrations

If dipoles are verified in return loss (<-20dB, within 20% of priorcalibration), and in impedance (within 5 ohm of prior calibration), the annual calibration is not necessary andthe calibration interval can be extended.

D1900V2 – serial no. 5d118						
1900 Head						
Date of Measurement	Return-Loss (dB)	Delta (%)	Real Impedance (ohm)	Delta (ohm)	Imaginary Impedance (ohm)	Delta (ohm)
2022.3.30	-23.393		52.598		6.4525	
2023.3.29	-25.861	10.55	50.443	2.155	4.8447	1.6078
2024.3.29	-23.315	-0.33	52.154	0.444	4.5235	1.929

<Justification of the extended calibration>

The return loss is < -20dB, within 20% of prior calibration; the impedance is within 5 ohm of prior calibration. Therefore the verification result should support extended calibration.

Dipole Verification Data> D1900V2, serial no. 5d118

1900MHz – Head - 2023-3-29

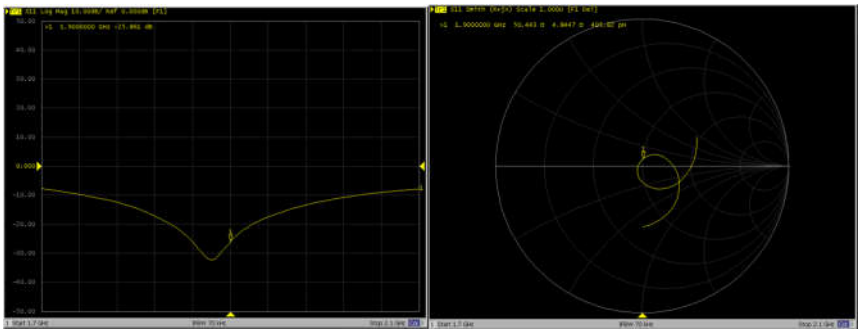

1900MHz – Head - 2024-3-29

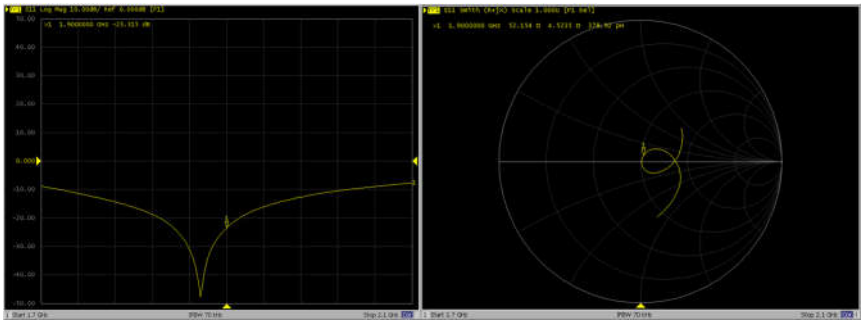

Calibration Laboratory of
Schmid & Partner
Engineering AG
Zeughausstrasse 43, 8004 Zurich, Switzerland

S Schweizerischer Kalibrierdienst
C Service suisse d'étalonnage
Servizio svizzero di taratura
S Swiss Calibration Service

Accredited by the Swiss Accreditation Service (SAS)
The Swiss Accreditation Service is one of the signatories to the EA Multilateral Agreement for the recognition of calibration certificates

Accreditation No.: SCS 0108

Client **Sporton**
Kunshan City

Certificate No. **D2450V2-1095_Feb24**

CALIBRATION CERTIFICATE

Object	D2450V2 - SN:1095
Calibration procedure(s)	QA CAL-05.v12 Calibration Procedure for SAR Validation Sources between 0.7-3 GHz
Calibration date:	February 08, 2024

This calibration certificate documents the traceability to national standards, which realize the physical units of measurements (SI).
The measurements and the uncertainties with confidence probability are given on the following pages and are part of the certificate.

All calibrations have been conducted in the closed laboratory facility: environment temperature (22 ± 3)°C and humidity < 70%.

Calibration Equipment used (M&TE critical for calibration)

Primary Standards	ID #	Cal Date (Certificate No.)	Scheduled Calibration
Power meter NRP2	SN: 104778	30-Mar-23 (No. 217-03804/03805)	Mar-24
Power sensor NRP-Z91	SN: 103244	30-Mar-23 (No. 217-03804)	Mar-24
Power sensor NRP-Z91	SN: 103245	30-Mar-23 (No. 217-03805)	Mar-24
Reference 20 dB Attenuator	SN: BH9394 (20k)	30-Mar-23 (No. 217-03809)	Mar-24
Type-N mismatch combination	SN: 310982 / 06327	30-Mar-23 (No. 217-03810)	Mar-24
Reference Probe EX3DV4	SN: 7349	03-Nov-23 (No. EX3-7349_Nov23)	Nov-24
DAE4	SN: 601	30-Jan-24 (No. DAE4-601_Jan24)	Jan-25

Secondary Standards	ID #	Check Date (in house)	Scheduled Check
Power meter E4419B	SN: GB39512475	30-Oct-14 (in house check Oct-22)	In house check: Oct-24
Power sensor HP 8481A	SN: US37292783	07-Oct-15 (in house check Oct-22)	In house check: Oct-24
Power sensor HP 8481A	SN: MY41093315	07-Oct-15 (in house check Oct-22)	In house check: Oct-24
RF generator R&S SMT-06	SN: 100972	15-Jun-15 (in house check Oct-22)	In house check: Oct-24
Network Analyzer Agilent E8358A	SN: US41080477	31-Mar-14 (in house check Oct-22)	In house check: Oct-24

	Name	Function	Signature
Calibrated by:	Paulo Pina	Laboratory Technician	
Approved by:	Sven Kühn	Technical Manager	

Issued: February 9, 2024

This calibration certificate shall not be reproduced except in full without written approval of the laboratory.

Calibration Laboratory of
Schmid & Partner
Engineering AG
Zeughausstrasse 43, 8004 Zurich, Switzerland

Accredited by the Swiss Accreditation Service (SAS)
The Swiss Accreditation Service is one of the signatories to the EA Multilateral Agreement for the recognition of calibration certificates

S Schweizerischer Kalibrierdienst
C Service suisse d'étalonnage
S Servizio svizzero di taratura
Swiss Calibration Service

Accreditation No.: SCS 0108

Glossary:

TSL	tissue simulating liquid
ConvF	sensitivity in TSL / NORM x,y,z
N/A	not applicable or not measured

Calibration is Performed According to the Following Standards:

a) IEC/IEEE 62209-1528, "Measurement Procedure For The Assessment Of Specific Absorption Rate Of Human Exposure To Radio Frequency Fields From Hand-Held And Body-Worn Wireless Communication Devices - Part 1528: Human Models, Instrumentation And Procedures (Frequency Range of 4 MHz to 10 GHz)", October 2020.
b) KDB 865664, "SAR Measurement Requirements for 100 MHz to 6 GHz"

Additional Documentation:

c) DASY System Handbook

Methods Applied and Interpretation of Parameters:

- *Measurement Conditions:* Further details are available from the Validation Report at the end of the certificate. All figures stated in the certificate are valid at the frequency indicated.
- *Antenna Parameters with TSL:* The source is mounted in a touch configuration below the center marking of the flat phantom.
- *Return Loss:* This parameter is measured with the source positioned under the liquid filled phantom (as described in the measurement condition clause). The Return Loss ensures low reflected power. No uncertainty required.
- *SAR measured:* SAR measured at the stated antenna input power.
- *SAR normalized:* SAR as measured, normalized to an input power of 1 W at the antenna connector.
- *SAR for nominal TSL parameters:* The measured TSL parameters are used to calculate the nominal SAR result.

The reported uncertainty of measurement is stated as the standard uncertainty of measurement multiplied by the coverage factor k=2, which for a normal distribution corresponds to a coverage probability of approximately 95%.

Measurement Conditions

DASY system configuration, as far as not given on page 1.

DASY Version	DASY52	V52.10.4
Extrapolation	Advanced Extrapolation	
Phantom	Modular Flat Phantom	
Distance Dipole Center - TSL	10 mm	with Spacer
Zoom Scan Resolution	dx, dy, dz = 5 mm	
Frequency	2450 MHz ± 1 MHz	

Head TSL parameters

The following parameters and calculations were applied.

	Temperature	**Permittivity**	**Conductivity**
Nominal Head TSL parameters	22.0 °C	39.2	1.80 mho/m
Measured Head TSL parameters	(22.0 ± 0.2) °C	38.2 ± 6 %	1.88 mho/m ± 6 %
Head TSL temperature change during test	< 0.5 °C	----	----

SAR result with Head TSL

SAR averaged over 1 cm³ (1 g) of Head TSL	Condition	
SAR measured	250 mW input power	13.5 W/kg
SAR for nominal Head TSL parameters	normalized to 1W	**52.6 W/kg ± 17.0 % (k=2)**

SAR averaged over 10 cm³ (10 g) of Head TSL	condition	
SAR measured	250 mW input power	6.27 W/kg
SAR for nominal Head TSL parameters	normalized to 1W	**24.7 W/kg ± 16.5 % (k=2)**

Appendix (Additional assessments outside the scope of SCS 0108)

Antenna Parameters with Head TSL

Impedance, transformed to feed point	51.3 Ω + 6.1 jΩ
Return Loss	- 24.3 dB

General Antenna Parameters and Design

Electrical Delay (one direction)	1.147 ns

After long term use with 100W radiated power, only a slight warming of the dipole near the feedpoint can be measured.

The dipole is made of standard semirigid coaxial cable. The center conductor of the feeding line is directly connected to the second arm of the dipole. The antenna is therefore short-circuited for DC-signals. On some of the dipoles, small end caps are added to the dipole arms in order to improve matching when loaded according to the position as explained in the "Measurement Conditions" paragraph. The SAR data are not affected by this change. The overall dipole length is still according to the Standard.
No excessive force must be applied to the dipole arms, because they might bend or the soldered connections near the feedpoint may be damaged.

Additional EUT Data

Manufactured by	SPEAG

DASY5 Validation Report for Head TSL

Date: 08.02.2024

Test Laboratory: SPEAG, Zurich, Switzerland

DUT: Dipole 2450 MHz; Type: D2450V2; Serial: D2450V2 - SN:1095

Communication System: UID 0 - CW; Frequency: 2450 MHz
Medium parameters used: f = 2450 MHz; σ = 1.88 S/m; ε_r = 38.2; ρ = 1000 kg/m^3
Phantom section: Flat Section
Measurement Standard: DASY5 (IEEE/IEC/ANSI C63.19-2011)

DASY52 Configuration:

- Probe: EX3DV4 - SN7349; ConvF(7.96, 7.96, 7.96) @ 2450 MHz; Calibrated: 03.11.2023
- Sensor-Surface: 1.4mm (Mechanical Surface Detection)
- Electronics: DAE4 Sn601; Calibrated: 30.01.2024
- Phantom: Flat Phantom 5.0 (front); Type: QD000P50AA; Serial: 1001
- DASY52 52.10.4(1535); SEMCAD X 14.6.14(7501)

Dipole Calibration for Head Tissue/Pin=250 mW, d=10mm/Zoom Scan (7x7x7)/Cube 0:

Measurement grid: dx=5mm, dy=5mm, dz=5mm
Reference Value = 116.2 V/m; Power Drift = 0.08 dB
Peak SAR (extrapolated) = 26.7 W/kg
SAR(1 g) = 13.5 W/kg; SAR(10 g) = 6.27 W/kg
Smallest distance from peaks to all points 3 dB below = 9 mm
Ratio of SAR at M2 to SAR at M1 = 50.6%
Maximum value of SAR (measured) = 21.8 W/kg

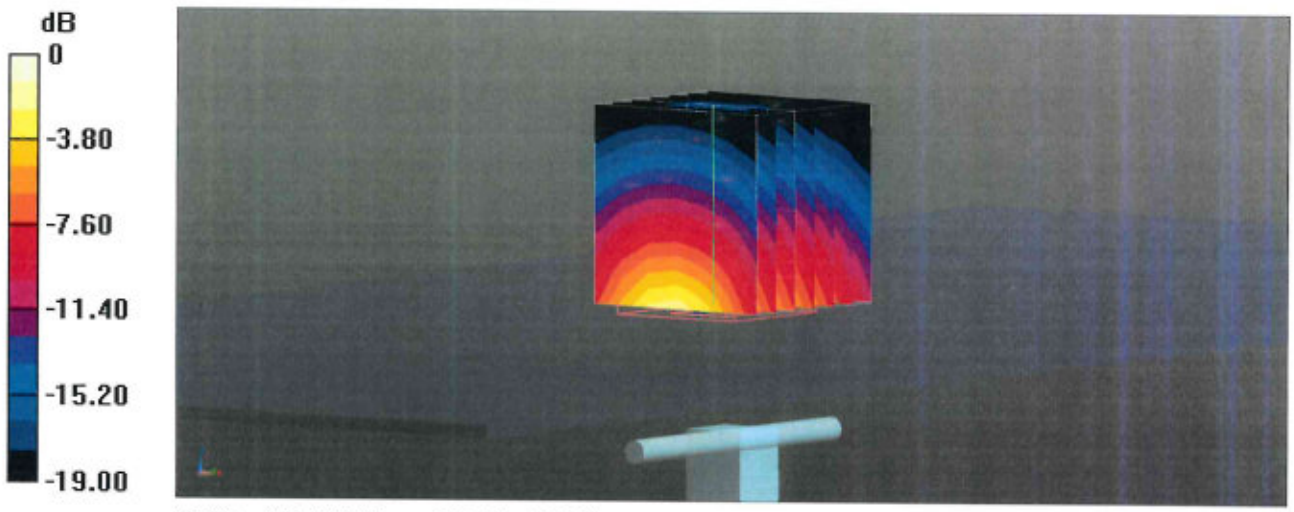

0 dB = 21.8 W/kg = 13.38 dBW/kg

Impedance Measurement Plot for Head TSL

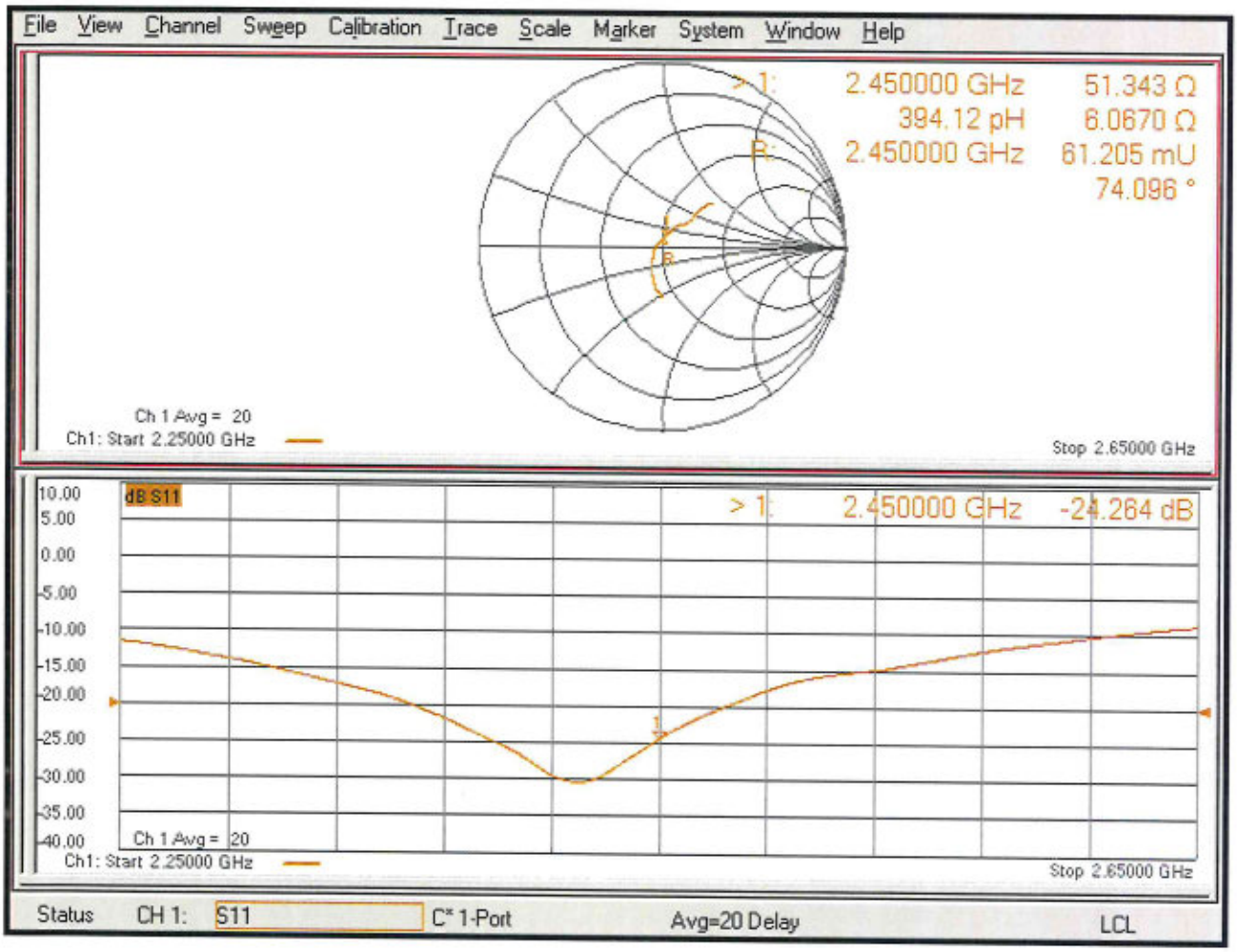

Appendix: Transfer Calibration at Four Validation Locations on SAM Head[1]

Evaluation Condition

Phantom	SAM Head Phantom	For usage with cSAR3D**V2**-R/L

SAR result with SAM Head (Top ≅ C0)

SAR averaged over 1 cm³ (1 g) of Head TSL	Condition	
SAR for nominal Head TSL parameters	normalized to 1W	**56.1 W/kg ± 17.5 % (k=2)**

SAR averaged over 10 cm³ (10 g) of Head TSL	condition	
SAR for nominal Head TSL parameters	normalized to 1W	**26.2 W/kg ± 16.9 % (k=2)**

SAR result with SAM Head (Mouth ≅ F90)

SAR averaged over 1 cm³ (1 g) of Head TSL	Condition	
SAR for nominal Head TSL parameters	normalized to 1W	**57.2 W/kg ± 17.5 % (k=2)**

SAR averaged over 10 cm³ (10 g) of Head TSL	condition	
SAR for nominal Head TSL parameters	normalized to 1W	**27.5 W/kg ± 16.9 % (k=2)**

SAR result with SAM Head (Neck ≅ H0)

SAR averaged over 1 cm³ (1 g) of Head TSL	Condition	
SAR for nominal Head TSL parameters	normalized to 1W	**53.9 W/kg ± 17.5 % (k=2)**

SAR averaged over 10 cm³ (10 g) of Head TSL	condition	
SAR for nominal Head TSL parameters	normalized to 1W	**25.1 W/kg ± 16.9 % (k=2)**

SAR result with SAM Head (Ear ≅ D90)

SAR averaged over 1 cm³ (1 g) of Head TSL	Condition	
SAR for nominal Head TSL parameters	normalized to 1W	**34.5 W/kg ± 17.5 % (k=2)**

SAR averaged over 10 cm³ (10 g) of Head TSL	condition	
SAR for nominal Head TSL parameters	normalized to 1W	**17.5 W/kg ± 16.9 % (k=2)**

[1] Additional assessments outside the current scope of SCS 0108

Calibration Laboratory of
Schmid & Partner
Engineering AG
Zeughausstrasse 43, 8004 Zurich, Switzerland

S Schweizerischer Kalibrierdienst
C Service suisse d'étalonnage
Servizio svizzero di taratura
S Swiss Calibration Service

Accredited by the Swiss Accreditation Service (SAS)
The Swiss Accreditation Service is one of the signatories to the EA Multilateral Agreement for the recognition of calibration certificates

Accreditation No.: SCS 0108

Client **Sporton**
Kunshan City

Certificate No. **D2600V2-1112_Dec23**

CALIBRATION CERTIFICATE

Object	D2600V2 - SN:1112
Calibration procedure(s)	QA CAL-05.v12 Calibration Procedure for SAR Validation Sources between 0.7-3 GHz
Calibration date:	December 18, 2023

This calibration certificate documents the traceability to national standards, which realize the physical units of measurements (SI).
The measurements and the uncertainties with confidence probability are given on the following pages and are part of the certificate.

All calibrations have been conducted in the closed laboratory facility: environment temperature (22 ± 3)°C and humidity < 70%.

Calibration Equipment used (M&TE critical for calibration)

Primary Standards	ID #	Cal Date (Certificate No.)	Scheduled Calibration
Power meter NRP2	SN: 104778	30-Mar-23 (No. 217-03804/03805)	Mar-24
Power sensor NRP-Z91	SN: 103244	30-Mar-23 (No. 217-03804)	Mar-24
Power sensor NRP-Z91	SN: 103245	30-Mar-23 (No. 217-03805)	Mar-24
Reference 20 dB Attenuator	SN: BH9394 (20k)	30-Mar-23 (No. 217-03809)	Mar-24
Type-N mismatch combination	SN: 310982 / 06327	30-Mar-23 (No. 217-03810)	Mar-24
Reference Probe EX3DV4	SN: 7349	03-Nov-23 (No. EX3-7349_Nov23)	Nov-24
DAE4	SN: 601	03-Oct-23 (No. DAE4-601_Oct23)	Oct-24

Secondary Standards	ID #	Check Date (in house)	Scheduled Check
Power meter E4419B	SN: GB39512475	30-Oct-14 (in house check Oct-22)	In house check: Oct-24
Power sensor HP 8481A	SN: US37292783	07-Oct-15 (in house check Oct-22)	In house check: Oct-24
Power sensor HP 8481A	SN: MY41093315	07-Oct-15 (in house check Oct-22)	In house check: Oct-24
RF generator R&S SMT-06	SN: 100972	15-Jun-15 (in house check Oct-22)	In house check: Oct-24
Network Analyzer Agilent E8358A	SN: US41080477	31-Mar-14 (in house check Oct-22)	In house check: Oct-24

	Name	Function	Signature
Calibrated by:	Krešimir Franjić	Laboratory Technician	
Approved by:	Sven Kühn	Technical Manager	

Issued: December 18, 2023

This calibration certificate shall not be reproduced except in full without written approval of the laboratory.

Calibration Laboratory of
Schmid & Partner
Engineering AG
Zeughausstrasse 43, 8004 Zurich, Switzerland

Accredited by the Swiss Accreditation Service (SAS)
The Swiss Accreditation Service is one of the signatories to the EA Multilateral Agreement for the recognition of calibration certificates

S Schweizerischer Kalibrierdienst
C Service suisse d'étalonnage
S Servizio svizzero di taratura
Swiss Calibration Service

Accreditation No.: SCS 0108

Glossary:

TSL	tissue simulating liquid
ConvF	sensitivity in TSL / NORM x,y,z
N/A	not applicable or not measured

Calibration is Performed According to the Following Standards:

a) IEC/IEEE 62209-1528, "Measurement Procedure For The Assessment Of Specific Absorption Rate Of Human Exposure To Radio Frequency Fields From Hand-Held And Body-Worn Wireless Communication Devices - Part 1528: Human Models, Instrumentation And Procedures (Frequency Range of 4 MHz to 10 GHz)", October 2020.
b) KDB 865664, "SAR Measurement Requirements for 100 MHz to 6 GHz"

Additional Documentation:

c) DASY System Handbook

Methods Applied and Interpretation of Parameters:

- *Measurement Conditions:* Further details are available from the Validation Report at the end of the certificate. All figures stated in the certificate are valid at the frequency indicated.
- *Antenna Parameters with TSL:* The source is mounted in a touch configuration below the center marking of the flat phantom.
- *Return Loss:* This parameter is measured with the source positioned under the liquid filled phantom (as described in the measurement condition clause). The Return Loss ensures low reflected power. No uncertainty required.
- *SAR measured:* SAR measured at the stated antenna input power.
- *SAR normalized:* SAR as measured, normalized to an input power of 1 W at the antenna connector.
- *SAR for nominal TSL parameters:* The measured TSL parameters are used to calculate the nominal SAR result.

The reported uncertainty of measurement is stated as the standard uncertainty of measurement multiplied by the coverage factor k=2, which for a normal distribution corresponds to a coverage probability of approximately 95%.

Measurement Conditions

DASY system configuration, as far as not given on page 1.

DASY Version	DASY52	V52.10.4
Extrapolation	Advanced Extrapolation	
Phantom	Modular Flat Phantom	
Distance Dipole Center - TSL	10 mm	with Spacer
Zoom Scan Resolution	dx, dy, dz = 5 mm	
Frequency	2600 MHz ± 1 MHz	

Head TSL parameters

The following parameters and calculations were applied.

	Temperature	**Permittivity**	**Conductivity**
Nominal Head TSL parameters	22.0 °C	39.0	1.96 mho/m
Measured Head TSL parameters	(22.0 ± 0.2) °C	37.6 ± 6 %	2.02 mho/m ± 6 %
Head TSL temperature change during test	< 0.5 °C	----	----

SAR result with Head TSL

SAR averaged over 1 cm^3 (1 g) of Head TSL	Condition	
SAR measured	250 mW input power	14.1 W/kg
SAR for nominal Head TSL parameters	normalized to 1W	**55.1 W/kg ± 17.0 % (k=2)**

SAR averaged over 10 cm^3 (10 g) of Head TSL	condition	
SAR measured	250 mW input power	6.28 W/kg
SAR for nominal Head TSL parameters	normalized to 1W	**24.8 W/kg ± 16.5 % (k=2)**

Appendix (Additional assessments outside the scope of SCS 0108)

Antenna Parameters with Head TSL

Impedance, transformed to feed point	47.7 Ω - 7.0 jΩ
Return Loss	- 22.5 dB

General Antenna Parameters and Design

Electrical Delay (one direction)	1.149 ns

After long term use with 100W radiated power, only a slight warming of the dipole near the feedpoint can be measured.

The dipole is made of standard semirigid coaxial cable. The center conductor of the feeding line is directly connected to the second arm of the dipole. The antenna is therefore short-circuited for DC-signals. On some of the dipoles, small end caps are added to the dipole arms in order to improve matching when loaded according to the position as explained in the "Measurement Conditions" paragraph. The SAR data are not affected by this change. The overall dipole length is still according to the Standard.
No excessive force must be applied to the dipole arms, because they might bend or the soldered connections near the feedpoint may be damaged.

Additional EUT Data

Manufactured by	SPEAG

DASY5 Validation Report for Head TSL

Date: 18.12.2023

Test Laboratory: SPEAG, Zurich, Switzerland

DUT: Dipole 2600 MHz; Type: D2600V2; Serial: D2600V2 - SN:1112

Communication System: UID 0 - CW; Frequency: 2600 MHz
Medium parameters used: f = 2600 MHz; σ = 2.02 S/m; ε_r = 37.6; ρ = 1000 kg/m^3
Phantom section: Flat Section
Measurement Standard: DASY5 (IEEE/IEC/ANSI C63.19-2011)

DASY52 Configuration:

- Probe: EX3DV4 - SN7349; ConvF(7.84, 7.84, 7.84) @ 2600 MHz; Calibrated: 03.11.2023
- Sensor-Surface: 1.4mm (Mechanical Surface Detection)
- Electronics: DAE4 Sn601; Calibrated: 03.10.2023
- Phantom: Flat Phantom 5.0 (front); Type: QD000P50AA; Serial: 1001
- DASY52 52.10.4(1535); SEMCAD X 14.6.14(7501)

Dipole Calibration for Head Tissue/Pin=250 mW, d=10mm/Zoom Scan (7x7x7)/Cube 0:

Measurement grid: dx=5mm, dy=5mm, dz=5mm
Reference Value = 117.5 V/m; Power Drift = 0.01 dB
Peak SAR (extrapolated) = 27.6 W/kg
SAR(1 g) = 14.1 W/kg; SAR(10 g) = 6.28 W/kg
Smallest distance from peaks to all points 3 dB below = 8.9 mm
Ratio of SAR at M2 to SAR at M1 = 51%
Maximum value of SAR (measured) = 23.3 W/kg

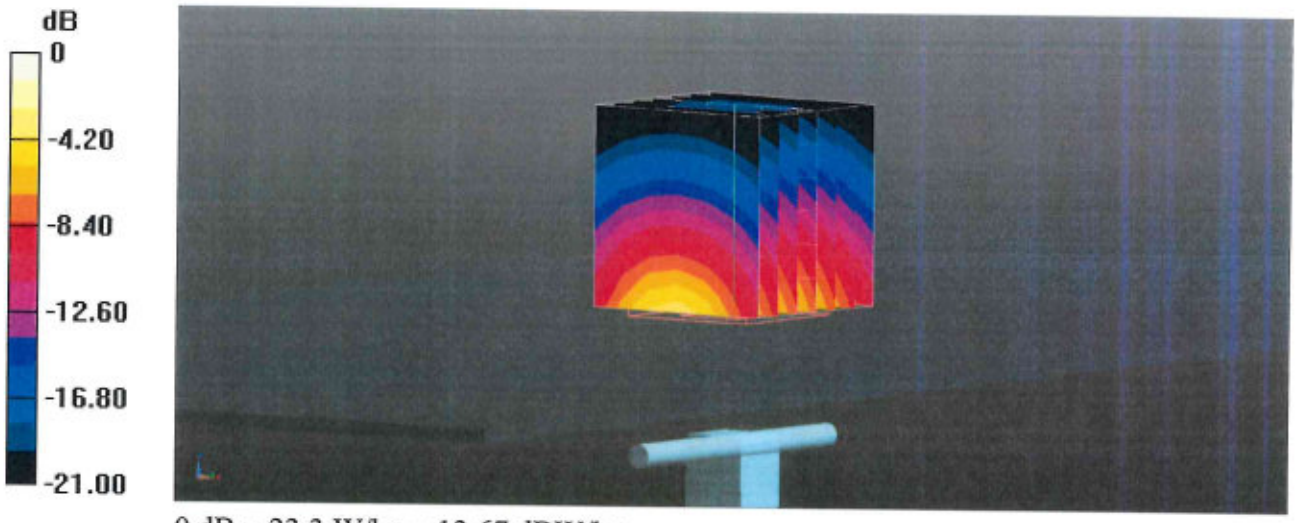

0 dB = 23.3 W/kg = 13.67 dBW/kg

Impedance Measurement Plot for Head TSL

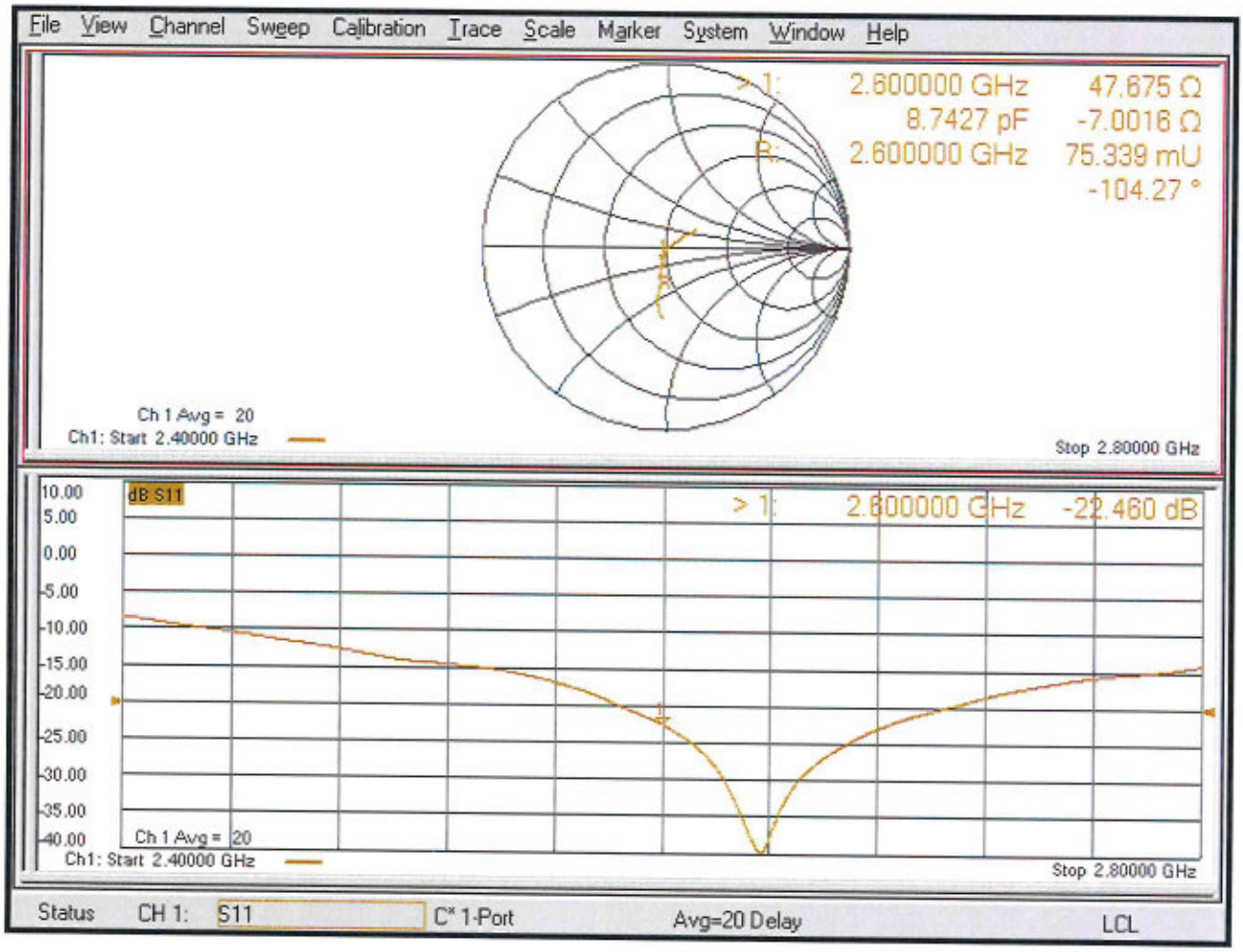

Calibration Laboratory of
Schmid & Partner
Engineering AG
Zeughausstrasse 43, 8004 Zurich, Switzerland

S Schweizerischer Kalibrierdienst
C Service suisse d'étalonnage
Servizio svizzero di taratura
S Swiss Calibration Service

Accredited by the Swiss Accreditation Service (SAS)
The Swiss Accreditation Service is one of the signatories to the EA Multilateral Agreement for the recognition of calibration certificates

Accreditation No.: SCS 0108

Client **Sporton**
Kunshan City

Certificate No. **D3500V2-1037_Nov23**

CALIBRATION CERTIFICATE

Object	D3500V2 - SN:1037
Calibration procedure(s)	QA CAL-22.v7 Calibration Procedure for SAR Validation Sources between 3-10 GHz
Calibration date:	November 20, 2023

This calibration certificate documents the traceability to national standards, which realize the physical units of measurements (SI).
The measurements and the uncertainties with confidence probability are given on the following pages and are part of the certificate.

All calibrations have been conducted in the closed laboratory facility: environment temperature (22 ± 3)°C and humidity < 70%.

Calibration Equipment used (M&TE critical for calibration)

Primary Standards	ID #	Cal Date (Certificate No.)	Scheduled Calibration
Power meter NRP2	SN: 104778	30-Mar-23 (No. 217-03804/03805)	Mar-24
Power sensor NRP-Z91	SN: 103244	30-Mar-23 (No. 217-03804)	Mar-24
Power sensor NRP-Z91	SN: 103245	30-Mar-23 (No. 217-03805)	Mar-24
Reference 20 dB Attenuator	SN: BH9394 (20k)	30-Mar-23 (No. 217-03809)	Mar-24
Type-N mismatch combination	SN: 310982 / 06327	30-Mar-23 (No. 217-03810)	Mar-24
Reference Probe EX3DV4	SN: 3503	07-Mar-23 (No. EX3-3503_Mar23)	Mar-24
DAE4	SN: 601	03-Oct-23 (No. DAE4-601_Oct23)	Oct-24

Secondary Standards	ID #	Check Date (in house)	Scheduled Check
Power meter E4419B	SN: GB39512475	30-Oct-14 (in house check Oct-22)	In house check: Oct-24
Power sensor HP 8481A	SN: US37292783	07-Oct-15 (in house check Oct-22)	In house check: Oct-24
Power sensor HP 8481A	SN: MY41093315	07-Oct-15 (in house check Oct-22)	In house check: Oct-24
RF generator R&S SMT-06	SN: 100972	15-Jun-15 (in house check Oct-22)	In house check: Oct-24
Network Analyzer Agilent E8358A	SN: US41080477	31-Mar-14 (in house check Oct-22)	In house check: Oct-24

	Name	Function	Signature
Calibrated by:	Paulo Pina	Laboratory Technician	
Approved by:	Sven Kühn	Technical Manager	

Issued: November 22, 2023

This calibration certificate shall not be reproduced except in full without written approval of the laboratory.

Calibration Laboratory of
Schmid & Partner
Engineering AG
Zeughausstrasse 43, 8004 Zurich, Switzerland

Accredited by the Swiss Accreditation Service (SAS)
The Swiss Accreditation Service is one of the signatories to the EA Multilateral Agreement for the recognition of calibration certificates

S C S **Schweizerischer Kalibrierdienst**
Service suisse d'étalonnage
Servizio svizzero di taratura
Swiss Calibration Service

Accreditation No.: SCS 0108

Glossary:

TSL	tissue simulating liquid
ConvF	sensitivity in TSL / NORM x,y,z
N/A	not applicable or not measured

Calibration is Performed According to the Following Standards:

a) IEC/IEEE 62209-1528, "Measurement Procedure For The Assessment Of Specific Absorption Rate Of Human Exposure To Radio Frequency Fields From Hand-Held And Body-Worn Wireless Communication Devices - Part 1528: Human Models, Instrumentation And Procedures (Frequency Range of 4 MHz to 10 GHz)", October 2020.
b) KDB 865664, "SAR Measurement Requirements for 100 MHz to 6 GHz"

Additional Documentation:

c) DASY System Handbook

Methods Applied and Interpretation of Parameters:

- *Measurement Conditions:* Further details are available from the Validation Report at the end of the certificate. All figures stated in the certificate are valid at the frequency indicated.
- *Antenna Parameters with TSL:* The source is mounted in a touch configuration below the center marking of the flat phantom.
- *Return Loss:* This parameter is measured with the source positioned under the liquid filled phantom (as described in the measurement condition clause). The Return Loss ensures low reflected power. No uncertainty required.
- *SAR measured:* SAR measured at the stated antenna input power.
- *SAR normalized:* SAR as measured, normalized to an input power of 1 W at the antenna connector.
- *SAR for nominal TSL parameters:* The measured TSL parameters are used to calculate the nominal SAR result.

The reported uncertainty of measurement is stated as the standard uncertainty of measurement multiplied by the coverage factor k=2, which for a normal distribution corresponds to a coverage probability of approximately 95%.

Measurement Conditions

DASY system configuration, as far as not given on page 1.

DASY Version	DASY52	V52.10.4
Extrapolation	Advanced Extrapolation	
Phantom	Modular Flat Phantom	
Distance Dipole Center - TSL	10 mm	with Spacer
Zoom Scan Resolution	dx, dy = 4 mm, dz = 1.4 mm	Graded Ratio = 1.4 (Z direction)
Frequency	3500 MHz ± 1 MHz	

Head TSL parameters

The following parameters and calculations were applied.

	Temperature	**Permittivity**	**Conductivity**
Nominal Head TSL parameters	22.0 °C	37.9	2.91 mho/m
Measured Head TSL parameters	(22.0 ± 0.2) °C	38.3 ± 6 %	2.91 mho/m ± 6 %
Head TSL temperature change during test	< 0.5 °C	----	----

SAR result with Head TSL

SAR averaged over 1 cm³ (1 g) of Head TSL	Condition	
SAR measured	100 mW input power	6.52 W/kg
SAR for nominal Head TSL parameters	normalized to 1W	**65.4 W/kg ± 19.9 % (k=2)**

SAR averaged over 10 cm³ (10 g) of Head TSL	condition	
SAR measured	100 mW input power	2.46 W/kg
SAR for nominal Head TSL parameters	normalized to 1W	**24.7 W/kg ± 19.5 % (k=2)**

Appendix (Additional assessments outside the scope of SCS 0108)

Antenna Parameters with Head TSL

Impedance, transformed to feed point	52.0 Ω - 1.1 jΩ
Return Loss	- 32.9 dB

General Antenna Parameters and Design

Electrical Delay (one direction)	1.142 ns

After long term use with 100W radiated power, only a slight warming of the dipole near the feedpoint can be measured.

The dipole is made of standard semirigid coaxial cable. The center conductor of the feeding line is directly connected to the second arm of the dipole. The antenna is therefore short-circuited for DC-signals. On some of the dipoles, small end caps are added to the dipole arms in order to improve matching when loaded according to the position as explained in the "Measurement Conditions" paragraph. The SAR data are not affected by this change. The overall dipole length is still according to the Standard.
No excessive force must be applied to the dipole arms, because they might bend or the soldered connections near the feedpoint may be damaged.

Additional EUT Data

Manufactured by	SPEAG

DASY5 Validation Report for Head TSL

Date: 20.11.2023

Test Laboratory: SPEAG, Zurich, Switzerland

DUT: Dipole 3500 MHz; Type: D3500V2; Serial: D3500V2 - SN:1037

Communication System: UID 0 - CW; Frequency: 3500 MHz
Medium parameters used: f = 3500 MHz; σ = 2.91 S/m; ε_r = 38.3; ρ = 1000 kg/m^3
Phantom section: Flat Section
Measurement Standard: DASY5 (IEEE/IEC/ANSI C63.19-2011)

DASY52 Configuration:

- Probe: EX3DV4 - SN3503; ConvF(7.91, 7.91, 7.91) @ 3500 MHz; Calibrated: 07.03.2023
- Sensor-Surface: 1.4mm (Mechanical Surface Detection)
- Electronics: DAE4 Sn601; Calibrated: 03.10.2023
- Phantom: Flat Phantom 5.0 (front); Type: QD000P50AA; Serial: 1001
- DASY52 52.10.4(1535); SEMCAD X 14.6.14(7501)

Dipole Calibration for Head Tissue/Pin=100 mW, d=10mm, f=3500MHz/Zoom Scan, dist=1.4mm (8x8x8)/Cube 0: Measurement grid: dx=4mm, dy=4mm, dz=1.4mm
Reference Value = 67.12 V/m; Power Drift = 0.08 dB
Peak SAR (extrapolated) = 16.8 W/kg
SAR(1 g) = 6.52 W/kg; SAR(10 g) = 2.46 W/kg
Smallest distance from peaks to all points 3 dB below = 8 mm
Ratio of SAR at M2 to SAR at M1 = 75.7%
Maximum value of SAR (measured) = 12.1 W/kg

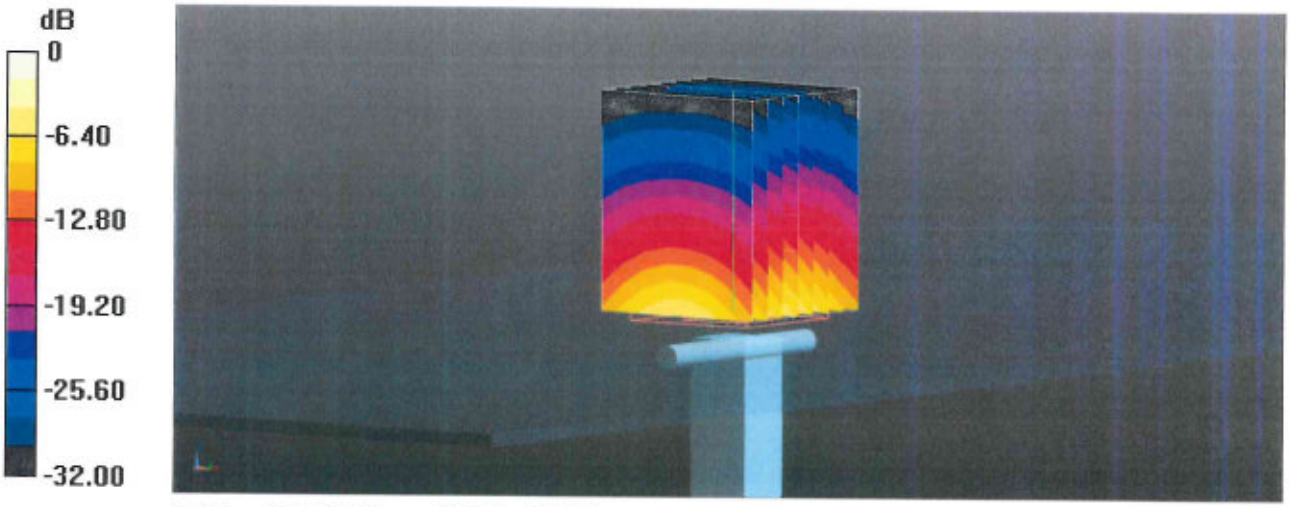

0 dB = 12.1 W/kg = 10.81 dBW/kg

Impedance Measurement Plot for Head TSL

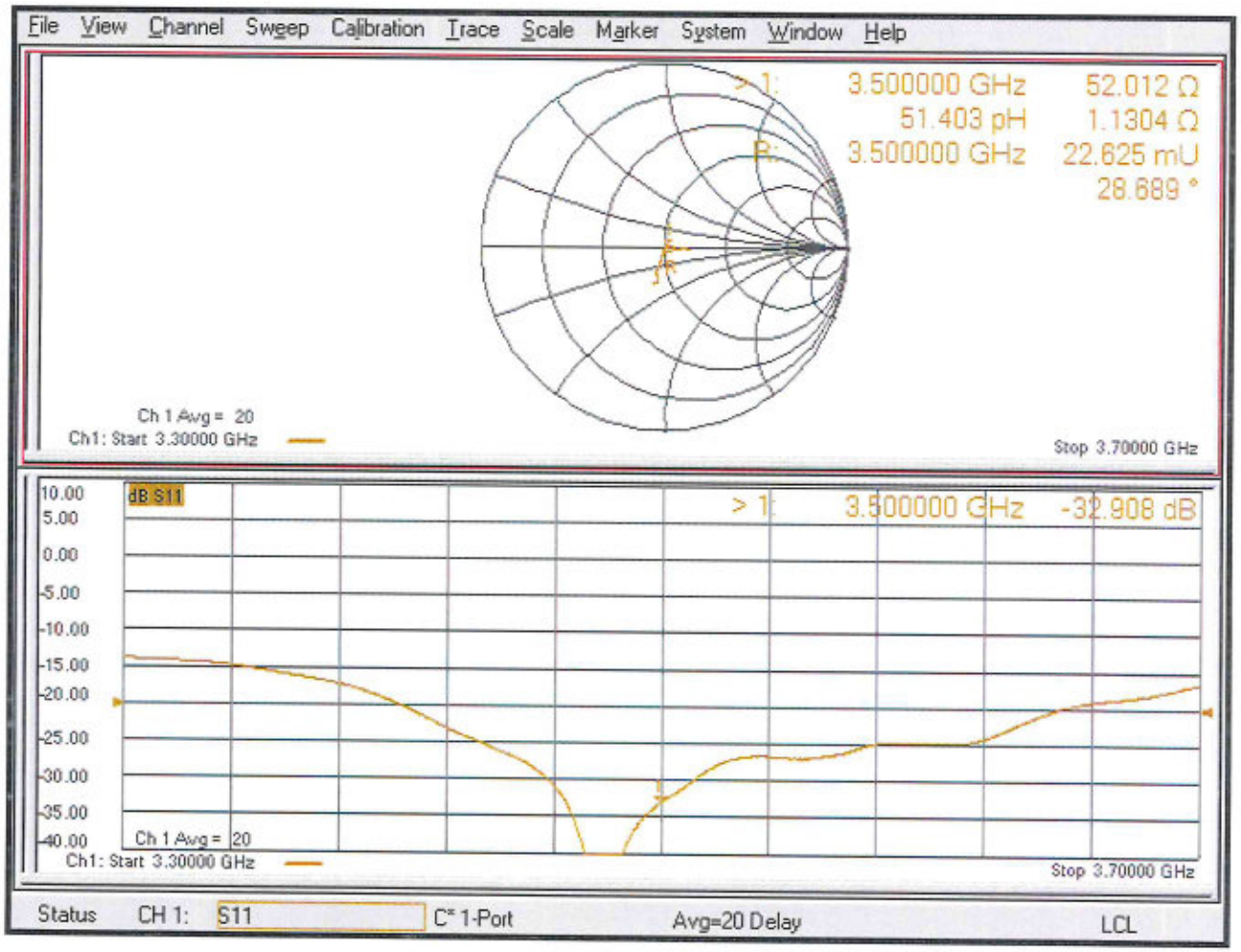

Calibration Laboratory of
Schmid & Partner
Engineering AG
Zeughausstrasse 43, 8004 Zurich, Switzerland

S Schweizerischer Kalibrierdienst
C Service suisse d'étalonnage
Servizio svizzero di taratura
S Swiss Calibration Service

Accredited by the Swiss Accreditation Service (SAS)
The Swiss Accreditation Service is one of the signatories to the EA Multilateral Agreement for the recognition of calibration certificates

Accreditation No.: SCS 0108

Client **Sporton**
Kunshan City

Certificate No. **D3700V2-1008_Nov23**

CALIBRATION CERTIFICATE

Object	D3700V2 - SN:1008
Calibration procedure(s)	QA CAL-22.v7 Calibration Procedure for SAR Validation Sources between 3-10 GHz
Calibration date:	November 20, 2023

This calibration certificate documents the traceability to national standards, which realize the physical units of measurements (SI).
The measurements and the uncertainties with confidence probability are given on the following pages and are part of the certificate.

All calibrations have been conducted in the closed laboratory facility: environment temperature (22 ± 3)°C and humidity < 70%.

Calibration Equipment used (M&TE critical for calibration)

Primary Standards	ID #	Cal Date (Certificate No.)	Scheduled Calibration
Power meter NRP2	SN: 104778	30-Mar-23 (No. 217-03804/03805)	Mar-24
Power sensor NRP-Z91	SN: 103244	30-Mar-23 (No. 217-03804)	Mar-24
Power sensor NRP-Z91	SN: 103245	30-Mar-23 (No. 217-03805)	Mar-24
Reference 20 dB Attenuator	SN: BH9394 (20k)	30-Mar-23 (No. 217-03809)	Mar-24
Type-N mismatch combination	SN: 310982 / 06327	30-Mar-23 (No. 217-03810)	Mar-24
Reference Probe EX3DV4	SN: 3503	07-Mar-23 (No. EX3-3503_Mar23)	Mar-24
DAE4	SN: 601	03-Oct-23 (No. DAE4-601_Oct23)	Oct-24

Secondary Standards	ID #	Check Date (in house)	Scheduled Check
Power meter E4419B	SN: GB39512475	30-Oct-14 (in house check Oct-22)	In house check: Oct-24
Power sensor HP 8481A	SN: US37292783	07-Oct-15 (in house check Oct-22)	In house check: Oct-24
Power sensor HP 8481A	SN: MY41093315	07-Oct-15 (in house check Oct-22)	In house check: Oct-24
RF generator R&S SMT-06	SN: 100972	15-Jun-15 (in house check Oct-22)	In house check: Oct-24
Network Analyzer Agilent E8358A	SN: US41080477	31-Mar-14 (in house check Oct-22)	In house check: Oct-24

	Name	Function	Signature
Calibrated by:	Paulo Pina	Laboratory Technician	
Approved by:	Sven Kühn	Technical Manager	

Issued: November 21, 2023

This calibration certificate shall not be reproduced except in full without written approval of the laboratory.

Calibration Laboratory of
Schmid & Partner
Engineering AG
Zeughausstrasse 43, 8004 Zurich, Switzerland

Accredited by the Swiss Accreditation Service (SAS)
The Swiss Accreditation Service is one of the signatories to the EA Multilateral Agreement for the recognition of calibration certificates

S Schweizerischer Kalibrierdienst
C Service suisse d'étalonnage
S Servizio svizzero di taratura
Swiss Calibration Service

Accreditation No.: SCS 0108

Glossary:

TSL	tissue simulating liquid
ConvF	sensitivity in TSL / NORM x,y,z
N/A	not applicable or not measured

Calibration is Performed According to the Following Standards:

a) IEC/IEEE 62209-1528, "Measurement Procedure For The Assessment Of Specific Absorption Rate Of Human Exposure To Radio Frequency Fields From Hand-Held And Body-Worn Wireless Communication Devices - Part 1528: Human Models, Instrumentation And Procedures (Frequency Range of 4 MHz to 10 GHz)", October 2020.
b) KDB 865664, "SAR Measurement Requirements for 100 MHz to 6 GHz"

Additional Documentation:

c) DASY System Handbook

Methods Applied and Interpretation of Parameters:

- *Measurement Conditions:* Further details are available from the Validation Report at the end of the certificate. All figures stated in the certificate are valid at the frequency indicated.
- *Antenna Parameters with TSL:* The source is mounted in a touch configuration below the center marking of the flat phantom.
- *Return Loss:* This parameter is measured with the source positioned under the liquid filled phantom (as described in the measurement condition clause). The Return Loss ensures low reflected power. No uncertainty required.
- *SAR measured:* SAR measured at the stated antenna input power.
- *SAR normalized:* SAR as measured, normalized to an input power of 1 W at the antenna connector.
- *SAR for nominal TSL parameters:* The measured TSL parameters are used to calculate the nominal SAR result.

The reported uncertainty of measurement is stated as the standard uncertainty of measurement multiplied by the coverage factor k=2, which for a normal distribution corresponds to a coverage probability of approximately 95%.