FCC DFS TEST REPORT

FCC ID	:	**IHDT56AX7**
Equipment	:	**Mobile Cellular Phone**
Brand Name	:	**Motorola**
Model Name	:	**XT2761-1, XT2761-2, XT2761-3, XT2761V**
Applicant	:	**Motorola Mobility LLC 222 W. Merchandise Mart Plaza, Chicago, IL 60654, USA**
Manufacturer	:	**Motorola Mobility LLC 222 W. Merchandise Mart Plaza, Chicago, IL 60654, USA**
Standard	:	**FCC Part 15 Subpart E §15.407 DFS**

The product was received on Aug. 13, 2026 and testing was performed from Aug. 25, 2026 to Aug. 26, 2026. We, Sporton International Inc. Wensan Laboratory, would like to declare that the tested sample has been evaluated in accordance with the test procedures and has been in compliance with the applicable technical standards.

The test results in this report apply exclusively to the tested model / sample. Without written approval from Sporton International Inc. Wensan Laboratory, the test report shall not be reproduced except in full.

Louis Wu

Approved by: Louis Wu

Sporton International Inc. Wensan Laboratory
No.58, Aly. 75, Ln. 564, Wenhua 3rd, Rd., Guishan Dist., Taoyuan City 333010,

Table of Contents

History of this test report **3**
Summary of Test Result **4**
1 General Description **5**
1.1 Product Feature of Equipment Under Test 5
1.2 Modification of EUT 6
1.3 Testing Location 6
1.4 Applied Standards 7
1.5 Support Unit used in test configuration and system 7
2 Requirements and Parameters for DFS Test **8**
2.1 Summary of Dynamic Frequency Selection Test 8
2.2 Applicability of DFS Requirements 9
2.3 Interference Threshold values, Master or Client incorporating In-Service Monitoring 10
2.4 DFS Response requirement values 10
2.5 Short Pulse Radar Test Waveforms 11
3 Calibration Setup and DFS Test Results **12**
3.1 Calibration of Radar Waveform 12
3.2 In-Service Monitoring: Channel Move Time, Channel Closing Transmission Time and Non-Occupancy Period 14
4 List of Measuring Equipment **20**

History of this test report

Report No.	Version	Description	Issue Date
FZ672112	01	Initial issue of report	Sep. 29, 2026

Summary of Test Result

Report Clause	Ref Std. Clause	Test Items	Result (PASS/FAIL)	Remark
3.2	FCC Part 15 Subpart E §15.407 (h) DFS	Channel Move Time	Pass	1.270 sec
		Channel Closing Transmission time	Pass	<200ms + 5.6 ms (aggregate)
		Non-Occupancy Period and Client Beacon Test	Pass	No transmission or Beacons occurred

Note: Since the product is client without radar detection function, only Channel Move Time, Channel Closing Transmission Time and Non-Occupancy Period Test are required to be performed.

Conformity Assessment Condition:
The test results (PASS/FAIL) with all measurement uncertainty excluded are presented against the regulation limits or in accordance with the requirements stipulated by the applicant/manufacturer who shall bear all the risks of non-compliance that may potentially occur if measurement uncertainty is taken into account.
Disclaimer:
The product specifications of the EUT presented in the test report that may affect the test assessments are declared by the manufacturer who shall take full responsibility for the authenticity.

Reviewed by: Keven Cheng

Report Producer: Freda Wu

1 General Description

1.1 Product Feature of Equipment Under Test

Product Specification subject to this standard	
General Specs	GSM/WCDMA/LTE/5G NR, Bluetooth, Wi-Fi 2.4GHz 802.11b/g/n/ax/be, Wi-Fi 5GHz 802.11a/n/ac/ax/be, Wi-Fi 6GHz 802.11a/ax/be, NFC, WPT, UWB and GNSS.
Antenna Type subject to this standard	WLAN: Loop Antenna

Remark:

1. The above EUT's information was declared by manufacturer. Please refer to the specifications or user's manual for more detailed description.
2. There are four models for two samples, the differences could be referred to the product equality declaration is exhibited separately.

Sample #	Model name	Note
1	XT2761-2, XT2761-3, XT2761V	The different model names are different for market purpose
2	XT2761-1	-

According to the difference, we choose sample 1 to full test.

EUT Information List	
IMEI	Performed Test Item
358673600020590 358673600020608	DFS

Specification of Accessory				
AC Adapter 1 (US)	**Brand Name**	Motorola(AOHAI)	**Model Name**	MC-601
AC Adapter 1 (EU)	**Brand Name**	Motorola(AOHAI)	**Model Name**	MC-602
AC Adapter 1 (UK)	**Brand Name**	Motorola(AOHAI)	**Model Name**	MC-603
AC Adapter 1 (AR)	**Brand Name**	Motorola(AOHAI)	**Model Name**	MC-606
AC Adapter 1 (BR)	**Brand Name**	Motorola(AOHAI)	**Model Name**	MC-607
AC Adapter 1 (CHILE)	**Brand Name**	Motorola(AOHAI)	**Model Name**	MC-609
AC Adapter 2 (IN)	**Brand Name**	Motorola(AOHAI)	**Model Name**	MC-604
AC Adapter 3 (US)	**Brand Name**	Motorola(Chenyang)	**Model Name**	MC-601
AC Adapter 3 (EU)	**Brand Name**	Motorola(Chenyang)	**Model Name**	MC-602
AC Adapter 3 (UK)	**Brand Name**	Motorola(Chenyang)	**Model Name**	MC-603
AC Adapter 3 (AR)	**Brand Name**	Motorola(Chenyang)	**Model Name**	MC-606
AC Adapter 3 (BR)	**Brand Name**	Motorola(Chenyang)	**Model Name**	MC-607
AC Adapter 3 (CHILE)	**Brand Name**	Motorola(Chenyang)	**Model Name**	MC-609
AC Adapter 4 (IN)	**Brand Name**	Motorola(Chenyang)	**Model Name**	MC-604
Battery 1	**Brand Name**	Motorola(ATL)	**Model Name**	TP21
Battery 2	**Brand Name**	Motorola(ATL)	**Model Name**	TP29
USB Cable 1	**Brand Name**	Motorola(CABLETECH)	**Model Name**	SC18E05246
USB Cable 2	**Brand Name**	Motorola(SAIBAO)	**Model Name**	SC18D86732
Protective case 1	**Brand Name**	Motorola(Xinxiu)	**Model Name**	SS68F42393
Protective case 2	**Brand Name**	Motorola(Xinxiu)	**Model Name**	SS68F42394
Protective case 3	**Brand Name**	Motorola(Xinxiu)	**Model Name**	SS68F45123
Protective case 4	**Brand Name**	Motorola(Xinxiu)	**Model Name**	SS68F45124

1.2 Modification of EUT

No modifications are made to the EUT during all test items.

1.3 Testing Location

The test location is accredited based on TAF code 3786 designated by NCC (National Communication Commission).

Test Site	Sporton International Inc. Wensan Laboratory
Test Site Location	No.58, Aly. 75, Ln. 564, Wenhua 3rd, Rd., Guishan Dist., Taoyuan City 333010

FCC designation No.: TW3786

1.4 Applied Standards

According to the specifications of the manufacturer, the EUT must comply with the requirements of the following standards:

- FCC Part 15 Subpart E §15.407 DFS
- FCC KDB 905462 D02 UNII DFS Compliance Procedures New Rules v02
- FCC KDB 905462 D03 UNII Clients Without Radar Detection New Rules v01r02

Remark:

1. All test items were verified and recorded according to the standards and without any deviation during the test.
2. The TAF code is not including all the FCC KDB listed without accreditation.

1.5 Support Unit used in test configuration and system

Item	Equipment	Brand Name	Model Name	FCC ID	HW / FW Version	Power Cord
1.	WLAN AP	ASUS	RT-BE92U	MSQ-RTBE7L00	FW: 3.0.0.6.102_32526	Unshielded, 1.8 m
2.	Notebook	acer	N15C1	PPD-QCNFA435	N/A	AC I/P: Unshielded, 1.2 m DC O/P: Shielded, 1.8 m

2 Requirements and Parameters for DFS Test

2.1 Summary of Dynamic Frequency Selection Test

Bandwidth and Channel	Test Items	Limit
160MHz / 5570MHz (CH114)		
160MHz / 5570MHz (CH114)	Channel Move Time	10 sec
	Channel Closing Transmission time	200 ms + aggregate of 60 ms over remaining 10 s period
	Non-Occupancy Period and Client Beacon Test	30 minutes

2.2 Applicability of DFS Requirements

EUT is client and operates as client without radar detection function.

Table 1: Applicability of DFS Requirements Prior to Use of a Channel

Requirement	Operational Mode		
	Master	Client Without Radar Detection	Client With Radar Detection
Non-Occupancy Period	Yes	Not required	Yes
DFS Detection Threshold	Yes	Not required	Yes
Channel Availability Check Time	Yes	Not required	Not required
U-NII Detection Bandwidth	Yes	Not required	Yes

Table 2: Applicability of DFS requirements during normal operation

Requirement	Operational Mode		
	Master	Client Without Radar Detection	Client With Radar Detection
DFS Detection Threshold	Yes	Not required	Yes
Channel Closing Transmission Time	Yes	Yes	Yes
Channel Move Time	Yes	Yes	Yes
U-NII Detection Bandwidth	Yes	Not required	Yes
Client Beacon Test	N/A	Yes	Yes

Additional requirements for devices with multiple bandwidth modes	Operational Mode	
	Master or Client With Radar Detection	Client Without Radar Detection
U-NII Detection Bandwidth and Statistical Performance Check	All BW modes must be tested	Not required
Channel Move Time and Channel Closing Transmission Time	Test using widest BW mode available	Test using the widest BW mode available for the link
All other tests	Any single BW mode	Not required

Note
Frequencies selected for statistical performance check (Section 7.8.4) should include several frequencies within the radar detection bandwidth and frequencies near the edge of the radar detection bandwidth. For 802.11 devices it is suggested to select frequencies in each of the bonded 20 MHz channels and the channel center frequency.

2.3 Interference Threshold values, Master or Client incorporating In-Service Monitoring

Maximum Transmit Power	Value (see notes 1 and 2)
≥ 200 milliwatt	-64 dBm
< 200 milliwatt	-62 dBm
Note 1: This is the level at the input of the receiver assuming a 0 dBi receive antenna. **Note 2:** Throughout these test procedures an additional 1 dB has been added to the amplitude of the test transmission waveforms to account for variations in measurement equipment. This will ensure that the test signal is at or above the detection threshold level to trigger a DFS response.	

The radar *Detection Threshold*, lowest antenna gain is the parameter of Interference *radar DFS detection threshold*, The Interference *Detection Threshold* is the *(-62dBm) + (0)* [dBi]+ 1 dB= -61 dBm.

2.4 DFS Response requirement values

Parameter	Value
Non-occupancy period	Minimum 30 minutes
Channel Availability Check Time	60 seconds
Channel Move Time	10 seconds See Note 1.
Channel Closing Transmission Time	200 milliseconds + an aggregate of 60 milliseconds over remaining 10 second period. See Notes 1 and 2.
U-NII Detection Bandwidth	Minimum 100% of the 99% power bandwidth See Note 3.
Note 1: The instant that the *Channel Move Time* and the *Channel Closing Transmission Time* begins is as follows: • For the Short pulse radar Test Signals this instant is the end of the *Burst*. • For the Frequency Hopping radar Test Signal, this instant is the end of the last radar *Burst* generated. • For the Long Pulse radar Test Signal this instant is the end of the 12 second period defining the radar transmission. **Note 2:** The *Channel Closing Transmission Time* is comprised of 200 milliseconds starting at the beginning of the *Channel Move Time* plus any additional intermittent control signals required to facilitate *Channel* changes (an aggregate of 60 milliseconds) during the remainder of the 10 second period. The aggregate duration of control signals will not count quiet periods in between transmissions. **Note 3:** During the *U-NII Detection Bandwidth* detection test, radar type 0 is used and for each frequency step the minimum percentage of detection is 90%. Measurements are performed with no data traffic.	

2.5 Short Pulse Radar Test Waveforms

As the EUT is a Client Device with no Radar Detection, only one type radar pulse is required for the testing. Radar Pulse type 0 was used in the evaluation of the Client device for the purpose of measuring the Channel Move Time and the Channel Closing Transmission Time.

Radar Type	Pulse Width (μsec)	PRI (μsec)	Number of Pulses	Minimum Percentage of Successful Detection	Minimum Trials
0	1	1428	18	60%	30
1	1	Test A Test B	$\text{Roundup}\left\{\left(\frac{1}{360}\right)\cdot\left(\frac{19\cdot 10^6}{\text{PRI}_{\mu\text{sec}}}\right)\right\}$	60%	30
2	1-5	150-230	23-29	60%	30
3	6-10	200-500	16-18	60%	30
4	11-20	200-500	12-16	60%	30
Aggregate (Radar Types 1-4)				80%	120

Test A: 15 unique PRI values randomly selected from the list of 23 PRI values in Table 5a
Test B: 15 unique PRI values randomly selected within the range of 518-3066 μsec, with a minimum increment of 1 μsec, excluding PRI values selected in Test A

A minimum of 30 unique waveforms are required for each of the short pulse radar types 2 through 4. For short pulse radar type 1, the same waveform is used a minimum of 30 times. If more than 30 waveforms are used for short pulse radar types 2 through 4, then each additional waveform must also be unique and not repeated from the previous waveforms.

If more than 30 waveforms are used for Short Pulse Radar Type 1, then each additional waveform is generated with Test B and must also be unique and not repeated from the previous waveforms in Tests A or B.

The aggregate is the average of the percentage of successful detections of short pulse radar types 1-4.

3 Calibration Setup and DFS Test Results

3.1 Calibration of Radar Waveform

3.1.1 Radar Waveform Calibration Procedure

The Interference **Radar Detection Threshold Level** is *(-62dBm)* + *(0)* [dBi]+ 1 dB= -61dBm that had been taken into account the output power range and antenna gain. The following equipment setup was used to calibrate the radiated Radar Waveform. A vector signal generator was utilized to establish the test signal level for radar type 0. During this process there were no transmissions by either the Master or Client Device. The spectrum analyzer was switched to the zero span (Time Domain) at the frequency of the Radar Waveform generator. Peak detection was used. The spectrum analyzer resolution bandwidth (RBW) and video bandwidth (VBW) were set to 3 MHz to measure the type 0 radar waveform. The spectrum analyzer had offset to compensate and RF cable loss. The vector signal generator amplitude was set so that the power level measured at the spectrum analyzer was *(-62dBm)* + *(0)* [dBi]+ 1 dB= -61 dBm. Capture the spectrum analyzer plots on short pulse radar waveform.

3.1.2 Conducted Setup

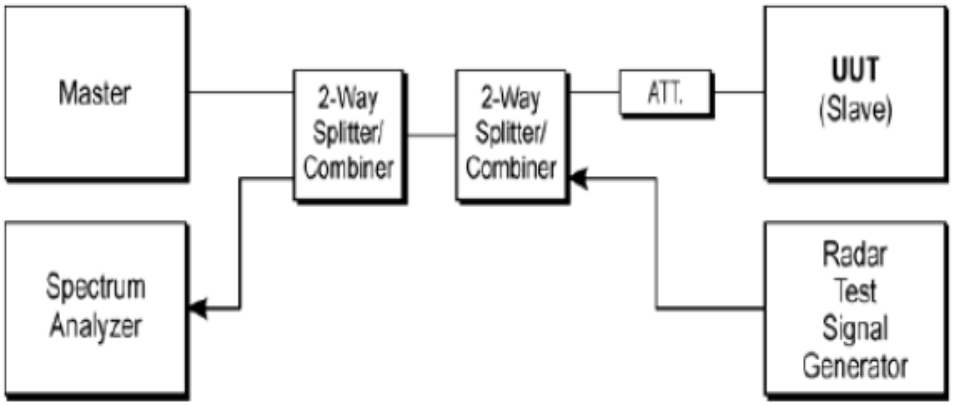

3.1.3 Calibration Deviation

There is no deviation with the original standard.

3.1.4 Radar Waveform Calibration Result

160MHz / 5570MHz (CH114) Radar Type 0
Radar / DFS detection threshold level and the burst of pulses on the Channel frequency

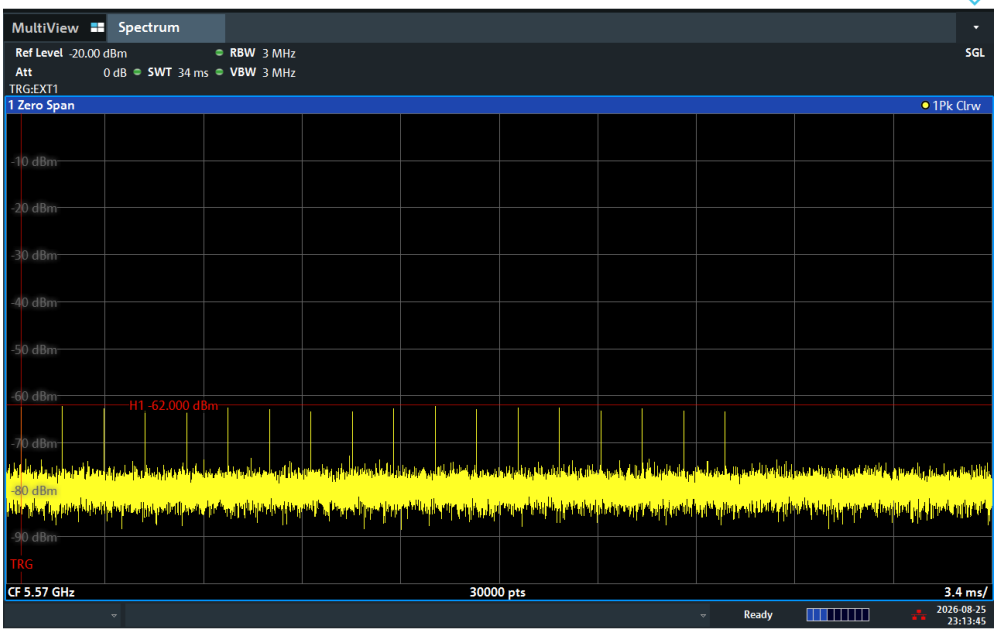

11:13:45 PM 08/25/2026

3.2 In-Service Monitoring: Channel Move Time, Channel Closing Transmission Time and Non-Occupancy Period

3.2.1 Limit of In-Service Monitoring

The EUT has In-Service Monitoring function to continuously monitor the radar signals, If radar is detected, it must leave the channel (Shutdown). The Channel Move Time to cease all transmissions on the current Channel upon detection of a Radar Waveform above the DFS Detection Threshold within 10 sec. The total duration of *Channel Closing Transmission Time* is comprised of 200 milliseconds starting at the beginning of the *Channel Move Time* plus any additional intermittent control signals required to facilitate *Channel* changes (an aggregate of 60 milliseconds) during the remainder of the 10 second period. The aggregate duration of control signals will not count quiet periods in between transmissions.

Non-Occupancy Period time is 30 minute during which a Channel will not be utilized after a Radar Waveform is detected on that Channel. The non-associated Client Beacon Test is during the 30 minutes observation time. The EUT should not make any transmissions in the DFS band after EUT power up.

3.2.2 Test Procedures

1. The radar pulse generator is setup to provide a pulse at frequency that the Master and Client are operating. A type 0 radar pulse with a 1us pulse width and a 1428 us PRI is used for the testing.
2. The vector signal generator is adjusted to provide the radar burst (18 pulses) at a level of approximately -62dBm at the antenna of the Master device.
3. A trigger is provided from the pulse generator to the DFS monitoring system in order to capture the traffic and the occurrence of the radar pulse.
4. A U-NII device operating as a Client Device will associate with the Master at Channel. The MPEG file “TestFile.mpg” specified by the FCC is streamed from the “file computer” through the Master to the Client Device and played in full motion video using Media Player Classic Ver. 6.4.8.6 in order to properly load the network for the entire period of the test.
5. When a radar Burst with a level equal to the DFS Detection Threshold + 1dB is generated on the Operating Channel of the U-NII device. At time T0 the Radar Waveform generator sends a Burst of pulse of the radar waveform at Detection Threshold + 1dB.
6. Observe the transmissions of the EUT at the end of the radar Burst on the Operating Channel. Measure and record the transmissions from the EUT during the observation time (Channel Move Time). One 12 seconds plot is reported for the Short Pulse Radar Types 0. The plot for the Short Pulse Radar Types start at the end of the radar burst. The Channel Move Time will be calculated based on the zoom in 600ms plot of the Short Pulse Radar Type.
7. Measurement of the aggregate duration of the Channel Closing Transmission Time method. With the spectrum analyzer set to zero span tuned to the center frequency of the EUT operating channel at the radar simulated frequency, peak detection, and max hold, the dwell time per bin is given by: **Dwell (0.4ms)= S (12000ms) / B (30000)**; where Dwell is the dwell time per spectrum analyzer sampling bin, S is the sweep time and B is the number of spectrum analyzer sampling bins. An upper bound of the aggregate duration of the intermittent control signals of Channel Closing Transmission Time is calculated by: **C (ms)= N X Dwell (0.4 ms)**; where C is the Closing Time, N is the number of spectrum analyzer sampling bins (intermittent control signals) showing a U-NII transmission and Dwell is the dwell time per bin.
8. Measure the EUT for more than 30 minutes following the channel move time to verify that no transmissions or beacons occur on this Channel.
9. The test frequency , bandwidth and data rate as following table:

BW / Channel	Test Data Rate
160MHz / 5570MHz (CH114)	MCS0

3.2.3 Test Setup

Conducted Setup Photo

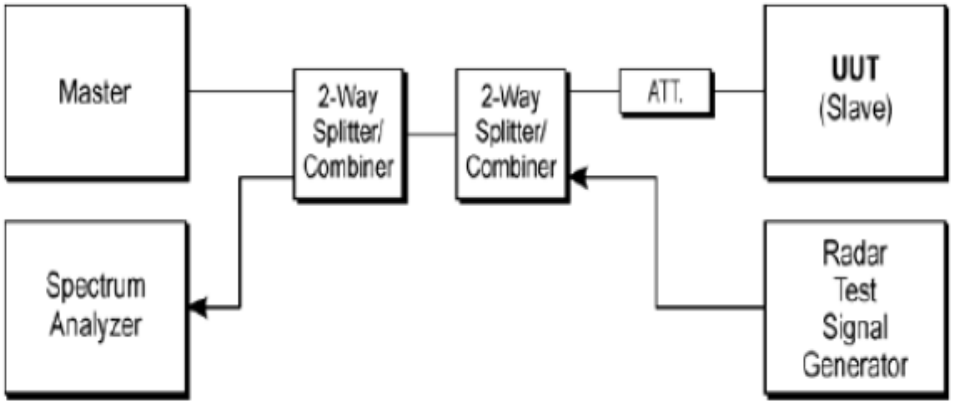

3.2.4 Test Deviation

There is no deviation with the original standard.

3.2.5 Result of Channel Move Time, Channel Closing Transmission Time and Non-Occupancy Period for Client Beacon Test

Test Mode :	Client without radar detection	**Temperature :**	21.2~23.2℃
Test Engineer :	Ray Wang	**Relative Humidity :**	51.5~56.5%

BW / Channel	Test Item	Test Result	Limit	Pass/Fail
160MHz / 5570MHz (CH114)	Channel Move Time	1.270 s	< 10s	Pass
	Channel Closing Transmission Time	200ms + 5.6 ms	< 260ms	Pass
	Non-Occupancy Period	≥ 30	≥ 30 min	Pass

Note: The Channel Closing Transmission Time is comprised of 200 milliseconds starting at the beginning of the Channel Move Time plus any additional intermittent control signals required to facilitate a Channel move (an aggregate of 60 milliseconds) during the remainder of the 10 seconds period. The aggregate duration of control signals will not count quiet periods in between transmissions.

3.2.6 Channel Move Time, Channel Closing Transmission Time and Non-Occupancy Period for Client Beacon Test Plots

<160MHz / 5570MHz (CH114)> In-Service Monitoring	
Channel Move Time & Channel Closing Transmission Time	
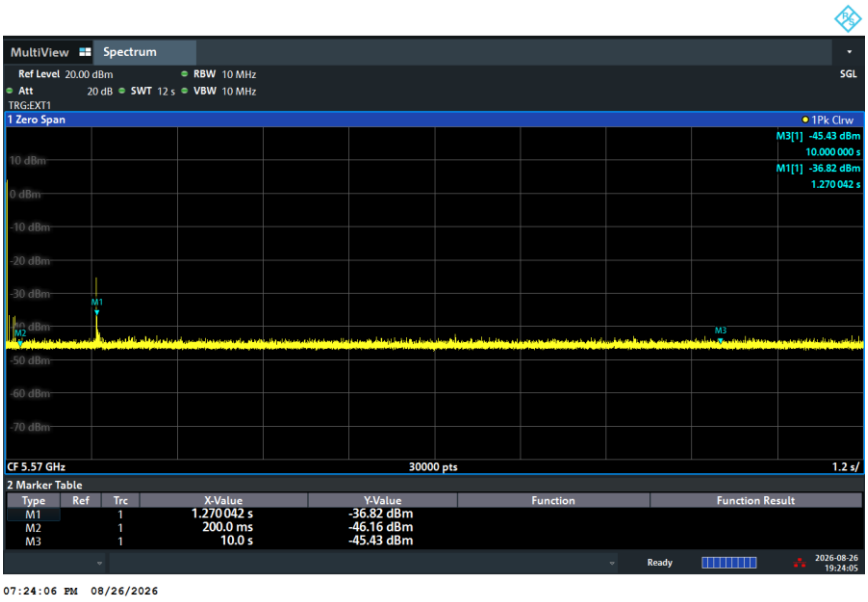	
Non-Occupancy Period	**Non-associated test** **Master was off. (beacon test)**
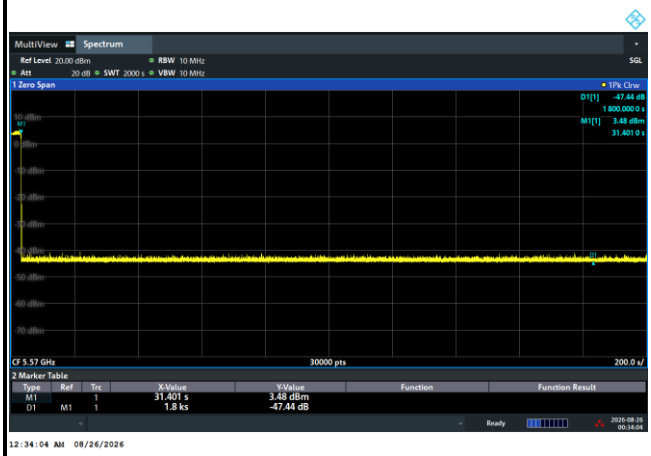	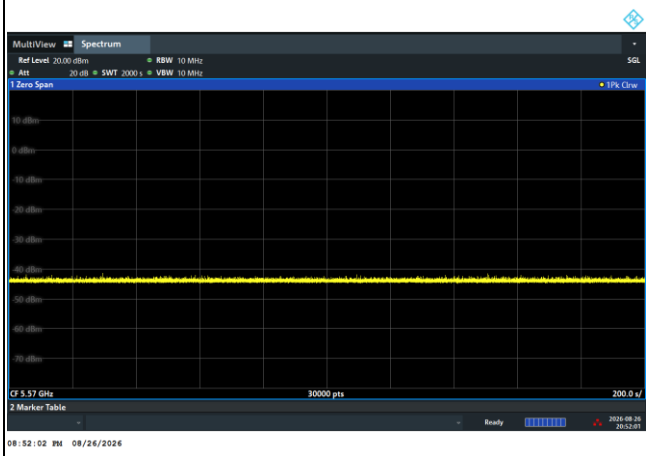
Note: Dwell (0.4 ms)= Sweep Time (12000 ms) / Sweep Point Bins (30000) Channel Closing Transmission Time (200 + 5.6 ms) = 200 + Number (14) X Dwell (0.4 ms) < 260ms	

3.2.7 Data Traffic and Noise Floor Plots

EUT data traffic (Client)

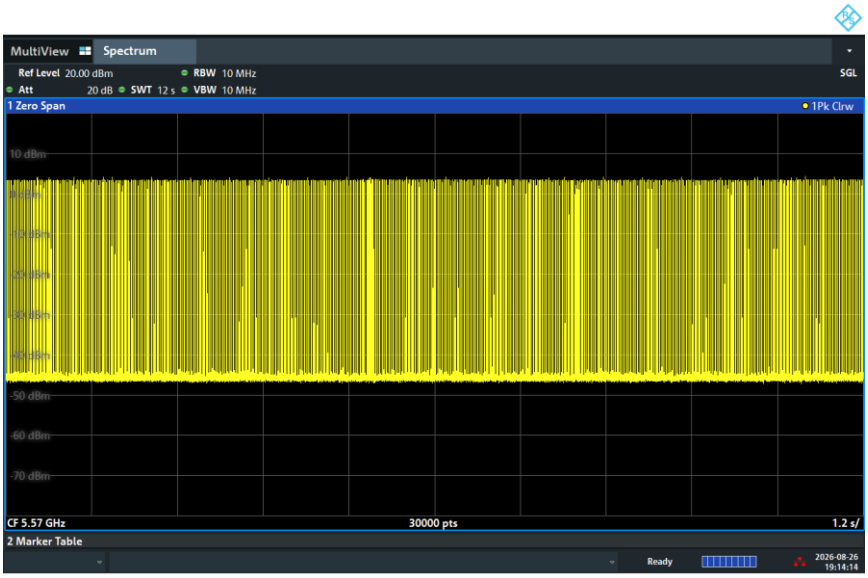

07:14:14 PM 08/26/2026

Noise Floor (No transmission)

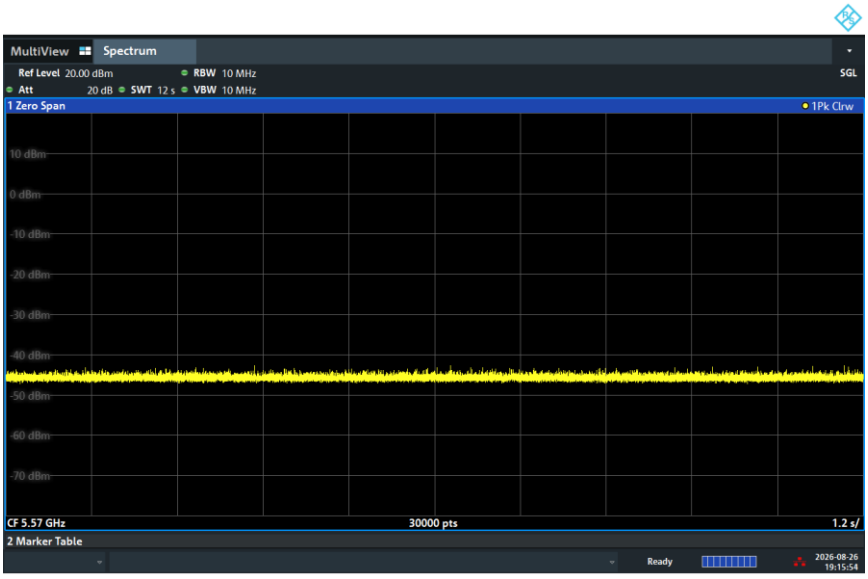

07:15:55 PM 08/26/2026

4 List of Measuring Equipment

Instrument	Brand Name	Model No.	Serial No.	Characteristics	Calibration Date	Test Date	Due Date	Remark
MXG Vector Signal Generator	Keysight	N5182B	MY56200377	9kHz~6GHz	Apr. 15, 2026	Aug. 25, 2026~ Aug. 26.2026	Apr. 14, 2027	DFS (DF02-HY)
Spectrum Analyzer	Rohde & Schwarz	FSV3013	101549	10Hz~13.6GHz	Dec. 18, 2025	Aug. 25, 2026~ Aug. 26.2026	Dec. 17, 2026	DFS (DF02-HY)
Power Divider	Woken	2Way Divider	DCMB1KW7A1	0.5GHz-18GHz	Jul. 13, 2026	Aug. 25, 2026~ Aug. 26.2026	Jul. 12, 2027	DFS (DF02-HY)
Power Divider	Woken	3Way SMA Power Divider Rated to 20W	STI08-0010(#4)	2GHz-8GHz	Jul. 13, 2026	Aug. 25, 2026~ Aug. 26.2026	Jul. 12, 2027	DFS (DF02-HY)
Power Divider	MTJ	SMA 2Way Power Divider	MD10007	0.5GHz-8GHz	Aug. 12, 2026	Aug. 25, 2026~ Aug. 26.2026	Aug. 11, 2027	DFS (DF02-HY)
Power Divider	MTJ	SMA 2Way Power Divider	MD10011	0.5GHz-6GHz	Aug. 12, 2026	Aug. 25, 2026~ Aug. 26.2026	Aug. 11, 2027	DFS (DF02-HY)
RF Cable	E-Instument	SS405	SS405-150cm-#11	0.5-18GHz	Jul. 13, 2026	Aug. 25, 2026~ Aug. 26.2026	Jul. 12, 2027	DFS (DF02-HY)
Software 1	Sporton	DFS & Adaptivity Tools	N/A	Ver 1.0	NCR	Aug. 25, 2026~ Aug. 26.2026	NCR	DFS (DF02-HY)
Software 2	Keysight	Keysight Signal Studio for DFS Radar Profiles	N/A	Ver 1.5.5.0	NCR	Aug. 25, 2026~ Aug. 26.2026	NCR	DFS (DF02-HY)