FCC RF Test Report

APPLICANT	:	Motorola Mobility, LLC
EQUIPMENT	:	Mobile Cellular Phone
BRAND NAME	:	Motorola
MODEL NAME	:	4603
FCC ID	:	IHDT56UB2
STANDARD	:	FCC Part 15 Subpart C §15.225
CLASSIFICATION	:	(DXX) Low Power Communication Device Transmitter

The product was received on May 01, 2015. We, SPORTON INTERNATIONAL INC., would like to declare that the tested sample has been evaluated in accordance with the test procedures and has been in compliance with the applicable technical standards.

The test results in this report apply exclusively to the tested model / sample. Without written approval of SPORTON INTERNATIONAL INC., the test report shall not be reproduced except in full.

Reviewed by: Joseph Lin / Supervisor

Approved by: Jones Tsai / Manager

Testing Laboratory 1190

SPORTON INTERNATIONAL INC.

No. 52, Hwa Ya 1st Rd., Hwa Ya Technology Park, Kwei-Shan District, Tao Yuan City, Taiwan, R.O.C.

TABLE OF CONTENTS

REVISION HISTORY **3**

1. GENERAL INFORMATION **4**

1.1 Applicant 4
1.2 Manufacturer 4
1.3 Feature of Equipment Under Test 4
1.4 Product Details 4
1.5 Modification of EUT 4

APPENDIX A. ORIGINAL REPORT

REVISION HISTORY

REPORT NO.	VERSION	DESCRIPTION	ISSUED DATE
FR550147-02D	Rev. 01	The NFC circuitry of this variant model (4603) is identical to that of the parent product (4602), based on the product equality declaration by the manufacturer.	Jul. 08, 2015

1. GENERAL INFORMATION

1.1 Applicant

Motorola Mobility, LLC

222 W Merchandise Mart Plaza, Suite 1800, Chicago, IL 60654, United States

1.2 Manufacturer

Motorola Mobility, LLC

222 W Merchandise Mart Plaza, Suite 1800, Chicago, IL 60654, United States

1.3 Feature of Equipment Under Test

Product Feature	
Equipment	Mobile Cellular Phone
Brand Name	Motorola
FCC Model Name	4603
FCC ID	IHDT56UB2
EUT supports Radios application	GSM/EGPRS/WCDMA/HSPA/LTE/NFC/FM 2.4GHz WLAN 11b/g/n HT20 5GHz WLAN 11a/n HT20/HT40 Bluetooth v2.1 EDR Bluetooth v4.1 - LE
HW Version	P2
EUT Stage	Identical Prototype

1.4 Product Details

Items	Description
Tx/Rx Frequency Range	13.553 ~ 13.567MHz
Channel Number	1
Antenna Type	Coil / embeded Antenna
Type of Modulation	ASK

Remark: The above EUT's information was declared by manufacturer. Please refer to the specifications or user's manual for more detailed description.

1.5 Modification of EUT

No modifications are made to the EUT during all test items.

Appendix A. Original Report

Please refer to Sporton report number FR550147D as below.

FCC RF Test Report

APPLICANT	:	Motorola Mobility, LLC
EQUIPMENT	:	Mobile Cellular Phone
BRAND NAME	:	Motorola
MODEL NAME	:	4602
FCC ID	:	IHDT56UB1
STANDARD	:	FCC Part 15 Subpart C §15.225
CLASSIFICATION	:	(DXX) Low Power Communication Device Transmitter

The testing was completed on Jun. 09, 2015. We, SPORTON INTERNATIONAL INC., would like to declare that the tested sample has been evaluated in accordance with the test procedures and has been in compliance with the applicable technical standards.

The test results in this report apply exclusively to the tested model / sample. Without written approval of SPORTON INTERNATIONAL INC., the test report shall not be reproduced except in full.

Reviewed by: Joseph Lin / Supervisor

Approved by: Jones Tsai / Manager

Testing Laboratory 1190

SPORTON INTERNATIONAL INC.

No. 52, Hwa Ya 1st Rd., Hwa Ya Technology Park, Kwei-Shan District, Tao Yuan City, Taiwan, R.O.C.

Table of Contents

SUMMARY OF THE TEST RESULT 4

1. GENERAL INFORMATION 5

1.1 Applicant 5
1.2 Manufacturer 5
1.3 Product Details 5
1.4 Modification of EUT 5
1.5 Testing Location 6
1.6 Applicable Standards 6
1.7 Test Modes 6
1.8 Test Configurations 7
1.9 Table for Supporting Units 9

2. CONDUCTED EMISSION TEST 10

2.1 Measuring Instruments 10
2.2 Test setup 10
2.3 Test Result of Conducted Emission Test 10
2.4 AC Power Line Conducted Emissions Measurement 11

3. CONDUCTED TEST ITEMS 12

3.1 Measuring Instruments 12
3.2 Test Setup 12
3.3 Test Result of Conducted Test Items 12
3.4 20dB Spectrum Bandwidth Measurement 13
3.5 Frequency Stability Measurement 13

4. RADIATED TEST ITEMS 14

4.1 Measuring Instruments 14
4.2 Test Setup 14
4.3 Test Result of Radiated Test Items 14
4.4 Field Strength of Fundamental Emissions and Mask Measurement 15
4.5 Radiated Emissions Measurement 16

5. LIST OF MEASURING EQUIPMENT 18

APPENDIX A. TEST RESULTS OF CONDUCTED EMISSION TEST

APPENDIX B. TEST RESULTS OF CONDUCTED TEST ITEMS

B.1 Test Result of 20dB Spectrum Bandwidth
B.2 Test Result of Frequency Stability

APPENDIX C. TEST RESULTS OF RADIATED TEST ITEMS

C.1 Test Result of Field Strength of Fundamental Emissions
C.2 Results of Radiated Emissions (9 kHz~30MHz)
C.3 Results of Radiated Emissions (30MHz~1GHz)

REVISION HISTORY

REPORT NO.	VERSION	DESCRIPTION	ISSUED DATE
FR550147D	Rev. 01	Initial issue of report	Jun. 22, 2015

SUMMARY OF THE TEST RESULT

Applied Standard: 47 CFR FCC Part 15 Subpart C				
Part	**FCC Rule**	**Description of Test**	**Result**	**Under Limit**
3.1	15.207	AC Power Line Conducted Emissions	Complies	3.60 dB at 13.558MHz
3.2	15.225(a)(b)(c)	Field Strength of Fundamental Emissions	Complies	66.91 dB at 13.560 MHz
3.3	2.1049	20dB Spectrum Bandwidth	Complies	-
3.4	15.225(d) 15.209	Radiated Emissions	Complies	-5.40 dB at 158.250 MHz for Peak
3.5	15.225(e)	Frequency Stability	Complies	-
3.6	15.203	Antenna Requirements	Complies	-

Test Items	Uncertainty	Remark
AC Power Line Conducted Emissions	±2.26dB	Confidence levels of 95%
Radiated Emissions (30MHz~1000MHz)	±4.70dB	Confidence levels of 95%

1. GENERAL INFORMATION

1.1 Applicant

Motorola Mobility, LLC

222 W Merchandise Mart Plaza, Suite 1800, Chicago, IL 60654, United States

1.2 Manufacturer

Motorola Mobility, LLC

222 W Merchandise Mart Plaza, Suite 1800, Chicago, IL 60654, United States

1.3 Product Details

Items	Description
Tx/Rx Frequency Range	13.553 ~ 13.567MHz
Channel Number	1
20dBW	2.64KHz
99%OBW	2.24KHz
Antenna Type	Printed circuited flex
Type of Modulation	ASK

Remark: The above EUT's information was declared by manufacturer. Please refer to the specifications or user's manual for more detailed description.

1.4 Modification of EUT

No modifications are made to the EUT during all test items.

1.5 Testing Location

Sporton Lab is accredited to ISO 17025 by Taiwan Accreditation Foundation (TAF code : 1190) and the FCC designation No. TW1022 under the FCC 2.948(e) by Mutual Recognition Agreement (MRA) in FCC Test.

Test Site	SPORTON INTERNATIONAL INC.		
Test Site Location	No. 52, Hwa Ya 1st Rd., Hwa Ya Technology Park, Kwei-Shan District, Tao Yuan City, Taiwan, R.O.C. TEL: +886-3-3273456 / FAX: +886-3-3284978		
Test Site No.	Sporton Site No.		
	TH02-HY	CO05-HY	03CH07-HY
Test Engineer	Danny Chen	Eric Jeng/Kai-Chun Chu	James Chiu
Temperature	22~24°C	21~23°C	20~24°C
Relative Humidity	53~55%	59~61%	50~55%

Note: The test site complies with ANSI C63.4 2009 requirement.

1.6 Applicable Standards

According to the specifications of the manufacturer, the EUT must comply with the requirements of the following standards:

- FCC Part 15 Subpart C §15.225
- ANSI C63.10-2009

1.7 Test Modes

Investigation has been done on all the possible configurations for searching the worst cases. The following table is a list of the test modes shown in this test report.

Test Items	
AC Power Line Conducted Emissions	Field Strength of Fundamental Emissions
20dB Spectrum Bandwidth	Frequency Stability
Radiated Emissions 9kHz~30MHz	Radiated Emissions 30MHz~1GHz

Note:

1. The EUT was programmed to be in continuously transmitting mode.
2. The ancillary equipment, NFC card, is used to make the EUT (NFC) continuously transmit at 13.56MHz and is placed around 3 cm gap to the EUT.

1.8 Test Configurations

<AC Conducted Emissions for Adapter 1>

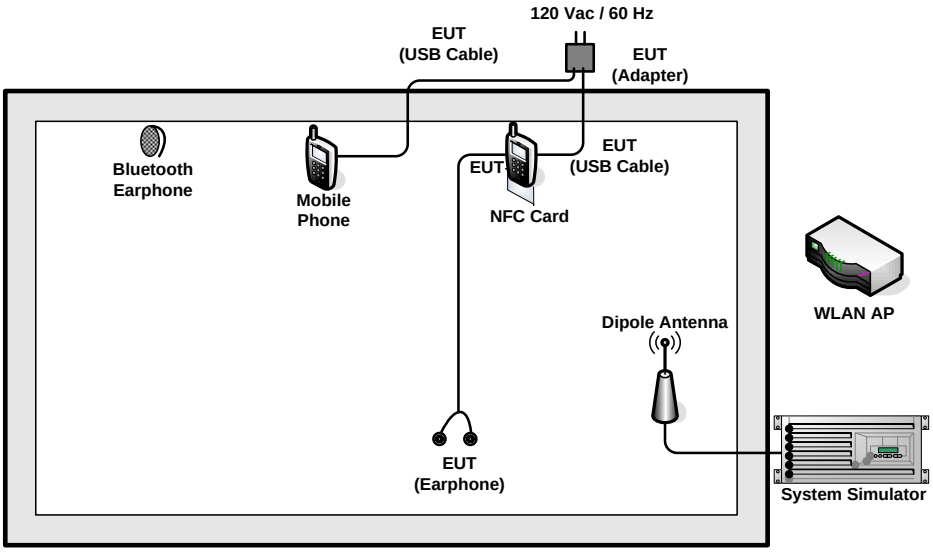

<AC Conducted Emissions for Adapter 2>

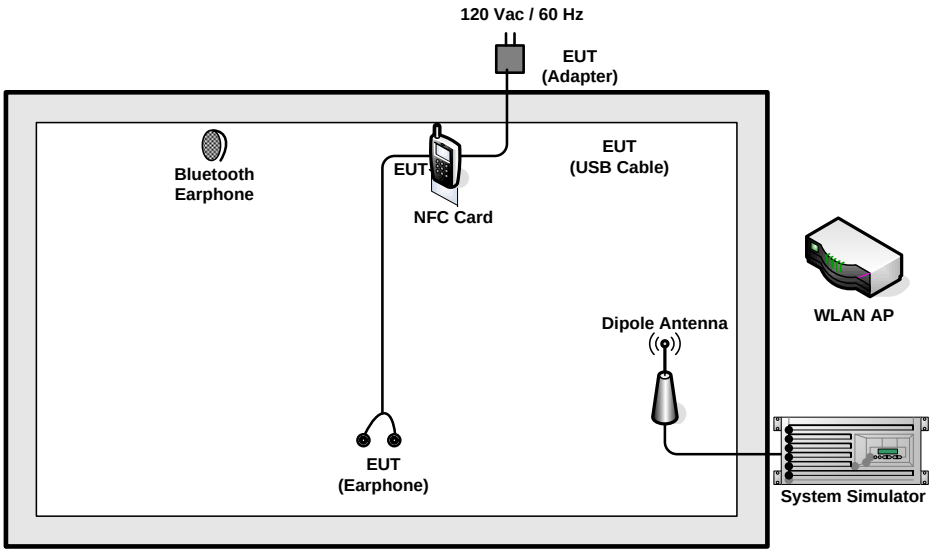

< For Fundamental Emissions and Mask and Radiated Emissions Measurement for Adapter 1 >

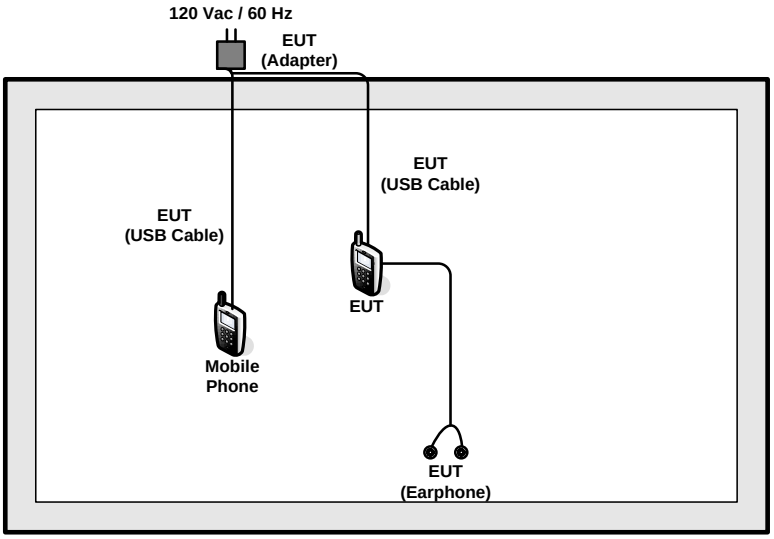

< For Fundamental Emissions and Mask and Radiated Emissions Measurement for Adapter 2 >

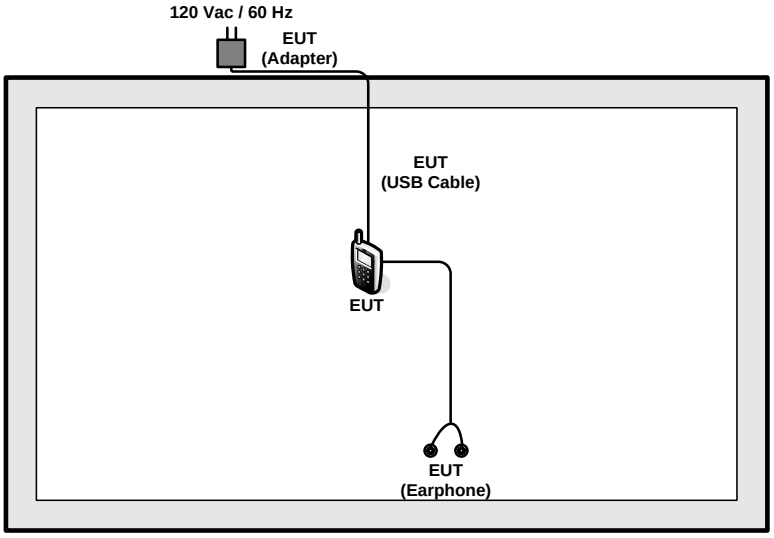

1.9 Table for Supporting Units

Support Unit	Manufacturer	Model	FCC ID	Data Cable	Power Cord
System Simulator	Anritsu	MT8820C	N/A	N/A	Unshielded, 1.8 m
WLAN AP	D-Link	DIR-628	KA2DIR628A2	N/A	Unshielded, 1.8 m
Notebook	DELL	Latitude E6320	FCC DoC/ Contains FCC ID: QDS-BRCM1054	N/A	AC I/P: Unshielded, 1.2 m DC O/P: Shielded, 1.8 m
Bluetooth Earphone	Sony Ericsson	MW600	PY7DDA-2029	N/A	N/A
Mobile Phone	Motorola	LUX VZW	N/A	N/A	N/A
SD Card	SanDisk	MicroSD HC	FCC DoC	N/A	N/A

2. CONDUCTED EMISSION TEST

2.1 Measuring Instruments

See list of measuring instruments of this test report.

2.2 Test setup

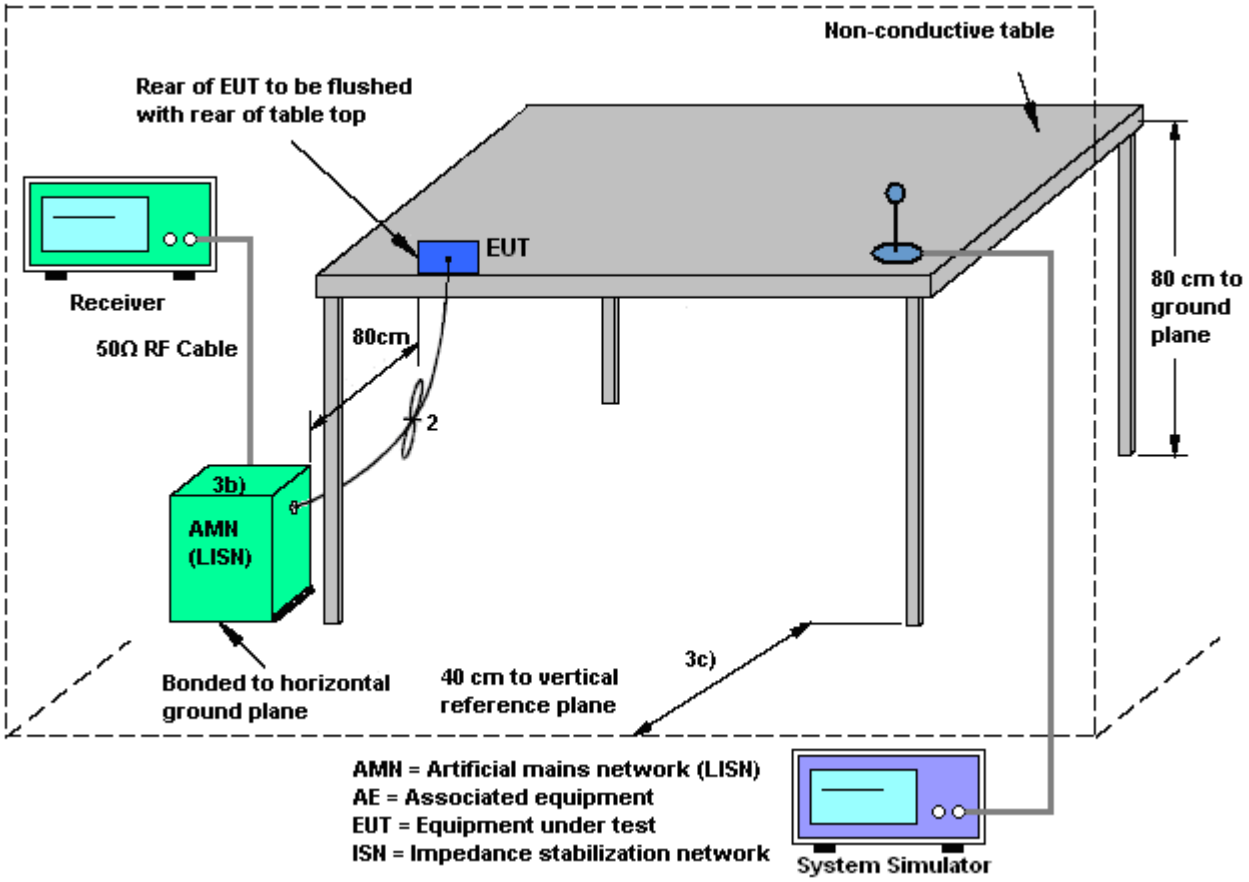

2.3 Test Result of Conducted Emission Test

Please refer to Appendix B.

2.4 AC Power Line Conducted Emissions Measurement

2.4.1 Limit

For equipment that is designed to be connected to the public utility (AC) power line, the radio frequency voltage that is conducted back onto the AC power line on any frequency or frequencies within the band 150 kHz to 30 MHz shall not exceed the limits in the following table.

Frequency of Emission (MHz)	Conducted Limit (dBμV)	
	Quasi-Peak	Average
0.15-0.5	66 to 56*	56 to 46*
0.5-5	56	46
5-30	60	50

*Decreases with the logarithm of the frequency.

2.4.2 Test Procedures

1. The EUT was placed 0.4 meter from the conducting wall of the shielding room, and it was kept at least 80 centimeters from any other grounded conducting surface.
2. Connect EUT to the power mains through a line impedance stabilization network (LISN).
3. All the support units are connecting to the other LISN.
4. The LISN provides 50 ohm coupling impedance for the measuring instrument.
5. The FCC states that a 50 ohm, 50 microhenry LISN should be used.
6. Both sides of AC line were checked for maximum conducted interference.
7. The frequency range from 150 kHz to 30 MHz was searched.
8. Set the test-receiver system to Peak Detect Function and specified bandwidth (IF Bandwidth = 9kHz) with Maximum Hold Mode. Then measurement is also conducted by Average Detector and Quasi-Peak Detector Function respectively.

3. CONDUCTED TEST ITEMS

3.1 Measuring Instruments

See list of measuring instruments of this test report.

3.2 Test Setup

3.2.1 20dB Spectrum Bandwidth

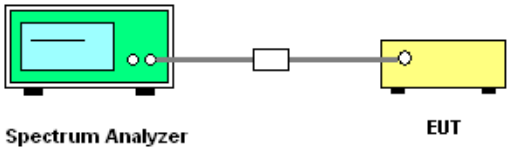

3.2.2 Frequency Stability

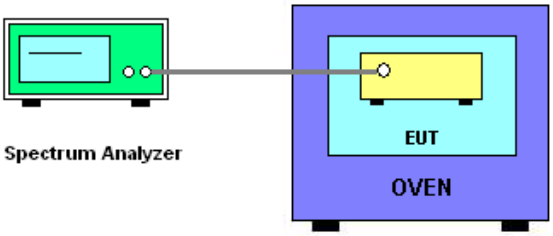

3.3 Test Result of Conducted Test Items

Please refer to Appendix C.

3.4 20dB Spectrum Bandwidth Measurement

3.4.1 Limit

Intentional radiators must be designed to ensure that the 20 dB bandwidth of the emissions in the specific band 13.553~13.567MHz

3.4.2 Test Procedures

1. The transmitter output (antenna port) was connected to the spectrum analyzer in peak Max hold mode.
2. The resolution bandwidth of 1 kHz and the video bandwidth of 3 kHz were used.
3. Measured the spectrum width with power higher than 20dB below carrier.

3.5 Frequency Stability Measurement

3.5.1 Limit

The frequency tolerance of the carrier signal shall be maintained within +/- 0.01% (100ppm) of the operating frequency over a temperature variation of -20 degrees to +50 degrees C at normal supply voltage, and for a variation in the primary supply voltage from 85% to 115% of the rated supply voltage at a temperature of 20 degrees C. For battery operated equipment, the equipment tests shall be performed using a new battery.

3.5.2 Test Procedures

1. The transmitter output (antenna port) was connected to the spectrum analyzer.
2. EUT have transmitted signal and fixed channelize.
3. Set the spectrum analyzer span to view the entire emissions bandwidth.
4. Set RBW = 1 kHz, VBW = 3 kHz with peak detector and maxhold settings.
5. The fc is declaring of channel frequency. Then the frequency error formula is $(fc-f)/fc \times 10^6$ ppm and the limit is less than ±100ppm.
6. Extreme temperature rule is -20°C~50°C.

4. RADIATED TEST ITEMS

4.1 Measuring Instruments

See list of measuring instruments of this test report.

4.2 Test Setup

4.2.1 For radiated emissions below 30MHz

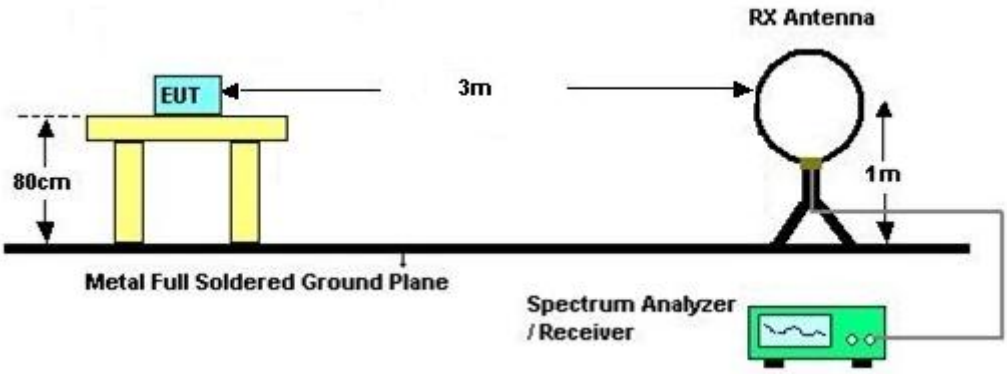

4.2.2 For radiated emissions above 30MHz

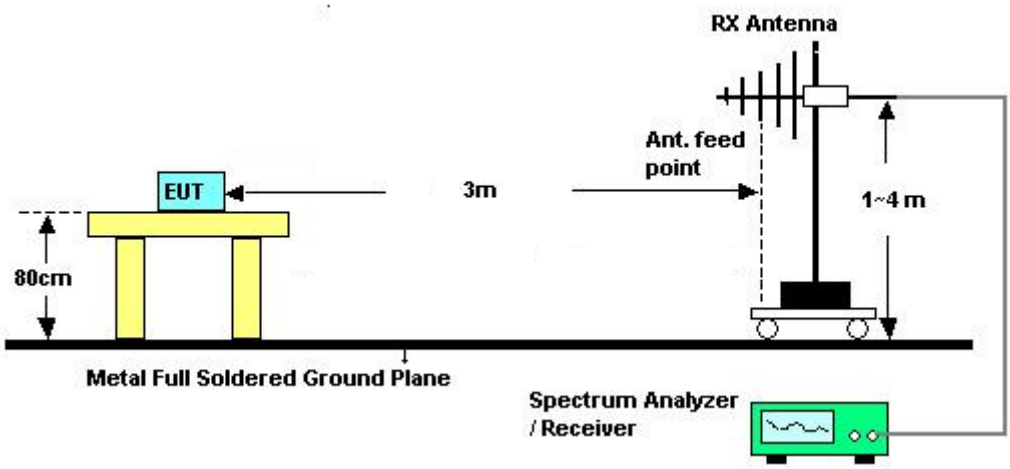

4.3 Test Result of Radiated Test Items

Please refer to Appendix D.

4.4 Field Strength of Fundamental Emissions and Mask Measurement

4.4.1 Limit

Rules and specifications	CFR 47 Part 15 section 15.225(a)-(d)			
Description	Compliance with the spectrum mask is tested using a spectrum analyzer with RBW set to a 9kHz for the band 13.553~13.567MHz			
Freq. of Emission (MHz)	Field Strength (μV/m) at 30m	Field Strength (dBμV/m) at 30m	Field Strength (dBμV/m) at 10m	Field Strength (dBμV/m) at 3m
1.705~13.110	30	29.5	48.58	69.5
13.110~13.410	106	40.5	59.58	80.5
13.410~13.553	334	50.5	69.58	90.5
13.553~13.567	15848	84.0	103.08	124.0
13.567~13.710	334	50.5	69.58	90.5
13.710~14.010	106	40.5	59.58	80.5
14.010~30.000	30	29.5	48.58	69.5

4.4.2 Test Procedures

1. Configure the EUT according to ANSI C63.4. The EUT was placed on the top of the turntable 0.8 meter above ground. The phase center of the loop receiving antenna mounted antenna tower was placed 3 meters far away from the turntable.
2. Power on the EUT and all the supporting units. The turntable was rotated by 360 degrees to determine the position of the highest radiation.
3. The height of the receiving antenna was fixed at one meter above ground to find the maximum emissions field strength.
4. For Fundamental emissions, use the receiver to measure QP reading.
5. When the radiated emissions limits are expressed in terms of the average value of the emissions, and pulsed operation is employed, the measurement field strength shall be determined by averaging over one complete pulse train, including blanking intervals, as long as the pulse train does not exceed 0.1 seconds. As an alternative (provided the transmitter operates for longer than 0.1 seconds) or in cases where the pulse train exceeds 0.1 seconds, the measured field strength shall be determined from the average absolute voltage during a 0.1 second interval during which the field strength is at its maximum value.
6. Compliance with the spectrum mask is tested using a spectrum analyzer with RBW set to a 9kHz for the band 13.553~13.567MHz.

Note: Emission level (dBμV/m) = 20 log Emission level (μV/m).

4.5 Radiated Emissions Measurement

4.5.1 Limit

The field strength of any emissions which appear outside of 13.553~13.567MHz band shall not exceed the general radiated emissions limits.

Frequencies (MHz)	Field Strength (μV/m)	Measurement Distance (meters)
0.009~0.490	2400/F(kHz)	300
0.490~1.705	24000/F(kHz)	30
1.705~30.0	30	30
30~88	100	3
88~216	150	3
216~960	200	3
Above 960	500	3

4.5.2 Measuring Instrument Setting

The following table is the setting of receiver.

Receiver Parameter	Setting
Attenuation	Auto
Frequency Range: 9kHz~150kHz	RBW 200Hz for QP
Frequency Range: 150kHz~30MHz	RBW 9kHz for QP
Frequency Range: 30MHz~1000MHz	RBW 120kHz for Peak

Note: The emission limits shown in the above table are based on measurements employing a CISPR quasi-peak detector except for the frequency bands 9-90 kHz, 110-490 kHz. Radiated emission limits in these two bands are based on measurements employing an average detector.

4.5.3 Test Procedures

1. Configure the EUT according to ANSI C63.4. The EUT was placed on the top of the turntable 0.8 meter above ground. The phase center of the receiving antenna mounted on the top of a height-variable antenna tower was placed 3 meters far away from the turntable.
2. Power on the EUT and all the supporting units. The turntable was rotated by 360 degrees to determine the position of the highest radiation.
3. The height of the broadband receiving antenna was varied between one meter and four meters above ground to find the maximum emissions field strength of both horizontal and vertical polarization.
4. For each suspected emissions, the antenna tower was scan (from 1 M to 4 M) and then the turntable was rotated (from 0 degree to 360 degrees) to find the maximum reading.
5. Set the test-receiver system to Peak or CISPR quasi-peak Detect Function with specified bandwidth under Maximum Hold Mode.
6. When the radiated emissions limits are expressed in terms of the average value of the emissions, and pulsed operation is employed, the measurement field strength shall be determined by averaging over one complete pulse train, including blanking intervals, as long as the pulse train does not exceed 0.1 seconds. As an alternative (provided the transmitter operates for longer than 0.1 seconds) or in cases where the pulse train exceeds 0.1 seconds, the measured field strength shall be determined from the average absolute voltage during a 0.1 second interval during which the field strength is at its maximum value.
7. In case the emission is lower than 30MHz, loop antenna has to be used for measurement and the recorded data should be QP measured by receiver. Antenna Requirements

4.5.4 Limit

Except for special regulations, the Low-power Radio-frequency Devices must not be equipped with any jacket for installing an antenna with extension cable. An intentional radiator shall be designed to ensure that no antenna other than that furnished by the responsible party shall be used with the device. The use of a permanently attached antenna or of an antenna that uses a unique coupling to the intentional radiator shall be considered sufficient to comply with the provisions of this Section. The manufacturer may design the unit so that the user can replace a broken antenna, but the use of a standard antenna jack or electrical connector is prohibited.

4.5.5 Antenna Anti-Replacement Construction

An embedded-in antenna design is used.

5. LIST OF MEASURING EQUIPMENT

Instrument	Manufacturer	Model No.	Serial No.	Characteristics	Calibration Date	Test Date	Due Date	Remark
Spectrum Analyzer	Rohde & Schwarz	FSP30	101329	9kHz~30GHz	Jun. 14, 2014	May 16, 2015	Jun. 13, 2015	Conducted (TH03-HY)
Temperature Chamber	ESPEC	SU-641	92013721	-30°C ~70°C	Dec. 01, 2014	May 16, 2015	Nov. 30, 2015	Conducted (TH03-HY)
EMI Test Receiver	Rohde & Schwarz	ESCS 30	100356	9kHz – 2.75GHz	Dec. 01, 2014	May 16, 2015~ Jun. 09, 2015	Nov. 30, 2015	Conduction (CO05-HY)
LISN	Rohde & Schwarz	ENV216	100080	9kHz~30MHz	Dec. 02, 2014	May 16, 2015~ Jun. 09, 2015	Dec. 01, 2015	Conduction (CO05-HY)
AC Power Source	ChainTek	APC-1000W	N/A	N/A	N/A	May 16, 2015~ Jun. 09, 2015	N/A	Conduction (CO05-HY)
LISN (for auxiliary equipment)	Rohde & Schwarz	ENV216	100081	9kHz ~ 30MHz	Dec. 08, 2014	May 16, 2015~ Jun. 09, 2015	Dec. 07, 2015	Conduction (CO05-HY)
Bilog Antenna	Schaffner	CBL6111C	2726	30MHz ~ 1GHz	Sep. 27, 2014	May 17, 2015~ Jun. 04, 2015	Sep. 26, 2015	Radiation (03CH07-HY)
Loop Antenna	Rohde & Schwarz	HFH2-Z2	100315	9 kHz~30 MHz	Jul. 28, 2014	May 17, 2015~ Jun. 04, 2015	Jul. 27, 2015	Radiation (03CH07-HY)
Preamplifier	COM-POWER	PA-103A	161241	10MHz-1000MHz	Mar. 12, 2015	May 17, 2015~ Jun. 04, 2015	Mar. 11, 2016	Radiation (03CH07-HY)
Signal Analyzer	Rohde & Schwarz	FSV 30	101749	10Hz~30GHz	Mar. 10, 2015	May 17, 2015~ Jun. 04, 2015	Mar. 09, 2016	Radiation (03CH07-HY)
Antenna Mast	Max-Full	MFA520BS	N/A	1m~4m	N/A	May 17, 2015~ Jun. 04, 2015	N/A	Radiation (03CH07-HY)
Turn Table	ChainTek	Chaintek 3000	N/A	0~360 degree	N/A	May 17, 2015~ Jun. 04, 2015	N/A	Radiation (03CH07-HY)

Appendix A. Test Results of Conducted Emission Test

Test Mode :	Mode 1	Test Voltage :	120Vac / 60Hz
Function Type :	GSM850 Idle + Bluetooth Link + WLAN Link + Adapter 1 + NFC Tx + Earphone		

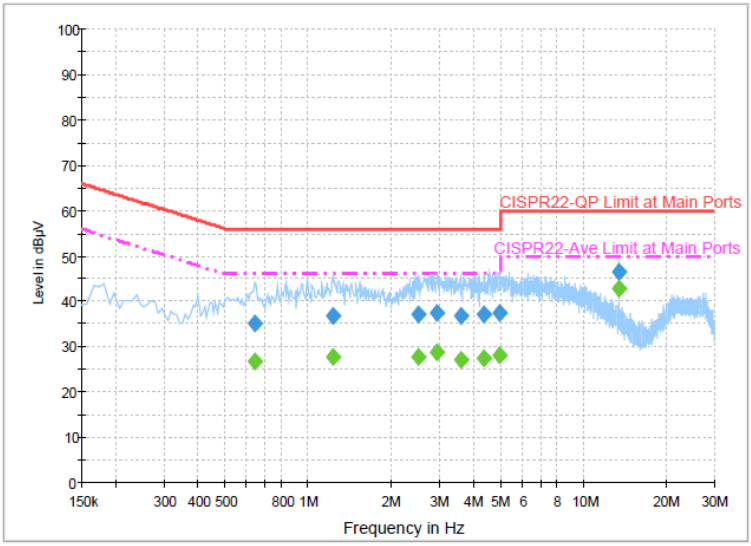

Final Result : Quasi-Peak

Frequency (MHz)	Quasi-Peak (dBµV)	Filter	Line	Corr. (dB)	Margin (dB)	Limit (dBµV)
0.638000	35.0	Off	L1	19.5	21.0	56.0
1.230000	36.7	Off	L1	19.6	19.3	56.0
2.526000	37.2	Off	L1	19.7	18.8	56.0
2.950000	37.6	Off	L1	19.7	18.4	56.0
3.590000	36.8	Off	L1	19.7	19.2	56.0
4.382000	37.0	Off	L1	19.7	19.0	56.0
4.942000	37.5	Off	L1	19.8	18.5	56.0
13.558000	46.5	Off	L1	19.9	13.5	60.0

Final Result : Average

Frequency (MHz)	Average (dBµV)	Filter	Line	Corr. (dB)	Margin (dB)	Limit (dBµV)
0.638000	26.7	Off	L1	19.5	19.3	46.0
1.230000	27.7	Off	L1	19.6	18.3	46.0
2.526000	27.8	Off	L1	19.7	18.2	46.0
2.950000	28.6	Off	L1	19.7	17.4	46.0
3.590000	27.1	Off	L1	19.7	18.9	46.0
4.382000	27.4	Off	L1	19.7	18.6	46.0
4.942000	28.1	Off	L1	19.8	17.9	46.0
13.558000	42.8	Off	L1	19.9	7.2	50.0

Test Mode :	Mode 1	Test Voltage :	120Vac / 60Hz
Function Type :	GSM850 Idle + Bluetooth Link + WLAN Link + Adapter 1 + NFC Tx + Earphone		

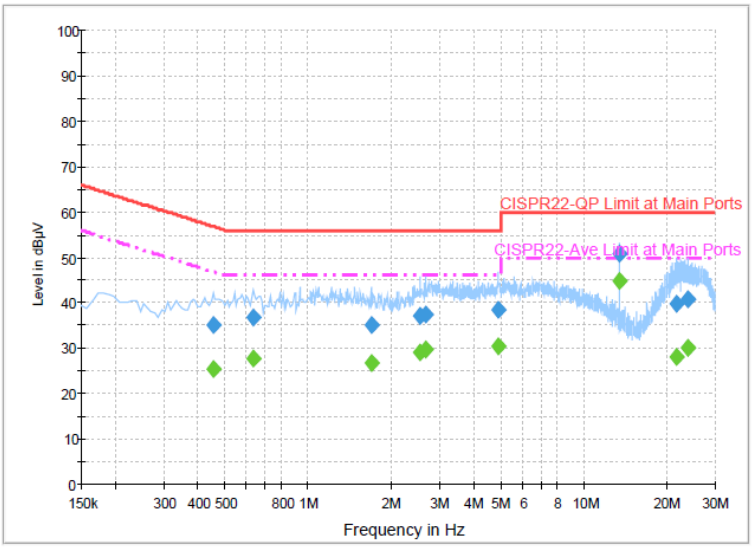

Final Result : Quasi-Peak

Frequency (MHz)	Quasi-Peak (dBµV)	Filter	Line	Corr. (dB)	Margin (dB)	Limit (dBµV)
0.454000	35.0	Off	N	19.4	21.8	56.8
0.630000	36.8	Off	N	19.5	19.2	56.0
1.694000	35.0	Off	N	19.6	21.0	56.0
2.558000	37.0	Off	N	19.6	19.0	56.0
2.678000	37.6	Off	N	19.7	18.4	56.0
4.910000	38.3	Off	N	19.7	17.7	56.0
13.558000	50.9	Off	N	20.0	9.1	60.0
21.798000	39.8	Off	N	20.1	20.2	60.0
23.934000	40.7	Off	N	20.1	19.3	60.0

Final Result : Average

Frequency (MHz)	Average (dBµV)	Filter	Line	Corr. (dB)	Margin (dB)	Limit (dBµV)
0.454000	25.6	Off	N	19.4	21.2	46.8
0.630000	27.8	Off	N	19.5	18.2	46.0
1.694000	26.8	Off	N	19.6	19.2	46.0
2.558000	29.1	Off	N	19.6	16.9	46.0
2.678000	29.9	Off	N	19.7	16.1	46.0
4.910000	30.4	Off	N	19.7	15.6	46.0
13.558000	44.8	Off	N	20.0	5.2	50.0
21.798000	28.2	Off	N	20.1	21.8	50.0
23.934000	30.2	Off	N	20.1	19.8	50.0

Test Mode :	Mode 2	Test Voltage :	120Vac / 60Hz
Function Type :	GSM850 Idle + Bluetooth Link + WLAN Link + Adapter 2 + NFC Tx + Earphone		

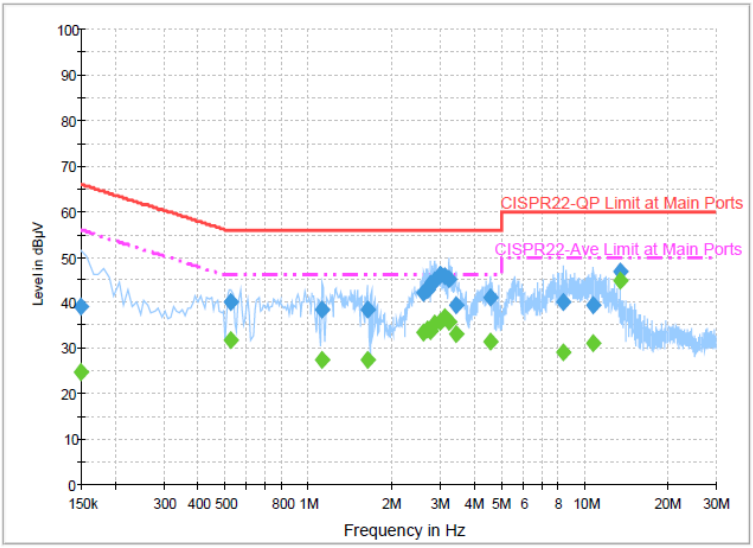

Final Result : Quasi-Peak

Frequency (MHz)	Quasi-Peak (dBµV)	Filter	Line	Corr. (dB)	Margin (dB)	Limit (dBµV)
0.150000	39.2	Off	L1	19.5	26.8	66.0
0.526000	40.2	Off	L1	19.4	15.8	56.0
1.126000	38.4	Off	L1	19.5	17.6	56.0
1.638000	38.6	Off	L1	19.5	17.4	56.0
2.622000	42.3	Off	L1	19.7	13.7	56.0
2.718000	42.8	Off	L1	19.7	13.2	56.0
2.766000	44.3	Off	L1	19.7	11.7	56.0
2.862000	45.0	Off	L1	19.7	11.0	56.0
2.998000	46.2	Off	L1	19.7	9.8	56.0
3.142000	46.0	Off	L1	19.7	10.0	56.0
3.222000	45.3	Off	L1	19.7	10.7	56.0
3.430000	39.4	Off	L1	19.7	16.6	56.0
4.550000	41.0	Off	L1	19.8	15.0	56.0
8.358000	40.0	Off	L1	19.8	20.0	60.0
10.718000	39.6	Off	L1	19.8	20.4	60.0
13.558000	46.9	Off	L1	19.9	13.1	60.0

Test Mode :	Mode 2	Test Voltage :	120Vac / 60Hz
Function Type :	GSM850 Idle + Bluetooth Link + WLAN Link + Adapter 2 + NFC Tx + Earphone		

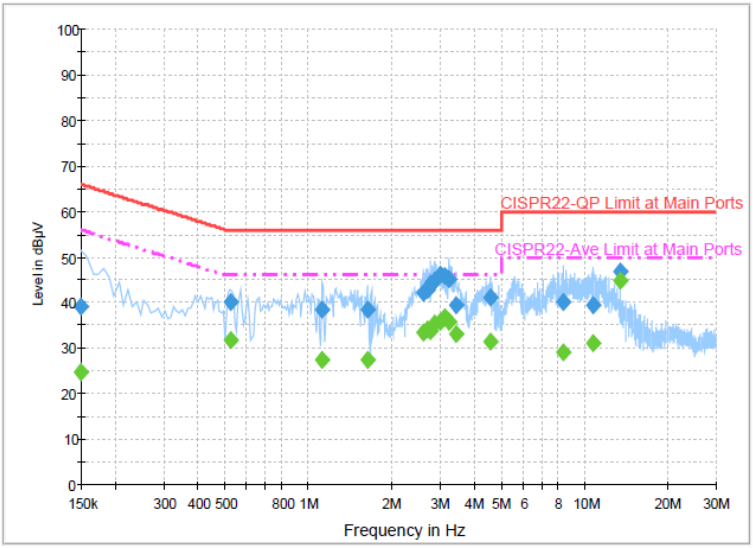

Final Result : Average

Frequency (MHz)	Average (dBµV)	Filter	Line	Corr. (dB)	Margin (dB)	Limit (dBµV)
0.150000	24.8	Off	L1	19.5	31.2	56.0
0.526000	31.8	Off	L1	19.4	14.2	46.0
1.126000	27.3	Off	L1	19.5	18.7	46.0
1.638000	27.4	Off	L1	19.5	18.6	46.0
2.622000	33.4	Off	L1	19.7	12.6	46.0
2.718000	34.1	Off	L1	19.7	11.9	46.0
2.766000	33.8	Off	L1	19.7	12.2	46.0
2.862000	35.4	Off	L1	19.7	10.6	46.0
2.998000	35.7	Off	L1	19.7	10.3	46.0
3.142000	36.7	Off	L1	19.7	9.3	46.0
3.222000	35.6	Off	L1	19.7	10.4	46.0
3.430000	33.0	Off	L1	19.7	13.0	46.0
4.550000	31.3	Off	L1	19.8	14.7	46.0
8.358000	29.2	Off	L1	19.8	20.8	50.0
10.718000	31.2	Off	L1	19.8	18.8	50.0
13.558000	44.8	Off	L1	19.9	5.2	50.0

Test Mode :	Mode 2	Test Voltage :	120Vac / 60Hz
Function Type :	GSM850 Idle + Bluetooth Link + WLAN Link + Adapter 2 + NFC Tx + Earphone		

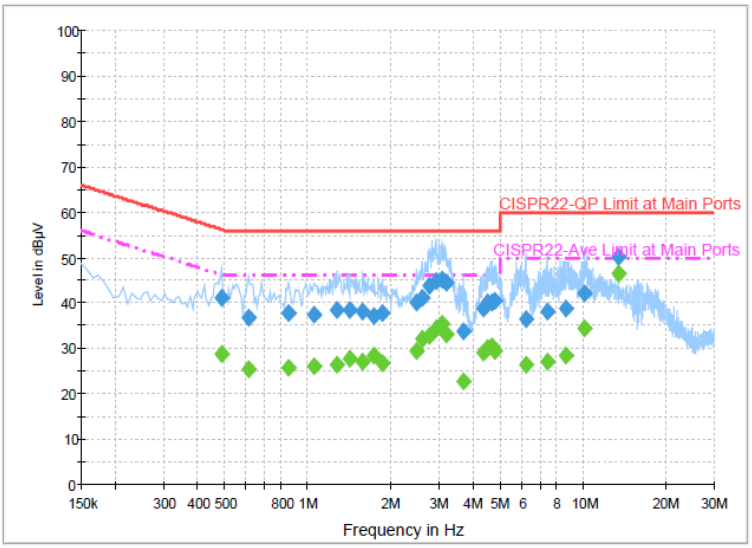

Final Result : Quasi-Peak

Frequency (MHz)	Quasi-Peak (dBµV)	Filter	Line	Corr. (dB)	Margin (dB)	Limit (dBµV)
0.486000	41.3	Off	N	19.5	14.9	56.2
0.614000	36.7	Off	N	19.5	19.3	56.0
0.854000	38.0	Off	N	19.6	18.0	56.0
1.054000	37.5	Off	N	19.5	18.5	56.0
1.278000	38.4	Off	N	19.5	17.6	56.0
1.430000	38.4	Off	N	19.5	17.6	56.0
1.590000	38.1	Off	N	19.5	17.9	56.0
1.750000	37.2	Off	N	19.6	18.8	56.0
1.862000	37.7	Off	N	19.5	18.3	56.0
2.486000	40.0	Off	N	19.7	16.0	56.0
2.598000	41.2	Off	N	19.7	14.8	56.0
2.758000	43.7	Off	N	19.7	12.3	56.0
2.926000	44.8	Off	N	19.7	11.2	56.0
3.102000	45.3	Off	N	19.7	10.7	56.0
3.206000	44.5	Off	N	19.7	11.5	56.0
3.686000	33.8	Off	N	19.7	22.2	56.0
4.334000	38.7	Off	N	19.7	17.3	56.0
4.542000	40.3	Off	N	19.7	15.7	56.0
4.702000	40.1	Off	N	19.7	15.9	56.0
4.798000	40.4	Off	N	19.7	15.6	56.0
6.198000	36.3	Off	N	19.8	23.7	60.0
7.406000	38.2	Off	N	19.7	21.8	60.0
8.662000	38.9	Off	N	19.8	21.1	60.0
10.158000	42.2	Off	N	19.8	17.8	60.0
13.558000	50.2	Off	N	20.0	9.8	60.0

Test Mode :	Mode 2	Test Voltage :	120Vac / 60Hz
Function Type :	GSM850 Idle + Bluetooth Link + WLAN Link + Adapter 2 + NFC Tx + Earphone		

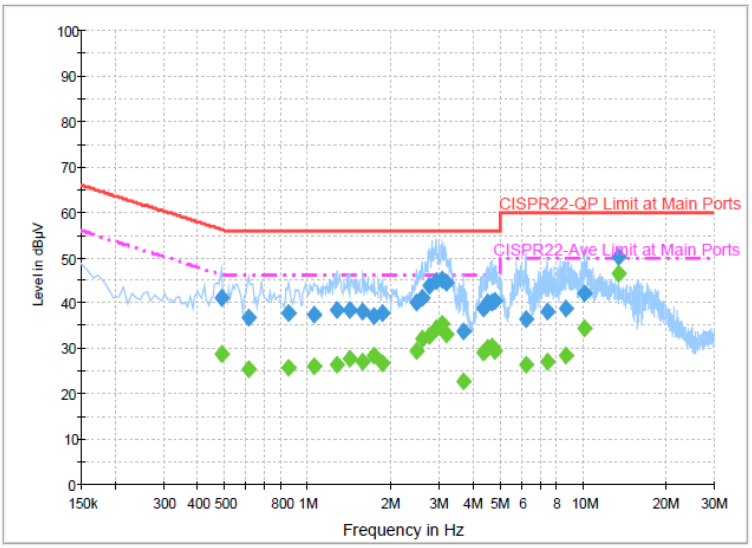

Final Result : Average

Frequency (MHz)	Average (dBµV)	Filter	Line	Corr. (dB)	Margin (dB)	Limit (dBµV)
0.486000	28.7	Off	N	19.5	17.5	46.2
0.614000	25.5	Off	N	19.5	20.5	46.0
0.854000	25.8	Off	N	19.6	20.2	46.0
1.054000	26.0	Off	N	19.5	20.0	46.0
1.278000	26.6	Off	N	19.5	19.4	46.0
1.430000	27.6	Off	N	19.5	18.4	46.0
1.590000	27.2	Off	N	19.5	18.8	46.0
1.750000	28.3	Off	N	19.6	17.7	46.0
1.862000	26.8	Off	N	19.5	19.2	46.0
2.486000	29.5	Off	N	19.7	16.5	46.0
2.598000	32.2	Off	N	19.7	13.8	46.0
2.758000	32.9	Off	N	19.7	13.1	46.0
2.926000	34.4	Off	N	19.7	11.6	46.0
3.102000	35.6	Off	N	19.7	10.4	46.0
3.206000	33.0	Off	N	19.7	13.0	46.0
3.686000	22.9	Off	N	19.7	23.1	46.0
4.334000	29.2	Off	N	19.7	16.8	46.0
4.542000	30.2	Off	N	19.7	15.8	46.0
4.702000	30.5	Off	N	19.7	15.5	46.0
4.798000	29.4	Off	N	19.7	16.6	46.0
6.198000	26.4	Off	N	19.8	23.6	50.0
7.406000	27.1	Off	N	19.7	22.9	50.0
8.662000	28.4	Off	N	19.8	21.6	50.0
10.158000	34.3	Off	N	19.8	15.7	50.0
13.558000	46.4	Off	N	20.0	3.6	50.0

Remark: 13.558MHz is the NFC RF fundamental signal.

Appendix B. Test Results of Conducted Test Items

B.1 Test Result of 20dB Spectrum Bandwidth

Test mode	NFC Tx	Test Frequency (MHz)	13.56
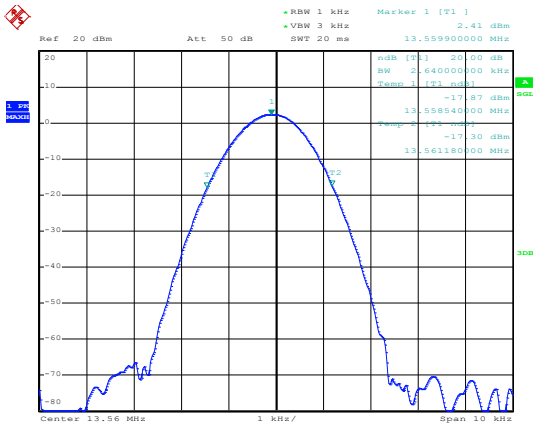		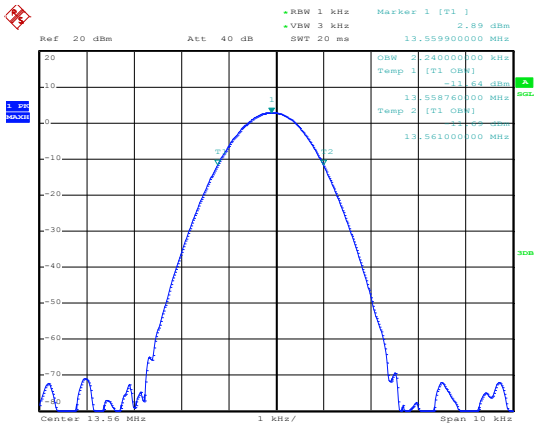	
20dB Bandwidth (kHz)	2.640	**99% OccupiedBW(kHz)**	2.240
Frequency range (MHz)	**f_L > 13.553**	13.55854	**Test Result**
	f_H < 13.567	13.56118	**Complies**

B.2 Test Result of Frequency Stability

Voltage vs. Frequency Stability		Temperature vs. Frequency Stability	
Voltage (Vac)	**Measurement Frequency (MHz)**	**Temperature (℃)**	**Measurement Frequency (MHz)**
120	13.559870	**-20**	13.559960
102	13.559870	**-10**	13.559960
138	13.559880	**0**	13.559950
		10	13.559920
		20	13.559900
		30	13.559880
		40	13.559840
		50	13.559840
Max.Deviation (MHz)	-0.000130	**Max.Deviation (MHz)**	-0.000160
Max.Deviation (ppm)	-9.5870	**Max.Deviation (ppm)**	-11.7994
Limit	**FS < ±100 ppm**	**Limit**	**FS < ±100 ppm**
Test Result	**PASS**	**Test Result**	**PASS**

Appendix C. Test Results of Radiated Test Items

C.1 Test Result of Field Strength of Fundamental Emissions

<EUT with Adapter 1>

Test Mode :	NFC Tx	Test Frequency (MHz)	13.56

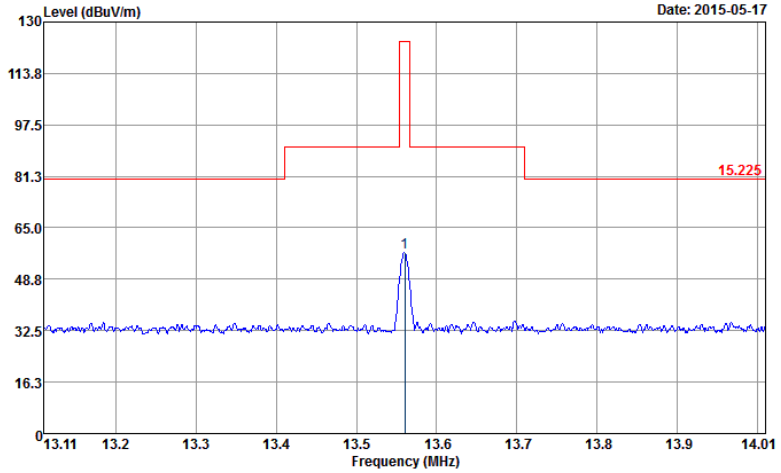

Site : 03CH07-HY
Condition : 15.225 3m LOOP_ANT_140728(H) HORIZONTAL
: RBW:9.000KHz VBW:9.000KHz SWT:Auto
Project : FR 550147
Mode : 1

	Freq	Level	Over Limit	Limit Line	Read Level	Antenna Factor	Cable Loss	A/Pos	T/Pos	Remark
	MHz	dBuV/m	dB	dBuV/m	dBuV	dB/m	dB	cm	deg	
1	13.56	57.09	-66.91	124.00	36.62	20.07	0.40	100	186	QP

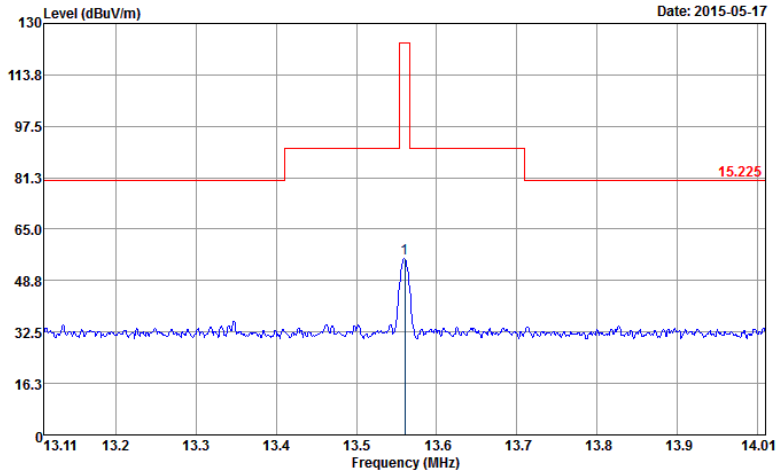

Site : 03CH07-HY
Condition : 15.225 3m LOOP_ANT_140728(V) VERTICAL
: RBW:9.000KHz VBW:9.000KHz SWT:Auto
Project : FR 550147
Mode : 1

	Freq	Level	Over Limit	Limit Line	Read Level	Antenna Factor	Cable Loss	A/Pos	T/Pos	Remark
	MHz	dBuV/m	dB	dBuV/m	dBuV	dB/m	dB	cm	deg	
1	13.56	55.87	-68.13	124.00	35.74	19.73	0.40	100	214	QP

Note: All NFC's spurious emissions are below 20dB of limits.

<EUT with Adapter 2>

Test Mode :	NFC Tx	Test Frequency (MHz)	13.56

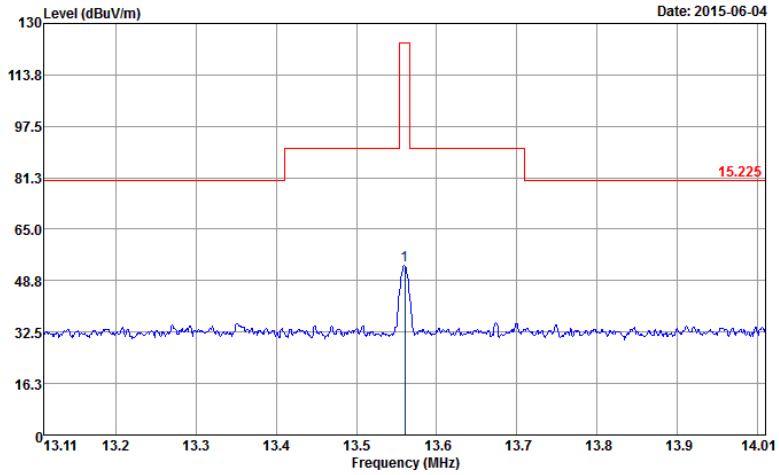

Site : 03CH07-HY
Condition : 15.225 3m LOOP_ANT_140728(H) HORIZONTAL
: RBW:9.000KHz VBW:9.000KHz SWT:Auto
Project : FR 550147
Mode : 1

	Freq	Level	Over Limit	Limit Line	Read Level	Antenna Factor	Cable Loss	A/Pos	T/Pos	Remark
	MHz	dBuV/m	dB	dBuV/m	dBuV	dB/m	dB	cm	deg	
1	13.56	53.52	-70.48	124.00	33.05	20.07	0.40	100	175	QP

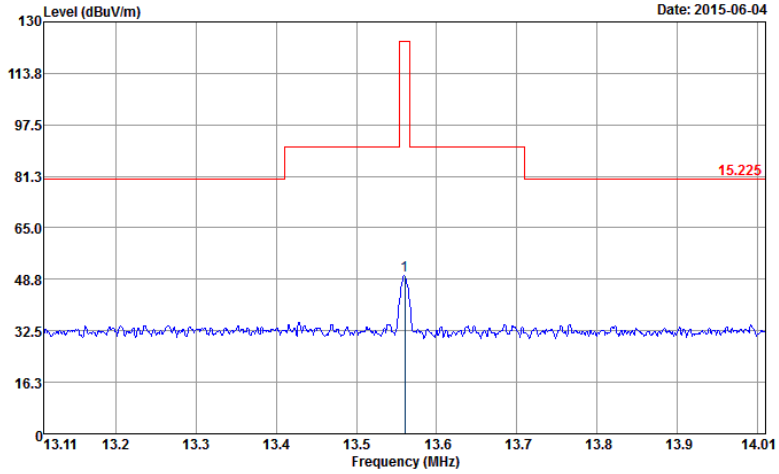

Site : 03CH07-HY
Condition : 15.225 3m LOOP_ANT_140728(V) VERTICAL
: RBW:9.000KHz VBW:9.000KHz SWT:Auto
Project : FR 550147
Mode : 1

	Freq	Level	Over Limit	Limit Line	Read Level	Antenna Factor	Cable Loss	A/Pos	T/Pos	Remark
	MHz	dBuV/m	dB	dBuV/m	dBuV	dB/m	dB	cm	deg	
1	13.56	49.89	-74.11	124.00	29.76	19.73	0.40	100	78	QP

Note: All NFC's spurious emissions are below 20dB of limits.

C.2 Results of Radiated Emissions (9 kHz~30MHz)

<EUT with Adapter 1>

Test Mode :	NFC Tx	Polarization :	Horizontal

Frequency (MHz)	Level (dBµV/m)	Over Limit (dB)	Limit Line (dBµV/m)	Read Level (dBµV)	Antenna Factor (dB)	Cable Loss (dB)	Ant Pos (cm)	Table Pos (deg)	Remark
0.01313	26.03	-99.21	125.24	5.5	20.24	0.29	-	-	Average
0.06852	22.35	-88.54	110.89	2.05	20.01	0.29	-	-	Average
0.09634	20.89	-87.04	107.93	0.64	19.96	0.29	-	-	QP
0.12516	21	-84.65	105.65	0.77	19.94	0.29	-	-	Average
0.4492	40.11	-54.45	94.56	19.94	19.88	0.29	-	-	Average
0.49	37.39	-36.41	73.8	17.22	19.88	0.29	-	-	QP
11.392	37.85	-32.15	70	17.39	20.07	0.39	-	-	QP
13.56	56.98	-13.02	70	36.51	20.07	0.4	-	-	QP
18.475	38.1	-31.9	70	17.43	20.25	0.42	100	122	QP
28.835	36.46	-33.54	70	15.36	20.59	0.51	-	-	QP

Test Mode :	NFC Tx	Polarization :	Vertical

Frequency (MHz)	Level (dBμV/m)	Over Limit (dB)	Limit Line (dBμV/m)	Read Level (dBμV)	Antenna Factor (dB)	Cable Loss (dB)	Ant Pos (cm)	Table Pos (deg)	Remark
0.00941	26.3	-101.83	128.13	5.75	20.26	0.29	-	-	Average
0.06009	22.61	-89.42	112.03	2.29	20.03	0.29	-	-	Average
0.09722	20.79	-87.06	107.85	0.51	19.99	0.29	-	-	QP
0.12472	20.99	-84.7	105.69	0.74	19.96	0.29	-	-	Average
0.48524	42.96	-50.92	93.88	22.77	19.9	0.29	-	-	Average
5.356	58.64	-11.36	70	38.35	19.93	0.36	100	199	QP
11.128	43.79	-26.21	70	23.59	19.81	0.39	-	-	QP
13.56	55.81	-14.19	70	35.68	19.73	0.4	-	-	QP
19.51	47.03	-22.97	70	26.72	19.88	0.43	-	-	QP
27.47	35.92	-34.08	70	15.36	20.08	0.48	-	-	QP

Note:

1. 13.56 MHz is fundamental signal which can be ignored.
2. The amplitude of spurious emissions which are attenuated by more than 20dB below the permissible value has no need to be reported.
3. Distance extrapolation factor = 40 log (specific distance / test distance) (dB);
4. Limit line = specific limits (dBμV) + distance extrapolation factor.

<EUT with Adapter 2>

Test Mode :	NFC Tx	Polarization :	Horizontal

Frequency (MHz)	Level (dBμV/m)	Over Limit (dB)	Limit Line (dBμV/m)	Read Level (dBμV)	Antenna Factor (dB)	Cable Loss (dB)	Ant Pos (cm)	Table Pos (deg)	Remark
0.01124	26.66	-99.93	126.59	6.13	20.24	0.29	-	-	Average
0.0699	22.04	-88.67	110.71	1.74	20.01	0.29	-	-	Average
0.09942	21.06	-86.59	107.65	0.81	19.96	0.29	-	-	QP
0.13124	22.55	-82.69	105.24	2.32	19.94	0.29	-	-	Average
0.44342	42.1	-52.57	94.67	21.93	19.88	0.29	-	-	Average
0.52755	37.72	-35.44	73.16	17.53	19.88	0.31	-	-	QP
8.728	35.88	-34.12	70	15.53	19.97	0.38	-	-	QP
13.56	53.37	-16.63	70	32.9	20.07	0.4	-	-	QP
19.78	37.17	-32.83	70	16.33	20.41	0.43	100	211	QP
28.135	35.84	-34.16	70	14.69	20.65	0.5	-	-	QP

Test Mode :	NFC Tx	Polarization :	Vertical

Frequency (MHz)	Level (dBμV/m)	Over Limit (dB)	Limit Line (dBμV/m)	Read Level (dBμV)	Antenna Factor (dB)	Cable Loss (dB)	Ant Pos (cm)	Table Pos (deg)	Remark
0.04307	26.13	-88.79	114.92	5.72	20.12	0.29	-	-	Average
0.06027	21.59	-90.41	112	1.27	20.03	0.29	-	-	Average
0.10568	21.58	-85.54	107.12	1.3	19.99	0.29	-	-	QP
0.1312	22.35	-82.9	105.25	2.1	19.96	0.29	-	-	Average
0.44342	42.23	-52.44	94.67	22.04	19.9	0.29	-	-	Average
0.51253	39.23	-34.18	73.41	19.02	19.9	0.31	-	-	QP
10.904	35.89	-34.11	70	15.69	19.81	0.39	-	-	QP
13.56	49.88	-20.12	70	29.75	19.73	0.4	-	-	QP
19.879	37.75	-32.25	70	17.4	19.92	0.43	100	319	QP
25.285	35.97	-34.03	70	15.45	20.07	0.45	-	-	QP

Note:

1. 13.56 MHz is fundamental signal which can be ignored.
2. The amplitude of spurious emissions which are attenuated by more than 20dB below the permissible value has no need to be reported.
3. Distance extrapolation factor = 40 log (specific distance / test distance) (dB);
4. Limit line = specific limits (dBμV) + distance extrapolation factor.

C.3 Results of Radiated Emissions (30MHz~1GHz)

<EUT with Adapter 1>

Test Mode :	NFC Tx	Polarization :	Horizontal

Frequency (MHz)	Level (dBμV/m)	Over Limit (dB)	Limit Line (dBμV/m)	Read Level (dBμV)	Antenna Factor (dB)	Cable Loss (dB)	Preamp Factor (dB)	Ant Pos (cm)	Table Pos (deg)	Remark
106.95	32.76	-10.74	43.5	50.93	10.62	2.38	31.17	100	0	Peak
176.34	20.72	-22.78	43.5	39.92	9.17	2.61	30.98	-	-	Peak
255.99	23.16	-22.84	46	37.84	13.36	2.96	31	-	-	Peak
502.3	22.01	-23.99	46	30.71	18.02	3.89	30.61	-	-	Peak
724.9	26.28	-19.72	46	30.6	21.67	4.41	30.4	-	-	Peak
881.7	27.99	-18.01	46	30.77	22.9	4.66	30.34	-	-	Peak

Test Mode :	NFC Tx	Polarization :	Vertical

Frequency (MHz)	Level (dBμV/m)	Over Limit (dB)	Limit Line (dBμV/m)	Read Level (dBμV)	Antenna Factor (dB)	Cable Loss (dB)	Preamp Factor (dB)	Ant Pos (cm)	Table Pos (deg)	Remark
98.58	28.87	-14.63	43.5	47.75	10.16	2.06	31.1	100	0	Peak
156.09	20.4	-23.1	43.5	38.29	10.66	2.61	31.16	-	-	Peak
250.32	21.23	-24.77	46	36.87	12.4	2.96	31	-	-	Peak
707.4	25.67	-20.33	46	30.78	20.88	4.41	30.4	-	-	Peak
883.1	28.12	-17.88	46	30.89	22.9	4.66	30.33	-	-	Peak
997.9	30.59	-23.41	54	31.13	24.64	5.03	30.21	-	-	Peak

Note:

1. The amplitude of spurious emissions which are attenuated by more than 20dB below the permissible value has no need to be reported.
2. Emission level (dBμV/m) = 20 log Emission level (μV/m).
3. Corrected Reading: Antenna Factor + Cable Loss + Read Level - Preamp Factor= Level.

<EUT with Adapter 2>

Test Mode :	NFC Tx	Polarization :	Horizontal

Frequency (MHz)	Level (dBμV/m)	Over Limit (dB)	Limit Line (dBμV/m)	Read Level (dBμV)	Antenna Factor (dB)	Cable Loss (dB)	Preamp Factor (dB)	Ant Pos (cm)	Table Pos (deg)	Remark
103.44	35.38	-8.12	43.5	53.65	10.48	2.38	31.13	-	-	Peak
158.25	38.1	-5.4	43.5	56.1	10.58	2.61	31.19	100	0	Peak
203.34	33.02	-10.48	43.5	52.29	9.14	2.69	31.1	-	-	Peak
468	21.29	-24.71	46	30.84	17.48	3.77	30.8	-	-	Peak
599.6	23.37	-22.63	46	30.3	19.59	4.08	30.6	-	-	Peak
750.1	25.85	-20.15	46	29.67	22.1	4.48	30.4	-	-	Peak

Test Mode :	NFC Tx	Polarization :	Vertical

Frequency (MHz)	Level (dBμV/m)	Over Limit (dB)	Limit Line (dBμV/m)	Read Level (dBμV)	Antenna Factor (dB)	Cable Loss (dB)	Preamp Factor (dB)	Ant Pos (cm)	Table Pos (deg)	Remark
101.82	35.79	-7.71	43.5	54.09	10.44	2.38	31.12	100	0	Peak
155.55	29.23	-14.27	43.5	47.08	10.7	2.61	31.16	-	-	Peak
210.36	28.58	-14.92	43.5	47.79	9.2	2.69	31.1	-	-	Peak
463.8	20.6	-25.4	46	30.19	17.44	3.77	30.8	-	-	Peak
617.1	23.92	-22.08	46	30.3	20.11	4.08	30.57	-	-	Peak
784.4	26.14	-19.86	46	29.9	21.95	4.62	30.33	-	-	Peak

Note:

1. The amplitude of spurious emissions which are attenuated by more than 20dB below the permissible value has no need to be reported.
2. Emission level (dBμV/m) = 20 log Emission level (μV/m).
3. Corrected Reading: Antenna Factor + Cable Loss + Read Level - Preamp Factor= Level.