FCC RF Test Report

APPLICANT	:	Motorola Mobility, LLC
EQUIPMENT	:	Mobile Cellular Phone
BRAND NAME	:	Motorola
MODEL NAME	:	4603
FCC ID	:	IHDT56UB2
STANDARD	:	FCC Part 15 Subpart E §15.407
CLASSIFICATION	:	(NII) Unlicensed National Information Infrastructure

The product was received on May 01, 2015. We, SPORTON INTERNATIONAL INC., would like to declare that the tested sample has been evaluated in accordance with the test procedures and has been in compliance with the applicable technical standards.

The test results in this report apply exclusively to the tested model / sample. Without written approval of SPORTON INTERNATIONAL INC., the test report shall not be reproduced except in full.

Reviewed by: Joseph Lin / Supervisor

Approved by: Jones Tsai / Manager

Testing Laboratory
1190

SPORTON INTERNATIONAL INC.
No. 52, Hwa Ya 1st Rd., Hwa Ya Technology Park, Kwei-Shan District, Tao Yuan City, Taiwan, R.O.C.

TABLE OF CONTENTS

REVISION HISTORY **3**

1 GENERAL DESCRIPTION **4**

1.1 Applicant 4
1.2 Manufacturer 4
1.3 Feature of Equipment Under Test 4
1.4 Product Specification of Equipment Under Test 4
1.5 Modification of EUT 4

APPENDIX A. ORIGINAL REPORT

REVISION HISTORY

REPORT NO.	VERSION	DESCRIPTION	ISSUED DATE
FR550147-02E	Rev. 01	The Bluetooth and WLAN circuitry of this variant model (4603) is identical to that of the parent product (4602), based on the product equality declaration by the manufacturer.	Jul. 08, 2015

1 General Description

1.1 Applicant

Motorola Mobility, LLC
222 W Merchandise Mart Plaza, Suite 1800, Chicago, IL 60654, United States

1.2 Manufacturer

Motorola Mobility, LLC
222 W Merchandise Mart Plaza, Suite 1800, Chicago, IL 60654, United States

1.3 Feature of Equipment Under Test

Product Feature & Specification	
Equipment	Mobile Cellular Phone
Brand Name	Motorola
Model Name	4603
FCC ID	IHDT56UB2
EUT supports Radios application	GSM/EGPRS/WCDMA/HSPA/LTE/NFC/FM WLAN 11b/g/n HT20 WLAN 11a/n HT20/HT40 Bluetooth 2.1 EDR Bluetooth 4.1 - LE
HW Version	P2
EUT Stage	Identical Prototype

Remark: The above EUT's information was declared by manufacturer. Please refer to the specifications or user's manual for more detailed description.

1.4 Product Specification of Equipment Under Test

Product Specification subjective to this standard	
Tx/Rx Frequency Range	5180 MHz ~ 5240 MHz 5260 MHz ~ 5320 MHz 5500 MHz ~ 5580 MHz and 5660 MHz ~ 5700 MHz
Antenna Type	Fixed, stamped metal Antenna (The antenna peak gain of EUT is less than 6 dBi)
Type of Modulation	OFDM (BPSK / QPSK / 16QAM / 64QAM)

1.5 Modification of EUT

No modifications are made to the EUT during all test items.

Appendix A. Original Report

Please refer to Sporton report number FR550147E as below.

FCC RF Test Report

APPLICANT	:	Motorola Mobility, LLC
EQUIPMENT	:	Mobile Cellular Phone
BRAND NAME	:	Motorola
MODEL NAME	:	4602
FCC ID	:	IHDT56UB1
STANDARD	:	FCC Part 15 Subpart E §15.407
CLASSIFICATION	:	(NII) Unlicensed National Information Infrastructure

The product was received on May 01, 2015 and testing was completed on Jun. 15, 2015. We, SPORTON INTERNATIONAL INC., would like to declare that the tested sample has been evaluated in accordance with the test procedures and has been in compliance with the applicable technical standards.

The test results in this report apply exclusively to the tested model / sample. Without written approval of SPORTON INTERNATIONAL INC., the test report shall not be reproduced except in full.

Reviewed by: Joseph Lin / Supervisor

Approved by: Jones Tsai / Manager

Testing Laboratory
1190

SPORTON INTERNATIONAL INC.
No. 52, Hwa Ya 1st Rd., Hwa Ya Technology Park, Kwei-Shan District, Tao Yuan City, Taiwan, R.O.C.

TABLE OF CONTENTS

SUMMARY OF TEST RESULT **4**

1 GENERAL DESCRIPTION **5**

1.1 Applicant 5
1.2 Manufacturer 5
1.3 Feature of Equipment Under Test 5
1.4 Product Specification of Equipment Under Test 6
1.5 Modification of EUT 6
1.6 Testing Location 7
1.7 Applicable Standards 7

2 TEST CONFIGURATION OF EQUIPMENT UNDER TEST **8**

2.1 Carrier Frequency Channel 8
2.2 Pre-Scanned RF Power 9
2.3 Test Mode 11
2.4 Connection Diagram of Test System 12
2.5 Support Unit used in test configuration and system 15
2.6 EUT Operation Test Setup 15
2.7 Measurement Results Explanation Example 15

3 TEST RESULT **16**

3.1 26dB & 99% Occupied Bandwidth Measurement 16
3.2 Maximum Conducted Output Power Measurement 18
3.3 Power Spectral Density Measurement 20
3.4 Unwanted Radiated Emission Measurement 22
3.5 AC Conducted Emission Measurement 26
3.6 Frequency Stability Measurement 36
3.7 Automatically Discontinue Transmission 37
3.8 Antenna Requirements 38

4 LIST OF MEASURING EQUIPMENTS **39**

5 UNCERTAINTY OF EVALUATION **40**

APPENDIX A. CONDUCTED TEST RESULTS

APPENDIX B. RADIATED TEST RESULTS

REVISION HISTORY

REPORT NO.	VERSION	DESCRIPTION	ISSUED DATE
FR550147E	Rev. 01	Initial issue of report	Jul. 01, 2015

SUMMARY OF TEST RESULT

Report Section	FCC Rule	Description	Limit	Result	Remark
3.1	2.1049 15.403(i)	26dB & 99% Bandwidth	-	Pass	-
3.2	15.407(a)	Maximum Conducted Output Power	≤ 24 dBm (depend on band)	Pass	-
3.3	15.407(a)	Power Spectral Density	≤ 11 dBm (depend on band)	Pass	-
3.4	15.407(b)	Unwanted Emissions	≤ -17, -27 dBm (depend on band)&15.209(a)	Pass	Under limit 0.12 dB at 5149.700 MHz
3.5	15.207	AC Conducted Emission	15.207(a)	Pass	Under limit 8.50 dB at 2.766 MHz
3.6	15.407(g)	Frequency Stability	Within Operation Band	Pass	-
3.7	15.407(c)	Automatically Discontinue Transmission	Discontinue Transmission	Pass	-
3.8	15.203 & 15.407(a)	Antenna Requirement	N/A	Pass	-

1 General Description

1.1 Applicant

Motorola Mobility, LLC
222 W Merchandise Mart Plaza, Suite 1800, Chicago, IL 60654, United States

1.2 Manufacturer

Motorola Mobility, LLC
222 W Merchandise Mart Plaza, Suite 1800, Chicago, IL 60654, United States

1.3 Feature of Equipment Under Test

Product Feature & Specification	
Equipment	Mobile Cellular Phone
Brand Name	Motorola
Model Name	4602
FCC ID	IHDT56UB1
IMEI Code	990006240086388 (for AC Conducted Emission) 990006240060151 (for Radiated Spurious Emission)
EUT supports Radios application	CDMA/EV-DO/GSM/EGPRS/WCDMA/HSPA/LTE/NFC WLAN 11b/g/n HT20 WLAN 11a/n HT20/HT40 Bluetooth 2.1 EDR Bluetooth 4.1 - LE
HW Version	P2
EUT Stage	Identical Prototype

Remark: The above EUT's information was declared by manufacturer. Please refer to the specifications or user's manual for more detailed description.

Accessory List	
AC Adapter 1	Brand Name : Motorola
	Model Name : SPN5791A
AC Adapter 2	Brand Name : Motorola
	Model Name : SPN5865A
Battery	Brand Name : Motorola
	Model Name : FL40
USB Cable	Brand Name : Motorola
	Model Name : SKN6461A
Earphone	Brand Name : Motorola
	Model Name : 89719N

1.4 Product Specification of Equipment Under Test

Product Specification subjective to this standard	
Tx/Rx Frequency Range	5180 MHz ~ 5240 MHz 5260 MHz ~ 5320 MHz 5500 MHz ~ 5700 MHz
Maximum Output Power to Antenna	**<5180 MHz ~ 5240 MHz>** 802.11a : 17.42 dBm / 0.0552 W 802.11n HT20 : 15.96 dBm / 0.0394 W 802.11n HT40 : 15.06 dBm / 0.0321 W **<5260 MHz ~ 5320 MHz>** 802.11a : 17.33 dBm / 0.0541 W 802.11n HT20 : 16.03 dBm / 0.0401 W 802.11n HT40 : 14.93 dBm / 0.0311 W **<5500 MHz ~ 5700 MHz >** 802.11a : 17.48 dBm / 0.0560 W 802.11n HT20 : 16.29 dBm / 0.0426 W 802.11n HT40 : 15.06 dBm / 0.0321 W
99% Occupied Bandwidth	802.11a : 24.85 MHz 802.11n HT20 : 20.50 MHz 802.11n HT40 : 37.10 MHz
Antenna Type	Fixed, stamped metal Antenna with gain **<5180 MHz ~ 5240 MHz>** -1.10 dBi **<5260 MHz ~ 5320 MHz>** -0.50 dBi **<5500 MHz ~ 5700 MHz >** -0.20 dBi
Type of Modulation	OFDM (BPSK / QPSK / 16QAM / 64QAM)

1.5 Modification of EUT

No modifications are made to the EUT during all test items.

1.6 Testing Location

Sporton Lab is accredited to ISO 17025 by Taiwan Accreditation Foundation (TAF code : 1190) and the FCC designation No. TW1022 under the FCC 2.948(e) by Mutual Recognition Agreement (MRA) in FCC Test.

Test Site	SPORTON INTERNATIONAL INC.		
Test Site Location	No. 52, Hwa Ya 1st Rd., Hwa Ya Technology Park, Kwei-Shan District, Tao Yuan City, Taiwan, R.O.C. TEL: +886-3-327-3456 FAX: +886-3-328-4978		
Test Site No.	**Sporton Site No.**		
	TH02-HY	CO05-HY	03CH07-HY

Note: The test site complies with ANSI C63.4 2009 requirement.

1.7 Applicable Standards

According to the specifications of the manufacturer, the EUT must comply with the requirements of the following standards:

- FCC Part 15 Subpart E
- FCC KDB 789033 D02 General UNII Test Procedures New Rules v01
- ANSI C63.10-2009

Remark:

1. All test items were verified and recorded according to the standards and without any deviation during the test.
2. FCC permits the use of the 1.5 meter table as an alternative in C63.10-2013 through inquiry tracking number 961829.
3. This EUT has also been tested and complied with the requirements of FCC Part 15, Subpart B, recorded in a separate test report.

2 Test Configuration of Equipment Under Test

The EUT has been associated with peripherals and configuration operated in a manner tended to maximize its emission characteristics in a typical application. Frequency range investigated: conducted emission (150 kHz to 30 MHz) and radiated emission (9 kHz to the 10th harmonic of the highest fundamental frequency or to 40 GHz, whichever is lower). For radiated measurement, pre-scanned in three orthogonal panels, X, Y, Z. The worst cases (Z plane) were recorded in this report.

The final configuration from all the combinations and the worst-case data rates were investigated by measuring the maximum power across all the data rates and modulation modes under section 2.2.

Based on the worst configuration found above, the RF power setting is set individually to meet FCC compliance limit for the final conducted and radiated tests shown in section 2.3.

2.1 Carrier Frequency Channel

Frequency Band	Channel	Freq. (MHz)	Channel	Freq. (MHz)
5150-5250 MHz Band 1 (U-NII-1)	36	5180	44	5220
	38	**5190**	**46**	**5230**
	40	5200	48	5240

Frequency Band	Channel	Freq. (MHz)	Channel	Freq. (MHz)
5250-5350 MHz Band 2 (U-NII-2A)	52	5260	60	5300
	54	**5270**	**62**	**5310**
	56	5280	64	5320

Frequency Band	Channel	Freq. (MHz)	Channel	Freq. (MHz)
5470-5725 MHz Band 3 (U-NII-2C)	100	5500	116	5580
	102	**5510**	132	5660
	104	5520	**134**	**5670**
	108	5540	136	5680
	110	**5550**	140	5700
	112	5560		

Note: The above Frequency and Channel in boldface were 802.11n HT40.

2.2 Pre-Scanned RF Power

Preliminary tests were performed in different data rate and data rate associated with the highest power were chosen for full test in the following tables. Final Output Power equals to Measured Output Power adds the duty factor.

Channel	Frequency	5GHz 802.11a Average Power (dBm)							
		Data Rate							
		6 Mbps	9 Mbps	12 Mbps	18 Mbps	24 Mbps	36 Mbps	48 Mbps	54 Mbps
CH 36	5180 MHz	16.58	16.43	16.54	16.56	16.55	16.36	15.20	14.23
CH 44	5220 MHz	17.42	16.41	16.35	16.62	16.38	16.09	15.11	13.93
CH 48	5240 MHz	17.18	16.41	16.34	16.59	16.39	16.12	15.06	14.03
CH 52	5260 MHz	17.26	16.37	16.35	16.52	16.27	16.13	15.03	13.79
CH 60	5300 MHz	17.33	16.38	16.32	16.56	16.31	16.15	15.07	13.89
CH 64	5320 MHz	15.29	15.28	15.27	15.26	15.24	15.26	15.10	13.87
CH 100	5500 MHz	16.85	16.46	16.60	16.76	16.29	15.79	14.98	13.95
CH 116	5580 MHz	**17.48**	16.41	16.62	16.84	16.32	15.82	15.04	14.03
CH 140	5700 MHz	14.71	14.69	14.67	14.63	14.65	14.68	14.53	13.47

Channel	Frequency	5GHz 802.11a Peak Power (dBm)							
		Data Rate							
		6 Mbps	9 Mbps	12 Mbps	18 Mbps	24 Mbps	36 Mbps	48 Mbps	54 Mbps
CH 36	5180 MHz	21.10	21.09	21.05	21.06	21.07	21.05	21.09	20.88
CH 44	5220 MHz	21.41	21.07	20.96	20.97	20.95	21.02	20.88	20.58
CH 48	5240 MHz	21.12	21.10	21.02	20.92	20.94	21.03	20.90	20.59
CH 52	5260 MHz	21.41	21.13	21.04	20.95	20.92	20.99	20.92	20.57
CH 60	5300 MHz	21.49	21.31	21.13	21.08	21.03	20.91	20.95	20.82
CH 64	5320 MHz	21.13	21.10	21.05	21.07	21.06	21.01	20.94	20.92
CH 100	5500 MHz	21.45	21.41	21.42	21.43	21.39	21.30	21.21	21.03
CH 116	5580 MHz	21.43	21.36	21.37	21.40	21.07	20.95	20.91	20.86
CH 140	5700 MHz	20.30	20.22	20.26	20.23	20.24	20.20	20.22	20.01

Channel	Frequency	5GHz 802.11n HT20 Average Power (dBm)							
		Data Rate							
		MCS0	MCS1	MCS2	MCS3	MCS4	MCS5	MCS6	MCS7
CH 36	5180 MHz	15.96	15.94	15.89	15.92	15.74	15.24	14.25	13.03
CH 44	5220 MHz	15.87	15.85	15.80	15.84	15.68	15.21	14.22	13.00
CH 48	5240 MHz	15.84	15.82	15.81	15.84	15.63	15.22	14.31	12.92
CH 52	5260 MHz	15.99	15.97	15.94	15.96	15.61	15.20	14.38	13.23
CH 60	5300 MHz	16.03	15.95	16.00	15.97	15.26	15.28	13.73	12.80
CH 64	5320 MHz	15.21	15.17	15.19	15.09	15.16	14.88	13.71	12.84
CH 100	5500 MHz	**16.29**	16.08	16.16	16.27	15.78	15.34	14.68	14.03
CH 116	5580 MHz	16.18	16.12	16.17	16.10	15.30	14.95	13.87	12.83
CH 140	5700 MHz	13.81	13.79	13.75	13.72	13.73	13.78	13.57	12.43

Channel	Frequency	5GHz 802.11n HT20 Peak Power (dBm)							
		Data Rate							
		MCS0	MCS1	MCS2	MCS3	MCS4	MCS5	MCS6	MCS7
CH 36	5180 MHz	21.12	21.10	21.07	21.00	21.01	21.06	20.98	20.28
CH 44	5220 MHz	21.08	20.96	20.97	21.01	21.00	21.01	20.90	20.22
CH 48	5240 MHz	21.06	21.01	21.02	21.04	20.96	21.02	20.91	21.02
CH 52	5260 MHz	21.16	21.08	21.06	21.15	21.06	21.08	20.96	21.00
CH 60	5300 MHz	21.21	21.09	21.05	21.20	20.98	21.00	20.53	20.12
CH 64	5320 MHz	21.17	21.13	21.11	21.15	21.00	20.98	20.57	20.10
CH 100	5500 MHz	21.57	21.44	21.40	21.03	21.07	21.00	20.74	20.40
CH 116	5580 MHz	21.41	21.15	21.16	21.21	21.10	21.07	20.25	19.85
CH 140	5700 MHz	20.21	20.18	20.14	20.16	20.12	20.20	19.82	19.62

Channel	Frequency	5GHz 802.11n HT40 Average Power (dBm)							
		Data Rate							
		MCS0	MCS1	MCS2	MCS3	MCS4	MCS5	MCS6	MCS7
CH 38	5190MHz	13.13	12.83	12.96	12.95	12.93	12.87	13.04	11.97
CH 46	5230MHz	**15.06**	14.91	14.92	15.05	14.45	13.79	12.89	11.83
CH 54	5270MHz	14.93	14.51	14.78	14.61	14.38	13.62	12.78	11.63
CH 62	5310MHz	11.83	11.82	11.78	11.82	11.80	11.76	11.80	11.34
CH 102	5510MHz	13.08	13.04	13.06	13.02	13.02	13.06	13.07	12.72
CH 110	5550MHz	**15.06**	15.01	15.02	15.02	14.50	14.01	13.03	11.92
CH 134	5670MHz	14.80	14.76	14.72	14.65	14.23	13.95	12.76	11.70

Channel	Frequency	5GHz 802.11n HT40 Peak Power (dBm)							
		Data Rate							
		MCS0	MCS1	MCS2	MCS3	MCS4	MCS5	MCS6	MCS7
CH 38	5190MHz	20.06	19.97	19.80	20.05	20.01	19.84	20.02	19.02
CH 46	5230MHz	20.71	20.32	20.56	20.43	20.17	20.01	19.57	18.91
CH 54	5270MHz	20.76	20.49	20.36	20.37	20.20	20.12	19.66	19.18
CH 62	5310MHz	19.54	19.50	19.43	19.52	19.46	19.49	19.35	19.27
CH 102	5510MHz	20.26	20.11	20.16	20.18	20.14	20.02	19.46	19.47
CH 110	5550MHz	20.94	20.61	20.66	20.65	20.56	20.34	19.48	19.62
CH 134	5670MHz	20.55	20.50	20.51	20.47	20.43	20.31	19.40	19.42

2.3 Test Mode

Final test mode of conducted test items and radiated spurious emissions are considering the modulation and worse data rates from the power table described in section 2.2.

Modulation	Data Rate
802.11a	**6 Mbps**
802.11n HT20	**MCS0**
802.11n HT40	**MCS0**

AC Conducted Emission	Mode 1 : GSM850 Idle + Bluetooth Link + WLAN (5GHz) Link + USB Cable (Charging from Adapter 1) + Earphone + MP3 Mode 2 : GSM850 Idle + Bluetooth Link + WLAN (5GHz) Link + USB Cable (Charging from Adapter 2) + Earphone + MP3
Remark: The worst case of conducted emission is mode 2; only the test data of it was reported.	

Ch. #		Band I：5150-5250 MHz	Band II：5250-5350 MHz	Band III：5470-5725MHz
		802.11a	802.11a	802.11a
L	Low	36	52	100
M	Middle	44	60	116
H	High	48	64	140

Ch. #		Band I：5150-5250 MHz	Band II：5250-5350 MHz	Band III：5470-5725MHz
		802.11n HT20	802.11n HT20	802.11n HT20
L	Low	36	52	100
M	Middle	44	60	116
H	High	48	64	140

Ch. #		Band I：5150-5250 MHz	Band II：5250-5350 MHz	Band III：5470-5725MHz
		802.11n HT40	802.11n HT40	802.11n HT40
L	Low	38	54	102
M	Middle	-	-	110
H	High	46	62	134

2.4 Connection Diagram of Test System

<WLAN Tx Mode for EUT Standalone>

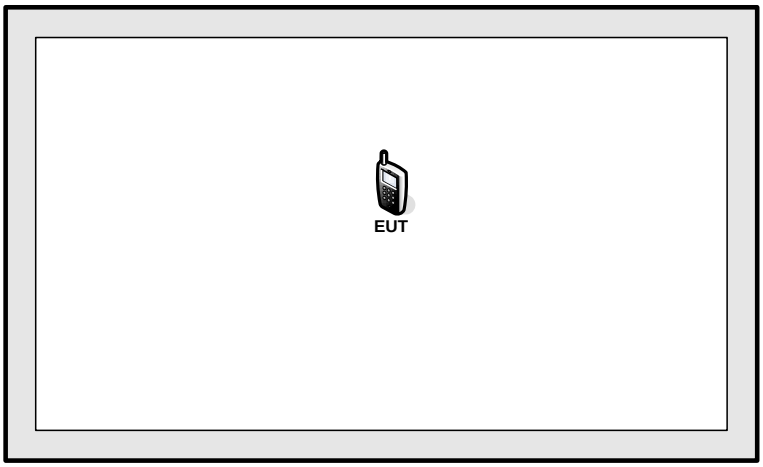

<WLAN Tx Mode with Adapter 1>

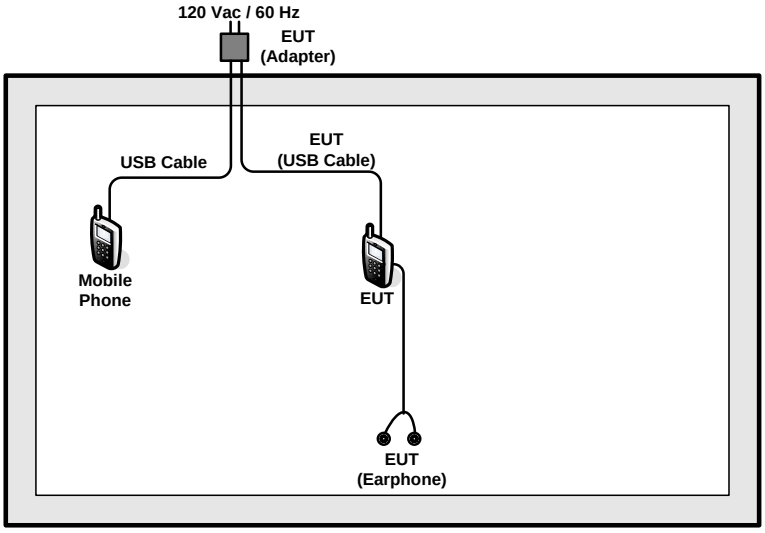

<WLAN Tx Mode with Adapter 1 >

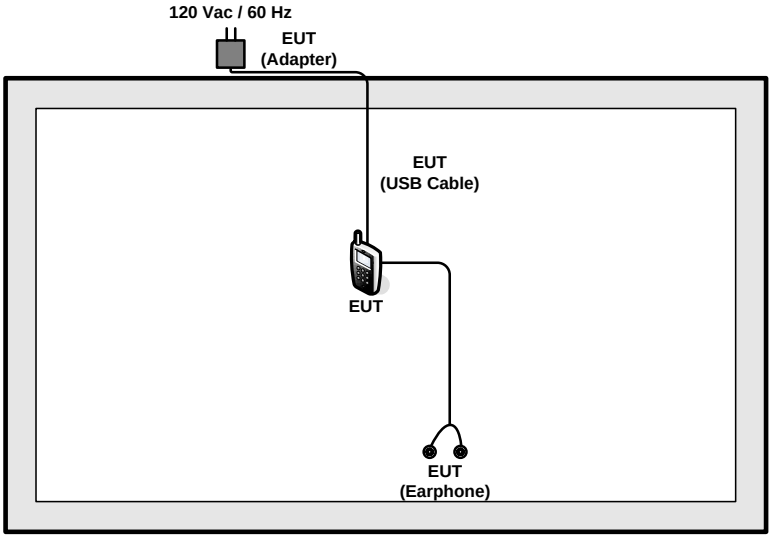

<AC Conducted Emissions with Adapter 1>

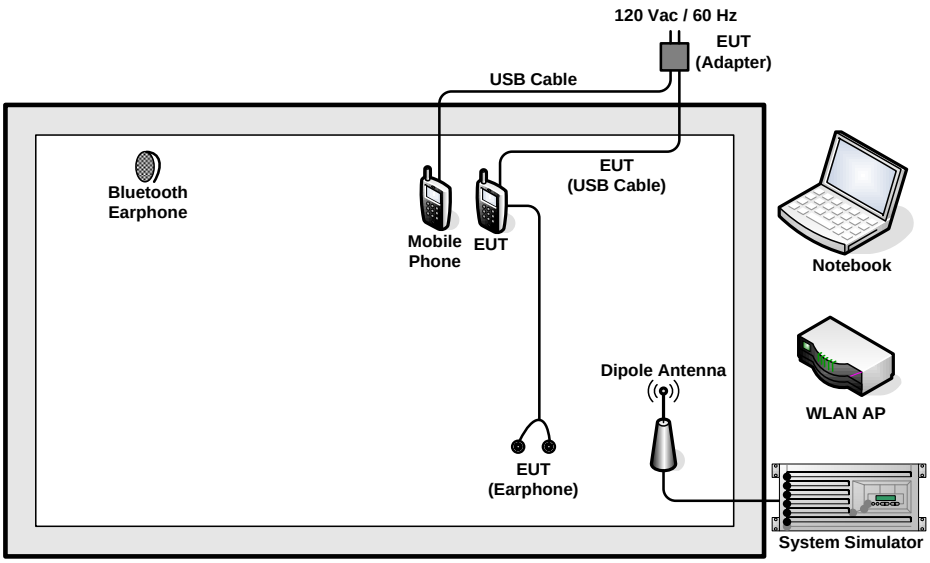

<AC Conducted Emissions with Adapter 2>

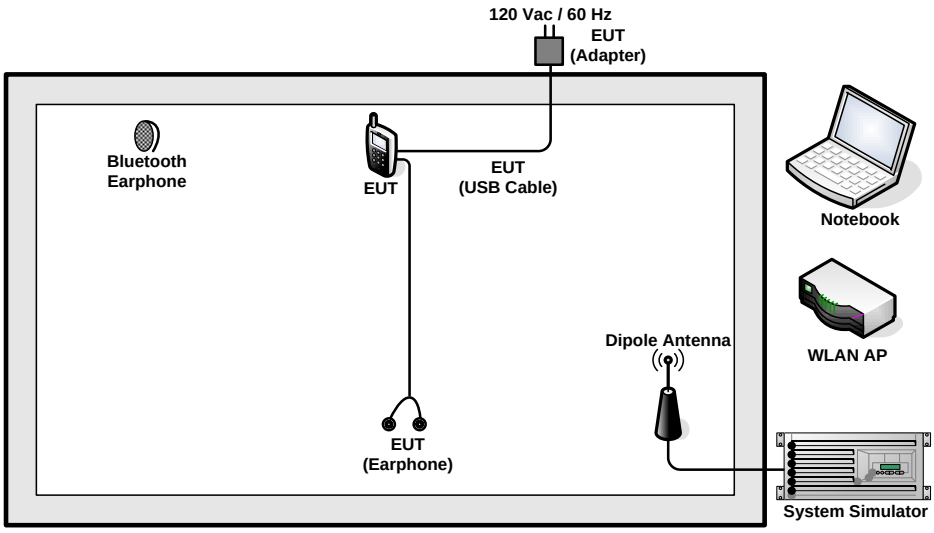

2.5 Support Unit used in test configuration and system

Item	Equipment	Trade Name	Model Name	FCC ID	Data Cable	Power Cord
1.	System Simulator	Anritsu	MT8820C	N/A	N/A	Unshielded, 1.8 m
2.	Bluetooth Earphone	Sony Ericsson	MW600	PY7DDA-2029	N/A	N/A
3.	WLAN AP	D-Link	DIR-628	KA2DIR628A2	N/A	Unshielded, 1.8 m
4.	Notebook	DELL	Latitude E6320	FCC DoC/ Contains FCC ID: QDS-BRCM1054	N/A	AC I/P: Unshielded, 1.2 m DC O/P: Shielded, 1.8 m
5.	Mobile Cellular Phone	Motorola	4602	IHDT56UB1	N/A	N/A
6.	SD Card	SanDisk	MicroSD HC	FCC DoC	N/A	N/A

2.6 EUT Operation Test Setup

For WLAN function, programmed RF utility, “QRCT” installed in the EUT provide functions like channel selection and power level for continuous transmitting and receiving signals.

2.7 Measurement Results Explanation Example

For all conducted test items:

The offset level is set in the spectrum analyzer to compensate the RF cable loss and attenuator factor between EUT conducted output port and spectrum analyzer. With the offset compensation, the spectrum analyzer reading level is exactly the EUT RF output level.

Example :

The spectrum analyzer offset is derived from RF cable loss and attenuator factor.

Offset = RF cable loss + attenuator factor.

Following shows an offset computation example with cable loss 4.2 dB and 10dB attenuator.

Offset(dB) = RF cable loss(dB) + attenuator factor(dB).

= 4.2 + 10 = 14.2 (dB)

3 Test Result

3.1 26dB & 99% Occupied Bandwidth Measurement

3.1.1 Description of 26dB & 99% Occupied Bandwidth

This section is for reporting purpose only.

There is no restriction limits for bandwidth.

3.1.2 Measuring Instruments

The measuring equipment is listed in the section 4 of this test report.

3.1.3 Test Procedures

1. The testing follows FCC KDB 789033 D02 General UNII Test Procedures New Rules v01. Section C) Emission bandwidth
2. Set RBW = approximately 1% of the emission bandwidth.
3. Set the VBW > RBW.
4. Detector = Peak.
5. Trace mode = max hold
6. Measure the maximum width of the emission that is 26 dB down from the peak of the emission. Compare this with the RBW setting of the analyzer. Readjust RBW and repeat measurement as needed until the RBW/EBW ratio is approximately 1%.
7. For 99% Bandwidth Measurement, the spectrum analyzer's resolution bandwidth (RBW) is set 1MHz and set the Video bandwidth (VBW) ≥ 3 * RBW.
8. Measure and record the results in the test report.

3.1.4 Test Setup

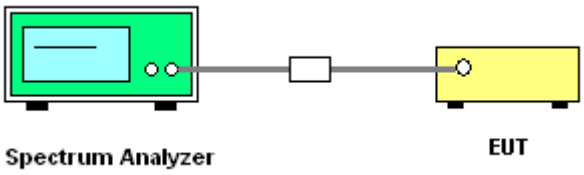

3.1.5 Test Result of 26dB Bandwidth Plots

Please refer to Appendix A.

Maximum 26dB Bandwidth

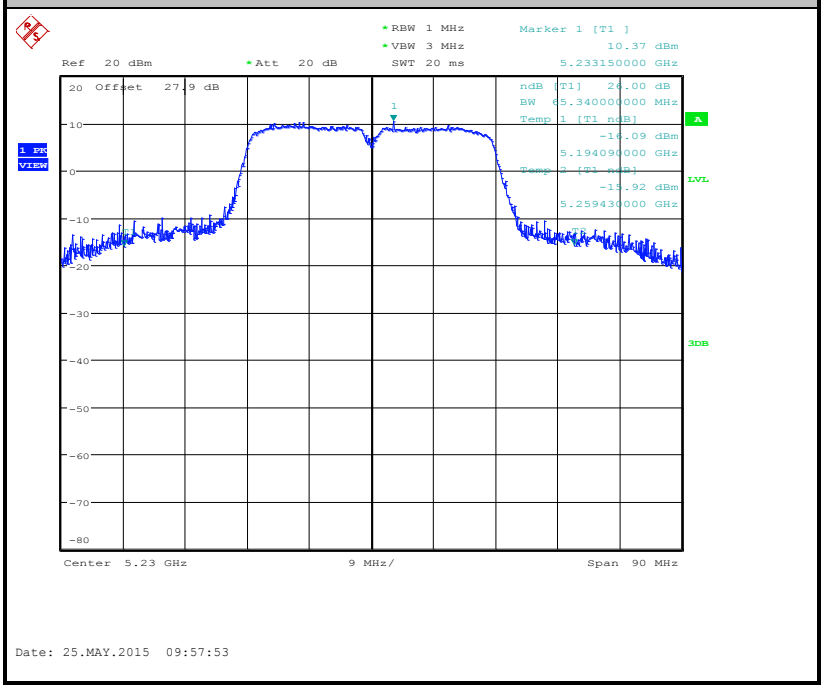

Maximum 99% Occupied Bandwidth

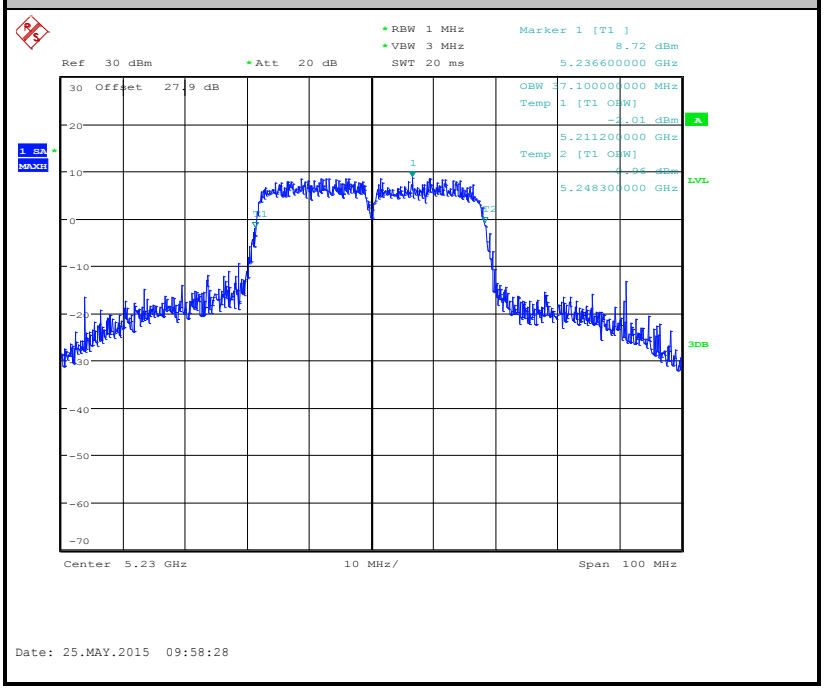

3.2 Maximum Conducted Output Power Measurement

3.2.1 Limit of Maximum Conducted Output Power

For mobile and portable client devices in the 5.15–5.25 GHz band, the maximum conducted output power over the frequency band of operation shall not exceed 250 mW.

For the 5.25–5.35 GHz and 5.47–5.725 GHz bands, the maximum conducted output power over the frequency bands of operation shall not exceed the lesser of 250 mW or 11 dBm 10 log B, where B is the 26 dB emission bandwidth in megahertz.

If transmitting antennas of directional gain greater than 6 dBi are used, the peak output power shall be reduced by the amount in dB that the directional gain of the antenna exceeds 6 dBi.

Note that U-NII-2 band, devices with a maximum e.i.r.p. greater than 500 mW shall implement TPC in order to have the capability to operate at least 6 dB below the maximum permitted e.i.r.p. of 1 W.

3.2.2 Measuring Instruments

The measuring equipment is listed in the section 4 of this test report.

3.2.3 Test Procedures

The testing follows Method PM of FCC KDB 789033 D02 General UNII Test Procedures New Rules v01.

Method PM (Measurement using an RF average power meter):

1. Measurement is performed using a wideband RF power meter.
2. The EUT is configured to transmit continuously with a consistent duty cycle at its maximum power control level.
3. Measure the average power of the transmitter, and the average power is corrected with duty factor, 10 log(1/x), where x is the duty cycle.

3.2.4 Test Setup

For normal channel:

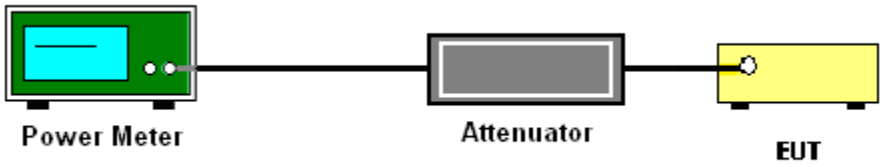

For straddle channel:

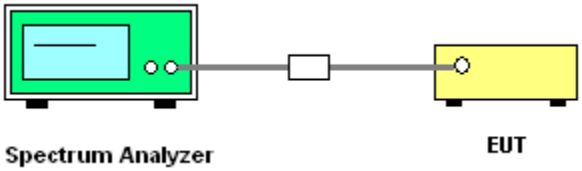

3.2.5 Test Result of Maximum Conducted Output Power

Please refer to Appendix A.

3.3 Power Spectral Density Measurement

3.3.1 Limit of Power Spectral Density

For mobile and portable client devices in the 5.15–5.25 GHz band, the maximum power spectral density shall not exceed 11dBm in any 1 megahertz band.

For the 5.25–5.35 GHz and 5.47–5.725 GHz bands, the maximum power spectral density shall not exceed 11 dBm in any 1 megahertz band.

If transmitting antennas of directional gain greater than 6 dBi are used, the peak output power shall be reduced by the amount in dB that the directional gain of the antenna exceeds 6 dBi.

3.3.2 Measuring Instruments

The measuring equipment is listed in the section 4 of this test report.

3.3.3 Test Procedures

The testing follows FCC KDB 789033 D02 General UNII Test Procedures New Rules v01.

Section F) Maximum power spectral density.

 # Method SA-2 #

(trace averaging across on and off times of the EUT transmissions, followed by duty cycle correction).

1. The testing follows Method SA-2 of FCC KDB 789033 D02 General UNII Test Procedures New Rules v01.
   - Measure the duty cycle.
   - Set span to encompass the entire emission bandwidth (EBW) of the signal.
   - Set RBW = 1 MHz.
   - Set VBW ≥ 3 MHz.
   - Number of points in sweep ≥ 2 Span / RBW.
   - Sweep time = auto.
   - Detector = RMS
   - Trace average at least 100 traces in power averaging mode.
   - Add 10 log(1/x), where x is the duty cycle, to the measured power in order to compute the average power during the actual transmission times. For example, add 10 log(1/0.25) = 6 dB if the duty cycle is 25 percent.
2. The RF output of EUT was connected to the spectrum analyzer by a low loss cable.
3. Each plot has already offset with cable loss, and attenuator loss. Measure the PPSD and record it.

3.3.4 Test Setup

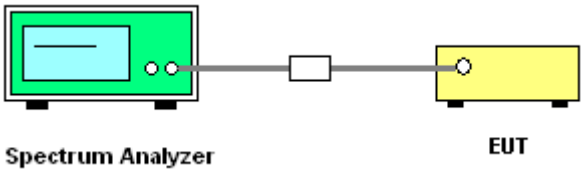

3.3.5 Test Result of Power Spectral Density

Please refer to Appendix A.

Worst Case Power Spectral Density(dBm/MHz)

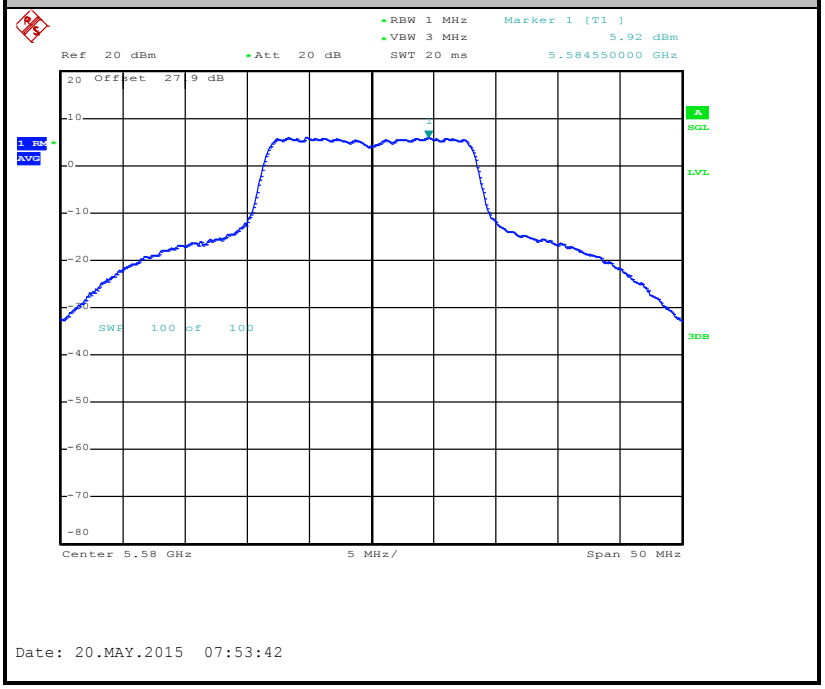

Note: Average Power Density (dB) = Measured value+ Duty Factor

3.4 Unwanted Radiated Emission Measurement

This section as specified in FCC Part 15.407(b) is to measure unwanted emissions through radiated measurement for band edge spurious emissions and out of band emissions measurement. The unwanted emissions shall comply with 15.407(b)(1) to (6), and restricted bands per FCC Part15.205.

3.4.1 Limit of Unwanted Emissions

(1) For transmitters operating in the 5150-5250 MHz band: all emissions outside of the 5150-5350 MHz band shall not exceed an EIRP of –27dBm/MHz.

For transmitters operating in the 5250-5350 MHz band: all emissions outside of the 5150-5350 MHz band shall not exceed an EIRP of -27 dBm/MHz. Devices operating in the 5250-5350 MHz band that generate emissions in the 5150-5250 MHz band must meet all applicable technical requirements for operation in the 5150-5250 MHz band (including indoor use) or alternatively meet an out-of-band emission EIRP limit of -27 dBm/MHz in the 5150-5250 MHz band.

For transmitters operating in the 5470-5725MHz band: all emissions outside of the 5470-5725MHz band shall not exceed an EIRP of -27 dBm/MHz.

(2) Unwanted spurious emissions fallen in restricted bands per FCC Part15.205 shall comply with the general field strength limits set forth in § 15.209 as below table,

Frequency (MHz)	Field Strength (microvolts/meter)	Measurement Distance (meters)
0.009 – 0.490	2400/F(kHz)	300
0.490 – 1.705	24000/F(kHz)	30
1.705 – 30.0	30	30
30 – 88	100	3
88 – 216	150	3
216 - 960	200	3
Above 960	500	3

Note: The following formula is used to convert the EIRP to field strength.

$$E=\frac{1000000\sqrt{30P}}{3}$$ μV/m, where P is the eirp (Watts)

EIRP (dBm)	Field Strength at 3m (dBμV/m)
-17	78.3
- 27	68.3

(3) KDB789033 v01 G)2)c) As specified in 15.407(b), emissions above 1000 MHz that are outside of the restricted bands are subject to a peak emission limit of -27 dBm/MHz (or -17 dBm/MHz as specified in 15.407(b)(4)). However, an out-of-band emission that complies with both the average and peak limits of 15.209 is not required to satisfy the -27 dBm/MHz or -17 dBm/MHz peak emission limit.

3.4.2 Measuring Instruments

The measuring equipment is listed in the section 4 of this test report.

3.4.3 Test Procedures

1. The testing follows FCC KDB 789033 D02 General UNII Test Procedures New Rules v01. Section G) Unwanted emissions measurement.

(1) Procedure for Unwanted Emissions Measurements Below 1000MHz

- RBW = 120 kHz
- VBW = 300 kHz
- Detector = Peak
- Trace mode = max hold

(2) Procedure for Peak Unwanted Emissions Measurements Above 1000 MHz

- RBW = 1 MHz
- VBW ≥ 3 MHz
- Detector = Peak
- Sweep time = auto
- Trace mode = max hold

(3) Procedures for Average Unwanted Emissions Measurements Above 1000MHz

- RBW = 1 MHz
- VBW = 10 Hz, when duty cycle is no less than 98 percent.
- VBW ≥ 1/T, when duty cycle is less than 98 percent where T is the minimum transmission duration over which the transmitter is on and is transmitting at its maximum power control level for the tested mode of operation.

Band	Duty Cycle(%)	T(μs)	1/T(kHz)	VBW Setting
802.11a	87.82	1370.00	0.73	1kHz
802.11n HT20	86.49	1280.00	0.78	1kHz
802.11n HT40	71.01	490.00	2.04	3kHz

2. The EUT was placed on a turntable with 0.8 meter for frequency below 1GHz and 1.5 meter for frequency above 1GHz respectively above ground.
3. The EUT was set 3 meters from the interference receiving antenna which was mounted on the top of a variable height antenna tower.
4. The antenna is a broadband antenna and its height is adjusted between one meter and four meters above ground to find the maximum value of the field strength for both horizontal polarization and vertical polarization of the antenna.
5. For each suspected emission, the EUT was arranged to its worst case and then adjust the antenna tower (from 1 m to 4 m) and turntable (from 0 degree to 360 degrees) to find the maximum reading.
6. For testing below 1GHz, if the emission level of the EUT in peak mode was 3 dB lower than the limit specified, then peak values of EUT will be reported, otherwise, the emissions will be repeated one by one using the CISPR quasi-peak method and reported.
7. For testing above 1GHz, the emission level of the EUT in peak mode was 20dB lower than average limit (that means the emission level in average mode also complies with the limit in average mode), then peak values of EUT will be reported, otherwise, the emissions will be measured in average mode again and reported.

3.4.4 Test Setup

For radiated emissions below 30MHz

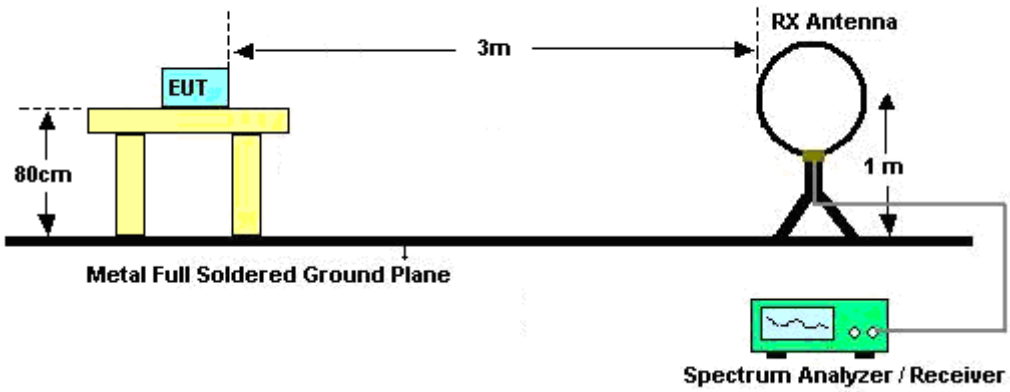

For radiated emissions from 30MHz to 1GHz

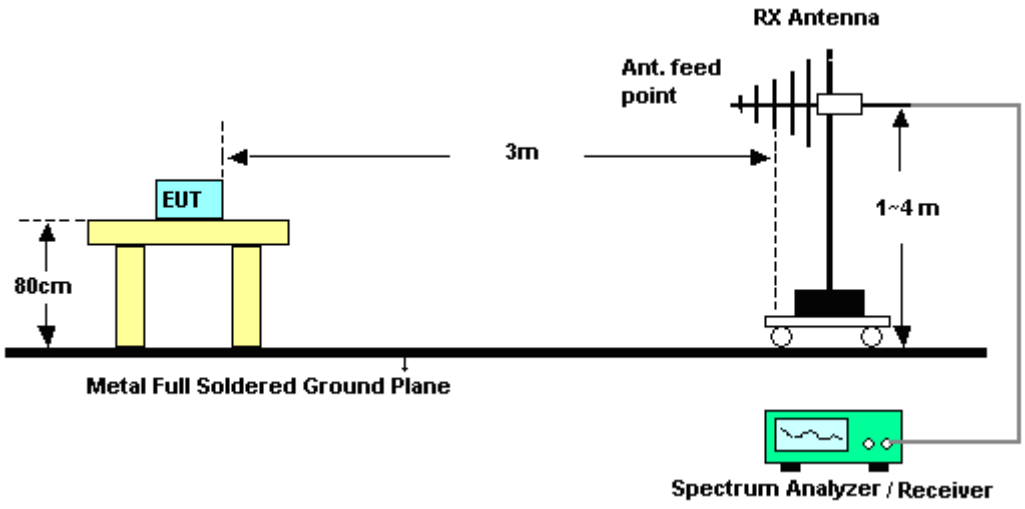

For radiated emissions above 1GHz

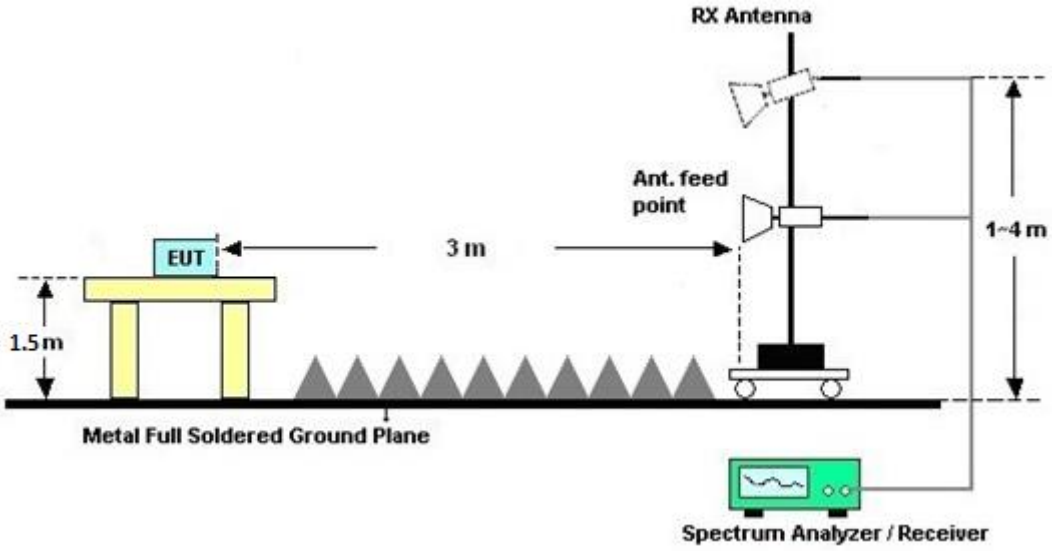

3.4.5 Test Results of Radiated Emissions (9 kHz ~ 30 MHz)

The low frequency, which started from 9 kHz to 30MHz, was pre-scanned and the result which was 20dB lower than the limit line per 15.31(o) was not reported.

3.4.6 Test Result of Radiated Band Edges

Please refer to Appendix A.

3.4.7 Test Result of Unwanted Radiated Emission (30MHz ~ 10th Harmonic)

Please refer to Appendix A.

3.5 AC Conducted Emission Measurement

3.5.1 Limit of AC Conducted Emission

For equipment that is designed to be connected to the public utility (AC) power line, the radio frequency voltage that is conducted back onto the AC power line on any frequency or frequencies within the band 150 kHz to 30 MHz shall not exceed the limits in the following table.

Frequency of emission (MHz)	Conducted limit (dBμV)	
	Quasi-peak	Average
0.15-0.5	66 to 56*	56 to 46*
0.5-5	56	46
5-30	60	50

*Decreases with the logarithm of the frequency.

3.5.2 Measuring Instruments

The measuring equipment is listed in the section 4 of this test report.

3.5.3 Test Procedures

1. The EUT was placed 0.4 meter from the conducting wall of the shielding room was kept at least 80 centimeters from any other grounded conducting surface.
2. Connect EUT to the power mains through a line impedance stabilization network (LISN).
3. All the support units are connecting to the other LISN.
4. The LISN provides 50 ohm coupling impedance for the measuring instrument.
5. The FCC states that a 50 ohm, 50 microhenry LISN should be used.
6. Both sides of AC line were checked for maximum conducted interference.
7. The frequency range from 150 kHz to 30 MHz was searched.
8. Set the test-receiver system to Peak Detect Function and specified bandwidth with Maximum Hold Mode.

3.5.4 Test Setup

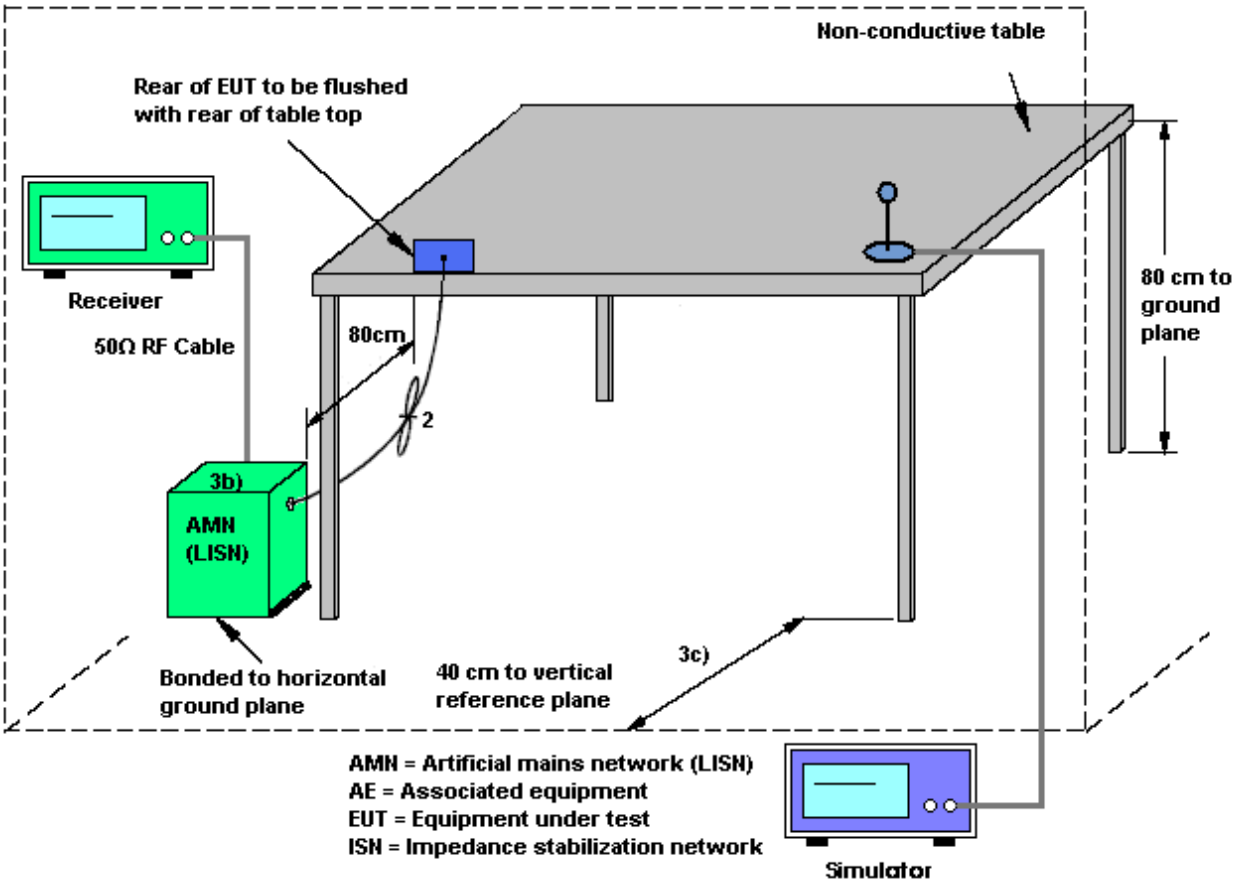

3.5.5 Test Result of AC Conducted Emission

Test Mode :	Mode 2	**Temperature :**	21~23℃
Test Engineer :	Eric Jeng	**Relative Humidity :**	59~61%
Test Voltage :	120Vac / 60Hz	**Phase :**	Line
Function Type :	GSM850 Idle + Bluetooth Link + WLAN (5GHz) Link + USB Cable (Charging from Adapter 2) + Earphone + MP3		

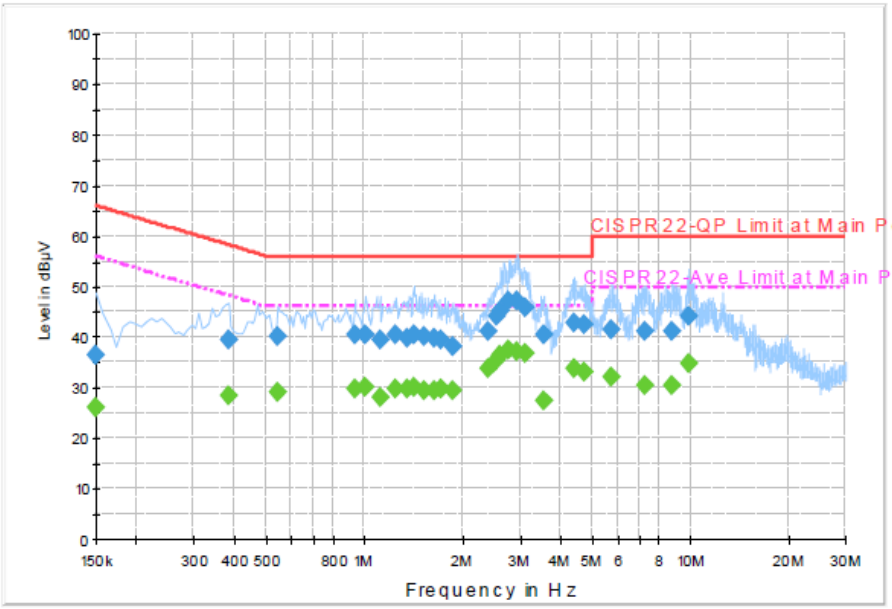

Final Result : QuasiPeak

Frequency (MHz)	QuasiPeak (dBµV)	Filter	Line	Corr. (dB)	Margin (dB)	Limit (dBµV)
0.150000	36.6	Off	L1	19.5	29.4	66.0
0.382000	39.5	Off	L1	19.5	18.7	58.2
0.542000	40.2	Off	L1	19.4	15.8	56.0
0.934000	40.6	Off	L1	19.6	15.4	56.0
1.006000	40.3	Off	L1	19.5	15.7	56.0
1.118000	39.4	Off	L1	19.5	16.6	56.0
1.254000	40.5	Off	L1	19.6	15.5	56.0
1.350000	39.9	Off	L1	19.6	16.1	56.0
1.422000	40.3	Off	L1	19.5	15.7	56.0
1.534000	40.2	Off	L1	19.5	15.8	56.0
1.638000	39.9	Off	L1	19.5	16.1	56.0
1.726000	39.3	Off	L1	19.6	16.7	56.0
1.862000	38.0	Off	L1	19.5	18.0	56.0
2.414000	41.1	Off	L1	19.7	14.9	56.0
2.550000	44.0	Off	L1	19.7	12.0	56.0
2.614000	45.3	Off	L1	19.7	10.7	56.0
2.766000	47.2	Off	L1	19.7	8.8	56.0
2.958000	47.3	Off	L1	19.7	8.7	56.0

Test Mode :	Mode 2	**Temperature :**	21~23℃
Test Engineer :	Eric Jeng	**Relative Humidity :**	59~61%
Test Voltage :	120Vac / 60Hz	**Phase :**	Line
Function Type :	GSM850 Idle + Bluetooth Link + WLAN (5GHz) Link + USB Cable (Charging from Adapter 2) + Earphone + MP3		

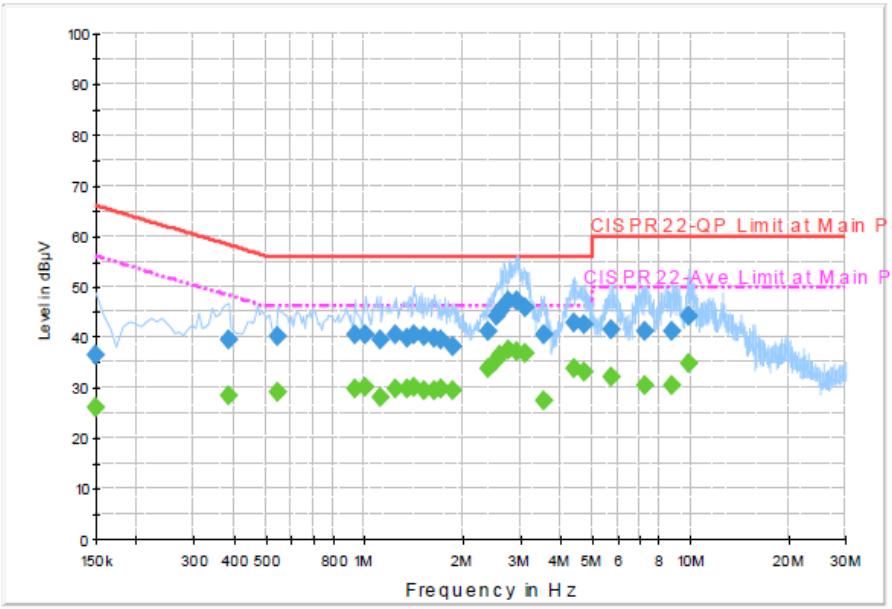

Final Result : QuasiPeak

Frequency (MHz)	QuasiPeak (dBµV)	Filter	Line	Corr. (dB)	Margin (dB)	Limit (dBµV)
3.110000	45.8	Off	L1	19.7	10.2	56.0
3.542000	40.4	Off	L1	19.7	15.6	56.0
4.414000	42.7	Off	L1	19.7	13.3	56.0
4.766000	42.4	Off	L1	19.8	13.6	56.0
5.742000	41.6	Off	L1	19.7	18.4	60.0
7.254000	41.1	Off	L1	19.8	19.0	60.0
8.822000	41.2	Off	L1	19.8	18.9	60.0
9.910000	44.0	Off	L1	19.9	16.0	60.0

Test Mode :	Mode 2	**Temperature :**	21~23℃
Test Engineer :	Eric Jeng	**Relative Humidity :**	59~61%
Test Voltage :	120Vac / 60Hz	**Phase :**	Line
Function Type :	GSM850 Idle + Bluetooth Link + WLAN (5GHz) Link + USB Cable (Charging from Adapter 2) + Earphone + MP3		

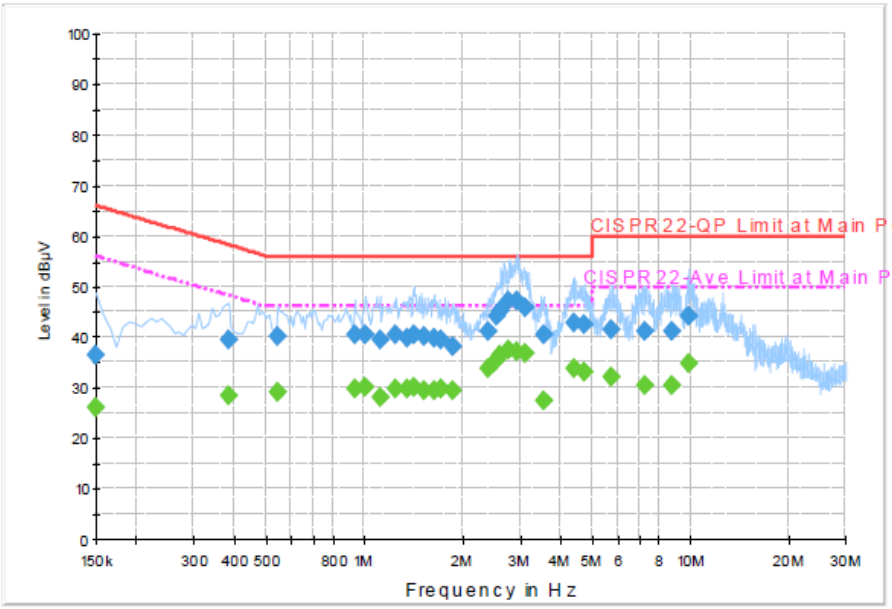

Final Result : Average

Frequency (MHz)	Average (dBµV)	Filter	Line	Corr. (dB)	Margin (dB)	Limit (dBµV)
0.150000	26.1	Off	L1	19.5	29.9	56.0
0.382000	28.3	Off	L1	19.5	19.9	48.2
0.542000	28.9	Off	L1	19.4	17.1	46.0
0.934000	29.6	Off	L1	19.6	16.4	46.0
1.006000	30.2	Off	L1	19.5	15.8	46.0
1.118000	28.1	Off	L1	19.5	17.9	46.0
1.254000	29.7	Off	L1	19.6	16.3	46.0
1.350000	29.7	Off	L1	19.6	16.3	46.0
1.422000	30.0	Off	L1	19.5	16.0	46.0
1.534000	29.6	Off	L1	19.5	16.4	46.0
1.638000	29.6	Off	L1	19.5	16.4	46.0
1.726000	29.9	Off	L1	19.6	16.1	46.0
1.862000	29.4	Off	L1	19.5	16.6	46.0
2.414000	33.8	Off	L1	19.7	12.2	46.0
2.550000	35.6	Off	L1	19.7	10.4	46.0
2.614000	36.6	Off	L1	19.7	9.4	46.0
2.766000	37.5	Off	L1	19.7	8.5	46.0
2.958000	37.0	Off	L1	19.7	9.0	46.0

Test Mode :	Mode 2	**Temperature :**	21~23℃
Test Engineer :	Eric Jeng	**Relative Humidity :**	59~61%
Test Voltage :	120Vac / 60Hz	**Phase :**	Line
Function Type :	GSM850 Idle + Bluetooth Link + WLAN (5GHz) Link + USB Cable (Charging from Adapter 2) + Earphone + MP3		

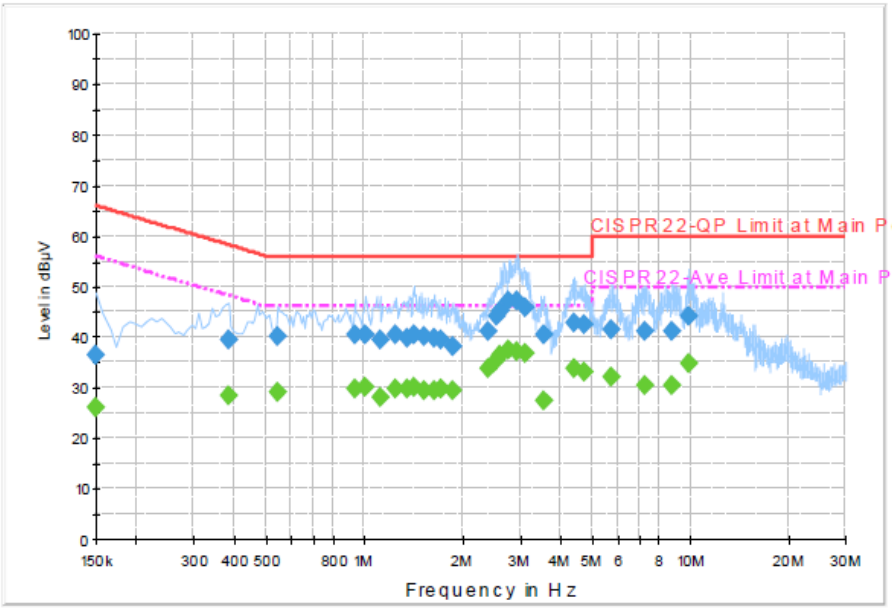

Final Result : Average

Frequency (MHz)	Average (dBµV)	Filter	Line	Corr. (dB)	Margin (dB)	Limit (dBµV)
3.110000	36.9	Off	L1	19.7	9.1	46.0
3.542000	27.5	Off	L1	19.7	18.5	46.0
4.414000	33.7	Off	L1	19.7	12.3	46.0
4.766000	33.1	Off	L1	19.8	12.9	46.0
5.742000	32.3	Off	L1	19.7	17.7	50.0
7.254000	30.5	Off	L1	19.8	19.5	50.0
8.822000	30.5	Off	L1	19.8	19.5	50.0
9.910000	34.7	Off	L1	19.9	15.3	50.0

Test Mode :	Mode 2	**Temperature :**	21~23℃
Test Engineer :	Eric Jeng	**Relative Humidity :**	59~61%
Test Voltage :	120Vac / 60Hz	**Phase :**	Neutral
Function Type :	GSM850 Idle + Bluetooth Link + WLAN (5GHz) Link + USB Cable (Charging from Adapter 2) + Earphone + MP3		

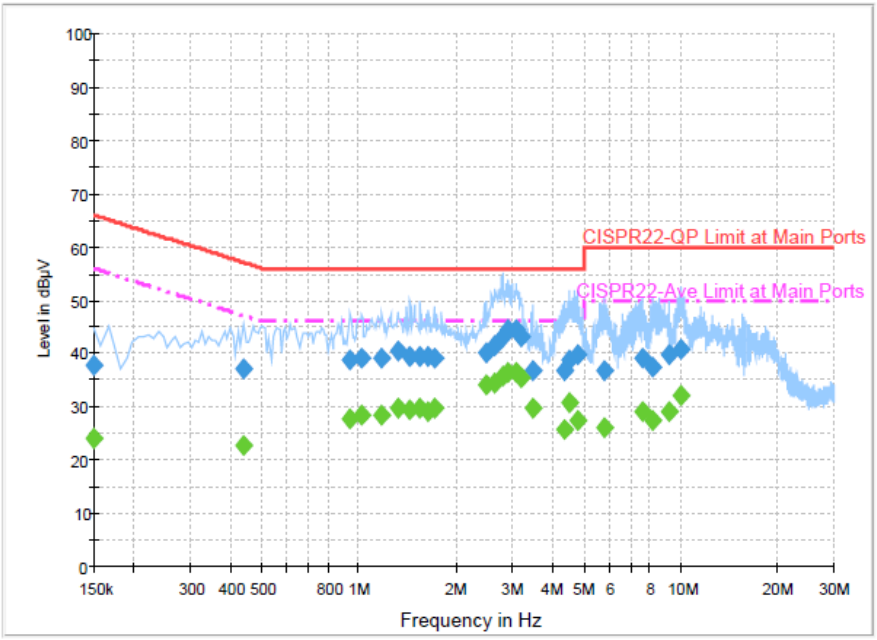

Final Result : QuasiPeak

Frequency (MHz)	QuasiPeak (dBµV)	Filter	Line	Corr. (dB)	Margin (dB)	Limit (dBµV)
0.150000	37.8	Off	N	19.5	28.2	66.0
0.438000	37.2	Off	N	19.5	19.9	57.1
0.942000	38.9	Off	N	19.6	17.1	56.0
1.022000	39.0	Off	N	19.5	17.0	56.0
1.182000	39.2	Off	N	19.6	16.8	56.0
1.318000	40.3	Off	N	19.6	15.7	56.0
1.446000	39.6	Off	N	19.5	16.4	56.0
1.550000	39.3	Off	N	19.5	16.7	56.0
1.646000	39.6	Off	N	19.6	16.4	56.0
1.718000	39.2	Off	N	19.6	16.8	56.0
2.494000	40.3	Off	N	19.7	15.7	56.0
2.638000	41.6	Off	N	19.7	14.4	56.0
2.798000	43.3	Off	N	19.8	12.7	56.0
2.918000	44.4	Off	N	19.7	11.6	56.0

Test Mode :	Mode 2	**Temperature :**	21~23℃
Test Engineer :	Eric Jeng	**Relative Humidity :**	59~61%
Test Voltage :	120Vac / 60Hz	**Phase :**	Neutral
Function Type :	GSM850 Idle + Bluetooth Link + WLAN (5GHz) Link + USB Cable (Charging from Adapter 2) + Earphone + MP3		

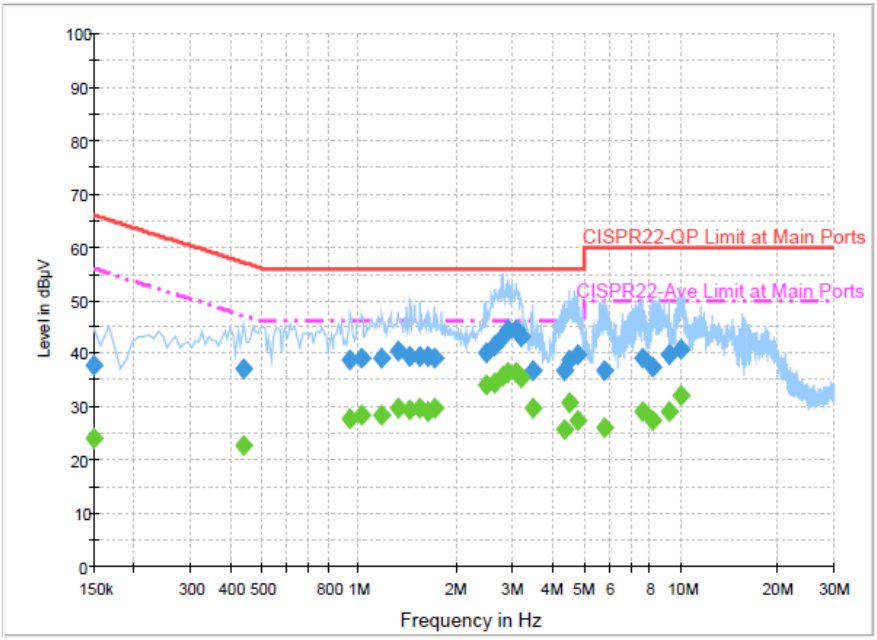

Final Result : QuasiPeak

Frequency (MHz)	QuasiPeak (dBµV)	Filter	Line	Corr. (dB)	Margin (dB)	Limit (dBµV)
3.094000	44.4	Off	N	19.7	11.6	56.0
3.190000	43.1	Off	N	19.7	12.9	56.0
3.470000	36.8	Off	N	19.7	19.2	56.0
4.342000	36.8	Off	N	19.7	19.2	56.0
4.526000	38.9	Off	N	19.7	17.1	56.0
4.798000	39.8	Off	N	19.7	16.2	56.0
5.798000	36.7	Off	N	19.7	23.3	60.0
7.614000	39.2	Off	N	19.7	20.8	60.0
8.198000	37.6	Off	N	19.9	22.4	60.0
9.230000	39.7	Off	N	19.8	20.3	60.0
10.046000	41.0	Off	N	19.9	19.0	60.0

Test Mode :	Mode 2	**Temperature :**	21~23℃
Test Engineer :	Eric Jeng	**Relative Humidity :**	59~61%
Test Voltage :	120Vac / 60Hz	**Phase :**	Neutral
Function Type :	GSM850 Idle + Bluetooth Link + WLAN (5GHz) Link + USB Cable (Charging from Adapter 2) + Earphone + MP3		

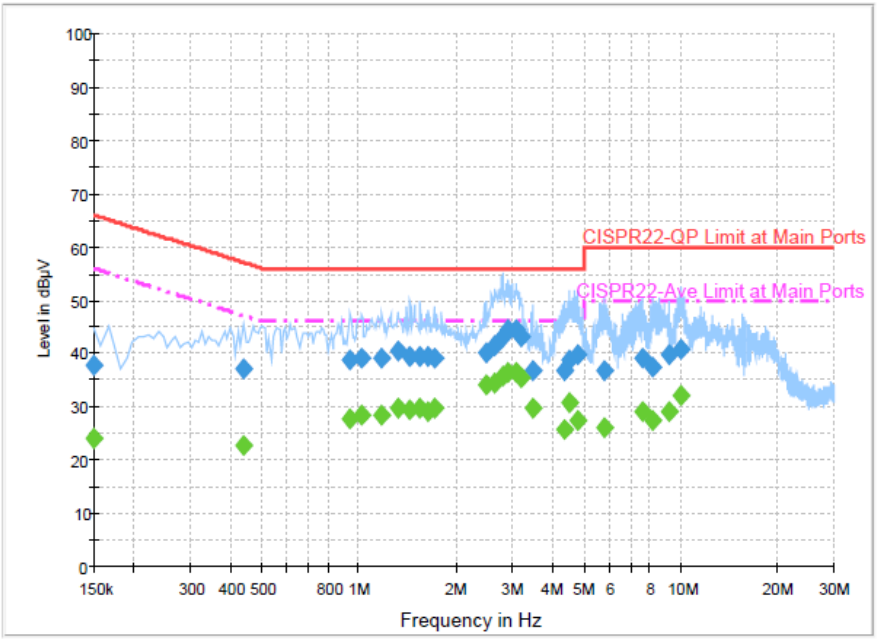

Final Result : Average

Frequency (MHz)	Average (dBµV)	Filter	Line	Corr. (dB)	Margin (dB)	Limit (dBµV)
0.150000	24.0	Off	N	19.5	32.0	56.0
0.438000	22.7	Off	N	19.5	24.4	47.1
0.942000	27.8	Off	N	19.6	18.2	46.0
1.022000	28.3	Off	N	19.5	17.7	46.0
1.182000	28.3	Off	N	19.6	17.7	46.0
1.318000	29.7	Off	N	19.6	16.3	46.0
1.446000	29.4	Off	N	19.5	16.6	46.0
1.550000	29.8	Off	N	19.5	16.2	46.0
1.646000	29.0	Off	N	19.6	17.0	46.0
1.718000	29.8	Off	N	19.6	16.2	46.0
2.494000	34.1	Off	N	19.7	11.9	46.0
2.638000	34.4	Off	N	19.7	11.6	46.0
2.798000	35.6	Off	N	19.8	10.4	46.0
2.918000	36.3	Off	N	19.7	9.7	46.0

Test Mode :	Mode 2	**Temperature :**	21~23℃
Test Engineer :	Eric Jeng	**Relative Humidity :**	59~61%
Test Voltage :	120Vac / 60Hz	**Phase :**	Neutral
Function Type :	GSM850 Idle + Bluetooth Link + WLAN (5GHz) Link + USB Cable (Charging from Adapter 2) + Earphone + MP3		

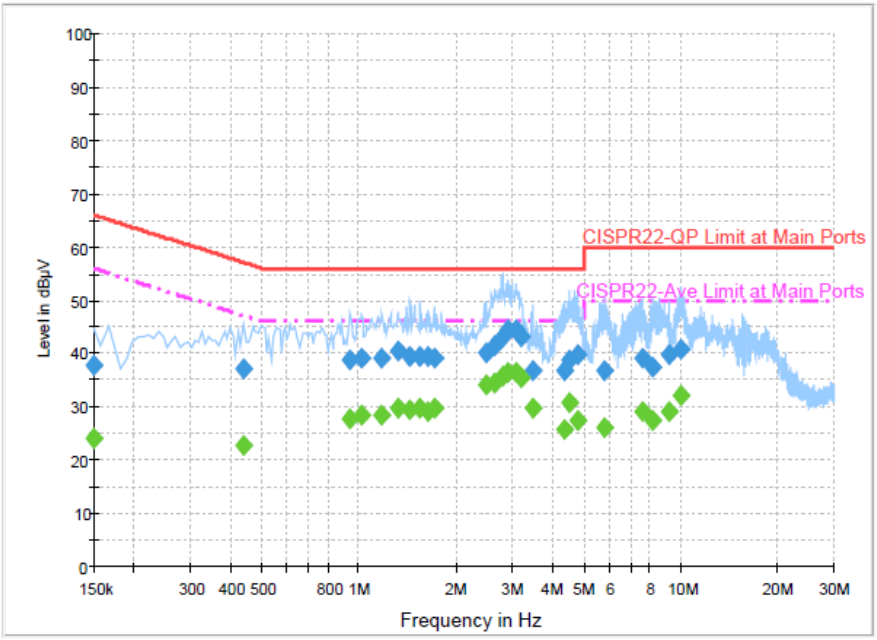

Final Result : Average

Frequency (MHz)	Average (dBµV)	Filter	Line	Corr. (dB)	Margin (dB)	Limit (dBµV)
3.094000	36.5	Off	N	19.7	9.5	46.0
3.190000	35.4	Off	N	19.7	10.6	46.0
3.470000	29.7	Off	N	19.7	16.3	46.0
4.342000	25.8	Off	N	19.7	20.2	46.0
4.526000	30.6	Off	N	19.7	15.4	46.0
4.798000	27.5	Off	N	19.7	18.5	46.0
5.798000	26.0	Off	N	19.7	24.0	50.0
7.614000	29.0	Off	N	19.7	21.0	50.0
8.198000	27.6	Off	N	19.9	22.4	50.0
9.230000	28.9	Off	N	19.8	21.1	50.0
10.046000	32.2	Off	N	19.9	17.8	50.0

3.6 Frequency Stability Measurement

3.6.1 Limit of Frequency Stability

Manufacturers of U-NII devices are responsible for ensuring frequency stability such that an emission is maintained within the band of operation under all conditions of normal operation as specified in the user's manual.

3.6.2 Measuring Instruments

The measuring equipment is listed in the section 4 of this test report.

3.6.3 Test Procedures

1. To ensure emission at the band edge is maintained within the authorized band, those values shall be measured by radiation emissions at upper and lower frequency points, and finally compensated by frequency deviation as procedures below.
2. The EUT was operated at the maximum output power, and connected to the spectrum analyzer, which is set to maximum hold function and peak detector. The peak value of the power envelope was measured and noted. The upper and lower frequency points were respectively measured relatively 10dB lower than the measured peak value.
3. The frequency deviation was calculated by adding the upper frequency point and the lower frequency point divided by two. Those detailed values of frequency deviation are provided in table below.

3.6.4 Test Setup

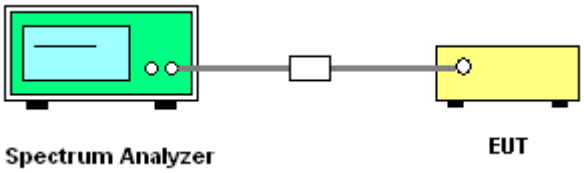

3.6.5 Test Result of Frequency Stability

Please refer to Appendix A.

3.7 Automatically Discontinue Transmission

3.7.1 Limit of Automatically Discontinue Transmission

The device shall automatically discontinue transmission in case of either absence of information to transmit or operational failure. These provisions are not intended to preclude the transmission of control or signaling information or the use of repetitive codes used by certain digital technologies to complete frame or burst intervals. Applicants shall include in their application for equipment authorization to describe how this requirement is met.

3.7.2 Measuring Instruments

The measuring equipment is listed in the section 4 of this test report.

3.7.3 Test Result of Automatically Discontinue Transmission

While the EUT is not transmitting any information, the EUT can automatically discontinue transmission and become standby mode for power saving. The EUT can detect the controlling signal of ACK message transmitting from remote device and verify whether it shall resend or discontinue transmission.

3.8 Antenna Requirements

3.8.1 Standard Applicable

According to FCC 47 CFR Section 15.407(a)(1)(2) ,if transmitting antenna directional gain is greater than 6 dBi, both the peak transmit power and the peak power spectral density shall be reduced by the amount in dB that the directional gain of the antenna exceeds 6 dBi.

3.8.2 Antenna Anti-Replacement Construction

An embedded-in antenna design is used.

3.8.3 Antenna Gain

The antenna gain is less than 6 dBi. Therefore, it is not necessary to reduce maximum peak output power limit.

4 List of Measuring Equipments

Instrument	Manufacturer	Model No.	Serial No.	Characteristics	Calibration Date	Test Date	Due Date	Remark
Power Meter	Anritsu	ML2495A	1036004	300MHz~40GHz	Aug. 09, 2014	May 10, 2015~ Jun. 15, 2015	Aug. 08, 2015	Conducted (TH02-HY)
Power Sensor	Anritsu	MA2411B	1027253	300MHz~40GHz	Aug. 11, 2014	May 10, 2015~ Jun. 15, 2015	Aug. 10, 2015	Conducted (TH02-HY)
Thermal Chamber	Ten Billion	TTH-D3SP	TBN-930701	N/A	Jul. 16, 2014	May 10, 2015~ Jun. 15, 2015	Jul. 15, 2015	Conducted (TH02-HY)
EMI Test Receiver	Rohde & Schwarz	ESCI 7	100724	9kHz~7GHz	Aug. 30, 2014	May 10, 2015~ Jun. 15, 2015	Aug. 29, 2015	Conducted (TH02-HY)
Bilog Antenna	Schaffner	CBL6111C	2726	30MHz ~ 1GHz	Sep. 27, 2014	Jun. 05, 2015~ Jun. 13, 2015	Sep. 26, 2015	Radiation (03CH07-HY)
Double Ridge Horn Antenna	ESCO	3117	00075962	1GHz ~ 18GHz	Aug. 19, 2014	Jun. 05, 2015~ Jun. 13, 2015	Aug. 18, 2015	Radiation (03CH07-HY)
EMI Test Receiver	Rohde & Schwarz	ESCI 7	100724	9kHz~7GHz	Aug. 30, 2014	Jun. 05, 2015~ Jun. 13, 2015	Aug. 29, 2015	Radiation (03CH07-HY)
Horn Antenna	SCHWARZBECK	BBHA 9120D	9120D-1328	1GHz ~ 18GHz	Nov. 05, 2014	Jun. 05, 2015~ Jun. 13, 2015	Nov. 04, 2015	Radiation (03CH07-HY)
Horn Antenna	SCHWARZBECK	BBHA 9170	BBHA9170584	18GHz- 40GHz	Nov. 03, 2014	Jun. 05, 2015~ Jun. 13, 2015	Nov. 02, 2015	Radiation (03CH07-HY)
Preamplifier	MITEQ	AMF-7D-00101800-30-10P	1590075	1GHz ~ 18GHz	Apr. 20, 2015	Jun. 05, 2015~ Jun. 13, 2015	Apr. 19, 2016	Radiation (03CH07-HY)
Preamplifier	COM-POWER	PA-103A	161241	10MHz-1000MHz	Mar. 12, 2015	Jun. 05, 2015~ Jun. 13, 2015	Mar. 11, 2016	Radiation (03CH07-HY)
Preamplifier	Agilent	8449B	3008A02362	1GHz~ 26.5GHz	Oct. 21, 2014	Jun. 05, 2015~ Jun. 13, 2015	Oct. 20, 2015	Radiation (03CH07-HY)
Signal Analyzer	Rohde & Schwarz	FSV 30	101749	10Hz~30GHz	Mar. 10, 2015	Jun. 05, 2015~ Jun. 13, 2015	Mar. 09, 2016	Radiation (03CH07-HY)
Antenna Mast	Max-Full	MFA520BS	N/A	1m~4m	N/A	Jun. 05, 2015~ Jun. 13, 2015	N/A	Radiation (03CH07-HY)
Turn Table	ChainTek	Chaintek 3000	N/A	0~360 degree	N/A	Jun. 05, 2015~ Jun. 13, 2015	N/A	Radiation (03CH07-HY)
Preamplifier	MITEQ	JS44-18004000-33-8P	1840917	18GHz ~ 40GHz	Jun. 02, 2015	Jun. 05, 2015~ Jun. 13, 2015	Jun. 01, 2016	Radiation (03CH07-HY)
Signal Analyzer	Rohde & Schwarz	FSV40	101397	10Hz~40GHz	Sep. 17, 2014	Jun. 05, 2015~ Jun. 13, 2015	Sep. 16, 2015	Radiation (03CH07-HY)
Loop Antenna	Rohde & Schwarz	HFH2-Z2	100315	9 kHz~30 MHz	Jul. 28, 2014	Jun. 05, 2015~ Jun. 13, 2015	Jul. 27, 2015	Radiation (03CH07-HY)
EMI Test Receiver	Rohde & Schwarz	ESCS 30	100356	9kHz – 2.75GHz	Dec. 01, 2014	May 16, 2015~ Jun. 09, 2015	Nov. 30, 2015	Conduction (CO05-HY)
LISN	Rohde & Schwarz	ENV216	100080	9kHz~30MHz	Dec. 02, 2014	May 16, 2015~ Jun. 09, 2015	Dec. 01, 2015	Conduction (CO05-HY)
AC Power Source	ChainTek	APC-1000W	N/A	N/A	N/A	May 16, 2015~ Jun. 09, 2015	N/A	Conduction (CO05-HY)

5 Uncertainty of Evaluation

Uncertainty of Conducted Emission Measurement (150kHz ~ 30MHz)

Measuring Uncertainty for a Level of Confidence of 95% (U = 2Uc(y))	2.26

Uncertainty of Radiated Emission Measurement (30 MHz ~ 1000 MHz)

Measuring Uncertainty for a Level of Confidence of 95% (U = 2Uc(y))	5.2

Appendix A. Conducted Test Results

Report Number : FR550147E

Test Engineer:	Derek Hsu	Temperature:	21~25	°C
Test Date:	2015/5/10~2015/06/15	Relative Humidity:	51~54	%

Report Number : FR550147E

TEST RESULTS DATA
26dB and 99% OBW

Band I										
Mod.	Data Rate	N_{TX}	CH.	Freq. (MHz)	99% Bandwidth (MHz)	26 dB Bandwidth (MHz)	IC 99% Bandwidth Power Limit (dBm)	IC 99% Bandwidth EIRP Limit (dBm)		
11a	6Mbps	1	36	5180	21.60	41.30	-	23.01		
11a	6Mbps	1	44	5220	22.60	43.00	-	23.01		
11a	6Mbps	1	48	5240	23.25	43.00	-	23.01		
HT20	MCS0	1	36	5180	20.45	41.55	-	23.01		
HT20	MCS0	1	44	5220	20.25	39.00	-	23.01		
HT20	MCS0	1	48	5240	20.35	42.20	-	23.01		
HT40	MCS0	1	38	5190	36.50	45.00	-	23.01		
HT40	MCS0	1	46	5230	37.10	65.34	-	23.01		

Report Number : FR550147E

TEST RESULTS DATA
Average Power Table

FCC Band I										
Mod.	Data Rate	NTX	CH.	Freq. (MHz)	Duty Factor (dB)	Average Conducted Power (dBm)	FCC Conducted Power Limit (dBm)	DG (dBi)		Pass/Fail
11a	6Mbps	1	36	5180	0.56	16.58	24.00	-1.10		Pass
11a	6Mbps	1	44	5220	0.56	17.42	24.00	-1.10		Pass
11a	6Mbps	1	48	5240	0.56	17.18	24.00	-1.10		Pass
HT20	MCS0	1	36	5180	0.63	15.96	24.00	-1.10		Pass
HT20	MCS0	1	44	5220	0.63	15.87	24.00	-1.10		Pass
HT20	MCS0	1	48	5240	0.63	15.84	24.00	-1.10		Pass
HT40	MCS0	1	38	5190	1.49	13.13	24.00	-1.10		Pass
HT40	MCS0	1	46	5230	1.49	15.06	24.00	-1.10		Pass

Report Number : FR550147E

TEST RESULTS DATA
Power Spectral Density

FCC Band I										
Mod.	Data Rate	N_{TX}	CH.	Freq. (MHz)	Duty Factor (dB)	Average Power Density (dBm/MHz)	Average PSD Limit (dBm/MHz)	DG (dBi)	-	Pass/Fail
11a	6Mbps	1	36	5180	0.56	5.43	11.00	-1.10		Pass
11a	6Mbps	1	44	5220	0.56	5.49	11.00	-1.10		Pass
11a	6Mbps	1	48	5240	0.56	5.53	11.00	-1.10		Pass
HT20	MCS0	1	36	5180	0.63	4.34	11.00	-1.10		Pass
HT20	MCS0	1	44	5220	0.63	4.58	11.00	-1.10		Pass
HT20	MCS0	1	48	5240	0.63	4.34	11.00	-1.10		Pass
HT40	MCS0	1	38	5190	1.49	-1.18	11.00	-1.10		Pass
HT40	MCS0	1	46	5230	1.49	1.60	11.00	-1.10		Pass

TEST RESULTS DATA
26dB and 99% OBW

Band II										
Mod.	Data Rate	NTX	CH.	Freq. (MHz)	99% Bandwidth (MHz)	26 dB Bandwidth (MHz)	IC 99% Bandwidth Power Limit (dBm)	IC 99% Bandwidth EIRP Limit (dBm)	FCC 26dB Bandwidth Power Limit (dBm)	Note
11a	6M bps	1	52	5260	23.55	42.05	23.98	30.00	23.98	
11a	6M bps	1	60	5300	23.35	42.55	23.98	30.00	23.98	
11a	6M bps	1	64	5320	19	36.3	23.79	29.79	23.98	
HT20	MCS 0	1	52	5260	20.3	41.05	23.98	30.00	23.98	
HT20	MCS 0	1	60	5300	20.5	43.1	23.98	30.00	23.98	
HT20	MCS 0	1	64	5320	19.5	39.9	23.90	29.90	23.98	
HT40	MCS 0	1	54	5270	36.8	53.19	23.98	30.00	23.98	
HT40	MCS 0	1	62	5310	36.7	45.36	23.98	30.00	23.98	

Report Number : FR550147E

TEST RESULTS DATA
Average Power Table

FCC Band II										
Mod.	Data Rate	N_{TX}	CH.	Freq. (MHz)	Duty Factor (dB)	Average Conducted Power (dBm)	FCC Conducted Power Limit (dBm)	DG (dBi)		Pass/Fail
11a	6M bps	1	52	5260	0.56	17.26	23.98	-0.50		Pass
11a	6M bps	1	60	5300	0.56	17.33	23.98	-0.50		Pass
11a	6M bps	1	64	5320	0.56	15.29	23.98	-0.50		Pass
HT20	MCS 0	1	52	5260	0.63	15.99	23.98	-0.50		Pass
HT20	MCS 0	1	60	5300	0.63	16.03	23.98	-0.50		Pass
HT20	MCS 0	1	64	5320	0.63	15.21	23.98	-0.50		Pass
HT40	MCS 0	1	54	5270	1.49	14.93	23.98	-0.50		Pass
HT40	MCS 0	1	62	5310	1.49	11.83	23.98	-0.50		Pass

Report Number : FR550147E

TEST RESULTS DATA
Power Spectral Density

Band II										
Mod.	Data Rate	NTX	CH.	Freq. (MHz)	Duty Factor (dB)	Average Power Density (dBm/MHz)	Average PSD Limit (dBm/MHz)	DG (dBi)		Pass/Fail
11a	6M bps	1	52	5260	0.56	5.61	11.00	-0.50		Pass
11a	6M bps	1	60	5300	0.56	5.80	11.00	-0.50		Pass
11a	6M bps	1	64	5320	0.56	4.24	11.00	-0.50		Pass
HT20	MCS 0	1	52	5260	0.63	4.45	11.00	-0.50		Pass
HT20	MCS 0	1	60	5300	0.63	4.72	11.00	-0.50		Pass
HT20	MCS 0	1	64	5320	0.63	3.99	11.00	-0.50		Pass
HT40	MCS 0	1	54	5270	1.49	0.71	11.00	-0.50		Pass
HT40	MCS 0	1	62	5310	1.49	-1.60	11.00	-0.50		Pass

Report Number : FR550147E

TEST RESULTS DATA
26dB and 99% OBW

Band III										
Mod.	Data Rate	NTX	CH.	Freq. (MHz)	99% Bandwidth (MHz)	26 dB Bandwidth (MHz)	IC 99% Bandwidth Power Limit (dBm)	IC 99% Bandwidth EIRP Limit (dBm)	FCC 26dB Bandwidth Power Limit (dBm)	Note
11a	6M bps	1	100	5500	20.95	39.25	23.98	30.00	23.98	
11a	6M bps	1	116	5580	24.85	43.1	23.98	30.00	23.98	
11a	6M bps	1	140	5700	18.6	33.25	23.70	29.70	23.98	
HT20	MCS 0	1	100	5500	20.4	38.95	23.98	30.00	23.98	
HT20	MCS 0	1	116	5580	20.45	41.35	23.98	30.00	23.98	
HT20	MCS 0	1	140	5700	19.25	28.65	23.84	29.84	23.98	
HT40	MCS 0	1	102	5510	36.6	44.64	23.98	30.00	23.98	
HT40	MCS 0	1	110	5550	36.8	51.21	23.98	30.00	23.98	
HT40	MCS 0	1	134	5670	36.8	56.43	23.98	30.00	23.98	

Report Number : FR550147E

TEST RESULTS DATA
Average Power Table

FCC Band III										
Mod.	Data Rate	N_{TX}	CH.	Freq. (MHz)	Duty Factor (dB)	Average Conducted Power (dBm)	FCC Conducted Power Limit (dBm)	DG (dBi)		Pass/Fail
11a	6M bps	1	100	5500	0.56	16.85	23.98	-0.20		Pass
11a	6M bps	1	116	5580	0.56	17.48	23.98	-0.20		Pass
11a	6M bps	1	140	5700	0.56	14.71	23.98	-0.20		Pass
HT20	MCS 0	1	100	5500	0.63	16.29	23.98	-0.20		Pass
HT20	MCS 0	1	116	5580	0.63	16.18	23.98	-0.20		Pass
HT20	MCS 0	1	140	5700	0.63	13.81	23.98	-0.20		Pass
HT40	MCS 0	1	102	5510	1.49	13.08	23.98	-0.20		Pass
HT40	MCS 0	1	110	5550	1.49	15.06	23.98	-0.20		Pass
HT40	MCS 0	1	134	5670	1.49	14.80	23.98	-0.20		Pass

Report Number : FR550147E

TEST RESULTS DATA
Power Spectral Density

Band III										
Mod.	Data Rate	NTX	CH.	Freq. (MHz)	Duty Factor (dB)	Average Power Density (dBm/MHz)	Average PSD Limit (dBm/MHz)	DG (dBi)		Pass/Fail
11a	6M bps	1	100	5500	0.56	5.77	11.00	-0.20		Pass
11a	6M bps	1	116	5580	0.56	6.48	11.00	-0.20		Pass
11a	6M bps	1	140	5700	0.56	3.85	11.00	-0.20		Pass
HT20	MCS 0	1	100	5500	0.63	4.98	11.00	-0.20		Pass
HT20	MCS 0	1	116	5580	0.63	5.27	11.00	-0.20		Pass
HT20	MCS 0	1	140	5700	0.63	3.28	11.00	-0.20		Pass
HT40	MCS 0	1	102	5510	1.49	-0.77	11.00	-0.20		Pass
HT40	MCS 0	1	110	5550	1.49	1.24	11.00	-0.20		Pass
HT40	MCS 0	1	134	5670	1.49	0.53	11.00	-0.20		Pass

Report Number : FR550147E

TEST RESULTS DATA
Frequency Stability

Band I										
Mod.	Data Rate	NTX	CH.	Freq. (MHz)	Center Frequency (MHz)	Frequency Deviation (MHz)	Frequency Stablility (ppm)	Temperature (°C)	Voltage (V)	Note
11a	6Mbps	1	36	5180	5179.950	-0.050	-9.65	20	3.5	
11a	6Mbps	1	36	5180	5179.950	-0.050	-9.65	20	4.35	
11a	6Mbps	1	36	5180	5179.950	-0.050	-9.65	20	3.9	
11a	6Mbps	1	36	5180	5180.000	0.000	0.00	-30	3.9	
11a	6Mbps	1	36	5180	5179.950	-0.050	-9.65	60	3.9	

Band II										
Mod.	Data Rate	NTX	CH.	Freq. (MHz)	Center Frequency (MHz)	Frequency Deviation (MHz)	Frequency Stablility (ppm)	Temperature (°C)	Voltage (V)	Note
11a	6Mbps	1	64	5320	5319.950	-0.050	-9.40	20	3.5	
11a	6Mbps	1	64	5320	5319.975	-0.025	-4.70	20	4.35	
11a	6Mbps	1	64	5320	5319.950	-0.050	-9.40	20	3.9	
11a	6Mbps	1	64	5320	5320.000	0.000	0.00	-30	3.9	
11a	6Mbps	1	64	5320	5319.950	-0.050	-9.40	60	3.9	

Band III										
Mod.	Data Rate	NTX	CH.	Freq. (MHz)	Center Frequency (MHz)	Frequency Deviation (MHz)	Frequency Stablility (ppm)	Temperature (°C)	Voltage (V)	Note
11a	6Mbps	1	100	5500	5499.950	-0.050	-9.09	20	3.5	
11a	6Mbps	1	100	5500	5499.950	-0.050	-9.09	20	4.35	
11a	6Mbps	1	100	5500	5499.950	-0.050	-9.09	20	3.9	
11a	6Mbps	1	100	5500	5500.000	0.000	0.00	-30	3.9	
11a	6Mbps	1	100	5500	5499.900	-0.100	-18.18	60	3.9	

Appendix B. Radiated Spurious Emission

Test Engineer :	Luke Chang, Nick Yu, Ken Wu, and James Chiu	Temperature :	21~23°C
		Relative Humidity :	60~63%

15E Band 1 5150~5250MHz

WIFI 802.11a (Band Edge @ 3m) (Standalone)

WIFI Ant. 1	Note	Frequency (MHz)	Level (dBμV/m)	Over Limit (dB)	Limit Line (dBμV/m)	Read Level (dBμV)	Antenna Factor (dB/m)	Cable Loss (dB)	Preamp Factor (dB)	Ant Pos (cm)	Table Pos (deg)	Peak Avg. (P/A)	Pol. (H/V)
802.11a CH 36 5180MHz		5149.55	73.06	-0.94	74	59.39	34.61	11.55	32.49	232	358	P	H
		5150	51.9	-2.1	54	38.23	34.61	11.55	32.49	232	358	A	H
	*	5180	109.99	-	-	96.3	34.66	11.55	32.52	232	358	P	H
	*	5180	100.31	-	-	86.62	34.66	11.55	32.52	232	358	A	H
													H
													H
		5149.1	67.52	-6.48	74	53.85	34.61	11.55	32.49	100	275	P	V
		5150	47.89	-6.11	54	34.22	34.61	11.55	32.49	100	275	A	V
	*	5180	103.66	-	-	89.97	34.66	11.55	32.52	100	275	P	V
	*	5180	93.62	-	-	79.93	34.66	11.55	32.52	100	275	A	V
													V
													V
802.11a CH 44 5220MHz		5148.5	57.64	-16.36	74	43.97	34.61	11.55	32.49	245	360	P	H
		5150	44.1	-9.9	54	30.43	34.61	11.55	32.49	245	360	A	H
	*	5220	111.44	-	-	97.7	34.7	11.59	32.55	245	360	P	H
	*	5220	101.79	-	-	88.05	34.7	11.59	32.55	245	360	A	H
		5438.66	57.03	-16.97	74	43.7	35.01	11.8	33.48	245	360	P	H
		5367.16	44.35	-9.65	54	30.91	34.91	11.71	33.18	245	360	A	H
		5093.6	57.97	-16.03	74	44.39	34.54	11.46	32.42	100	296	P	V
		5143.55	43.91	-10.09	54	30.2	34.61	11.55	32.45	100	296	A	V
	*	5220	104.33	-	-	90.59	34.7	11.59	32.55	100	296	P	V
	*	5220	94.58	-	-	80.84	34.7	11.59	32.55	100	296	A	V
		5390.81	58.5	-15.5	74	45.1	34.94	11.74	33.28	100	296	P	V
		5391.8	44.21	-9.79	54	30.81	34.94	11.74	33.28	100	296	A	V

802.11a CH 48 5240MHz		5035.4	57.25	-16.75	74	43.71	34.45	11.41	32.32	208	360	P	H
		5147.15	44.21	-9.79	54	30.54	34.61	11.55	32.49	208	360	A	H
	*	5239	111.73	-	-	98.03	34.73	11.62	32.65	208	360	P	H
	*	5239	101.82	-	-	88.12	34.73	11.62	32.65	208	360	A	H
		5407.53	58.06	-15.94	74	44.75	34.96	11.74	33.39	208	360	P	H
		5371.67	44.23	-9.77	54	30.79	34.91	11.71	33.18	208	360	A	H
		5138.9	57.87	-16.13	74	44.23	34.59	11.5	32.45	100	289	P	V
		5136.05	43.95	-10.05	54	30.31	34.59	11.5	32.45	100	289	A	V
	*	5240	104.96	-	-	91.26	34.73	11.62	32.65	100	289	P	V
	*	5240	95.97	-	-	82.27	34.73	11.62	32.65	100	289	A	V
		5412.92	57.28	-16.72	74	43.95	34.98	11.74	33.39	100	289	P	V
		5401.59	44.3	-9.7	54	30.99	34.96	11.74	33.39	100	289	A	V
Remark	1. No other spurious found. 2. All results are PASS against Peak and Average limit line.												

15E Band 1 5150~5250MHz

WIFI 802.11a (Harmonic @ 3m) (Standalone)

WIFI Ant.	Note	Frequency (MHz)	Level (dBμV/m)	Over Limit (dB)	Limit Line (dBμV/m)	Read Level (dBμV)	Antenna Factor (dB/m)	Cable Loss (dB)	Preamp Factor (dB)	Ant Pos (cm)	Table Pos (deg)	Peak Avg. (P/A)	Pol. (H/V)
802.11a CH 36 5180MHz		10360	42.45	-31.55	74	48.8	37.22	16.34	59.91	100	0	P	H
		15540	47.61	-26.39	74	44.79	40.34	20.36	57.88	100	0	P	H
													H
													H
		10360	42.59	-31.41	74	48.94	37.22	16.34	59.91	100	0	P	V
		15540	47.73	-26.27	74	44.91	40.34	20.36	57.88	100	0	P	V
													V
													V
802.11a CH 44 5220MHz		10440	42.22	-31.78	74	48.4	37.26	16.41	59.85	100	0	P	H
		15660	46.44	-27.56	74	43.35	40.49	20.41	57.81	100	0	P	H
													H
													H
		10440	41.83	-32.17	74	48.01	37.26	16.41	59.85	100	0	P	V
		15660	46.71	-27.29	74	43.62	40.49	20.41	57.81	100	0	P	V
													V
													V
802.11a CH 48 5240MHz		10480	42.33	-31.67	74	48.4	37.29	16.45	59.81	100	0	P	H
		15720	48.36	-25.64	74	45.11	40.57	20.45	57.77	100	0	P	H
													H
													H
		10480	42.42	-31.58	74	48.49	37.29	16.45	59.81	100	0	P	V
		15720	48.24	-25.76	74	44.99	40.57	20.45	57.77	100	0	P	V
													V
													V
Remark	1. No other spurious found. 2. All results are PASS against Peak and Average limit line.												

15E Band 1 5150~5250MHz

WIFI 802.11n HT20 (Band Edge @ 3m) (Standalone)

WIFI Ant.	Note	Frequency (MHz)	Level (dBμV/m)	Over Limit (dB)	Limit Line (dBμV/m)	Read Level (dBμV)	Antenna Factor (dB/m)	Cable Loss (dB)	Preamp Factor (dB)	Ant Pos (cm)	Table Pos (deg)	Peak Avg. (P/A)	Pol. (H/V)
802.11n HT20 CH 36 5180MHz		5146.85	72.7	-1.3	74	59.03	34.61	11.55	32.49	184	360	P	H
		5150	51.54	-2.46	54	37.87	34.61	11.55	32.49	184	360	A	H
	*	5180	108.65	-	-	94.96	34.66	11.55	32.52	184	360	P	H
	*	5180	99.24	-	-	85.55	34.66	11.55	32.52	184	360	A	H
													H
													H
		5146.85	65.03	-8.97	74	51.36	34.61	11.55	32.49	200	88	P	V
		5149.85	46.7	-7.3	54	33.03	34.61	11.55	32.49	200	88	A	V
	*	5182	103.52	-	-	89.79	34.66	11.59	32.52	200	88	P	V
	*	5182	93.36	-	-	79.63	34.66	11.59	32.52	200	88	A	V
													V
													V
802.11n HT20 CH 44 5220MHz		5029.7	57.48	-16.52	74	43.94	34.45	11.41	32.32	244	360	P	H
		5146.25	44.21	-9.79	54	30.54	34.61	11.55	32.49	244	360	A	H
	*	5220	109.48	-	-	95.74	34.7	11.59	32.55	244	360	P	H
	*	5220	99.86	-	-	86.12	34.7	11.59	32.55	244	360	A	H
		5413.69	57.4	-16.6	74	44.07	34.98	11.74	33.39	244	360	P	H
		5409.51	44.37	-9.63	54	31.06	34.96	11.74	33.39	244	360	A	H
		5101.4	57.68	-16.32	74	44.06	34.54	11.5	32.42	100	289	P	V
		5132	43.94	-10.06	54	30.3	34.59	11.5	32.45	100	289	A	V
	*	5221	103.91	-	-	90.24	34.7	11.62	32.65	100	289	P	V
	*	5221	94.18	-	-	80.51	34.7	11.62	32.65	100	289	A	V
		5423.15	57.86	-16.14	74	44.47	34.98	11.8	33.39	100	289	P	V
		5406.1	44.21	-9.79	54	30.9	34.96	11.74	33.39	100	289	A	V

802.11n HT20 CH 48 5240MHz		5105.15	57.47	-16.53	74	43.85	34.54	11.5	32.42	246	360	P	H
		5141.3	43.99	-10.01	54	30.28	34.61	11.55	32.45	246	360	A	H
	*	5240	109.82	-	-	96.12	34.73	11.62	32.65	246	360	P	H
	*	5240	100.37	-	-	86.67	34.73	11.62	32.65	246	360	A	H
		5411.49	58.59	-15.41	74	45.28	34.96	11.74	33.39	246	360	P	H
		5391.36	44.34	-9.66	54	30.94	34.94	11.74	33.28	246	360	A	H
		5002.4	57.39	-16.61	74	43.91	34.4	11.37	32.29	100	289	P	V
		5135.15	43.87	-10.13	54	30.23	34.59	11.5	32.45	100	289	A	V
	*	5240	103.23	-	-	89.53	34.73	11.62	32.65	100	289	P	V
	*	5240	93.85	-	-	80.15	34.73	11.62	32.65	100	289	A	V
		5423.7	57.5	-16.5	74	44.11	34.98	11.8	33.39	100	289	P	V
		5394.77	44.32	-9.68	54	30.9	34.96	11.74	33.28	100	289	A	V
Remark	1. No other spurious found. 2. All results are PASS against Peak and Average limit line.												

15E Band 1 5150~5250MHz

WIFI 802.11n HT20 (Harmonic @ 3m) (Standalone)

WIFI Ant. 1	Note	Frequency (MHz)	Level (dBμV/m)	Over Limit (dB)	Limit Line (dBμV/m)	Read Level (dBμV)	Antenna Factor (dB/m)	Cable Loss (dB)	Preamp Factor (dB)	Ant Pos (cm)	Table Pos (deg)	Peak Avg. (P/A)	Pol. (H/V)
802.11n HT20 CH 36 5180MHz		10360	42.25	-31.75	74	48.6	37.22	16.34	59.91	100	0	P	H
		15540	48.06	-25.94	74	45.24	40.34	20.36	57.88	100	0	P	H
													H
													H
		10360	41.97	-32.03	74	48.32	37.22	16.34	59.91	100	0	P	V
		15540	48.48	-25.52	74	45.66	40.34	20.36	57.88	100	0	P	V
													V
													V
802.11n HT20 CH 44 5220MHz		10440	41.51	-32.49	74	47.69	37.26	16.41	59.85	100	0	P	H
		15660	47.04	-26.96	74	43.95	40.49	20.41	57.81	100	0	P	H
													H
													H
		10440	42.08	-31.92	74	48.26	37.26	16.41	59.85	100	0	P	V
		15660	47.53	-26.47	74	44.44	40.49	20.41	57.81	100	0	P	V
													V
													V
802.11n HT20 CH 48 5240MHz		10480	42.96	-31.04	74	49.03	37.29	16.45	59.81	100	0	P	H
		15720	48.03	-25.97	74	44.78	40.57	20.45	57.77	100	0	P	H
													H
													H
		10480	42.38	-31.62	74	48.45	37.29	16.45	59.81	100	0	P	V
		15720	48.48	-25.52	74	45.23	40.57	20.45	57.77	100	0	P	V
													V
													V
Remark	1. No other spurious found. 2. All results are PASS against Peak and Average limit line.												

15E Band 1 5150~5250MHz

WIFI 802.11n HT40 (Band Edge @ 3m) (Standalone)

WIFI Ant.	Note	Frequency	Level	Over Limit	Limit Line	Read Level	Antenna Factor	Cable Loss	Preamp Factor	Ant Pos	Table Pos	Peak Avg.	Pol.
1		(MHz)	(dBμV/m)	(dB)	(dBμV/m)	(dBμV)	(dB/m)	(dB)	(dB)	(cm)	(deg)	(P/A)	(H/V)
802.11n HT40 CH 38 5190MHz		5148.8	70.75	-3.25	74	57.08	34.61	11.55	32.49	196	360	P	H
		5149.55	53.33	-0.67	54	39.66	34.61	11.55	32.49	196	360	P	H
	*	5190	103.24	-	-	89.51	34.66	11.59	32.52	196	360	P	H
	*	5190	93.04	-	-	79.31	34.66	11.59	32.52	196	360	A	H
		5415.78	57.34	-16.66	74	44.01	34.98	11.74	33.39	196	360	P	H
		5383.88	45.18	-8.82	54	31.78	34.94	11.74	33.28	196	360	A	H
		5148.65	63.05	-10.95	74	49.38	34.61	11.55	32.49	184	85	P	V
		5150	47.5	-6.5	54	33.83	34.61	11.55	32.49	184	85	A	V
	*	5190	95.6	-	-	81.87	34.66	11.59	32.52	184	85	P	V
	*	5190	86.7	-	-	72.97	34.66	11.59	32.52	184	85	A	V
		5427.11	58.06	-15.94	74	44.76	34.98	11.8	33.48	184	85	P	V
		5392.79	45.06	-8.94	54	31.66	34.94	11.74	33.28	184	85	A	V
802.11n HT40 CH 46 5230MHz		5146.25	57.78	-16.22	74	44.11	34.61	11.55	32.49	226	329	P	H
		5144.45	45.24	-8.76	54	31.57	34.61	11.55	32.49	226	329	A	H
	*	5232	104.71	-	-	91.01	34.73	11.62	32.65	226	329	P	H
	*	5232	95.2	-	-	81.5	34.73	11.62	32.65	226	329	A	H
		5423.04	57.09	-16.91	74	43.7	34.98	11.8	33.39	226	329	P	H
		5385.42	44.97	-9.03	54	31.57	34.94	11.74	33.28	226	329	A	H
		5130.5	57.08	-16.92	74	43.44	34.59	11.5	32.45	100	292	P	V
		5149.25	44.63	-9.37	54	30.96	34.61	11.55	32.49	100	292	A	V
	*	5228	99.85	-	-	86.15	34.73	11.62	32.65	100	292	P	V
	*	5228	90.43	-	-	76.73	34.73	11.62	32.65	100	292	A	V
		5428.87	57.36	-16.64	74	44.03	35.01	11.8	33.48	100	292	P	V
		5396.75	44.97	-9.03	54	31.55	34.96	11.74	33.28	100	292	A	V
Remark	1. No other spurious found. 2. All results are PASS against Peak and Average limit line.												

15E Band 1 5150~5250MHz

WIFI 802.11n HT40 (Harmonic @ 3m) (Standalone)

WIFI Ant.	Note	Frequency (MHz)	Level (dBμV/m)	Over Limit (dB)	Limit Line (dBμV/m)	Read Level (dBμV)	Antenna Factor (dB/m)	Cable Loss (dB)	Preamp Factor (dB)	Ant Pos (cm)	Table Pos (deg)	Peak Avg. (P/A)	Pol. (H/V)
802.11n HT40 CH 38 5190MHz		10380	42.4	-31.6	74	48.72	37.23	16.34	59.89	100	0	P	H
		15570	47.92	-26.08	74	45.02	40.38	20.38	57.86	100	0	P	H
													H
													H
		10380	42.87	-31.13	74	49.19	37.23	16.34	59.89	100	0	P	V
		15570	47.82	-26.18	74	44.92	40.38	20.38	57.86	100	0	P	V
													V
													V
802.11n HT40 CH 46 5230MHz		10460	42.13	-31.87	74	48.29	37.27	16.41	59.84	100	0	P	H
		15690	47.82	-26.18	74	44.65	40.53	20.43	57.79	100	0	P	H
													H
													H
		10460	41.9	-32.1	74	48.06	37.27	16.41	59.84	100	0	P	V
		15690	48.51	-25.49	74	45.34	40.53	20.43	57.79	100	0	P	V
													V
													V
Remark	1. No other spurious found. 2. All results are PASS against Peak and Average limit line.												

15E Band 2 5250~5350MHz

WIFI 802.11a (Band Edge @ 3m) (Standalone)

WIFI Ant.	Note	Frequency (MHz)	Level (dBμV/m)	Over Limit (dB)	Limit Line (dBμV/m)	Read Level (dBμV)	Antenna Factor (dB/m)	Cable Loss (dB)	Preamp Factor (dB)	Ant Pos (cm)	Table Pos (deg)	Peak Avg. (P/A)	Pol. (H/V)
802.11a CH 52 5260MHz		5087.6	57.49	-16.51	74	43.9	34.52	11.46	32.39	231	360	P	H
		5133.05	43.98	-10.02	54	30.34	34.59	11.5	32.45	231	360	A	H
	*	5260	112.35	-	-	98.72	34.77	11.62	32.76	231	360	P	H
	*	5260	102.59	-	-	88.96	34.77	11.62	32.76	231	360	A	H
		5403.24	57.49	-16.51	74	44.18	34.96	11.74	33.39	231	360	P	H
		5410.5	44.36	-9.64	54	31.05	34.96	11.74	33.39	231	360	A	H
		5136.2	57.55	-16.45	74	43.91	34.59	11.5	32.45	100	278	P	V
		5149.1	43.99	-10.01	54	30.32	34.61	11.55	32.49	100	278	A	V
	*	5260	105.91	-	-	92.28	34.77	11.62	32.76	100	278	P	V
	*	5260	95.77	-	-	82.14	34.77	11.62	32.76	100	278	A	V
		5361.99	58.11	-15.89	74	44.67	34.91	11.71	33.18	100	278	P	V
		5378.6	44.26	-9.74	54	30.89	34.94	11.71	33.28	100	278	A	V
802.11a CH 60 5300MHz		5108.9	56.97	-17.03	74	43.33	34.56	11.5	32.42	227	360	P	H
		5148.35	44.17	-9.83	54	30.5	34.61	11.55	32.49	227	360	A	H
	*	5300	112.65	-	-	99.15	34.82	11.65	32.97	227	360	P	H
	*	5300	102.7	-	-	89.2	34.82	11.65	32.97	227	360	A	H
		5350	61.05	-12.95	74	47.63	34.89	11.71	33.18	227	360	P	H
		5352.2	48.82	-5.18	54	35.4	34.89	11.71	33.18	227	360	A	H
		5116.4	57.79	-16.21	74	44.15	34.56	11.5	32.42	101	292	P	V
		5144.15	43.85	-10.15	54	30.18	34.61	11.55	32.49	101	292	A	V
	*	5300	105.46	-	-	91.96	34.82	11.65	32.97	101	292	P	V
	*	5300	95.37	-	-	81.87	34.82	11.65	32.97	101	292	A	V
		5352.09	58.21	-15.79	74	44.79	34.89	11.71	33.18	101	292	P	V
		5352.31	45.06	-8.94	54	31.64	34.89	11.71	33.18	101	292	A	V

802.11a CH 64 5320MHz	*	5320	109.37	-	-	95.82	34.84	11.68	32.97	224	360	P	H
	*	5320	99.76	-	-	86.21	34.84	11.68	32.97	224	360	A	H
		5350.66	70.64	-3.36	74	57.22	34.89	11.71	33.18	224	360	P	H
		5350	51.23	-2.77	54	37.81	34.89	11.71	33.18	224	360	A	H
													H
													H
	*	5320	102.94	-	-	89.39	34.84	11.68	32.97	172	2	P	V
	*	5320	93.44	-	-	79.89	34.84	11.68	32.97	172	2	A	V
		5352.42	66.6	-7.4	74	53.18	34.89	11.71	33.18	172	2	P	V
		5350.22	46.76	-7.24	54	33.34	34.89	11.71	33.18	172	2	A	V
													V
													V
Remark	1. No other spurious found. 2. All results are PASS against Peak and Average limit line.												

15E Band 2 5250~5350MHz

WIFI 802.11a (Harmonic @ 3m) (Standalone)

WIFI Ant.	Note	Frequency	Level	Over Limit	Limit Line	Read Level	Antenna Factor	Cable Loss	Preamp Factor	Ant Pos	Table Pos	Peak Avg.	Pol.
1		(MHz)	(dBμV/m)	(dB)	(dBμV/m)	(dBμV)	(dB/m)	(dB)	(dB)	(cm)	(deg)	(P/A)	(H/V)
802.11a CH 52 5260MHz		10520	42.59	-31.41	74	48.56	37.32	16.49	59.78	100	0	P	H
		15780	48.5	-25.5	74	45.14	40.63	20.46	57.73	100	0	P	H
													H
													H
		10520	44.28	-29.72	74	50.25	37.32	16.49	59.78	100	0	P	V
		15780	48.31	-25.69	74	44.95	40.63	20.46	57.73	100	0	P	V
													V
													V
802.11a CH 60 5300MHz		10600	42.16	-31.84	74	47.84	37.42	16.56	59.66	100	0	P	H
		15900	47.9	-26.1	74	44.26	40.78	20.52	57.66	100	0	P	H
													H
													H
		10600	41.98	-32.02	74	47.66	37.42	16.56	59.66	100	0	P	V
		15900	48.15	-25.85	74	44.51	40.78	20.52	57.66	100	0	P	V
													V
													V
802.11a CH 64 5320MHz		10640	42.05	-31.95	74	47.59	37.47	16.6	59.61	100	0	P	H
		15960	47.39	-26.61	74	43.6	40.86	20.55	57.62	100	0	P	H
													H
													H
		10640	41.77	-32.23	74	47.31	37.47	16.6	59.61	100	0	P	V
		15960	47.43	-26.57	74	43.64	40.86	20.55	57.62	100	0	P	V
													V
													V
Remark	1. No other spurious found. 2. All results are PASS against Peak and Average limit line.												

15E Band 2 5250~5350MHz

WIFI 802.11n HT20 (Band Edge @ 3m) (Standalone)

WIFI Ant.	Note	Frequency	Level	Over Limit	Limit Line	Read Level	Antenna Factor	Cable Loss	Preamp Factor	Ant Pos	Table Pos	Peak Avg.	Pol.
1		(MHz)	(dBμV/m)	(dB)	(dBμV/m)	(dBμV)	(dB/m)	(dB)	(dB)	(cm)	(deg)	(P/A)	(H/V)
802.11n HT20 CH 52 5260MHz		5046.35	57.9	-16.1	74	44.37	34.47	11.41	32.35	218	360	P	H
		5147.75	43.92	-10.08	54	30.25	34.61	11.55	32.49	218	360	A	H
	*	5260	110.31	-	-	96.68	34.77	11.62	32.76	218	360	P	H
	*	5260	100.34	-	-	86.71	34.77	11.62	32.76	218	360	A	H
		5356.93	57.81	-16.19	74	44.39	34.89	11.71	33.18	218	360	P	H
		5402.47	44.34	-9.66	54	31.03	34.96	11.74	33.39	218	360	A	H
		5134.4	57.55	-16.45	74	43.91	34.59	11.5	32.45	100	279	P	V
		5143.25	43.88	-10.12	54	30.17	34.61	11.55	32.45	100	279	A	V
	*	5260	103.79	-	-	90.16	34.77	11.62	32.76	100	279	P	V
	*	5260	94.34	-	-	80.71	34.77	11.62	32.76	100	279	A	V
		5385.97	57.04	-16.96	74	43.64	34.94	11.74	33.28	100	279	P	V
		5420.73	44.31	-9.69	54	30.92	34.98	11.8	33.39	100	279	A	V
802.11n HT20 CH 60 5300MHz		5129.6	57.24	-16.76	74	43.6	34.59	11.5	32.45	239	360	P	H
		5142.95	44.01	-9.99	54	30.3	34.61	11.55	32.45	239	360	A	H
	*	5300	110.1	-	-	96.6	34.82	11.65	32.97	239	360	P	H
	*	5300	100.22	-	-	86.72	34.82	11.65	32.97	239	360	A	H
		5353.96	61.83	-12.17	74	48.41	34.89	11.71	33.18	239	360	P	H
		5351.54	48.66	-5.34	54	35.24	34.89	11.71	33.18	239	360	A	H
		5147.45	57.2	-16.8	74	43.53	34.61	11.55	32.49	100	296	P	V
		5145.35	43.88	-10.12	54	30.21	34.61	11.55	32.49	100	296	A	V
	*	5300	102.67	-	-	89.17	34.82	11.65	32.97	100	296	P	V
	*	5300	93.14	-	-	79.64	34.82	11.65	32.97	100	296	A	V
		5385.64	57.53	-16.47	74	44.13	34.94	11.74	33.28	100	296	P	V
		5351.98	44.98	-9.02	54	31.56	34.89	11.71	33.18	100	296	A	V

802.11n HT20 CH 64 5320MHz	*	5320	108.72	-	-	95.17	34.84	11.68	32.97	178	360	P	H
	*	5320	99	-	-	85.45	34.84	11.68	32.97	178	360	A	H
		5351.43	72.01	-1.99	74	58.59	34.89	11.71	33.18	178	360	P	H
		5350.11	51.53	-2.47	54	38.11	34.89	11.71	33.18	178	360	A	H
													H
													H
	*	5320	103.8	-	-	90.25	34.84	11.68	32.97	200	85	P	V
	*	5320	92.78	-	-	79.23	34.84	11.68	32.97	200	85	A	V
		5352.31	66.46	-7.54	74	53.04	34.89	11.71	33.18	200	85	P	V
		5350	47.75	-6.25	54	34.33	34.89	11.71	33.18	200	85	A	V
													V
													V
Remark	1. No other spurious found. 2. All results are PASS against Peak and Average limit line.												

15E Band 2 5250~5350MHz

WIFI 802.11n HT20 (Harmonic @ 3m) (Standalone)

WIFI Ant.	Note	Frequency (MHz)	Level (dBμV/m)	Over Limit (dB)	Limit Line (dBμV/m)	Read Level (dBμV)	Antenna Factor (dB/m)	Cable Loss (dB)	Preamp Factor (dB)	Ant Pos (cm)	Table Pos (deg)	Peak Avg. (P/A)	Pol. (H/V)
802.11n HT20 CH 52 5260MHz		10520	42.51	-31.49	74	48.48	37.32	16.49	59.78	100	0	P	H
		15780	48.34	-25.66	74	44.98	40.63	20.46	57.73	100	0	P	H
													H
													H
		10520	43.12	-30.88	74	49.09	37.32	16.49	59.78	100	0	P	V
		15780	48.73	-25.27	74	45.37	40.63	20.46	57.73	100	0	P	V
													V
													V
802.11n HT20 CH 60 5300MHz		10600	42.4	-31.6	74	48.08	37.42	16.56	59.66	100	0	P	H
		15900	48.76	-25.24	74	45.12	40.78	20.52	57.66	100	0	P	H
													H
													H
		10600	41.65	-32.35	74	47.33	37.42	16.56	59.66	100	0	P	V
		15900	48.4	-25.6	74	44.76	40.78	20.52	57.66	100	0	P	V
													V
													V
802.11n HT20 CH 64 5320MHz		10640	41.99	-32.01	74	47.53	37.47	16.6	59.61	100	0	P	H
		15960	47.25	-26.75	74	43.46	40.86	20.55	57.62	100	0	P	H
													H
													H
		10640	42.57	-31.43	74	48.11	37.47	16.6	59.61	100	0	P	V
		15960	47.4	-26.6	74	43.61	40.86	20.55	57.62	100	0	P	V
													V
													V
Remark	1. No other spurious found. 2. All results are PASS against Peak and Average limit line.												

15E Band 2 5250~5350MHz

WIFI 802.11n HT40 (Band Edge @ 3m) (Standalone)

WIFI Ant.	Note	Frequency (MHz)	Level (dBμV/m)	Over Limit (dB)	Limit Line (dBμV/m)	Read Level (dBμV)	Antenna Factor (dB/m)	Cable Loss (dB)	Preamp Factor (dB)	Ant Pos (cm)	Table Pos (deg)	Peak Avg. (P/A)	Pol. (H/V)
802.11n HT40 CH 54 5270MHz		5135.3	57.8	-16.2	74	44.16	34.59	11.5	32.45	224	330	P	H
		5148.5	44.84	-9.16	54	31.17	34.61	11.55	32.49	224	330	A	H
	*	5268	104.45	-	-	90.79	34.77	11.65	32.76	224	330	P	H
	*	5268	95.51	-	-	81.85	34.77	11.65	32.76	224	330	A	H
		5351.32	57.96	-16.04	74	44.54	34.89	11.71	33.18	224	330	P	H
		5350.66	45.78	-8.22	54	32.36	34.89	11.71	33.18	224	330	A	H
		5007.35	57.63	-16.37	74	44.13	34.42	11.37	32.29	106	286	P	V
		5137.4	44.72	-9.28	54	31.08	34.59	11.5	32.45	106	286	A	V
	*	5269	100.89	-	-	87.23	34.77	11.65	32.76	106	286	P	V
	*	5269	91.38	-	-	77.72	34.77	11.65	32.76	106	286	A	V
		5384.76	57.89	-16.11	74	44.49	34.94	11.74	33.28	106	286	P	V
		5361.99	44.98	-9.02	54	31.54	34.91	11.71	33.18	106	286	A	V
802.11n HT40 CH 62 5310MHz		5053.4	57.36	-16.64	74	43.83	34.47	11.41	32.35	201	360	P	H
		5147.15	44.7	-9.3	54	31.03	34.61	11.55	32.49	201	360	A	H
	*	5310	102.06	-	-	88.51	34.84	11.68	32.97	201	360	P	H
	*	5310	92.7	-	-	79.15	34.84	11.68	32.97	201	360	A	H
		5350.11	68.94	-5.06	74	55.52	34.89	11.71	33.18	201	360	P	H
		5350.22	53.16	-0.84	54	39.74	34.89	11.71	33.18	201	360	A	H
		5145.95	57.16	-16.84	74	43.49	34.61	11.55	32.49	200	74	P	V
		5138.15	44.66	-9.34	54	31.02	34.59	11.5	32.45	200	74	A	V
	*	5310	96.77	-	-	83.22	34.84	11.68	32.97	200	74	P	V
	*	5310	87.78	-	-	74.23	34.84	11.68	32.97	200	74	A	V
		5350.88	64.79	-9.21	74	51.37	34.89	11.71	33.18	200	74	P	V
		5350.33	49.95	-4.05	54	36.53	34.89	11.71	33.18	200	74	A	V
Remark	1. No other spurious found. 2. All results are PASS against Peak and Average limit line.												

15E Band 2 5250~5350MHz

WIFI 802.11n HT40 (Harmonic @ 3m) (Standalone)

WIFI Ant.	Note	Frequency	Level	Over Limit	Limit Line	Read Level	Antenna Factor	Cable Loss	Preamp Factor	Ant Pos	Table Pos	Peak Avg.	Pol.
1		(MHz)	(dBμV/m)	(dB)	(dBμV/m)	(dBμV)	(dB/m)	(dB)	(dB)	(cm)	(deg)	(P/A)	(H/V)
802.11n HT40 CH 54 5270MHz		10540	42.8	-31.2	74	48.72	37.34	16.49	59.75	100	0	P	H
		15810	48.28	-25.72	74	44.84	40.67	20.48	57.71	100	0	P	H
													H
													H
		10540	41.97	-32.03	74	47.89	37.34	16.49	59.75	100	0	P	V
		15810	48.36	-25.64	74	44.92	40.67	20.48	57.71	100	0	P	V
													V
													V
802.11n HT40 CH 62 5310MHz		10620	42.63	-31.37	74	48.26	37.44	16.56	59.63	100	0	P	H
		15930	47.98	-26.02	74	44.27	40.82	20.53	57.64	100	0	P	H
													H
													H
		10620	41.57	-32.43	74	47.2	37.44	16.56	59.63	100	0	P	V
		15930	47.7	-26.3	74	43.99	40.82	20.53	57.64	100	0	P	V
													V
													V
Remark	1. No other spurious found. 2. All results are PASS against Peak and Average limit line.												

15E Band 3 5470~5725MHz

WIFI 802.11a (Band Edge @ 3m) (Standalone)

WIFI Ant.	Note	Frequency (MHz)	Level (dBµV/m)	Over Limit (dB)	Limit Line (dBµV/m)	Read Level (dBµV)	Antenna Factor (dB/m)	Cable Loss (dB)	Preamp Factor (dB)	Ant Pos (cm)	Table Pos (deg)	Peak Avg. (P/A)	Pol. (H/V)
802.11a CH 100 5500MHz		5470	73.25	-0.75	74	59.91	35.05	11.86	33.57	248	3	P	H
		5470	52.56	-1.44	54	39.22	35.05	11.86	33.57	248	3	A	H
	*	5500	108.98	-	-	95.68	35.1	11.86	33.66	248	3	P	H
	*	5500	99.41	-	-	86.11	35.1	11.86	33.66	248	3	A	H
													H
													H
		5469.84	69.69	-4.31	74	56.35	35.05	11.86	33.57	169	9	P	V
		5469.52	48.22	-5.78	54	34.88	35.05	11.86	33.57	169	9	A	V
	*	5500	102.86	-	-	89.56	35.1	11.86	33.66	169	9	P	V
	*	5500	93.33	-	-	80.03	35.1	11.86	33.66	169	9	A	V
													V
													V
802.11a CH 116 5580MHz		5372.88	58.04	-15.96	74	44.6	34.91	11.71	33.18	217	6	P	H
		5386	44.18	-9.82	54	30.78	34.94	11.74	33.28	217	6	A	H
	*	5580	110.1	-	-	96.99	35.14	11.98	34.01	217	6	P	H
	*	5580	100.48	-	-	87.37	35.14	11.98	34.01	217	6	A	H
		5733.96	57.65	-16.35	74	44.33	35.23	12.26	34.17	217	6	P	H
		5755.96	43.93	-10.07	54	30.54	35.26	12.33	34.2	217	6	A	H
		5371.6	57.32	-16.68	74	43.88	34.91	11.71	33.18	103	85	P	V
		5391.28	44.08	-9.92	54	30.68	34.94	11.74	33.28	103	85	A	V
	*	5580	102.64	-	-	89.53	35.14	11.98	34.01	103	85	P	V
	*	5580	93.13	-	-	80.02	35.14	11.98	34.01	103	85	A	V
		5763.64	57.4	-16.6	74	44.01	35.26	12.33	34.2	103	85	P	V
		5759.96	44.02	-9.98	54	30.63	35.26	12.33	34.2	103	85	A	V

802.11a CH 140 5700MHz	*	5700	106.53	-	-	93.26	35.21	12.18	34.12	224	360	P	H
	*	5700	97.24	-	-	83.97	35.21	12.18	34.12	224	360	A	H
		5725.08	71.92	-2.08	74	58.58	35.23	12.26	34.15	224	360	P	H
		5725.48	50.46	-3.54	54	37.12	35.23	12.26	34.15	224	360	A	H
													H
													H
	*	5702	99.51	-	-	86.15	35.22	12.26	34.12	196	18	P	V
	*	5702	90.2	-	-	76.84	35.22	12.26	34.12	196	18	A	V
		5728.68	67.49	-6.51	74	54.15	35.23	12.26	34.15	196	18	P	V
		5725.32	46.93	-7.07	54	33.59	35.23	12.26	34.15	196	18	A	V
													V
													V
Remark	1. No other spurious found. 2. All results are PASS against Peak and Average limit line.												

15E Band 3 5470~5725MHz

WIFI 802.11a (Harmonic @ 3m) (Standalone)

WIFI Ant.	Note	Frequency (MHz)	Level (dBμV/m)	Over Limit (dB)	Limit Line (dBμV/m)	Read Level (dBμV)	Antenna Factor (dB/m)	Cable Loss (dB)	Preamp Factor (dB)	Ant Pos (cm)	Table Pos (deg)	Peak Avg. (P/A)	Pol. (H/V)
802.11a CH 100 5500MHz		11000	43.67	-30.33	74	47.93	37.9	16.94	59.1	100	0	P	H
		16500	49.13	-24.87	74	43.65	41.4	20.88	56.8	100	0	P	H
													H
													H
		11000	43.68	-30.32	74	47.94	37.9	16.94	59.1	100	0	P	V
		16500	49.57	-24.43	74	44.09	41.4	20.88	56.8	100	0	P	V
													V
													V
802.11a CH 116 5580MHz		11160	43.85	-30.15	74	47.44	38	17.08	58.67	100	0	P	H
		16740	49.81	-24.19	74	43.5	41.88	21.04	56.61	100	0	P	H
													H
													H
		11160	43.27	-30.73	74	46.86	38	17.08	58.67	100	0	P	V
		16740	49.49	-24.51	74	43.18	41.88	21.04	56.61	100	0	P	V
													V
													V
802.11a CH 140 5700MHz		11400	44.29	-29.71	74	46.9	38.14	17.31	58.06	100	0	P	H
		17100	50.33	-23.67	74	43.2	42.32	21.27	56.46	100	0	P	H
													H
													H
		11400	43.72	-30.28	74	46.33	38.14	17.31	58.06	100	0	P	V
		17100	50.24	-23.76	74	43.11	42.32	21.27	56.46	100	0	P	V
													V
													V
Remark	1. No other spurious found. 2. All results are PASS against Peak and Average limit line.												

15E Band 3 5470~5725MHz

WIFI 802.11n HT20 (Band Edge @ 3m) (Standalone)

WIFI Ant.	Note	Frequency (MHz)	Level (dBμV/m)	Over Limit (dB)	Limit Line (dBμV/m)	Read Level (dBμV)	Antenna Factor (dB/m)	Cable Loss (dB)	Preamp Factor (dB)	Ant Pos (cm)	Table Pos (deg)	Peak Avg. (P/A)	Pol. (H/V)
802.11n HT20 CH 100 5500MHz		5465.2	72.24	-1.76	74	58.9	35.05	11.86	33.57	268	360	P	H
		5470	49.73	-4.27	54	36.39	35.05	11.86	33.57	268	360	A	H
	*	5500	108.73	-	-	95.43	35.1	11.86	33.66	268	360	P	H
	*	5500	98.81	-	-	85.51	35.1	11.86	33.66	268	360	A	H
													H
													H
		5470	64.71	-9.29	74	51.37	35.05	11.86	33.57	195	61	P	V
		5469.68	46.82	-7.18	54	33.48	35.05	11.86	33.57	195	61	A	V
	*	5500	101.5	-	-	88.2	35.1	11.86	33.66	195	61	P	V
	*	5500	91.73	-	-	78.43	35.1	11.86	33.66	195	61	A	V
													V
													V
802.11n HT20 CH 116 5580MHz		5359.92	57.5	-16.5	74	44.08	34.89	11.71	33.18	232	7	P	H
		5407.6	44.24	-9.76	54	30.93	34.96	11.74	33.39	232	7	A	H
	*	5580	107.9	-	-	94.79	35.14	11.98	34.01	232	7	P	H
	*	5580	88.34	-	-	75.23	35.14	11.98	34.01	232	7	A	H
		5725.72	57.44	-16.56	74	44.1	35.23	12.26	34.15	232	7	P	H
		5747.88	43.98	-10.02	54	30.58	35.24	12.33	34.17	232	7	A	H
		5426.96	57.45	-16.55	74	44.15	34.98	11.8	33.48	200	6	P	V
		5398.96	44.28	-9.72	54	30.97	34.96	11.74	33.39	200	6	A	V
	*	5580	103.04	-	-	89.93	35.14	11.98	34.01	200	6	P	V
	*	5580	92.95	-	-	79.84	35.14	11.98	34.01	200	6	A	V
		5725	57.51	-16.49	74	44.17	35.23	12.26	34.15	200	6	P	V
		5764.36	44.18	-9.82	54	30.79	35.26	12.33	34.2	200	6	A	V

802.11n HT20 CH 140 5700MHz	*	5700	104.38	-	-	91.11	35.21	12.18	34.12	238	15	P	H
	*	5700	95.16	-	-	81.89	35.21	12.18	34.12	238	15	A	H
		5725.08	69.74	-4.26	74	56.4	35.23	12.26	34.15	238	15	P	H
		5725	52.93	-1.07	54	39.59	35.23	12.26	34.15	238	15	A	H
													H
													H
	*	5700	94.95	-	-	81.68	35.21	12.18	34.12	200	58	P	V
	*	5700	85.48	-	-	72.21	35.21	12.18	34.12	200	58	A	V
		5725	61.73	-12.27	74	48.39	35.23	12.26	34.15	200	58	P	V
		5725	45.84	-8.16	54	32.5	35.23	12.26	34.15	200	58	A	V
													V
													V
Remark	1. No other spurious found. 2. All results are PASS against Peak and Average limit line.												

15E Band 3 5470~5725MHz

WIFI 802.11n HT20 (Harmonic @ 3m) (Standalone)

WIFI Ant.	Note	Frequency	Level	Over Limit	Limit Line	Read Level	Antenna Factor	Cable Loss	Preamp Factor	Ant Pos	Table Pos	Peak Avg.	Pol.
1		(MHz)	(dBμV/m)	(dB)	(dBμV/m)	(dBμV)	(dB/m)	(dB)	(dB)	(cm)	(deg)	(P/A)	(H/V)
802.11n HT20 CH 100 5500MHz		11000	44.76	-29.24	74	49.02	37.9	16.94	59.1	100	0	P	H
		16500	49.3	-24.7	74	43.82	41.4	20.88	56.8	100	0	P	H
													H
													H
		11000	44.41	-29.59	74	48.67	37.9	16.94	59.1	100	0	P	V
		16500	48.92	-25.08	74	43.44	41.4	20.88	56.8	100	0	P	V
													V
													V
802.11n HT20 CH 116 5580MHz		11160	43.82	-30.18	74	47.41	38	17.08	58.67	100	0	P	H
		16740	49.41	-24.59	74	43.1	41.88	21.04	56.61	100	0	P	H
													H
													H
		11160	44.09	-29.91	74	47.68	38	17.08	58.67	100	0	P	V
		16740	49.42	-24.58	74	43.11	41.88	21.04	56.61	100	0	P	V
													V
													V
802.11n HT20 CH 140 5700MHz		11400	44	-30	74	46.61	38.14	17.31	58.06	100	0	P	H
		17100	50.61	-23.39	74	43.48	42.32	21.27	56.46	100	0	P	H
													H
													H
		11400	43.93	-30.07	74	46.54	38.14	17.31	58.06	100	0	P	V
		17100	51.03	-22.97	74	43.9	42.32	21.27	56.46	100	0	P	V
													V
													V
Remark	1. No other spurious found. 2. All results are PASS against Peak and Average limit line.												

15E Band 3 5470~5725MHz

WIFI 802.11n HT40 (Band Edge @ 3m) (Standalone)

WIFI Ant.	Note	Frequency (MHz)	Level (dBμV/m)	Over Limit (dB)	Limit Line (dBμV/m)	Read Level (dBμV)	Antenna Factor (dB/m)	Cable Loss (dB)	Preamp Factor (dB)	Ant Pos (cm)	Table Pos (deg)	Peak Avg. (P/A)	Pol. (H/V)
802.11n HT40 CH 102 5510MHz		5467.44	68.58	-5.42	74	55.24	35.05	11.86	33.57	259	350	P	H
		5469.52	52.96	-1.04	54	39.62	35.05	11.86	33.57	259	350	A	H
	*	5510	100.96	-	-	87.68	35.1	11.92	33.74	259	350	P	H
	*	5510	92	-	-	78.72	35.1	11.92	33.74	259	350	A	H
		5736.92	57.06	-16.94	74	43.73	35.24	12.26	34.17	259	350	P	H
		5748.76	44.81	-9.19	54	31.41	35.24	12.33	34.17	259	350	A	H
		5468.88	63.06	-10.94	74	49.72	35.05	11.86	33.57	186	96	P	V
		5470	47.48	-6.52	54	34.14	35.05	11.86	33.57	186	96	A	V
	*	5510	94.53	-	-	81.25	35.1	11.92	33.74	186	96	P	V
	*	5510	85.08	-	-	71.8	35.1	11.92	33.74	186	96	A	V
		5761.64	57.22	-16.78	74	43.83	35.26	12.33	34.2	186	96	P	V
		5755.96	44.67	-9.33	54	31.28	35.26	12.33	34.2	186	96	A	V
802.11n HT40 CH 110 5550MHz		5356.88	56.9	-17.1	74	43.48	34.89	11.71	33.18	102	338	P	H
		5405.84	44.89	-9.11	54	31.58	34.96	11.74	33.39	102	338	A	H
	*	5548	102.31	-	-	89.03	35.13	11.98	33.83	102	338	P	H
	*	5548	93.03	-	-	79.75	35.13	11.98	33.83	102	338	A	H
		5737.96	57.4	-16.6	74	44.07	35.24	12.26	34.17	102	338	P	H
		5748.28	44.66	-9.34	54	31.26	35.24	12.33	34.17	102	338	A	H
		5353.68	58.54	-15.46	74	45.12	34.89	11.71	33.18	102	275	P	V
		5386.16	44.96	-9.04	54	31.56	34.94	11.74	33.28	102	275	A	V
	*	5548	97.06	-	-	83.78	35.13	11.98	33.83	102	275	P	V
	*	5548	87.94	-	-	74.66	35.13	11.98	33.83	102	275	A	V
		5764.44	57.28	-16.72	74	43.89	35.26	12.33	34.2	102	275	P	V
		5756.68	44.77	-9.23	54	31.38	35.26	12.33	34.2	102	275	A	V

802.11n HT40 CH 134 5670MHz		5390.16	56.91	-17.09	74	43.51	34.94	11.74	33.28	101	338	P	H
		5382.16	45.15	-8.85	54	31.75	34.94	11.74	33.28	101	338	A	H
	*	5668	103.63	-	-	90.34	35.2	12.18	34.09	101	338	P	H
	*	5668	93.6	-	-	80.31	35.2	12.18	34.09	101	338	A	H
		5726.76	66.75	-7.25	74	53.41	35.23	12.26	34.15	101	338	P	H
		5725.24	50.32	-3.68	54	36.98	35.23	12.26	34.15	101	338	A	H
		5390	57.97	-16.03	74	44.57	34.94	11.74	33.28	100	114	P	V
		5386.48	45.03	-8.97	54	31.63	34.94	11.74	33.28	100	114	A	V
	*	5672	95.26	-	-	81.97	35.2	12.18	34.09	100	114	P	V
	*	5672	86.2	-	-	72.91	35.2	12.18	34.09	100	114	A	V
		5725.56	60.59	-13.41	74	47.25	35.23	12.26	34.15	100	114	P	V
		5730.12	45.31	-8.69	54	31.97	35.23	12.26	34.15	100	114	A	V
Remark	1. No other spurious found. 2. All results are PASS against Peak and Average limit line.												

15E Band 3 5470~5725MHz

WIFI 802.11n HT40 (Harmonic @ 3m) (Standalone)

WIFI Ant.	Note	Frequency	Level	Over Limit	Limit Line	Read Level	Antenna Factor	Cable Loss	Preamp Factor	Ant Pos	Table Pos	Peak Avg.	Pol.
1		(MHz)	(dBμV/m)	(dB)	(dBμV/m)	(dBμV)	(dB/m)	(dB)	(dB)	(cm)	(deg)	(P/A)	(H/V)
802.11n HT40 CH 102 5510MHz		11020	43.83	-30.17	74	48.04	37.91	16.94	59.06	100	0	P	H
		16530	49.07	-24.93	74	43.46	41.47	20.91	56.77	100	0	P	H
													H
													H
		11020	43.55	-30.45	74	47.76	37.91	16.94	59.06	100	0	P	V
		16530	49.05	-24.95	74	43.44	41.47	20.91	56.77	100	0	P	V
													V
													V
802.11n HT40 CH 110 5550MHz		11100	43.29	-30.71	74	47.16	37.96	17.01	58.84	100	0	P	H
		16650	49.41	-24.59	74	43.39	41.71	20.99	56.68	100	0	P	H
													H
													H
		11100	43.21	-30.79	74	47.08	37.96	17.01	58.84	100	0	P	V
		16650	49.72	-24.28	74	43.7	41.71	20.99	56.68	100	0	P	V
													V
													V
802.11n HT40 CH 134 5670MHz		11340	43.79	-30.21	74	46.69	38.1	17.23	58.23	100	0	P	H
		17010	50.31	-23.69	74	43.11	42.39	21.22	56.41	100	0	P	H
													H
													H
		11340	43.67	-30.33	74	46.57	38.1	17.23	58.23	100	0	P	V
		17010	49.95	-24.05	74	42.75	42.39	21.22	56.41	100	0	P	V
													V
													V
Remark	1. No other spurious found. 2. All results are PASS against Peak and Average limit line.												

15E Emission below 1GHz

WIFI 802.11n HT40 (LF @ 3m) (Standalone)

WIFI Ant.	Note	Frequency (MHz)	Level (dBμV/m)	Over Limit (dB)	Limit Line (dBμV/m)	Read Level (dBμV)	Antenna Factor (dB/m)	Cable Loss (dB)	Preamp Factor (dB)	Ant Pos (cm)	Table Pos (deg)	Peak Avg. (P/A)	Pol. (H/V)
802.11n HT40 LF		41.34	22.34	-17.66	40	39.17	12.6	1.77	31.2	190	203	P	H
		98.31	22.83	-20.67	43.5	41.95	9.92	2.06	31.1	-	-	P	H
		130.44	23.11	-20.39	43.5	39.93	11.9	2.38	31.1	-	-	P	H
		323.8	21.55	-24.45	46	35.71	13.56	3.28	31	-	-	P	H
		592.6	23	-23	46	30.02	19.53	4.08	30.63	-	-	P	H
		795.6	26.11	-19.89	46	29.85	21.95	4.62	30.31	-	-	P	H
													H
													H
													H
													H
													H
													H
		46.47	23.2	-16.8	40	42.83	9.8	1.77	31.2	138	84	P	V
		97.77	26.26	-17.24	43.5	45.38	9.92	2.06	31.1	-	-	P	V
		259.5	20.6	-25.4	46	34.64	14	2.96	31	-	-	P	V
		553.4	23.02	-22.98	46	29.91	19.88	4.01	30.78	-	-	P	V
		783	25.26	-20.74	46	29.01	21.97	4.62	30.34	-	-	P	V
		954.5	27.26	-18.74	46	28.16	24.54	4.94	30.38	-	-	P	V
													V
													V
													V
													V
													V
													V
Remark	1. No other spurious found. 2. All results are PASS against limit line.												

15E Band 1 5150~5250MHz

WIFI 802.11n HT40 (Band Edge @ 3m) (with adapter1)

WIFI Ant. 1	Note	Frequency (MHz)	Level (dBμV/m)	Over Limit (dB)	Limit Line (dBμV/m)	Read Level (dBμV)	Antenna Factor (dB/m)	Cable Loss (dB)	Preamp Factor (dB)	Ant Pos (cm)	Table Pos (deg)	Peak Avg. (P/A)	Pol. (H/V)
802.11n HT40 CH 38 5190MHz		5150	72.47	-1.53	74	58.8	34.61	11.55	32.49	236	358	P	H
		5149.7	53.88	-0.12	54	40.21	34.61	11.55	32.49	236	358	A	H
	*	5189	103.06	-	-	89.33	34.66	11.59	32.52	236	358	P	H
	*	5189	94.34	-	-	80.61	34.66	11.59	32.52	236	358	A	H
		5393.67	57.65	-16.35	74	44.25	34.94	11.74	33.28	236	358	P	H
		5396.75	44.97	-9.03	54	31.55	34.96	11.74	33.28	236	358	A	H
		5147.45	65.67	-8.33	74	52	34.61	11.55	32.49	100	279	P	V
		5149.85	49.24	-4.76	54	35.57	34.61	11.55	32.49	100	279	A	V
	*	5191	97.28	-	-	83.53	34.68	11.59	32.52	100	279	P	V
	*	5191	88.38	-	-	74.63	34.68	11.59	32.52	100	279	A	V
		5389.27	57.93	-16.07	74	44.53	34.94	11.74	33.28	100	279	P	V
		5383.11	45.01	-8.99	54	31.61	34.94	11.74	33.28	100	279	A	V
Remark	1. No other spurious found. 2. All results are PASS against Peak and Average limit line.												

15E Band 1 5150~5250MHz

WIFI 802.11n HT40 (Harmonic @ 3m) (with adapter1)

WIFI Ant. 1	Note	Frequency (MHz)	Level (dBμV/m)	Over Limit (dB)	Limit Line (dBμV/m)	Read Level (dBμV)	Antenna Factor (dB/m)	Cable Loss (dB)	Preamp Factor (dB)	Ant Pos (cm)	Table Pos (deg)	Peak Avg. (P/A)	Pol. (H/V)
802.11n HT40 CH 38 5190MHz		10380	42.4	-31.6	74	48.72	37.23	16.34	59.89	100	0	P	H
		15570	47.92	-26.08	74	45.02	40.38	20.38	57.86	100	0	P	H
													H
													H
		10380	42.87	-31.13	74	49.19	37.23	16.34	59.89	100	0	P	V
		15570	47.82	-26.18	74	44.92	40.38	20.38	57.86	100	0	P	V
													V
													V
Remark	1. No other spurious found. 2. All results are PASS against Peak and Average limit line.												

15E Emission below 1GHz

WIFI 802.11n HT40 (LF @ 3m) (with adapter1)

WIFI Ant.	Note	Frequency (MHz)	Level (dBμV/m)	Over Limit (dB)	Limit Line (dBμV/m)	Read Level (dBμV)	Antenna Factor (dB/m)	Cable Loss (dB)	Preamp Factor (dB)	Ant Pos (cm)	Table Pos (deg)	Peak Avg. (P/A)	Pol. (H/V)
802.11n HT40 LF		74.55	21.51	-18.49	40	43.85	6.8	2.06	31.2	-	-	P	H
		157.17	25.53	-17.97	43.5	43.48	10.62	2.61	31.18	-	-	P	H
		240.6	21.52	-24.48	46	38.16	11.4	2.96	31	-	-	P	H
		384	22.91	-23.09	46	35.11	15.26	3.52	30.98	-	-	P	H
		736.8	25.9	-20.1	46	29.75	22.14	4.41	30.4	-	-	P	H
		836.9	30.12	-15.88	46	32.71	23.08	4.7	30.37	120	59	P	H
													H
													H
													H
													H
													H
													H
		101.01	28.02	-15.48	43.5	46.33	10.42	2.38	31.11	100	139	P	V
		237.63	22.51	-23.49	46	39.49	11.06	2.96	31	-	-	P	V
		259.5	20.6	-25.4	46	34.64	14	2.96	31	-	-	P	V
		423.9	21.28	-24.72	46	31.65	16.78	3.63	30.78	-	-	P	V
		692.7	24.92	-21.08	46	30.45	20.53	4.35	30.41	-	-	P	V
		836.9	29.98	-16.02	46	32.57	23.08	4.7	30.37	-	-	P	V
													V
													V
													V
													V
													V
													V
Remark	1. No other spurious found. 2. All results are PASS against limit line.												

15E Band 1 5150~5250MHz

WIFI 802.11n HT40 (Band Edge @ 3m) (with adapter2)

WIFI Ant. 1	Note	Frequency (MHz)	Level (dBμV/m)	Over Limit (dB)	Limit Line (dBμV/m)	Read Level (dBμV)	Antenna Factor (dB/m)	Cable Loss (dB)	Preamp Factor (dB)	Ant Pos (cm)	Table Pos (deg)	Peak Avg. (P/A)	Pol. (H/V)
802.11n HT40 CH 38 5190MHz		5146.85	72.14	-1.86	74	58.47	34.61	11.55	32.49	101	341	P	H
		5149.55	53.18	-0.82	54	39.51	34.61	11.55	32.49	101	341	A	H
	*	5192	102.24	-	-	88.49	34.68	11.59	32.52	101	341	P	H
	*	5192	92.49	-	-	78.74	34.68	11.59	32.52	101	341	A	H
		5423.7	57.78	-16.22	74	44.39	34.98	11.8	33.39	101	341	P	H
		5371.89	45.23	-8.77	54	31.79	34.91	11.71	33.18	101	341	A	H
		5148.35	62.8	-11.2	74	49.13	34.61	11.55	32.49	100	255	P	V
		5150	48.45	-5.55	54	34.78	34.61	11.55	32.49	100	255	A	V
	*	5192	97.07	-	-	83.32	34.68	11.59	32.52	100	255	P	V
	*	5192	88.07	-	-	74.32	34.68	11.59	32.52	100	255	A	V
		5372	57.75	-16.25	74	44.31	34.91	11.71	33.18	100	255	P	V
		5401.37	45.19	-8.81	54	31.88	34.96	11.74	33.39	100	255	A	V
Remark	1. No other spurious found. 2. All results are PASS against Peak and Average limit line.												

15E Band 1 5150~5250MHz

WIFI 802.11n HT40 (Harmonic @ 3m) (with adapter2)

WIFI Ant. 1	Note	Frequency (MHz)	Level (dBμV/m)	Over Limit (dB)	Limit Line (dBμV/m)	Read Level (dBμV)	Antenna Factor (dB/m)	Cable Loss (dB)	Preamp Factor (dB)	Ant Pos (cm)	Table Pos (deg)	Peak Avg. (P/A)	Pol. (H/V)
802.11n HT40 CH 38 5190MHz		10380	42.72	-31.28	74	49.04	37.23	16.34	59.89	100	0	P	H
		15570	47.39	-26.61	74	44.49	40.38	20.38	57.86	100	0	P	H
													H
													H
		10380	41.79	-32.21	74	48.11	37.23	16.34	59.89	100	0	P	V
		15570	47.51	-26.49	74	44.61	40.38	20.38	57.86	100	0	P	V
													V
													V
Remark	1. No other spurious found. 2. All results are PASS against Peak and Average limit line.												

15E Emission below 1GHz

WIFI 802.11n HT40 (LF @ 3m) (with adapter2)

WIFI	Note	Frequency	Level	Over	Limit	Read	Antenna	Cable	Preamp	Ant	Table	Peak	Pol.
Ant.				Limit	Line	Level	Factor	Loss	Factor	Pos	Pos	Avg.	
1		(MHz)	(dBµV/m)	(dB)	(dBµV/m)	(dBµV)	(dB/m)	(dB)	(dB)	(cm)	(deg)	(P/A)	(H/V)
802.11n HT40 LF		74.82	25.06	-14.94	40	47.4	6.8	2.06	31.2	-	-	P	H
		207.39	19.31	-24.19	43.5	38.55	9.17	2.69	31.1	-	-	P	H
		274.62	22.79	-23.21	46	37.73	12.85	3.16	30.95	-	-	P	H
		421.8	24.03	-21.97	46	34.45	16.74	3.63	30.79	-	-	P	H
		654.9	26.34	-19.66	46	32.26	20.35	4.22	30.49	-	-	P	H
		946.8	31.26	-14.74	46	32.34	24.37	4.94	30.39	110	78	P	H
													H
													H
													H
													H
													H
													H
		98.85	29.79	-13.71	43.5	48.67	10.16	2.06	31.1	100	293	P	V
		193.62	15.87	-27.63	43.5	35.36	8.92	2.69	31.1	-	-	P	V
		269.49	19.77	-26.23	46	34.71	12.9	3.16	31	-	-	P	V
		393.1	22.46	-23.54	46	34.25	15.62	3.52	30.93	-	-	P	V
		708.1	27.81	-18.19	46	32.88	20.92	4.41	30.4	-	-	P	V
		953.8	31.28	-14.72	46	32.21	24.51	4.94	30.38	-	-	P	V
													V
													V
													V
													V
													V
													V
Remark	1. No other spurious found. 2. All results are PASS against limit line.												

Note symbol

*	**Fundamental Frequency** which can be ignored. However, the level of any unwanted emissions shall not exceed the level of the fundamental frequency per 15.209(c).
!	Test result is **over limit** line.
P/A	**P**eak or **A**verage
H/V	**H**orizontal or **V**ertical

A calculation example for radiated spurious emission is shown as below:

WIFI	Note	Frequency	Level	Over	Limit	Read	Antenna	Cable	Preamp	Ant	Table	Peak	Pol.
Ant.				Limit	Line	Level	Factor	Loss	Factor	Pos	Pos	Avg.	
1		(MHz)	(dBμV/m)	(dB)	(dBμV/m)	(dBμV)	(dB/m)	(dB)	(dB)	(cm)	(deg)	(P/A)	(H/V)
802.11b CH 01 2412MHz		2390	55.45	-18.55	74	54.51	32.22	4.58	35.86	103	308	P	H
		2390	43.54	-10.46	54	42.6	32.22	4.58	35.86	103	308	A	H

1. Level(dBμV/m) =

Antenna Factor(dB/m) + Cable Loss(dB) + Read Level(dBμV) - Preamp Factor(dB)

2. Over Limit(dB) = Level(dBμV/m) – Limit Line(dBμV/m)

For Peak Limit @ 2390MHz:

1. Level(dBμV/m)

= Antenna Factor(dB/m) + Cable Loss(dB) + Read Level(dBμV) - Preamp Factor(dB)

= 32.22(dB/m) + 4.58(dB) + 54.51(dBμV) – 35.86 (dB)

= 55.45 (dBμV/m)

2. Over Limit(dB)

= Level(dBμV/m) – Limit Line(dBμV/m)

= 55.45(dBμV/m) – 74(dBμV/m)

= -18.55(dB)

For Average Limit @ 2390MHz:

1. Level(dBμV/m)

= Antenna Factor(dB/m) + Cable Loss(dB) + Read Level(dBμV) - Preamp Factor(dB)

= 32.22(dB/m) + 4.58(dB) + 42.6(dBμV) – 35.86 (dB)

= 43.54 (dBμV/m)

2. Over Limit(dB)

= Level(dBμV/m) – Limit Line(dBμV/m)

= 43.54(dBμV/m) – 54(dBμV/m)

= -10.46(dB)

Both peak and average measured complies with the limit line, so test result is “PASS”.