FCC RF Test Report

APPLICANT	:	Motorola Mobility, LLC
EQUIPMENT	:	Mobile Cellular Phone
BRAND NAME	:	Motorola
MODEL NAME	:	4603
FCC ID	:	IHDT56UB2
STANDARD	:	FCC Part 15 Subpart E §15.407
CLASSIFICATION	:	(NII) Unlicensed National Information Infrastructure

The product was received on May 01, 2015. We, SPORTON INTERNATIONAL INC., would like to declare that the tested sample has been evaluated in accordance with the test procedures and has been in compliance with the applicable technical standards.

The test results in this report apply exclusively to the tested model / sample. Without written approval of SPORTON INTERNATIONAL INC., the test report shall not be reproduced except in full.

Reviewed by: Joseph Lin / Supervisor

Approved by: Jones Tsai / Manager

Testing Laboratory
1190

SPORTON INTERNATIONAL INC.
No. 52, Hwa Ya 1st Rd., Hwa Ya Technology Park, Kwei-Shan District, Tao Yuan City, Taiwan, R.O.C.

TABLE OF CONTENTS

REVISION HISTORY **3**

1 GENERAL DESCRIPTION **4**

1.1 Applicant 4
1.2 Manufacturer 4
1.3 Feature of Equipment Under Test 4
1.4 Product Specification of Equipment Under Test 4
1.5 Modification of EUT 4

APPENDIX A. ORIGINAL REPORT

REVISION HISTORY

REPORT NO.	VERSION	DESCRIPTION	ISSUED DATE
FR550147-02F	Rev. 01	The Bluetooth and WLAN circuitry of this variant model (4603) is identical to that of the parent product (4602), based on the product equality declaration by the manufacturer.	Jul. 08, 2015

1 General Description

1.1 Applicant

Motorola Mobility, LLC
222 W Merchandise Mart Plaza, Suite 1800, Chicago, IL 60654, United States

1.2 Manufacturer

Motorola Mobility, LLC
222 W Merchandise Mart Plaza, Suite 1800, Chicago, IL 60654, United States

1.3 Feature of Equipment Under Test

Product Feature	
Equipment	Mobile Cellular Phone
Brand Name	Motorola
Model Name	4603
FCC ID	IHDT56UB2
EUT supports Radios application	GSM/EGPRS/WCDMA/HSPA/LTE/NFC/FM WLAN 11b/g/n HT20 WLAN 11a/n HT20/HT40 Bluetooth 2.1 EDR Bluetooth 4.1 - LE
HW Version	P2
EUT Stage	Identical Prototype

Remark: The above EUT's information was declared by manufacturer. Please refer to the specifications or user's manual for more detailed description.

1.4 Product Specification of Equipment Under Test

Product Specification subjective to this standard	
Tx/Rx Channel Frequency Range	5725 MHz ~ 5850 MHz
Type of Modulation	802.11a/n : OFDM (BPSK / QPSK / 16QAM / 64QAM)
Antenna Type	Fixed, stamped metal Antenna (The antenna peak gain of EUT is less than 6 dBi)

1.5 Modification of EUT

No modifications are made to the EUT during all test items.

Appendix A. Original Report

Please refer to Sporton report number FR550147F as below.

FCC RF Test Report

APPLICANT	:	Motorola Mobility, LLC
EQUIPMENT	:	Mobile Cellular Phone
BRAND NAME	:	Motorola
MODEL NAME	:	4602
FCC ID	:	IHDT56UB1
STANDARD	:	FCC Part 15 Subpart E §15.407
CLASSIFICATION	:	(NII) Unlicensed National Information Infrastructure

The product was received on May 01, 2015 and testing was completed on Jun. 15, 2015. We, SPORTON INTERNATIONAL INC., would like to declare that the tested sample has been evaluated in accordance with the test procedures and has been in compliance with the applicable technical standards.

The test results in this report apply exclusively to the tested model / sample. Without written approval of SPORTON INTERNATIONAL INC., the test report shall not be reproduced except in full.

Reviewed by: Joseph Lin / Supervisor

Approved by: Jones Tsai / Manager

Testing Laboratory
1190

SPORTON INTERNATIONAL INC.
No. 52, Hwa Ya 1st Rd., Hwa Ya Technology Park, Kwei-Shan District, Tao Yuan City, Taiwan, R.O.C.

TABLE OF CONTENTS

SUMMARY OF TEST RESULT **4**

1 GENERAL DESCRIPTION **5**

1.1 Applicant 5
1.2 Manufacturer 5
1.3 Feature of Equipment Under Test 5
1.4 Product Specification of Equipment Under Test 6
1.5 Modification of EUT 6
1.6 Testing Location 6
1.7 Applicable Standards 7

2 TEST CONFIGURATION OF EQUIPMENT UNDER TEST **8**

2.1 Carrier Frequency and Channel 8
2.2 Pre-Scanned RF Power 9
2.3 Test Mode 10
2.4 Connection Diagram of Test System 11
2.5 Support Unit used in test configuration and system 13
2.6 EUT Operation Test Setup 13
2.7 Measurement Results Explanation Example 14

3 TEST RESULT **15**

3.1 6dB Bandwidth Measurement 15
3.2 Maximum Conducted Output Power Measurement 17
3.3 Power Spectral Density Measurement 18
3.4 Unwanted Emissions Measurement 20
3.5 AC Conducted Emission Measurement 24
3.6 Frequency Stability Measurement 34
3.7 Automatically Discontinue Transmission 35
3.8 Antenna Requirements 36

4 LIST OF MEASURING EQUIPMENT **37**

5 UNCERTAINTY OF EVALUATION **38**

APPENDIX A. CONDUCTED TEST RESULTS

APPENDIX B. RADIATED TEST RESULTS

REVISION HISTORY

REPORT NO.	VERSION	DESCRIPTION	ISSUED DATE
FR550147F	Rev. 01	Initial issue of report	Jul. 01, 2015

SUMMARY OF TEST RESULT

Report Section	FCC Rule	Description	Limit	Result	Remark
3.1	15.403(i)	6dB Bandwidth	> 500kHz	Pass	-
3.2	15.407(a)	Maximum Conducted Output Power	≤ 30 dBm	Pass	-
3.3	15.407(a)	Power Spectral Density	≤ 30 dBm/500kHz	Pass	-
3.4	15.407(b)	Unwanted Emissions	≤ -17, -27 dBm/MHz &15.209(a)	Pass	Under limit 0.43 dB at 5724.600 MHz
3.5	15.207	AC Conducted Emission	15.207(a)	Pass	Under limit 8.50 dB at 2.766 MHz
3.6	15.407(g)	Frequency Stability	Within Operation Band	Pass	-
3.7	15.407(c)	Automatically Discontinue Transmission	Discontinue Transmission	Pass	-
3.8	15.203 & 15.407(a)	Antenna Requirement	N/A	Pass	-

1 General Description

1.1 Applicant

Motorola Mobility, LLC
222 W Merchandise Mart Plaza, Suite 1800, Chicago, IL 60654, United States

1.2 Manufacturer

Motorola Mobility, LLC
222 W Merchandise Mart Plaza, Suite 1800, Chicago, IL 60654, United States

1.3 Feature of Equipment Under Test

Product Feature	
Equipment	Mobile Cellular Phone
Brand Name	Motorola
Model Name	4602
FCC ID	IHDT56UB1
IMEI Code	990006240086388 (for AC Conducted Emission) 990006240060151 (for Radiated Spurious Emission)
EUT supports Radios application	CDMA/EV-DO/GSM/EGPRS/WCDMA/HSPA/LTE/NFC WLAN 11b/g/n HT20 WLAN 11a/n HT20/HT40 Bluetooth 2.1 EDR Bluetooth 4.1 - LE
HW Version	P2
EUT Stage	Identical Prototype

Remark: The above EUT's information was declared by manufacturer. Please refer to the specifications or user's manual for more detailed description.

Accessory List	
AC Adapter 1	Brand Name : Motorola
	Model Name : SPN5791A
AC Adapter 2	Brand Name : Motorola
	Model Name : SPN5865A
Battery	Brand Name : Motorola
	Model Name : FL40
USB Cable	Brand Name : Motorola
	Model Name : SKN6461A
Earphone	Brand Name : Motorola
	Model Name : 89719N

1.4 Product Specification of Equipment Under Test

Product Specification subjective to this standard	
Tx/Rx Channel Frequency Range	5725 MHz ~ 5850 MHz
Maximum Output Power	802.11a : 17.73 dBm / 0.0593 W 802.11n HT20 : 14.58 dBm / 0.0287 W 802.11n HT40 : 14.50 dBm / 0.0282 W
Type of Modulation	802.11a/n : OFDM (BPSK / QPSK / 16QAM / 64QAM)
Antenna Type	Fixed, stamped metal Antenna
Antenna Gain	-4.20 dBi

1.5 Modification of EUT

No modifications are made to the EUT during all test items.

1.6 Testing Location

Sporton Lab is accredited to ISO 17025 by Taiwan Accreditation Foundation (TAF code : 1190) and the FCC designation No. TW1022 under the FCC 2.948(e) by Mutual Recognition Agreement (MRA) in FCC Test.

Test Site	SPORTON INTERNATIONAL INC.		
Test Site Location	No. 52, Hwa Ya 1st Rd., Hwa Ya Technology Park, Kwei-Shan District, Tao Yuan City, Taiwan, R.O.C. TEL: +886-3-327-3456 FAX: +886-3-328-4978		
Test Site No.	**Sporton Site No.**		
	TH02-HY	CO05-HY	03CH07-HY

Note: The test site complies with ANSI C63.4 2009 requirement.

1.7 Applicable Standards

According to the specifications of the manufacturer, the EUT must comply with the requirements of the following standards:

- FCC Part 15 Subpart E
- FCC KDB 789033 D02 General UNII Test Procedures New Rules v01
- ANSI C63.10-2009

Remark:

1. All test items were verified and recorded according to the standards and without any deviation during the test.
2. FCC permits the use of the 1.5 meter table as an alternative in C63.10-2013 through inquiry tracking number 961829.
3. This EUT has also been tested and complied with the requirements of FCC Part 15, Subpart B, recorded in a separate test report.

2 Test Configuration of Equipment Under Test

The EUT has been associated with peripherals and configuration operated in a manner tended to maximize its emission characteristics in a typical application. Frequency range investigated: conducted emission (150 kHz to 30 MHz) and radiated emission (9 kHz to the 10th harmonic of the highest fundamental frequency or to 40 GHz, whichever is lower). For radiated measurement, pre-scanned in three orthogonal panels, X, Y, Z. The worst cases (Z plane) were recorded in this report.

The final configuration from all the combinations and the worst-case data rates were investigated by measuring the maximum power across all the data rates and modulation modes under section 2.2.

Based on the worst configuration found above, the RF power setting is set individually to meet FCC compliance limit for the final conducted and radiated tests shown in section 2.3.

2.1 Carrier Frequency and Channel

Frequency Band	Channel	Freq. (MHz)	Channel	Freq. (MHz)
5725-5850 MHz Band 4 (U-NII-3)	149	5745	157	5785
	151	**5755**	**159**	**5795**
	153	5765	161	5805
	155	5775	165	5825

Note: The above Frequency and Channel in boldface were 802.11n HT40.

2.2 Pre-Scanned RF Power

Preliminary tests were performed in different data rate and data rate associated with the highest power were chosen for full test in the following tables. Final Output Power equals to Measured Output Power adds the duty factor.

Channel	Frequency	5GHz 802.11a Average Power (dBm)							
		Data Rate							
		6 Mbps	9 Mbps	12 Mbps	18 Mbps	24 Mbps	36 Mbps	48 Mbps	54 Mbps
CH 149	5745 MHz	12.46	12.42	12.39	12.43	12.44	12.42	12.41	12.44
CH 157	5785 MHz	**17.73**	16.44	16.65	16.69	16.35	15.93	14.81	13.85
CH 165	5825 MHz	16.22	16.20	16.18	16.12	16.16	15.82	14.95	13.71

Channel	Frequency	5GHz 802.11a Peak Power (dBm)							
		Data Rate							
		6 Mbps	9 Mbps	12 Mbps	18 Mbps	24 Mbps	36 Mbps	48 Mbps	54 Mbps
CH 149	5745 MHz	19.67	19.60	19.56	19.52	19.46	19.42	19.49	19.53
CH 157	5785 MHz	20.93	20.74	20.70	20.78	20.72	20.64	20.54	20.40
CH 165	5825 MHz	20.73	20.70	20.68	20.70	20.69	20.70	20.57	20.38

Channel	Frequency	5GHz 802.11n HT20 Average Power (dBm)							
		Data Rate							
		MCS0	MCS1	MCS2	MCS3	MCS4	MCS5	MCS6	MCS7
CH 149	5745 MHz	10.94	10.86	10.90	10.88	10.91	10.92	10.89	10.91
CH 157	5785 MHz	**14.58**	14.55	14.51	14.53	14.11	13.68	12.40	11.51
CH 165	5825 MHz	14.22	14.15	14.20	14.17	14.01	13.54	12.48	11.45

Channel	Frequency	5GHz 802.11n HT20 Peak Power (dBm)							
		Data Rate							
		MCS0	MCS1	MCS2	MCS3	MCS4	MCS5	MCS6	MCS7
CH 149	5745 MHz	19.74	19.72	19.68	19.72	19.70	19.67	19.60	19.53
CH 157	5785 MHz	20.33	20.27	20.31	20.30	20.20	20.24	20.27	20.16
CH 165	5825 MHz	20.26	20.20	20.25	20.12	20.22	20.20	20.05	19.93

Channel	Frequency	5GHz 802.11n HT40 Average Power (dBm)							
		Data Rate							
		MCS0	MCS1	MCS2	MCS3	MCS4	MCS5	MCS6	MCS7
CH 151	5755 MHz	11.91	11.61	11.86	11.85	11.89	11.85	11.77	11.09
CH 159	5795 MHz	**14.50**	14.45	14.48	14.47	14.41	13.57	12.65	11.63

Channel	Frequency	5GHz 802.11n HT40 Peak Power (dBm)							
		Data Rate							
		MCS0	MCS1	MCS2	MCS3	MCS4	MCS5	MCS6	MCS7
CH 151	5755 MHz	18.96	19.12	19.10	18.78	18.92	18.92	19.07	18.65
CH 159	5795 MHz	20.11	20.01	19.98	20.04	19.84	19.80	19.52	18.84

2.3 Test Mode

Final test mode of conducted test items and radiated spurious emissions are considering the modulation and worse data rates from the power table described in section 2.2.

Modulation	Data Rate
802.11a	**6 Mbps**
802.11n HT20	**MCS0**
802.11n HT40	**MCS0**

AC Conducted Emission	Mode 1 : GSM850 Idle + Bluetooth Link + WLAN (5GHz) Link + USB Cable (Charging from Adapter 1) + Earphone + MP3 Mode 2 : GSM850 Idle + Bluetooth Link + WLAN (5GHz) Link + USB Cable (Charging from Adapter 2) + Earphone + MP3
Remark: The worst case of conducted emission is mode 2; only the test data of it was reported.	

Ch. #		Band IV：5725-5850 MHz		
		802.11a	802.11n HT20	802.11n HT40
L	Low	149	149	151
M	Middle	157	157	-
H	High	165	165	159

2.4 Connection Diagram of Test System

<WLAN Tx Mode for EUT Standalone>

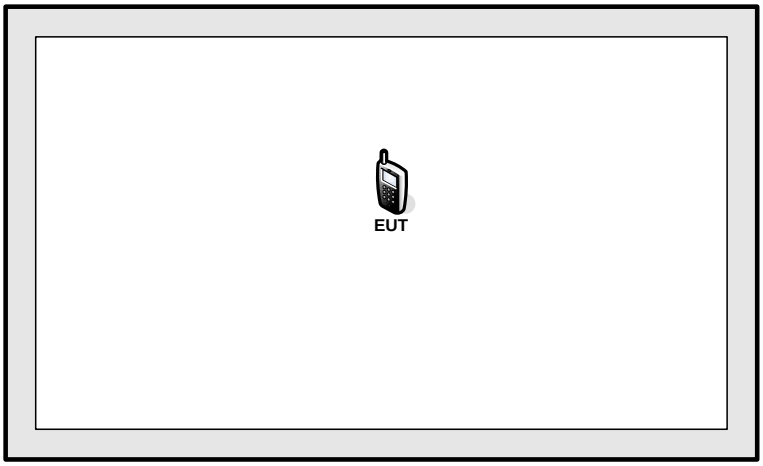

<WLAN Tx Mode with Adapter 1>

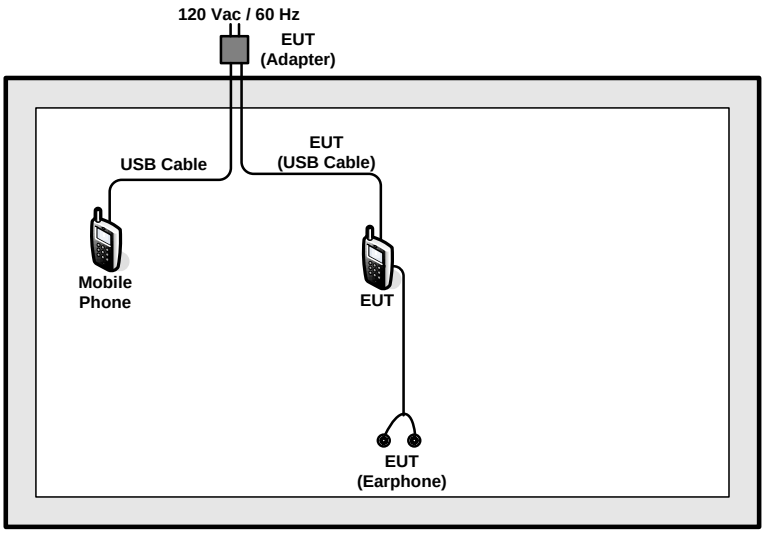

<WLAN Tx Mode with Adapter 2>

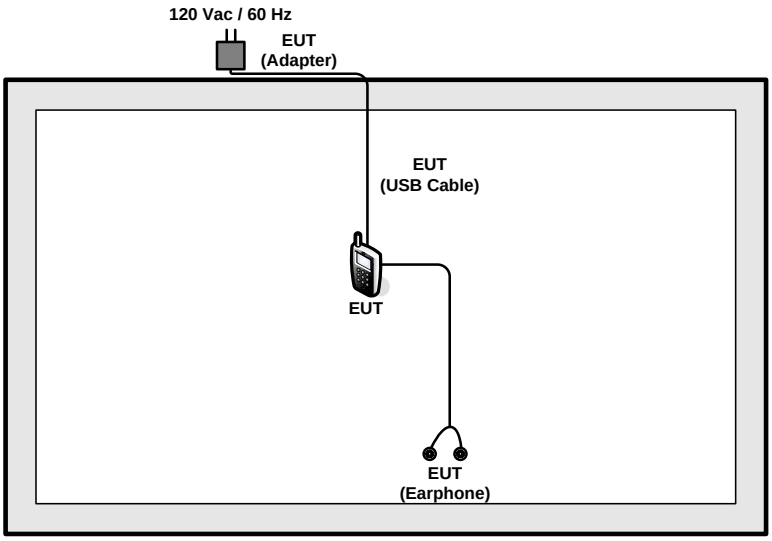

<AC Conducted Emissions with Adapter 1>

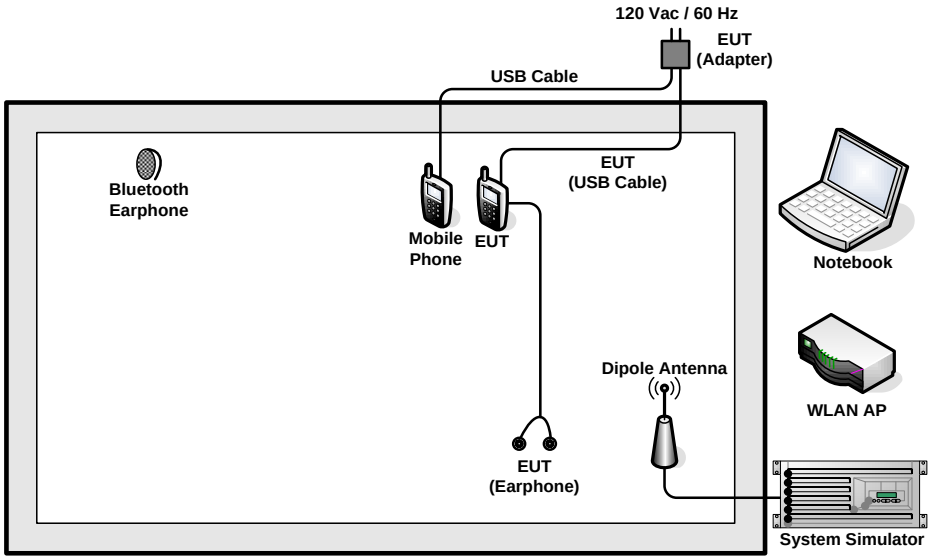

<AC Conducted Emissions with Adapter 2>

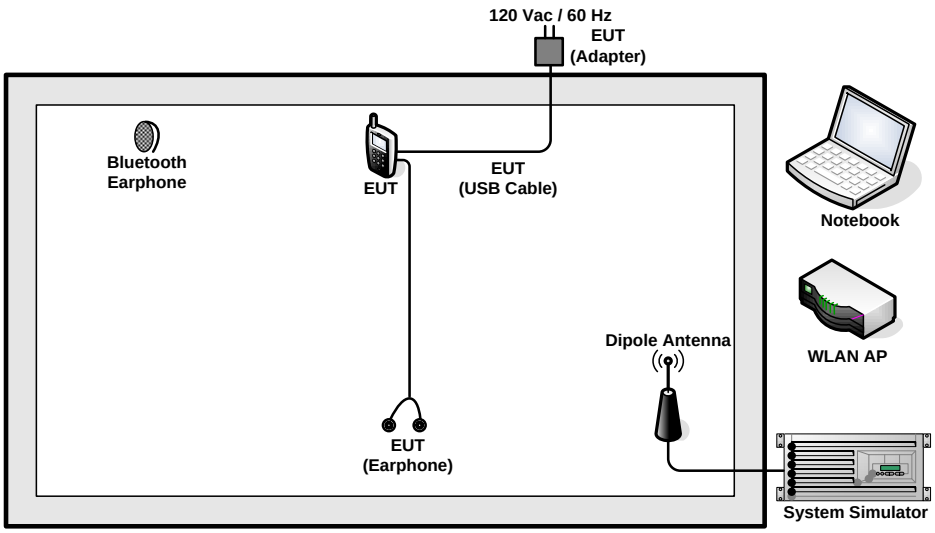

2.5 Support Unit used in test configuration and system

Item	Equipment	Trade Name	Model Name	FCC ID	Data Cable	Power Cord
1.	System Simulator	Anritsu	MT8820C	N/A	N/A	Unshielded, 1.8 m
2.	Bluetooth Earphone	Sony Ericsson	MW600	PY7DDA-2029	N/A	N/A
3.	WLAN AP	D-Link	DIR-628	KA2DIR628A2	N/A	Unshielded, 1.8 m
4.	Notebook	DELL	Latitude E6320	FCC DoC/ Contains FCC ID: QDS-BRCM1054	N/A	AC I/P: Unshielded, 1.2 m DC O/P: Shielded, 1.8 m
5.	Mobile Cellular Phone	Motorola	4602	IHDT56UB1	N/A	N/A
6.	SD Card	SanDisk	MicroSD HC	FCC DoC	N/A	N/A

2.6 EUT Operation Test Setup

For WLAN function, programmed RF utility, “QRCT” installed in the EUT provide functions like channel selection and power level for continuous transmitting and receiving signals.

2.7 Measurement Results Explanation Example

For all conducted test items:

The offset level is set in the spectrum analyzer to compensate the RF cable loss and attenuator factor between EUT conducted output port and spectrum analyzer. With the offset compensation, the spectrum analyzer reading level is exactly the EUT RF output level.

Example :

The spectrum analyzer offset is derived from RF cable loss and attenuator factor.

Offset = RF cable loss + attenuator factor.

Following shows an offset computation example with cable loss 4.2 dB and 10dB attenuator.

Offset(dB) = RF cable loss(dB) + attenuator factor(dB).

= 4.2 + 10 = 14.2 (dB)

3 Test Result

3.1 6dB Bandwidth Measurement

3.1.1 Description of 6dB Bandwidth

The minimum 6 dB bandwidth shall be at least 500 kHz.

3.1.2 Measuring Instruments

The measuring equipment is listed in the section 4 of this test report.

3.1.3 Test Procedures

1. The testing follows FCC KDB 789033 D02 General UNII Test Procedures New Rules v01. Section C) Emission bandwidth for the band 5.725-5.85GHz
2. Set RBW = 100kHz.
3. Set the VBW ≥ 3 x RBW.
4. Detector = Peak.
5. Trace mode = max hold
6. Measure the maximum width of the emission that is 6 dB down from the peak of the emission.
7. Measure and record the results in the test report.

3.1.4 Test Setup

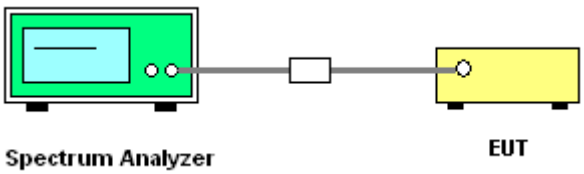

3.1.5 Test Result of 6dB Bandwidth

Please refer to Appendix A.

Maximum 6dB Bandwidth

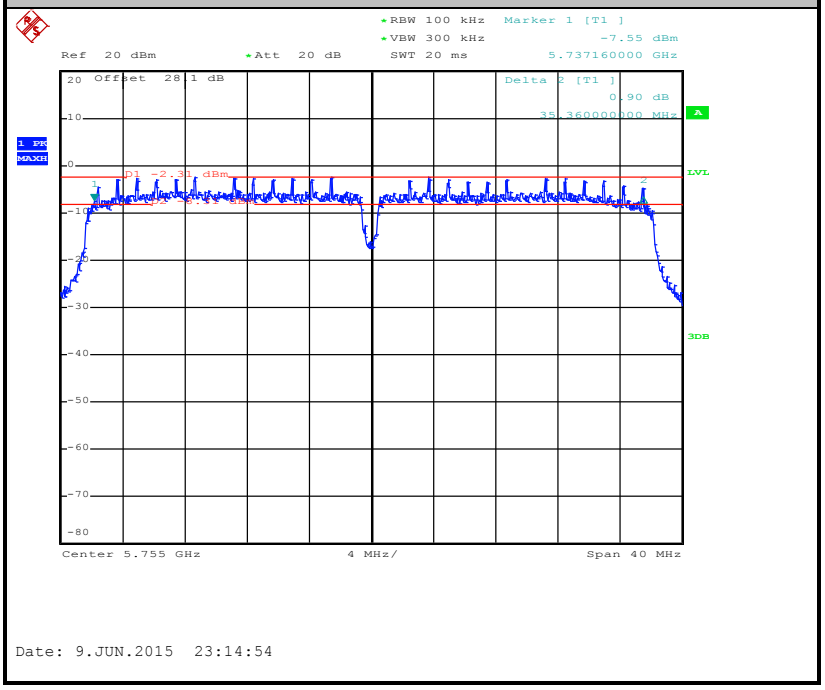

3.2 Maximum Conducted Output Power Measurement

3.2.1 Limit of Maximum Conducted Output Power

For the band 5.725–5.85 GHz, the maximum conducted output power over the frequency band of operation shall not exceed 1 W.

If transmitting antennas of directional gain greater than 6 dBi are used, the peak output power shall be reduced by the amount in dB that the directional gain of the antenna exceeds 6 dBi.

3.2.2 Measuring Instruments

The measuring equipment is listed in the section 4 of this test report.

3.2.3 Test Procedures

The testing follows Method PM of FCC KDB 789033 D02 General UNII Test Procedures New Rules v01.

Method PM (Measurement using an RF average power meter):

1. Measurement is performed using a wideband RF power meter.
2. The EUT is configured to transmit continuously with a consistent duty cycle at its maximum power control level.
3. Measure the average power of the transmitter, and the average power is corrected with duty factor, 10 log(1/x), where x is the duty cycle.

3.2.4 Test Setup

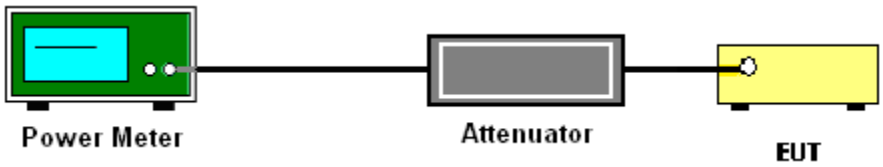

3.2.5 Test Result of Maximum Conducted Output Power

Please refer to Appendix A.

3.3 Power Spectral Density Measurement

3.3.1 Limit of Power Spectral Density

For the band 5.725–5.85 GHz, the maximum power spectral density shall not exceed 30 dBm in any 500-kHz band.

If transmitting antennas of directional gain greater than 6 dBi are used, the peak output power shall be reduced by the amount in dB that the directional gain of the antenna exceeds 6 dBi.

3.3.2 Measuring Instruments

The measuring equipment is listed in the section 4 of this test report.

3.3.3 Test Procedures

The testing follows FCC KDB 789033 D02 General UNII Test Procedures New Rules v01.
Section F) Maximum power spectral density.

 # Method SA-2 #

(trace averaging across on and off times of the EUT transmissions, followed by duty cycle correction).

1. The testing follows Method SA-2 of FCC KDB 789033 D01 General UNII Test Procedures v01r03.
   - Measure the duty cycle.
   - Set span to encompass the entire emission bandwidth (EBW) of the signal.
   - Set RBW = 300 kHz.
   - Set VBW ≥ 1 MHz.
   - Number of points in sweep ≥ 2 Span / RBW.
   - Sweep time = auto.
   - Detector = RMS
   - Trace average at least 100 traces in power averaging mode.
   - Add 10 log(500kHz/RBW) to the test result.
   - Add 10 log(1/x), where x is the duty cycle, to the measured power in order to compute the average power during the actual transmission times. For example, add 10 log(1/0.25) = 6 dB if the duty cycle is 25 percent.
2. The RF output of EUT was connected to the spectrum analyzer by a low loss cable.
3. Each plot has already offset with cable loss, and attenuator loss. Measure the PPSD and record it.

3.3.4 Test Setup

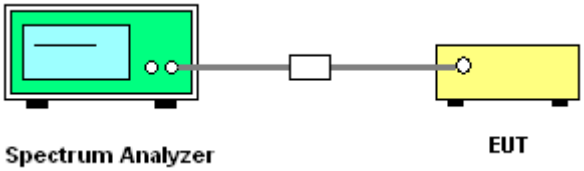

3.3.5 Test Result of Power Spectral Density

Please refer to Appendix A.

Worst Case Power Density (dBm/300kHz)

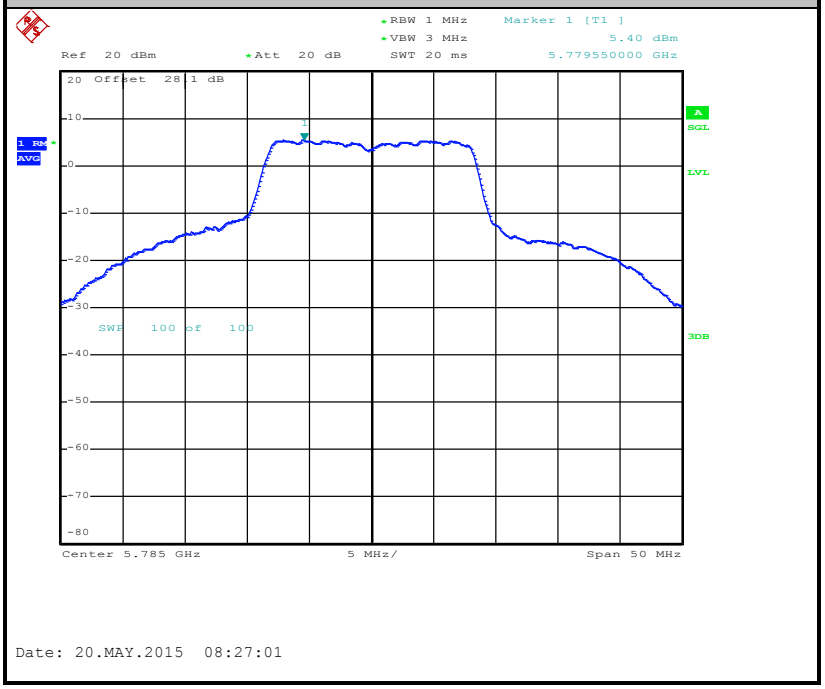

3.4 Unwanted Emissions Measurement

This section as specified in FCC Part 15.407(b) is to measure unwanted emissions through radiated measurement for band edge spurious emissions and out of band emissions measurement. The unwanted emissions shall comply with 15.407(b)(1) to (6), and restricted bands per FCC Part15.205.

3.4.1 Limit of Unwanted Emissions

(1) For transmitters operating in the 5725-5850 MHz band: all emissions within the frequency range from the band edge to 10 MHz above or below the band edge shall not exceed an EIRP of -17 dBm/MHz (78.3dBμV/m); for frequencies 10 MHz or greater above or below the band edge, emissions shall not exceed an EIRP of -27 dBm/MHz (68.3dBμV/m).

(2) Unwanted spurious emissions fallen in restricted bands per FCC Part15.205 shall comply with the general field strength limits set forth in § 15.209 as below table,

Frequency (MHz)	Field Strength (microvolts/meter)	Measurement Distance (meters)
0.009 – 0.490	2400/F(kHz)	300
0.490 – 1.705	24000/F(kHz)	30
1.705 – 30.0	30	30
30 – 88	100	3
88 – 216	150	3
216 - 960	200	3
Above 960	500	3

Note: The following formula is used to convert the EIRP to field strength.

$$E=\frac{1000000\sqrt{30P}}{3}$$ μV/m, where P is the eirp (Watts)

EIRP (dBm)	Field Strength at 3m (dBμV/m)
-17	78.3
- 27	68.3

(3) KDB789033 v01r03 H)2)c)(i) As specified in 15.407(b), emissions above 1000 MHz that are outside of the restricted bands are subject to a peak emission limit of -27 dBm/MHz (or -17 dBm/MHz as specified in 15.407(b)(4)). However, an out-of-band emission that complies with both the average and peak limits of 15.209 is not required to satisfy the -27 dBm/MHz or -17 dBm/MHz peak emission limit.

3.4.2 Measuring Instruments

The measuring equipment is listed in the section 4 of this test report.

3.4.3 Test Procedures

1. The testing follows FCC KDB 789033 D02 General UNII Test Procedures New Rules v01. Section G) Unwanted emissions measurement.

   (1) Procedure for Unwanted Emissions Measurements Below 1000MHz

   - RBW = 120 kHz
   - VBW = 300 kHz
   - Detector = Peak
   - Trace mode = max hold

   (2) Procedure for Peak Unwanted Emissions Measurements Above 1000 MHz

   - RBW = 1 MHz
   - VBW ≥ 3 MHz
   - Detector = Peak
   - Sweep time = auto
   - Trace mode = max hold

   (3) Procedures for Average Unwanted Emissions Measurements Above 1000MHz

   - RBW = 1 MHz
   - VBW = 10 Hz, when duty cycle is no less than 98 percent.
   - VBW ≥ 1/T, when duty cycle is less than 98 percent where T is the minimum transmission duration over which the transmitter is on and is transmitting at its maximum power control level for the tested mode of operation.

Antenna	Band	Duty Cycle(%)	T(us)	1/T(kHz)	VBW Setting
1	802.11a	87.82	1370.00	0.73	1kHz
1	802.11n HT20	86.49	1280.00	0.78	1kHz
1	802.11n HT40	71.01	490.00	2.04	3kHz

2. The EUT was placed on a turntable with 0.8 meter for frequency below 1GHz and 1.5 meter for frequency above 1GHz respectively above ground.
3. The EUT was set 3 meters from the interference receiving antenna which was mounted on the top of a variable height antenna tower.
4. The antenna is a broadband antenna and its height is adjusted between one meter and four meters above ground to find the maximum value of the field strength for both horizontal polarization and vertical polarization of the antenna.

5. For each suspected emission, the EUT was arranged to its worst case and then adjust the antenna tower (from 1 m to 4 m) and turntable (from 0 degree to 360 degrees) to find the maximum reading.
6. For testing below 1GHz, if the emission level of the EUT in peak mode was 3 dB lower than the limit specified, then peak values of EUT will be reported, otherwise, the emissions will be repeated one by one using the CISPR quasi-peak method and reported.
7. For testing above 1GHz, the emission level of the EUT in peak mode was 20dB lower than average limit (that means the emission level in average mode also complies with the limit in average mode), then peak values of EUT will be reported, otherwise, the emissions will be measured in average mode again and reported.

3.4.4 Test Setup

For radiated emissions below 30MHz

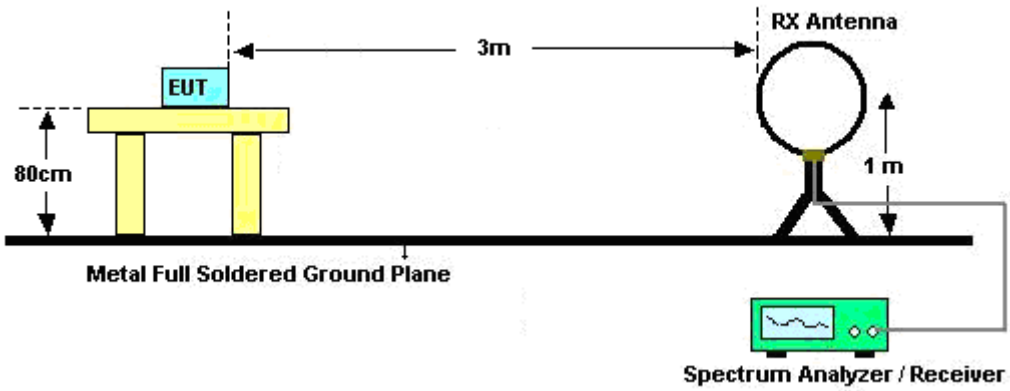

For radiated emissions from 30MHz to 1GHz

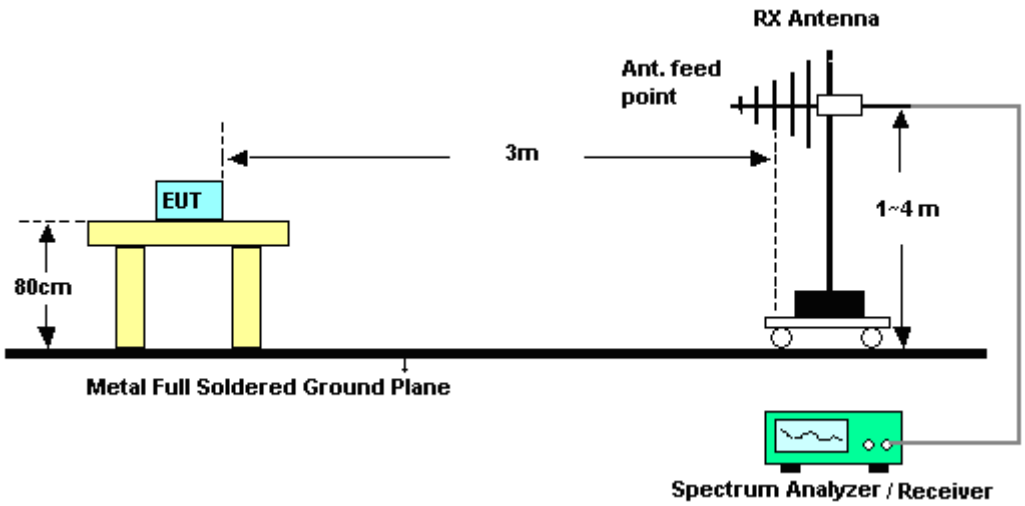

For radiated emissions above 1GHz

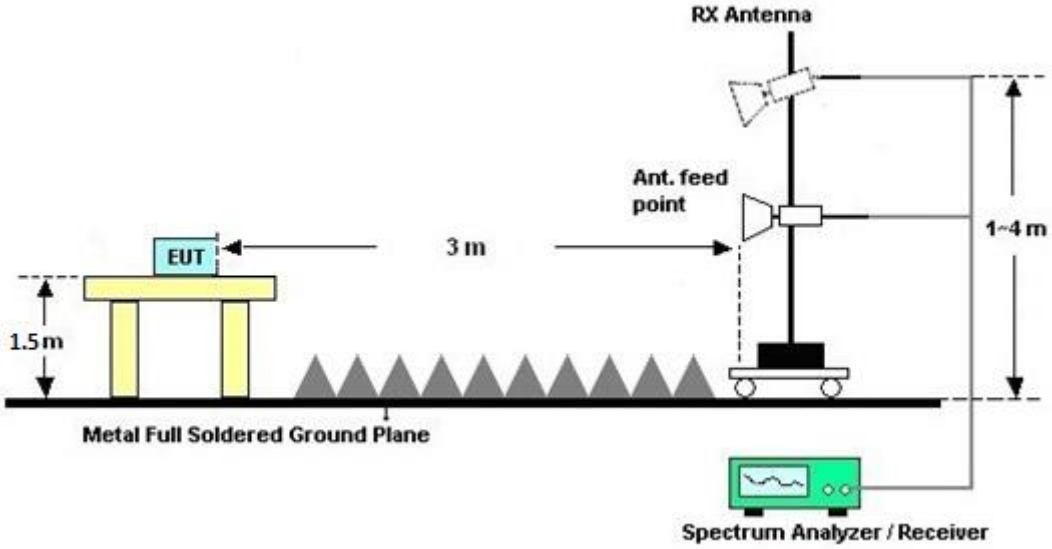

3.4.5 Test Results of Radiated Emissions (9 kHz ~ 30 MHz)

The low frequency, which started from 9 kHz to 30MHz, was pre-scanned and the result which was 20dB lower than the limit line per 15.31(o) was not reported.

3.4.6 Test Result of Radiated Band Edges

Please refer to Appendix A.

3.4.7 Test Result of Unwanted Radiated Emission (30MHz ~ 10th Harmonic)

Please refer to Appendix A.

3.5 AC Conducted Emission Measurement

3.5.1 Limit of AC Conducted Emission

For equipment that is designed to be connected to the public utility (AC) power line, the radio frequency voltage that is conducted back onto the AC power line on any frequency or frequencies within the band 150 kHz to 30 MHz shall not exceed the limits in the following table.

Frequency of emission (MHz)	Conducted limit (dBμV)	
	Quasi-peak	Average
0.15-0.5	66 to 56*	56 to 46*
0.5-5	56	46
5-30	60	50

*Decreases with the logarithm of the frequency.

3.5.2 Measuring Instruments

The measuring equipment is listed in the section 4 of this test report.

3.5.3 Test Procedures

1. The EUT was placed 0.4 meter from the conducting wall of the shielding room was kept at least 80 centimeters from any other grounded conducting surface.
2. Connect EUT to the power mains through a line impedance stabilization network (LISN).
3. All the support units are connecting to the other LISN.
4. The LISN provides 50 ohm coupling impedance for the measuring instrument.
5. The FCC states that a 50 ohm, 50 microhenry LISN should be used.
6. Both sides of AC line were checked for maximum conducted interference.
7. The frequency range from 150 kHz to 30 MHz was searched.
8. Set the test-receiver system to Peak Detect Function and specified bandwidth with Maximum Hold Mode.

3.5.4 Test Setup

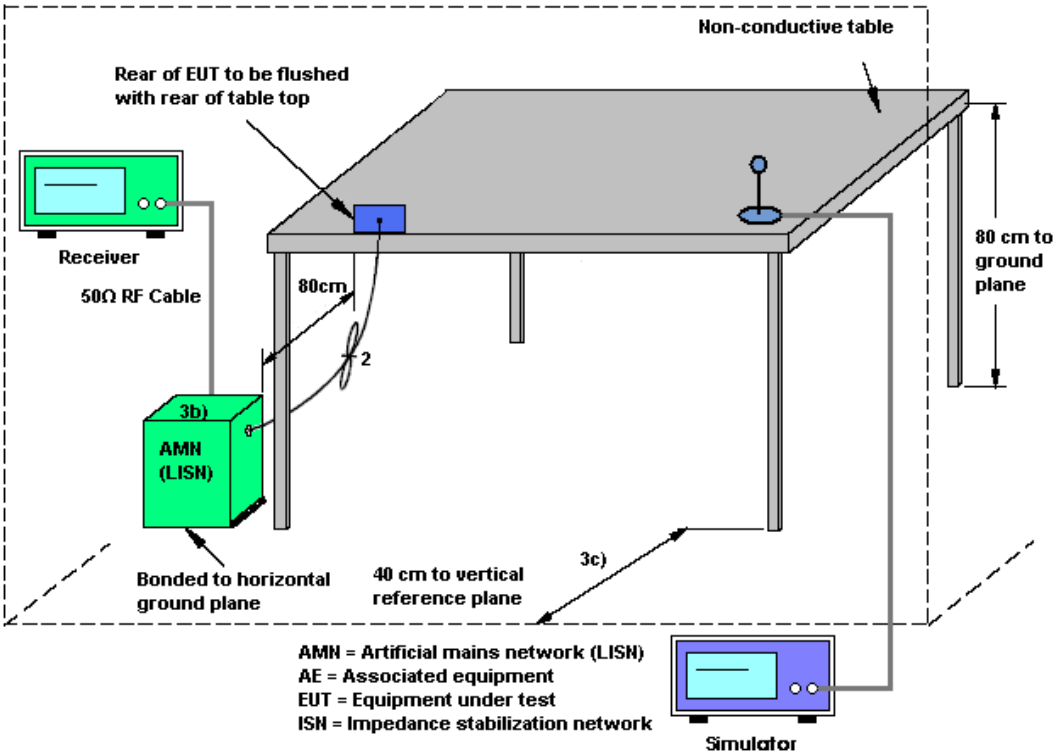

3.5.5 Test Result of AC Conducted Emission

Test Mode :	Mode 2	**Temperature :**	21~23℃
Test Engineer :	Eric Jeng	**Relative Humidity :**	59~61%
Test Voltage :	120Vac / 60Hz	**Phase :**	Line
Function Type :	GSM850 Idle + Bluetooth Link + WLAN (5GHz) Link + USB Cable (Charging from Adapter 2) + Earphone + MP3		

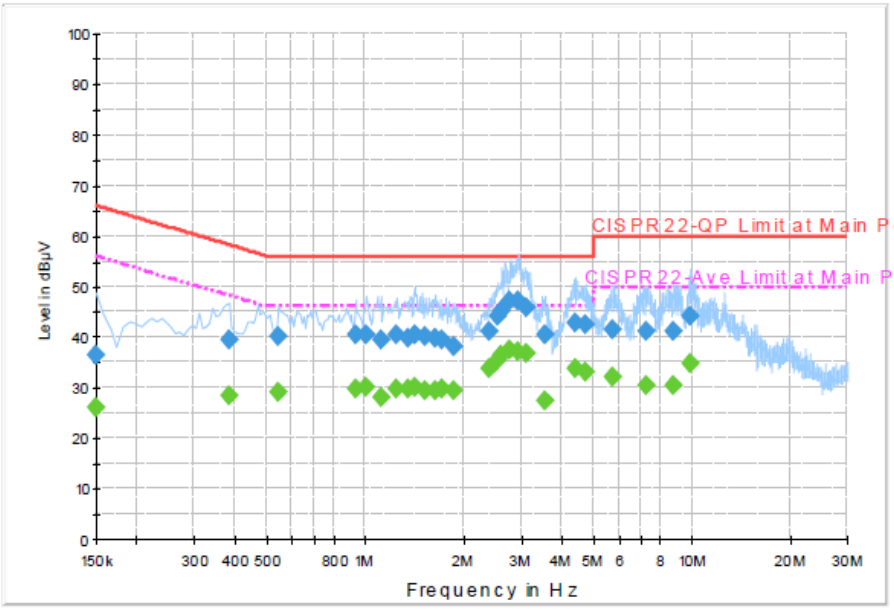

Final Result : QuasiPeak

Frequency (MHz)	QuasiPeak (dBµV)	Filter	Line	Corr. (dB)	Margin (dB)	Limit (dBµV)
0.150000	36.6	Off	L1	19.5	29.4	66.0
0.382000	39.5	Off	L1	19.5	18.7	58.2
0.542000	40.2	Off	L1	19.4	15.8	56.0
0.934000	40.6	Off	L1	19.6	15.4	56.0
1.006000	40.3	Off	L1	19.5	15.7	56.0
1.118000	39.4	Off	L1	19.5	16.6	56.0
1.254000	40.5	Off	L1	19.6	15.5	56.0
1.350000	39.9	Off	L1	19.6	16.1	56.0
1.422000	40.3	Off	L1	19.5	15.7	56.0
1.534000	40.2	Off	L1	19.5	15.8	56.0
1.638000	39.9	Off	L1	19.5	16.1	56.0
1.726000	39.3	Off	L1	19.6	16.7	56.0
1.862000	38.0	Off	L1	19.5	18.0	56.0
2.414000	41.1	Off	L1	19.7	14.9	56.0
2.550000	44.0	Off	L1	19.7	12.0	56.0
2.614000	45.3	Off	L1	19.7	10.7	56.0
2.766000	47.2	Off	L1	19.7	8.8	56.0
2.958000	47.3	Off	L1	19.7	8.7	56.0

Test Mode :	Mode 2	**Temperature :**	21~23℃
Test Engineer :	Eric Jeng	**Relative Humidity :**	59~61%
Test Voltage :	120Vac / 60Hz	**Phase :**	Line
Function Type :	GSM850 Idle + Bluetooth Link + WLAN (5GHz) Link + USB Cable (Charging from Adapter 2) + Earphone + MP3		

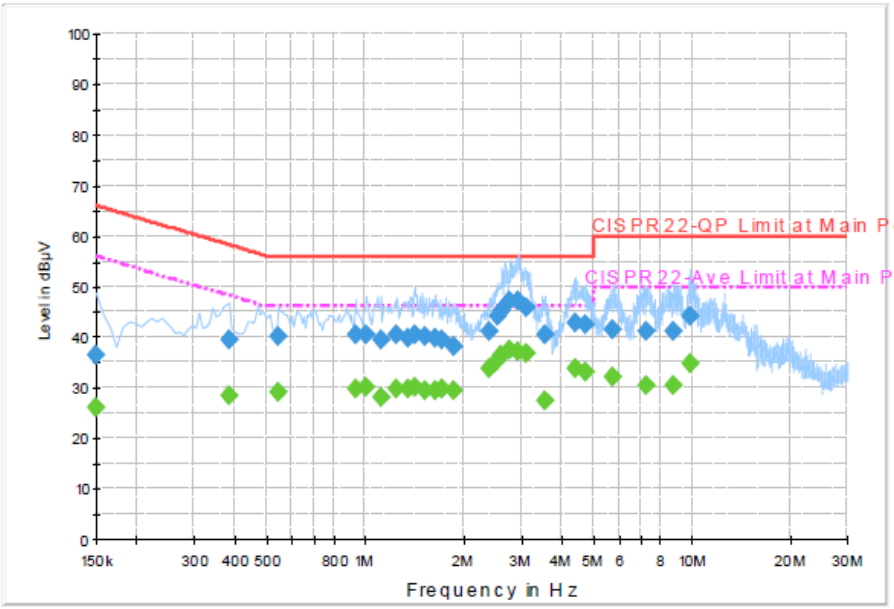

Final Result : QuasiPeak

Frequency (MHz)	QuasiPeak (dBµV)	Filter	Line	Corr. (dB)	Margin (dB)	Limit (dBµV)
3.110000	45.8	Off	L1	19.7	10.2	56.0
3.542000	40.4	Off	L1	19.7	15.6	56.0
4.414000	42.7	Off	L1	19.7	13.3	56.0
4.766000	42.4	Off	L1	19.8	13.6	56.0
5.742000	41.6	Off	L1	19.7	18.4	60.0
7.254000	41.1	Off	L1	19.8	19.0	60.0
8.822000	41.2	Off	L1	19.8	18.9	60.0
9.910000	44.0	Off	L1	19.9	16.0	60.0

Test Mode :	Mode 2	**Temperature :**	21~23℃
Test Engineer :	Eric Jeng	**Relative Humidity :**	59~61%
Test Voltage :	120Vac / 60Hz	**Phase :**	Line
Function Type :	GSM850 Idle + Bluetooth Link + WLAN (5GHz) Link + USB Cable (Charging from Adapter 2) + Earphone + MP3		

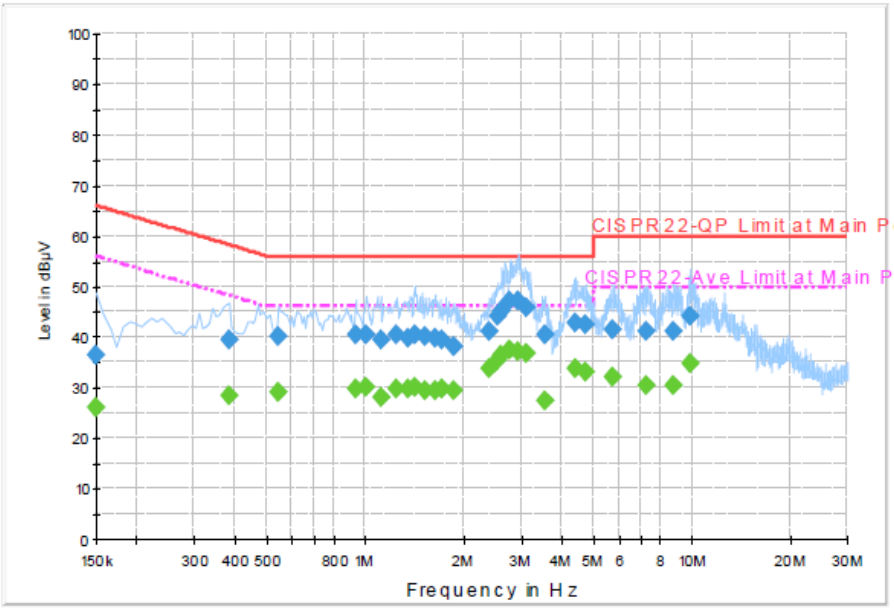

Final Result : Average

Frequency (MHz)	Average (dBµV)	Filter	Line	Corr. (dB)	Margin (dB)	Limit (dBµV)
0.150000	26.1	Off	L1	19.5	29.9	56.0
0.382000	28.3	Off	L1	19.5	19.9	48.2
0.542000	28.9	Off	L1	19.4	17.1	46.0
0.934000	29.6	Off	L1	19.6	16.4	46.0
1.006000	30.2	Off	L1	19.5	15.8	46.0
1.118000	28.1	Off	L1	19.5	17.9	46.0
1.254000	29.7	Off	L1	19.6	16.3	46.0
1.350000	29.7	Off	L1	19.6	16.3	46.0
1.422000	30.0	Off	L1	19.5	16.0	46.0
1.534000	29.6	Off	L1	19.5	16.4	46.0
1.638000	29.6	Off	L1	19.5	16.4	46.0
1.726000	29.9	Off	L1	19.6	16.1	46.0
1.862000	29.4	Off	L1	19.5	16.6	46.0
2.414000	33.8	Off	L1	19.7	12.2	46.0
2.550000	35.6	Off	L1	19.7	10.4	46.0
2.614000	36.6	Off	L1	19.7	9.4	46.0
2.766000	37.5	Off	L1	19.7	8.5	46.0
2.958000	37.0	Off	L1	19.7	9.0	46.0

Test Mode :	Mode 2	**Temperature :**	21~23℃
Test Engineer :	Eric Jeng	**Relative Humidity :**	59~61%
Test Voltage :	120Vac / 60Hz	**Phase :**	Line
Function Type :	GSM850 Idle + Bluetooth Link + WLAN (5GHz) Link + USB Cable (Charging from Adapter 2) + Earphone + MP3		

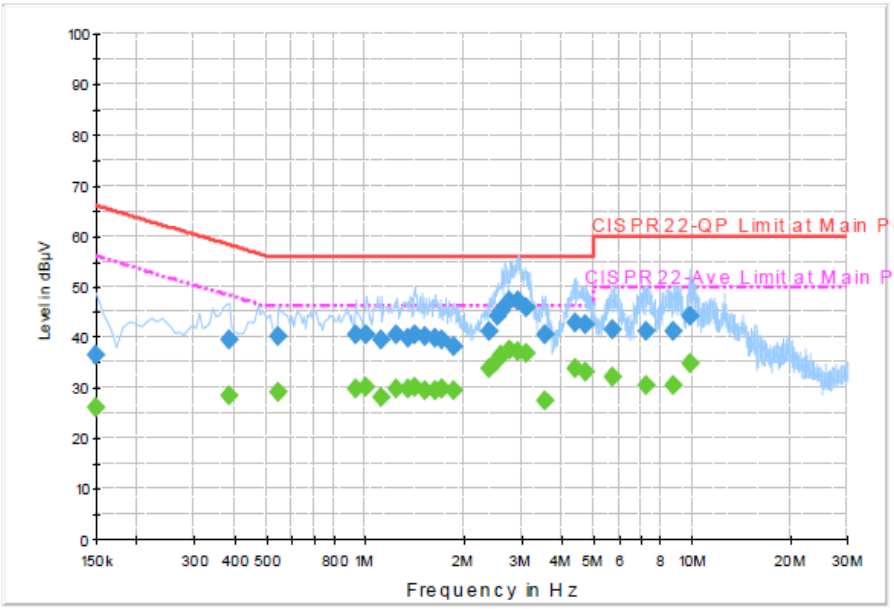

Final Result : Average

Frequency (MHz)	Average (dBµV)	Filter	Line	Corr. (dB)	Margin (dB)	Limit (dBµV)
3.110000	36.9	Off	L1	19.7	9.1	46.0
3.542000	27.5	Off	L1	19.7	18.5	46.0
4.414000	33.7	Off	L1	19.7	12.3	46.0
4.766000	33.1	Off	L1	19.8	12.9	46.0
5.742000	32.3	Off	L1	19.7	17.7	50.0
7.254000	30.5	Off	L1	19.8	19.5	50.0
8.822000	30.5	Off	L1	19.8	19.5	50.0
9.910000	34.7	Off	L1	19.9	15.3	50.0

Test Mode :	Mode 2	**Temperature :**	21~23℃
Test Engineer :	Eric Jeng	**Relative Humidity :**	59~61%
Test Voltage :	120Vac / 60Hz	**Phase :**	Neutral
Function Type :	GSM850 Idle + Bluetooth Link + WLAN (5GHz) Link + USB Cable (Charging from Adapter 2) + Earphone + MP3		

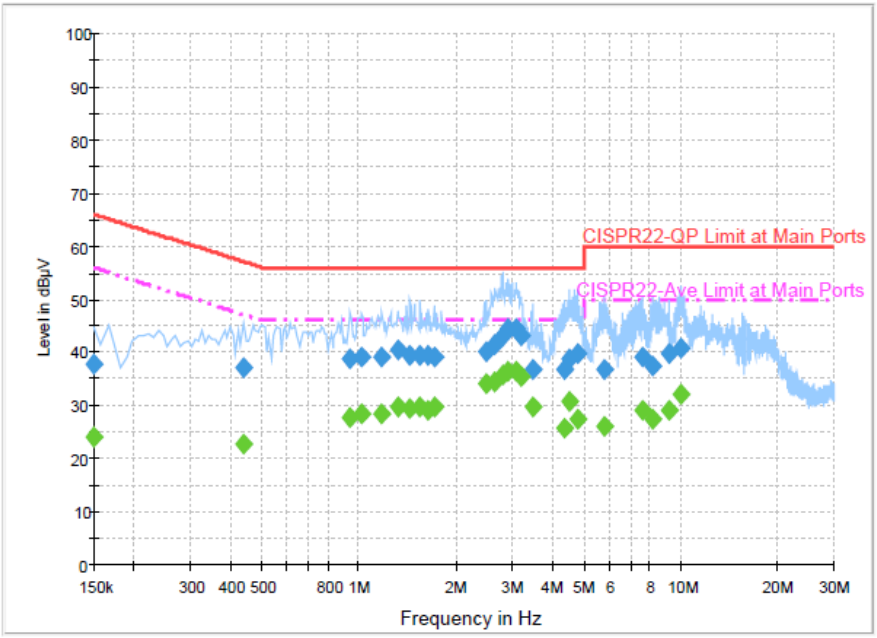

Final Result : QuasiPeak

Frequency (MHz)	QuasiPeak (dBµV)	Filter	Line	Corr. (dB)	Margin (dB)	Limit (dBµV)
0.150000	37.8	Off	N	19.5	28.2	66.0
0.438000	37.2	Off	N	19.5	19.9	57.1
0.942000	38.9	Off	N	19.6	17.1	56.0
1.022000	39.0	Off	N	19.5	17.0	56.0
1.182000	39.2	Off	N	19.6	16.8	56.0
1.318000	40.3	Off	N	19.6	15.7	56.0
1.446000	39.6	Off	N	19.5	16.4	56.0
1.550000	39.3	Off	N	19.5	16.7	56.0
1.646000	39.6	Off	N	19.6	16.4	56.0
1.718000	39.2	Off	N	19.6	16.8	56.0
2.494000	40.3	Off	N	19.7	15.7	56.0
2.638000	41.6	Off	N	19.7	14.4	56.0
2.798000	43.3	Off	N	19.8	12.7	56.0
2.918000	44.4	Off	N	19.7	11.6	56.0

Test Mode :	Mode 2	**Temperature :**	21~23℃
Test Engineer :	Eric Jeng	**Relative Humidity :**	59~61%
Test Voltage :	120Vac / 60Hz	**Phase :**	Neutral
Function Type :	GSM850 Idle + Bluetooth Link + WLAN (5GHz) Link + USB Cable (Charging from Adapter 2) + Earphone + MP3		

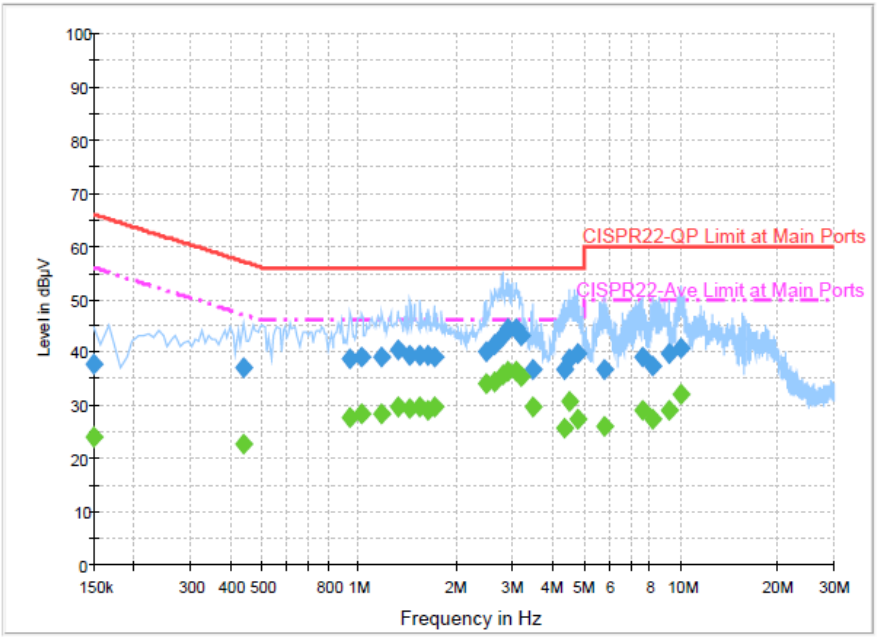

Final Result : QuasiPeak

Frequency (MHz)	QuasiPeak (dBµV)	Filter	Line	Corr. (dB)	Margin (dB)	Limit (dBµV)
3.094000	44.4	Off	N	19.7	11.6	56.0
3.190000	43.1	Off	N	19.7	12.9	56.0
3.470000	36.8	Off	N	19.7	19.2	56.0
4.342000	36.8	Off	N	19.7	19.2	56.0
4.526000	38.9	Off	N	19.7	17.1	56.0
4.798000	39.8	Off	N	19.7	16.2	56.0
5.798000	36.7	Off	N	19.7	23.3	60.0
7.614000	39.2	Off	N	19.7	20.8	60.0
8.198000	37.6	Off	N	19.9	22.4	60.0
9.230000	39.7	Off	N	19.8	20.3	60.0
10.046000	41.0	Off	N	19.9	19.0	60.0

Test Mode :	Mode 2	**Temperature :**	21~23℃
Test Engineer :	Eric Jeng	**Relative Humidity :**	59~61%
Test Voltage :	120Vac / 60Hz	**Phase :**	Neutral
Function Type :	GSM850 Idle + Bluetooth Link + WLAN (5GHz) Link + USB Cable (Charging from Adapter 2) + Earphone + MP3		

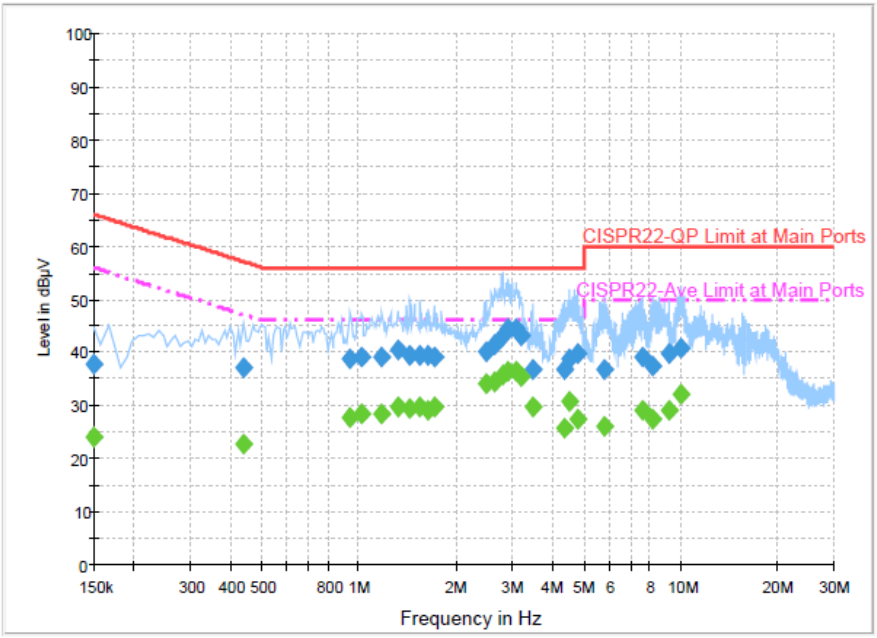

Final Result : Average

Frequency (MHz)	Average (dBµV)	Filter	Line	Corr. (dB)	Margin (dB)	Limit (dBµV)
0.150000	24.0	Off	N	19.5	32.0	56.0
0.438000	22.7	Off	N	19.5	24.4	47.1
0.942000	27.8	Off	N	19.6	18.2	46.0
1.022000	28.3	Off	N	19.5	17.7	46.0
1.182000	28.3	Off	N	19.6	17.7	46.0
1.318000	29.7	Off	N	19.6	16.3	46.0
1.446000	29.4	Off	N	19.5	16.6	46.0
1.550000	29.8	Off	N	19.5	16.2	46.0
1.646000	29.0	Off	N	19.6	17.0	46.0
1.718000	29.8	Off	N	19.6	16.2	46.0
2.494000	34.1	Off	N	19.7	11.9	46.0
2.638000	34.4	Off	N	19.7	11.6	46.0
2.798000	35.6	Off	N	19.8	10.4	46.0
2.918000	36.3	Off	N	19.7	9.7	46.0

Test Mode :	Mode 2	**Temperature :**	21~23℃
Test Engineer :	Eric Jeng	**Relative Humidity :**	59~61%
Test Voltage :	120Vac / 60Hz	**Phase :**	Neutral
Function Type :	GSM850 Idle + Bluetooth Link + WLAN (5GHz) Link + USB Cable (Charging from Adapter 2) + Earphone + MP3		

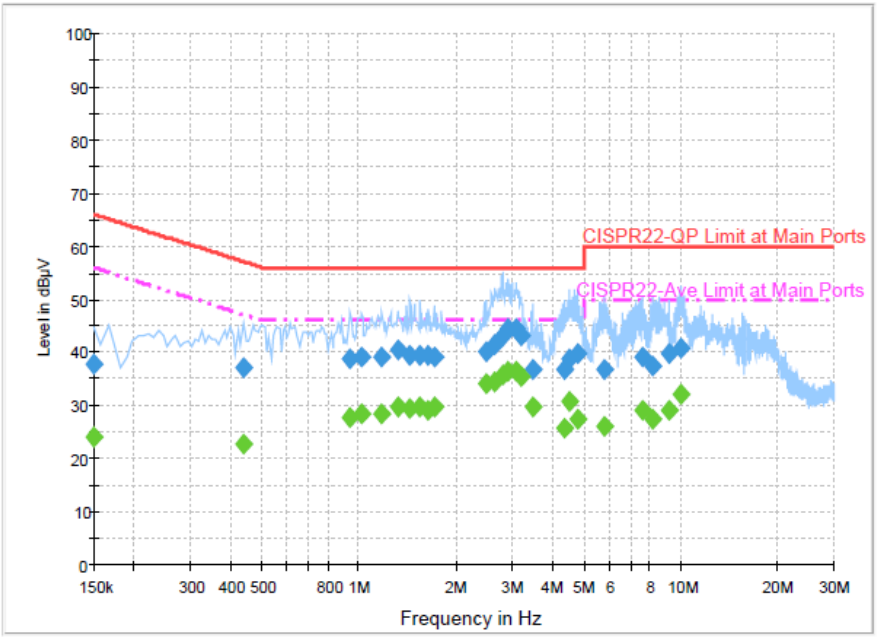

Final Result : Average

Frequency (MHz)	Average (dBµV)	Filter	Line	Corr. (dB)	Margin (dB)	Limit (dBµV)
3.094000	36.5	Off	N	19.7	9.5	46.0
3.190000	35.4	Off	N	19.7	10.6	46.0
3.470000	29.7	Off	N	19.7	16.3	46.0
4.342000	25.8	Off	N	19.7	20.2	46.0
4.526000	30.6	Off	N	19.7	15.4	46.0
4.798000	27.5	Off	N	19.7	18.5	46.0
5.798000	26.0	Off	N	19.7	24.0	50.0
7.614000	29.0	Off	N	19.7	21.0	50.0
8.198000	27.6	Off	N	19.9	22.4	50.0
9.230000	28.9	Off	N	19.8	21.1	50.0
10.046000	32.2	Off	N	19.9	17.8	50.0

3.6 Frequency Stability Measurement

3.6.1 Limit of Frequency Stability

Manufacturers of U-NII devices are responsible for ensuring frequency stability such that an emission is maintained within the band of operation under all conditions of normal operation as specified in the user's manual.

3.6.2 Measuring Instruments

The measuring equipment is listed in the section 4 of this test report.

3.6.3 Test Procedures

1. To ensure emission at the band edge is maintained within the authorized band, those values shall be measured by radiation emissions at upper and lower frequency points, and finally compensated by frequency deviation as procedures below.
2. The EUT was operated at the maximum output power, and connected to the spectrum analyzer, which is set to maximum hold function and peak detector. The peak value of the power envelope was measured and noted. The upper and lower frequency points were respectively measured relatively 10dB lower than the measured peak value.
3. The frequency deviation was calculated by adding the upper frequency point and the lower frequency point divided by two. Those detailed values of frequency deviation are provided in table below.

3.6.4 Test Setup

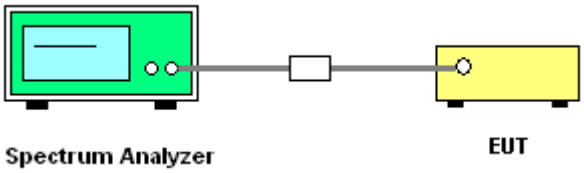

3.6.5 Test Result of Frequency Stability

Please refer to Appendix A.

3.7 Automatically Discontinue Transmission

3.7.1 Limit of Automatically Discontinue Transmission

The device shall automatically discontinue transmission in case of either absence of information to transmit or operational failure. These provisions are not intended to preclude the transmission of control or signaling information or the use of repetitive codes used by certain digital technologies to complete frame or burst intervals. Applicants shall include in their application for equipment authorization to describe how this requirement is met.

3.7.2 Measuring Instruments

The measuring equipment is listed in the section 4 of this test report.

3.7.3 Test Result of Automatically Discontinue Transmission

While the EUT is not transmitting any information, the EUT can automatically discontinue transmission and become standby mode for power saving. The EUT can detect the controlling signal of ACK message transmitting from remote device and verify whether it shall resend or discontinue transmission.

3.8 Antenna Requirements

3.8.1 Standard Applicable

According to FCC 47 CFR Section 15.407(a)(1)(2) ,if transmitting antenna directional gain is greater than 6 dBi, both the peak transmit power and the peak power spectral density shall be reduced by the amount in dB that the directional gain of the antenna exceeds 6 dBi.

3.8.2 Antenna Anti-Replacement Construction

An embedded-in antenna design is used.

3.8.3 Antenna Gain

The antenna peak gain of EUT is less than 6 dBi. Therefore, it is not necessary to reduce maximum peak output power limit.

4 List of Measuring Equipment

Instrument	Manufacturer	Model No.	Serial No.	Characteristics	Calibration Date	Test Date	Due Date	Remark
Power Meter	Anritsu	ML2495A	1036004	300MHz~40GHz	Aug. 09, 2014	May 10, 2015~ Jun. 15, 2015	Aug. 08, 2015	Conducted (TH02-HY)
Power Sensor	Anritsu	MA2411B	1027253	300MHz~40GHz	Aug. 11, 2014	May 10, 2015~ Jun. 15, 2015	Aug. 10, 2015	Conducted (TH02-HY)
Thermal Chamber	Ten Billion	TTH-D3SP	TBN-930701	N/A	Jul. 16, 2014	May 10, 2015~ Jun. 15, 2015	Jul. 15, 2015	Conducted (TH02-HY)
EMI Test Receiver	Rohde & Schwarz	ESCI 7	100724	9kHz~7GHz	Aug. 30, 2014	May 10, 2015~ Jun. 15, 2015	Aug. 29, 2015	Conducted (TH02-HY)
Bilog Antenna	Schaffner	CBL6111C	2726	30MHz ~ 1GHz	Sep. 27, 2014	Jun. 05, 2015~ Jun. 13, 2015	Sep. 26, 2015	Radiation (03CH07-HY)
Double Ridge Horn Antenna	ESCO	3117	00075962	1GHz ~ 18GHz	Aug. 19, 2014	Jun. 05, 2015~ Jun. 13, 2015	Aug. 18, 2015	Radiation (03CH07-HY)
EMI Test Receiver	Rohde & Schwarz	ESCI 7	100724	9kHz~7GHz	Aug. 30, 2014	Jun. 05, 2015~ Jun. 13, 2015	Aug. 29, 2015	Radiation (03CH07-HY)
Horn Antenna	SCHWARZBECK	BBHA 9120D	9120D-1328	1GHz ~ 18GHz	Nov. 05, 2014	Jun. 05, 2015~ Jun. 13, 2015	Nov. 04, 2015	Radiation (03CH07-HY)
Horn Antenna	SCHWARZBECK	BBHA 9170	BBHA9170584	18GHz- 40GHz	Nov. 03, 2014	Jun. 05, 2015~ Jun. 13, 2015	Nov. 02, 2015	Radiation (03CH07-HY)
Preamplifier	MITEQ	AMF-7D-0010 1800-30-10P	1590075	1GHz ~ 18GHz	Apr. 20, 2015	Jun. 05, 2015~ Jun. 13, 2015	Apr. 19, 2016	Radiation (03CH07-HY)
Preamplifier	COM-POWER	PA-103A	161241	10MHz-1000MHz	Mar. 12, 2015	Jun. 05, 2015~ Jun. 13, 2015	Mar. 11, 2016	Radiation (03CH07-HY)
Preamplifier	Agilent	8449B	3008A02362	1GHz~ 26.5GHz	Oct. 21, 2014	Jun. 05, 2015~ Jun. 13, 2015	Oct. 20, 2015	Radiation (03CH07-HY)
Signal Analyzer	Rohde & Schwarz	FSV 30	101749	10Hz~30GHz	Mar. 10, 2015	Jun. 05, 2015~ Jun. 13, 2015	Mar. 09, 2016	Radiation (03CH07-HY)
Antenna Mast	Max-Full	MFA520BS	N/A	1m~4m	N/A	Jun. 05, 2015~ Jun. 13, 2015	N/A	Radiation (03CH07-HY)
Turn Table	ChainTek	Chaintek 3000	N/A	0~360 degree	N/A	Jun. 05, 2015~ Jun. 13, 2015	N/A	Radiation (03CH07-HY)
Preamplifier	MITEQ	JS44-18004000-33-8P	1840917	18GHz ~ 40GHz	Jun. 02, 2015	Jun. 05, 2015~ Jun. 13, 2015	Jun. 01, 2016	Radiation (03CH07-HY)
Signal Analyzer	Rohde & Schwarz	FSV40	101397	10Hz~40GHz	Sep. 17, 2014	Jun. 05, 2015~ Jun. 13, 2015	Sep. 16, 2015	Radiation (03CH07-HY)
Loop Antenna	Rohde & Schwarz	HFH2-Z2	100315	9 kHz~30 MHz	Jul. 28, 2014	Jun. 05, 2015~ Jun. 13, 2015	Jul. 27, 2015	Radiation (03CH07-HY)
EMI Test Receiver	Rohde & Schwarz	ESCS 30	100356	9kHz – 2.75GHz	Dec. 01, 2014	May 16, 2015~ Jun. 09, 2015	Nov. 30, 2015	Conduction (CO05-HY)
LISN	Rohde & Schwarz	ENV216	100080	9kHz~30MHz	Dec. 02, 2014	May 16, 2015~ Jun. 09, 2015	Dec. 01, 2015	Conduction (CO05-HY)
AC Power Source	ChainTek	APC-1000W	N/A	N/A	N/A	May 16, 2015~ Jun. 09, 2015	N/A	Conduction (CO05-HY)

5 Uncertainty of Evaluation

Uncertainty of Conducted Emission Measurement (150kHz ~ 30MHz)

Measuring Uncertainty for a Level of Confidence of 95% (U = 2Uc(y))	**2.26**

Uncertainty of Radiated Emission Measurement (30 MHz ~ 1000 MHz)

Measuring Uncertainty for a Level of Confidence of 95% (U = 2Uc(y))	**5.2**

Appendix A. Conducted Test Results

Report Number : FR550147F

Test Engineer:	Derek Hsu	Temperature:	21~25	°C
Test Date:	2015/05/10~2015/06/15	Relative Humidity:	51~54	%

Report Number : FR550147F

TEST RESULTS DATA
6dB and 99% OBW

Band IV							
Mod.	Data Rate	NTX	CH.	Freq. (MHz)	6 dB Bandwidth (MHz)	FCC 6dB Bandwidth Limit (MHz)	Pass/Fail
11a	6M bps	1	149	5745	16.36	0.5	Pass
11a	6Mbps	1	157	5785	16.36	0.5	Pass
11a	6Mbps	1	165	5825	16.32	0.5	Pass
HT20	MCS 0	1	149	5745	17.54	0.5	Pass
HT20	MCS 0	1	157	5785	17.52	0.5	Pass
HT20	MCS 0	1	165	5825	17.56	0.5	Pass
HT40	MCS 0	1	151	5755	35.36	0.5	Pass
HT40	MCS 0	1	159	5795	35.2	0.5	Pass

Report Number : FR550147F

TEST RESULTS DATA
Average Power Table

FCC Band IV										
Mod.	Data Rate	NTX	CH.	Freq. (MHz)	Duty Factor (dB)	Average Conducted Power (dBm)	FCC Conducted Power Limit (dBm)	DG (dBi)		Pass/Fail
11a	6M bps	1	149	5745	0.56	12.46	30.00	-4.20		Pass
11a	6Mbps	1	157	5785	0.56	17.73	30.00	-4.20		Pass
11a	6Mbps	1	165	5825	0.56	16.22	30.00	-4.20		Pass
HT20	MCS 0	1	149	5745	0.63	10.94	30.00	-4.20		Pass
HT20	MCS 0	1	157	5785	0.63	14.58	30.00	-4.20		Pass
HT20	MCS 0	1	165	5825	0.63	14.22	30.00	-4.20		Pass
HT40	MCS 0	1	151	5755	1.49	11.91	30.00	-4.20		Pass
HT40	MCS 0	1	159	5795	1.49	14.50	30.00	-4.20		Pass

Report Number : FR550147F

TEST RESULTS DATA
Power Spectral Density

Band IV										
Mod.	Data Rate	NTX	CH.	Freq. (MHz)	Duty Factor (dB)	10log (500kHz /RBW) Factor (dB)	Average Power Density (dBm/500kHz)	Average PSD Limit (dBm/500kHz)	DG (dBi)	Pass/Fail
11a	6M bps	1	149	5745	0.56	2.22	-1.44	30.00	-4.20	Pass
11a	6Mbps	1	157	5785	0.56	2.22	8.18	30.00	-4.20	Pass
11a	6Mbps	1	165	5825	0.56	2.22	2.79	30.00	-4.20	Pass
HT20	MCS 0	1	149	5745	0.63	2.22	-1.87	30.00	-4.20	Pass
HT20	MCS 0	1	157	5785	0.63	2.22	7.41	30.00	-4.20	Pass
HT20	MCS 0	1	165	5825	0.63	2.22	1.41	30.00	-4.20	Pass
HT40	MCS 0	1	151	5755	1.49	2.22	-5.05	30.00	-4.20	Pass
HT40	MCS 0	1	159	5795	1.49	2.22	-2.25	30.00	-4.20	Pass

Report Number : FR550147F

TEST RESULTS DATA
Frequency Stability

Band IV										
Mod.	Data Rate	NTX	CH.	Freq. (MHz)	Center Frequency (MHz)	Frequency Deviation (MHz)	Frequency Stablility (ppm)	Temperature (℃)	Voltage (V)	Note
11a	6M bps	1	149	5745	5744.950	-0.050	-8.70	20	3.5	
11a	6M bps	1	149	5745	5744.950	-0.050	-8.70	20	4.35	
11a	6M bps	1	149	5745	5744.950	-0.050	-8.70	20	3.9	
11a	6M bps	1	149	5745	5744.950	-0.050	-8.70	-30	3.9	
11a	6M bps	1	149	5745	5744.900	-0.100	-17.41	60	3.9	

Appendix B. Radiated Spurious Emission

Test Engineer :	Luke Chang, Nick Yu, Ken Wu, and James Chiu	Temperature :	21~23°C
		Relative Humidity :	60~63%

15E Band 4 5725~5850MHz

WIFI 802.11a (Band Edge @ 3m)(Standalone)

WIFI	Note	Frequency	Level	Over	Limit	Read	Antenna	Cable	Preamp	Ant	Table	Peak	Pol.
Ant.				Limit	Line	Level	Factor	Loss	Factor	Pos	Pos	Avg.	
1		(MHz)	(dBμV/m)	(dB)	(dBμV/m)	(dBμV)	(dB/m)	(dB)	(dB)	(cm)	(deg)	(P/A)	(H/V)
802.11a CH 149 5745MHz		5714.68	63.43	-10.57	74	50.1	35.22	12.26	34.15	267	6	P	H
		5725	77.06	-1.24	78.3	63.72	35.23	12.26	34.15	267	6	P	H
		5713.32	47.15	-6.85	54	33.82	35.22	12.26	34.15	267	6	A	H
	*	5745	103.28	-	-	89.88	35.24	12.33	34.17	267	6	P	H
	*	5745	93.42	-	-	80.02	35.24	12.33	34.17	267	6	A	H
													H
													H
													H
		5711	57.5	-16.5	74	44.17	35.22	12.26	34.15	200	8	P	V
		5724.52	70.68	-7.62	78.3	57.34	35.23	12.26	34.15	200	8	P	V
		5714.6	44.49	-9.51	54	31.16	35.22	12.26	34.15	200	8	A	V
	*	5745	96.4	-	-	82.98	35.26	12.33	34.17	200	8	P	V
	*	5745	86.43	-	-	73.01	35.26	12.33	34.17	200	8	A	V
													V
													V
													V

WIFI	Note	Frequency	Level	Over	Limit	Read	Antenna	Cable	Preamp	Ant	Table	Peak	Pol.
Ant.				Limit	Line	Level	Factor	Loss	Factor	Pos	Pos	Avg.	
1		(MHz)	(dBμV/m)	(dB)	(dBμV/m)	(dBμV)	(dB/m)	(dB)	(dB)	(cm)	(deg)	(P/A)	(H/V)
802.11a CH 157 5785MHz		5708.12	58.23	-15.77	74	44.9	35.22	12.26	34.15	100	341	P	H
		5723.64	65.12	-13.18	78.3	51.78	35.23	12.26	34.15	100	341	P	H
		5714.04	44.39	-9.61	54	31.06	35.22	12.26	34.15	100	341	A	H
	*	5787	108.07	-	-	94.62	35.28	12.4	34.23	100	341	P	H
	*	5787	97.59	-	-	84.14	35.28	12.4	34.23	100	341	A	H
		5854.16	58.82	-19.48	78.3	45.36	35.32	12.45	34.31	100	341	P	H
		5872.08	57.92	-16.08	74	44.45	35.33	12.49	34.35	100	341	P	H
		5861.68	44.28	-9.72	54	30.82	35.32	12.49	34.35	100	341	A	H
		5714.28	58.06	-15.94	74	44.73	35.22	12.26	34.15	100	110	P	V
		5723.88	56.94	-21.36	78.3	43.6	35.23	12.26	34.15	100	110	P	V
		5701.08	43.86	-10.14	54	30.5	35.22	12.26	34.12	100	110	A	V
	*	5784	100.79	-	-	87.35	35.27	12.4	34.23	100	110	P	V
	*	5784	90.56	-	-	77.12	35.27	12.4	34.23	100	110	A	V
		5850.56	56.61	-21.69	78.3	43.16	35.31	12.45	34.31	100	110	P	V
		5889.76	57.25	-16.75	74	43.81	35.34	12.49	34.39	100	110	P	V
		5861.52	44.1	-9.9	54	30.64	35.32	12.49	34.35	100	110	A	V

WIFI	Note	Frequency	Level	Over	Limit	Read	Antenna	Cable	Preamp	Ant	Table	Peak	Pol.
Ant.				Limit	Line	Level	Factor	Loss	Factor	Pos	Pos	Avg.	
1		(MHz)	(dBμV/m)	(dB)	(dBμV/m)	(dBμV)	(dB/m)	(dB)	(dB)	(cm)	(deg)	(P/A)	(H/V)
802.11a CH 165 5825MHz	*	5825	105.65	-	-	92.17	35.3	12.45	34.27	226	6	P	H
	*	5825	96.03	-	-	82.55	35.3	12.45	34.27	226	6	A	H
		5850.08	76.54	-1.76	78.3	63.09	35.31	12.45	34.31	226	6	P	H
		5860.4	70.74	-3.26	74	57.28	35.32	12.49	34.35	226	6	P	H
		5860.48	48.61	-5.39	54	35.15	35.32	12.49	34.35	226	6	A	H
													H
													H
													H
	*	5825	98.27	-	-	84.79	35.3	12.45	34.27	200	9	P	V
	*	5825	88.69	-	-	75.21	35.3	12.45	34.27	200	9	A	V
		5850.08	71.29	-7.01	78.3	57.84	35.31	12.45	34.31	200	9	P	V
		5863.04	60.45	-13.55	74	46.99	35.32	12.49	34.35	200	9	P	V
		5860.32	45.45	-8.55	54	31.99	35.32	12.49	34.35	200	9	A	V
													V
													V
													V
													V
Remark	1. No other spurious found. 2. All results are PASS against Peak and Average limit line.												

15E Band 4 5725~5850MHz

WIFI 802.11a (Harmonic @ 3m) (Standalone)

WIFI Ant.	Note	Frequency (MHz)	Level (dBμV/m)	Over Limit (dB)	Limit Line (dBμV/m)	Read Level (dBμV)	Antenna Factor (dB/m)	Cable Loss (dB)	Preamp Factor (dB)	Ant Pos (cm)	Table Pos (deg)	Peak Avg. (P/A)	Pol. (H/V)
802.11a CH 149 5745MHz		11490	45.58	-28.42	74	47.85	38.19	17.38	57.84	100	0	P	H
		17232	50.47	-23.53	74	43.42	42.21	21.38	56.54	100	0	P	H
													H
													H
		11490	44.59	-29.41	74	46.86	38.19	17.38	57.84	100	0	P	V
		17232	50.27	-23.73	74	43.22	42.21	21.38	56.54	100	0	P	V
													V
													V
802.11a CH 157 5785MHz		11570	44.39	-29.61	74	46.32	38.3	17.46	57.69	100	0	P	H
		17355	50	-24	74	43.04	42.12	21.45	56.61	100	0	P	H
													H
													H
		11570	44.87	-29.13	74	46.8	38.3	17.46	57.69	100	0	P	V
		17355	49.69	-24.31	74	42.73	42.12	21.45	56.61	100	0	P	V
													V
													V
802.11a CH 165 5825MHz		11650	44.22	-29.78	74	45.88	38.39	17.53	57.58	100	0	P	H
		17472	50.31	-23.69	74	43.43	42.03	21.53	56.68	100	0	P	H
													H
													H
		11650	44.59	-29.41	74	46.25	38.39	17.53	57.58	100	0	P	V
		17472	50.85	-23.15	74	43.97	42.03	21.53	56.68	100	0	P	V
													V
													V
Remark	1. No other spurious found. 2. All results are PASS against Peak and Average limit line.												

15E Band 4 5725~5850MHz

WIFI 802.11n HT20 (Band Edge @ 3m) (Standalone)

WIFI Ant.	Note	Frequency (MHz)	Level (dBμV/m)	Over Limit (dB)	Limit Line (dBμV/m)	Read Level (dBμV)	Antenna Factor (dB/m)	Cable Loss (dB)	Preamp Factor (dB)	Ant Pos (cm)	Table Pos (deg)	Peak Avg. (P/A)	Pol. (H/V)
802.11n HT20 CH 149 5745MHz 1		5713.08	60.78	-13.22	74	47.45	35.22	12.26	34.15	267	5	P	H
		5722.76	77.21	-1.09	78.3	63.87	35.23	12.26	34.15	267	5	P	H
		5714.92	46.08	-7.92	54	32.75	35.22	12.26	34.15	267	5	A	H
	*	5745	101.77	-	-	88.37	35.24	12.33	34.17	267	5	P	H
	*	5745	92.62	-	-	79.22	35.24	12.33	34.17	267	5	A	H
													H
													H
													H
		5712.68	57.53	-16.47	74	44.2	35.22	12.26	34.15	200	8	P	V
		5724.52	71.52	-6.78	78.3	58.18	35.23	12.26	34.15	200	8	P	V
		5714.44	44.76	-9.24	54	31.43	35.22	12.26	34.15	200	8	A	V
	*	5745	95.83	-	-	82.43	35.24	12.33	34.17	200	8	P	V
	*	5745	85.78	-	-	72.38	35.24	12.33	34.17	200	8	A	V
													V
													V
													V

WIFI	Note	Frequency	Level	Over	Limit	Read	Antenna	Cable	Preamp	Ant	Table	Peak	Pol.
Ant.				Limit	Line	Level	Factor	Loss	Factor	Pos	Pos	Avg.	
1		(MHz)	(dBμV/m)	(dB)	(dBμV/m)	(dBμV)	(dB/m)	(dB)	(dB)	(cm)	(deg)	(P/A)	(H/V)
802.11n HT20 CH 157 5785MHz		5702.84	57.37	-16.63	74	44.01	35.22	12.26	34.12	108	344	P	H
		5724.52	58.44	-19.86	78.3	45.1	35.23	12.26	34.15	108	344	P	H
		5714.2	44.19	-9.81	54	30.86	35.22	12.26	34.15	108	344	A	H
	*	5784	105.56	-	-	92.12	35.27	12.4	34.23	108	344	P	H
	*	5784	96.11	-	-	82.67	35.27	12.4	34.23	108	344	A	H
		5850.08	56.77	-21.53	78.3	43.32	35.31	12.45	34.31	108	344	P	H
		5874.8	57.2	-16.8	74	43.73	35.33	12.49	34.35	108	344	P	H
		5863.92	44.26	-9.74	54	30.8	35.32	12.49	34.35	108	344	A	H
		5714.92	56.9	-17.1	74	43.57	35.22	12.26	34.15	100	110	P	V
		5715.8	57.25	-21.05	78.3	43.92	35.22	12.26	34.15	100	110	P	V
		5707.72	43.84	-10.16	54	30.51	35.22	12.26	34.15	100	110	A	V
	*	5783	99.61	-	-	86.17	35.27	12.4	34.23	100	110	P	V
	*	5783	89.8	-	-	76.36	35.27	12.4	34.23	100	110	A	V
		5851.44	57.59	-20.71	78.3	44.14	35.31	12.45	34.31	100	110	P	V
		5868.08	57.09	-16.91	74	43.63	35.32	12.49	34.35	100	110	P	V
		5887.44	44.08	-9.92	54	30.65	35.33	12.49	34.39	100	110	A	V

WIFI	Note	Frequency	Level	Over	Limit	Read	Antenna	Cable	Preamp	Ant	Table	Peak	Pol.
Ant.				Limit	Line	Level	Factor	Loss	Factor	Pos	Pos	Avg.	
1		(MHz)	(dBμV/m)	(dB)	(dBμV/m)	(dBμV)	(dB/m)	(dB)	(dB)	(cm)	(deg)	(P/A)	(H/V)
802.11n HT20 CH 165 5825MHz	*	5825	105.13	-	-	91.65	35.3	12.45	34.27	226	4	P	H
	*	5825	95.71	-	-	82.23	35.3	12.45	34.27	226	4	A	H
		5851.36	74.45	-3.85	78.3	61	35.31	12.45	34.31	226	4	P	H
		5860.72	66.19	-7.81	74	52.73	35.32	12.49	34.35	226	4	P	H
		5860.16	47.49	-6.51	54	34.03	35.32	12.49	34.35	226	4	A	H
													H
													H
													H
	*	5825	97.65	-	-	84.17	35.3	12.45	34.27	200	27	P	V
	*	5825	88.3	-	-	74.82	35.3	12.45	34.27	200	27	A	V
		5850	66.77	-11.53	78.3	53.32	35.31	12.45	34.31	200	27	P	V
		5860.16	60.04	-13.96	74	46.58	35.32	12.49	34.35	200	27	P	V
		5860.72	45.3	-8.7	54	31.84	35.32	12.49	34.35	200	27	A	V
													V
													V
													V
Remark	1. No other spurious found. 2. All results are PASS against Peak and Average limit line.												

15E Band 4 5725~5850MHz

WIFI 802.11n HT20 (Harmonic @ 3m) (Standalone)

WIFI Ant.	Note	Frequency (MHz)	Level (dBμV/m)	Over Limit (dB)	Limit Line (dBμV/m)	Read Level (dBμV)	Antenna Factor (dB/m)	Cable Loss (dB)	Preamp Factor (dB)	Ant Pos (cm)	Table Pos (deg)	Peak Avg. (P/A)	Pol. (H/V)
802.11n HT20 CH 149 5745MHz		11490	44.43	-29.57	74	46.7	38.19	17.38	57.84	100	0	P	H
		17235	50.78	-23.22	74	43.73	42.21	21.38	56.54	100	0	P	H
													H
													H
		11490	44.81	-29.19	74	47.08	38.19	17.38	57.84	100	0	P	V
		17235	50.63	-23.37	74	43.58	42.21	21.38	56.54	100	0	P	V
													V
													V
802.11n HT20 CH 157 5785MHz		11570	43.69	-30.31	74	45.62	38.3	17.46	57.69	100	0	P	H
		17352	49.83	-24.17	74	42.87	42.12	21.45	56.61	100	0	P	H
													H
													H
		11570	43.75	-30.25	74	45.68	38.3	17.46	57.69	100	0	P	V
		17352	50.8	-23.2	74	43.84	42.12	21.45	56.61	100	0	P	V
													V
													V
802.11n HT20 CH 165 5825MHz		11650	44.66	-29.34	74	46.32	38.39	17.53	57.58	100	0	P	H
		17475	50.54	-23.46	74	43.66	42.03	21.53	56.68	100	0	P	H
													H
													H
		11650	45.34	-28.66	74	47	38.39	17.53	57.58	100	0	P	V
		17475	50	-24	74	43.12	42.03	21.53	56.68	100	0	P	V
													V
													V
Remark	1. No other spurious found. 2. All results are PASS against Peak and Average limit line.												

15E Band 4 5725~5850MHz

WIFI 802.11n HT40 (Band Edge @ 3m) (Standalone)

WIFI Ant.	Note	Frequency (MHz)	Level (dBμV/m)	Over Limit (dB)	Limit Line (dBμV/m)	Read Level (dBμV)	Antenna Factor (dB/m)	Cable Loss (dB)	Preamp Factor (dB)	Ant Pos (cm)	Table Pos (deg)	Peak Avg. (P/A)	Pol. (H/V)
802.11n HT40 CH 151 5755MHz		5714.92	69.6	-4.4	74	56.27	35.22	12.26	34.15	311	360	P	H
		5724.92	72.81	-5.49	78.3	59.47	35.23	12.26	34.15	311	360	P	H
		5714.76	52.11	-1.89	54	38.78	35.22	12.26	34.15	311	360	A	H
	*	5755	97.6	-	-	84.18	35.26	12.33	34.17	311	360	P	H
	*	5755	88.37	-	-	74.95	35.26	12.33	34.17	311	360	A	H
		5856.56	57.21	-21.09	78.3	43.75	35.32	12.45	34.31	311	360	P	H
		5879.68	57.34	-16.66	74	43.87	35.33	12.49	34.35	311	360	P	H
		5882.48	44.63	-9.37	54	31.16	35.33	12.49	34.35	311	360	A	H
		5715	66.65	-7.35	74	53.32	35.22	12.26	34.15	200	7	P	V
		5720.04	68.04	-10.26	78.3	54.7	35.23	12.26	34.15	200	7	P	V
		5714.84	48.22	-5.78	54	34.89	35.22	12.26	34.15	200	7	A	V
	*	5755	92.79	-	-	79.37	35.26	12.33	34.17	200	7	P	V
	*	5755	83.29	-	-	69.87	35.26	12.33	34.17	200	7	A	V
		5859.12	57.17	-21.13	78.3	43.75	35.32	12.45	34.35	200	7	P	V
		5866.64	57.52	-16.48	74	44.06	35.32	12.49	34.35	200	7	P	V
		5889.84	44.66	-9.34	54	31.22	35.34	12.49	34.39	200	7	A	V

WIFI	Note	Frequency	Level	Over	Limit	Read	Antenna	Cable	Preamp	Ant	Table	Peak	Pol.
Ant.				Limit	Line	Level	Factor	Loss	Factor	Pos	Pos	Avg.	
1		(MHz)	(dBμV/m)	(dB)	(dBμV/m)	(dBμV)	(dB/m)	(dB)	(dB)	(cm)	(deg)	(P/A)	(H/V)
802.11n HT40 CH 159 5795MHz		5714.28	59.48	-14.52	74	46.15	35.22	12.26	34.15	101	342	P	H
		5723.72	66.31	-11.99	78.3	52.97	35.23	12.26	34.15	101	342	P	H
		5714.76	45.98	-8.02	54	32.65	35.22	12.26	34.15	101	342	A	H
	*	5796	103.02	-	-	89.57	35.28	12.4	34.23	101	342	P	H
	*	5796	93.15	-	-	79.7	35.28	12.4	34.23	101	342	A	H
		5851.52	66.9	-11.4	78.3	53.45	35.31	12.45	34.31	101	342	P	H
		5860.48	64.66	-9.34	74	51.2	35.32	12.49	34.35	101	342	P	H
		5860.08	48.25	-5.75	54	34.79	35.32	12.49	34.35	101	342	A	H
		5701.4	57.12	-16.88	74	43.76	35.22	12.26	34.12	100	115	P	V
		5722.84	59.14	-19.16	78.3	45.8	35.23	12.26	34.15	100	115	P	V
		5713.24	44.61	-9.39	54	31.28	35.22	12.26	34.15	100	115	A	V
	*	5793	94.55	-	-	81.1	35.28	12.4	34.23	100	115	P	V
	*	5793	85.14	-	-	71.69	35.28	12.4	34.23	100	115	A	V
		5850.16	59.57	-18.73	78.3	46.12	35.31	12.45	34.31	100	115	P	V
		5862.4	58.12	-15.88	74	44.66	35.32	12.49	34.35	100	115	P	V
		5864.72	44.87	-9.13	54	31.41	35.32	12.49	34.35	100	115	A	V
Remark	1. No other spurious found. 2. All results are PASS against Peak and Average limit line.												

15E Band 4 5725~5850MHz

WIFI 802.11n HT40 (Harmonic @ 3m) (Standalone)

WIFI Ant.	Note	Frequency (MHz)	Level (dBμV/m)	Over Limit (dB)	Limit Line (dBμV/m)	Read Level (dBμV)	Antenna Factor (dB/m)	Cable Loss (dB)	Preamp Factor (dB)	Ant Pos (cm)	Table Pos (deg)	Peak Avg. (P/A)	Pol. (H/V)
802.11n HT40 CH 151 5755MHz		11510	44.28	-29.72	74	46.46	38.2	17.42	57.8	100	0	P	H
		17268	50.41	-23.59	74	43.38	42.19	21.4	56.56	100	0	P	H
													H
													H
		11510	44.22	-29.78	74	46.4	38.2	17.42	57.8	100	0	P	V
		17268	50.04	-23.96	74	43.01	42.19	21.4	56.56	100	0	P	V
													V
													V
802.11n HT40 CH 159 5795MHz		11590	43.71	-30.29	74	45.55	38.32	17.5	57.66	100	0	P	H
		17388	50.15	-23.85	74	43.21	42.09	21.48	56.63	100	0	P	H
													H
													H
		11590	44.17	-29.83	74	46.01	38.32	17.5	57.66	100	0	P	V
		17388	49.56	-24.44	74	42.62	42.09	21.48	56.63	100	0	P	V
													V
													V
Remark	1. No other spurious found. 2. All results are PASS against Peak and Average limit line.												

15E Emission below 1GHz

5GHz WIFI 802.11n HT20 (LF @ 3m) (Standalone)

WIFI Ant.	Note	Frequency (MHz)	Level (dBμV/m)	Over Limit (dB)	Limit Line (dBμV/m)	Read Level (dBμV)	Antenna Factor (dB/m)	Cable Loss (dB)	Preamp Factor (dB)	Ant Pos (cm)	Table Pos (deg)	Peak Avg. (P/A)	Pol. (H/V)
1													
5GHz 802.11n HT20 LF		88.86	23.77	-19.73	43.5	44.23	8.58	2.06	31.1	210	228	P	H
		99.93	23.21	-20.29	43.5	41.85	10.4	2.06	31.1	-	-	P	H
		131.52	22.84	-20.66	43.5	39.76	11.8	2.38	31.1	-	-	P	H
		501.6	20.62	-25.38	46	29.33	18.01	3.89	30.61	-	-	P	H
		598.2	21.68	-24.32	46	28.63	19.58	4.08	30.61	-	-	P	H
		809.6	24.69	-21.31	46	28.19	22.2	4.62	30.32	-	-	P	H
													H
													H
													H
													H
													H
													H
		36.21	28.96	-11.04	40	42.71	15.76	1.77	31.28	111	56	P	V
		40.26	26.98	-13.02	40	43.11	13.3	1.77	31.2	-	-	P	V
		89.13	23.18	-20.32	43.5	43.64	8.58	2.06	31.1	-	-	P	V
		682.9	24.65	-21.35	46	30.23	20.5	4.35	30.43	-	-	P	V
		834.8	26.26	-19.74	46	28.93	23	4.7	30.37	-	-	P	V
		992.3	27.8	-26.2	54	28.24	24.76	5.03	30.23	-	-	P	V
													V
													V
													V
													V
													V
													V
Remark	1. No other spurious found. 2. All results are PASS against limit line.												

15E Band 4 5725~5850MHz

WIFI 802.11n HT20 (Band Edge @ 3m) (with adapter1)

WIFI Ant. 1	Note	Frequency (MHz)	Level (dBμV/m)	Over Limit (dB)	Limit Line (dBμV/m)	Read Level (dBμV)	Antenna Factor (dB/m)	Cable Loss (dB)	Preamp Factor (dB)	Ant Pos (cm)	Table Pos (deg)	Peak Avg. (P/A)	Pol. (H/V)
802.11n HT20 CH 149 5745MHz		5713.24	62.54	-11.46	74	49.21	35.22	12.26	34.15	103	344	P	H
		5724.84	77.69	-0.61	78.3	64.35	35.23	12.26	34.15	103	344	P	H
		5714.76	46.8	-7.2	54	33.47	35.22	12.26	34.15	103	344	A	H
	*	5743	101.92	-	-	88.52	35.24	12.33	34.17	103	344	P	H
	*	5743	92.53	-	-	79.13	35.24	12.33	34.17	103	344	A	H
													H
													H
		5715	58.82	-15.18	74	45.49	35.22	12.26	34.15	100	99	P	V
		5724.84	71.3	-7	78.3	57.96	35.23	12.26	34.15	100	99	P	V
		5714.76	44.49	-9.51	54	31.16	35.22	12.26	34.15	100	99	A	V
	*	5743	94.64	-	-	81.24	35.24	12.33	34.17	100	99	P	V
	*	5743	85.15	-	-	71.75	35.24	12.33	34.17	100	99	A	V
													V
													V

15E Band 4 5725~5850MHz

WIFI 802.11n HT20 (Harmonic @ 3m) (with adapter1)

WIFI Ant. 1	Note	Frequency (MHz)	Level (dBμV/m)	Over Limit (dB)	Limit Line (dBμV/m)	Read Level (dBμV)	Antenna Factor (dB/m)	Cable Loss (dB)	Preamp Factor (dB)	Ant Pos (cm)	Table Pos (deg)	Peak Avg. (P/A)	Pol. (H/V)
802.11n HT20 CH 149 5745MHz		11490	44.43	-29.57	74	46.7	38.19	17.38	57.84	100	0	P	H
		17235	50.78	-23.22	74	43.73	42.21	21.38	56.54	100	0	P	H
													H
													H
		11490	44.81	-29.19	74	47.08	38.19	17.38	57.84	100	0	P	V
		17235	50.63	-23.37	74	43.58	42.21	21.38	56.54	100	0	P	V
													V
													V
Remark	1. No other spurious found. 2. All results are PASS against Peak and Average limit line.												

15E Emission below 1GHz

5GHz WIFI 802.11n HT20 (LF @ 3m) (with adapter1)

WIFI	Note	Frequency	Level	Over	Limit	Read	Antenna	Cable	Preamp	Ant	Table	Peak	Pol.
Ant.				Limit	Line	Level	Factor	Loss	Factor	Pos	Pos	Avg.	
1		(MHz)	(dBµV/m)	(dB)	(dBµV/m)	(dBµV)	(dB/m)	(dB)	(dB)	(cm)	(deg)	(P/A)	(H/V)
5GHz 802.11n HT20 LF		74.55	21.67	-18.33	40	44.01	6.8	2.06	31.2	-	-	P	H
		157.71	24.95	-18.55	43.5	42.94	10.58	2.61	31.18	-	-	P	H
		274.62	22.05	-23.95	46	36.99	12.85	3.16	30.95	-	-	P	H
		384	23.08	-22.92	46	35.28	15.26	3.52	30.98	-	-	P	H
		693.4	24.33	-21.67	46	29.85	20.54	4.35	30.41	-	-	P	H
		880.3	31.27	-14.73	46	34.05	22.9	4.66	30.34	122	78	P	H
													H
													H
													H
													H
													H
													H
		101.01	27.79	-15.71	43.5	46.1	10.42	2.38	31.11	101	125	P	V
		219.81	18.44	-27.56	46	37.45	9.3	2.69	31	-	-	P	V
		248.7	21.74	-24.26	46	37.58	12.2	2.96	31	-	-	P	V
		384	26.39	-19.61	46	38.59	15.26	3.52	30.98	-	-	P	V
		832.7	27.3	-18.7	46	30.04	22.92	4.7	30.36	-	-	P	V
		962.9	29.72	-24.28	54	30.4	24.73	4.94	30.35	-	-	P	V
													V
													V
													V
													V
													V
													V
Remark	1. No other spurious found. 2. All results are PASS against limit line.												

15E Band 4 5725~5850MHz

WIFI 802.11n HT20 (Band Edge @ 3m) (with adapter2)

WIFI Ant.	Note	Frequency (MHz)	Level (dBμV/m)	Over Limit (dB)	Limit Line (dBμV/m)	Read Level (dBμV)	Antenna Factor (dB/m)	Cable Loss (dB)	Preamp Factor (dB)	Ant Pos (cm)	Table Pos (deg)	Peak Avg. (P/A)	Pol. (H/V)
1													
802.11n HT20 CH 149 5745MHz		5714.6	62.98	-11.02	74	49.65	35.22	12.26	34.15	104	341	P	H
		5724.6	77.87	-0.43	78.3	64.53	35.23	12.26	34.15	104	341	P	H
		5715	46.61	-7.39	54	33.28	35.22	12.26	34.15	104	341	A	H
	*	5744	102.45	-	-	89.05	35.24	12.33	34.17	104	341	P	H
	*	5744	92.88	-	-	79.48	35.24	12.33	34.17	104	341	A	H
													H
													H
		5711.88	57.25	-16.75	74	43.92	35.22	12.26	34.15	109	111	P	V
		5723.96	69.42	-8.88	78.3	56.08	35.23	12.26	34.15	109	111	P	V
		5714.44	44.36	-9.64	54	31.03	35.22	12.26	34.15	109	111	A	V
	*	5746	94.65	-	-	81.25	35.24	12.33	34.17	109	111	P	V
	*	5746	84.75	-	-	71.35	35.24	12.33	34.17	109	111	A	V
													V
													V

15E Band 4 5725~5850MHz

WIFI 802.11n HT20 (Harmonic @ 3m) (with adapter2)

WIFI Ant.	Note	Frequency (MHz)	Level (dBμV/m)	Over Limit (dB)	Limit Line (dBμV/m)	Read Level (dBμV)	Antenna Factor (dB/m)	Cable Loss (dB)	Preamp Factor (dB)	Ant Pos (cm)	Table Pos (deg)	Peak Avg. (P/A)	Pol. (H/V)
1													
802.11n HT20 CH 149 5745MHz		11490	44.29	-29.71	74	46.56	38.19	17.38	57.84	100	0	P	H
		17235	51.29	-22.71	74	44.24	42.21	21.38	56.54	100	0	P	H
													H
													H
		11490	43.93	-30.07	74	46.2	38.19	17.38	57.84	100	0	P	V
		17235	50.29	-23.71	74	43.24	42.21	21.38	56.54	100	0	P	V
													V
													V
Remark	1. No other spurious found. 2. All results are PASS against Peak and Average limit line.												

15E Emission below 1GHz

5GHz WIFI 802.11n HT20 (LF @ 3m) (with adapter2)

WIFI	Note	Frequency	Level	Over	Limit	Read	Antenna	Cable	Preamp	Ant	Table	Peak	Pol.
Ant.				Limit	Line	Level	Factor	Loss	Factor	Pos	Pos	Avg.	
1		(MHz)	(dBµV/m)	(dB)	(dBµV/m)	(dBµV)	(dB/m)	(dB)	(dB)	(cm)	(deg)	(P/A)	(H/V)
5GHz 802.11n HT20 LF		74.28	25.39	-14.61	40	47.73	6.8	2.06	31.2	124	87	P	H
		165.27	24.87	-18.63	43.5	43.61	9.8	2.61	31.15	-	-	P	H
		246.27	22.33	-23.67	46	38.37	12	2.96	31	-	-	P	H
		445.6	22.89	-23.11	46	32.84	17.15	3.63	30.73	-	-	P	H
		676.6	27	-19	46	32.63	20.47	4.35	30.45	-	-	P	H
		849.5	28.72	-17.28	46	31.12	23.3	4.7	30.4	-	-	P	H
													H
													H
													H
													H
													H
													H
		91.29	24.29	-19.21	43.5	44.53	8.8	2.06	31.1	-	-	P	V
		181.2	18.76	-24.74	43.5	38.11	8.88	2.69	30.92	-	-	P	V
		267.06	18.53	-27.47	46	33.14	13.23	3.16	31	-	-	P	V
		442.8	22.33	-23.67	46	32.33	17.09	3.63	30.72	-	-	P	V
		724.2	26.75	-19.25	46	31.07	21.67	4.41	30.4	-	-	P	V
		912.5	30.27	-15.73	46	32.15	23.64	4.8	30.32	102	263	P	V
													V
													V
													V
													V
													V
													V
Remark	1. No other spurious found. 2. All results are PASS against limit line.												

Note symbol

*	**Fundamental Frequency** which can be ignored. However, the level of any unwanted emissions shall not exceed the level of the fundamental frequency per 15.209(c).
!	Test result is **over limit** line.
P/A	**P**eak or **A**verage
H/V	**H**orizontal or **V**ertical

A calculation example for radiated spurious emission is shown as below:

WIFI	Note	Frequency	Level	Over	Limit	Read	Antenna	Cable	Preamp	Ant	Table	Peak	Pol.
Ant.				Limit	Line	Level	Factor	Loss	Factor	Pos	Pos	Avg.	
1+2		(MHz)	(dBμV/m)	(dB)	(dBμV/m)	(dBμV)	(dB/m)	(dB)	(dB)	(cm)	(deg)	(P/A)	(H/V)
802.11b CH 01 2412MHz		2390	55.45	-18.55	74	54.51	32.22	4.58	35.86	103	308	P	H
		2390	43.54	-10.46	54	42.6	32.22	4.58	35.86	103	308	A	H

1. Level(dBμV/m) =

Antenna Factor(dB/m) + Cable Loss(dB) + Read Level(dBμV) - Preamp Factor(dB)

2. Over Limit(dB) = Level(dBμV/m) – Limit Line(dBμV/m)

For Peak Limit @ 2390MHz:

1. Level(dBμV/m)

= Antenna Factor(dB/m) + Cable Loss(dB) + Read Level(dBμV) - Preamp Factor(dB)

= 32.22(dB/m) + 4.58(dB) + 54.51(dBμV) – 35.86 (dB)

= 55.45 (dBμV/m)

2. Over Limit(dB)

= Level(dBμV/m) – Limit Line(dBμV/m)

= 55.45(dBμV/m) – 74(dBμV/m)

= -18.55(dB)

For Average Limit @ 2390MHz:

1. Level(dBμV/m)

= Antenna Factor(dB/m) + Cable Loss(dB) + Read Level(dBμV) - Preamp Factor(dB)

= 32.22(dB/m) + 4.58(dB) + 42.6(dBμV) – 35.86 (dB)

= 43.54 (dBμV/m)

2. Over Limit(dB)

= Level(dBμV/m) – Limit Line(dBμV/m)

= 43.54(dBμV/m) – 54(dBμV/m)

= -10.46(dB)

Both peak and average measured complies with the limit line, so test result is “PASS”.