System Check_Head_750MHz

DUT: D750V3-1078

Communication System: CW; Frequency: 750 MHz;Duty Cycle: 1:1
Medium: HSL_750_160523 Medium parameters used: f = 750 MHz; σ = 0.9 S/m; ε_r = 41.911; ρ = 1000 kg/m^3
Ambient Temperature：23.5 ℃； Liquid Temperature：22.5 ℃

DASY5 Configuration
- Probe: ES3DV3 - SN3270; ConvF(6.5, 6.5, 6.5); Calibrated: 2015/9/28;
- Sensor-Surface: 3mm (Mechanical Surface Detection)
- Electronics: DAE4 Sn1399; Calibrated: 2015/11/23
- Phantom: SAM_RIGHT; Type: QD000P40CD; Serial: 1719
- Measurement SW: DASY52, Version 52.8 (7); SEMCAD X Version 14.6.10 (7164)

Configuration/Pin=250mW/Area Scan (61x61x1): Interpolated grid: dx=1.500 mm, dy=1.500 mm
Maximum value of SAR (interpolated) = 2.61 W/kg

Configuration/Pin=250mW/Zoom Scan (5x5x7)/Cube 0: Measurement grid: dx=8mm, dy=8mm, dz=5mm
Reference Value = 55.386 V/m; Power Drift = 0.00 dB
Peak SAR (extrapolated) = 3.16 W/kg
SAR(1 g) = 2.14 W/kg; SAR(10 g) = 1.41 W/kg
Maximum value of SAR (measured) = 2.58 W/kg

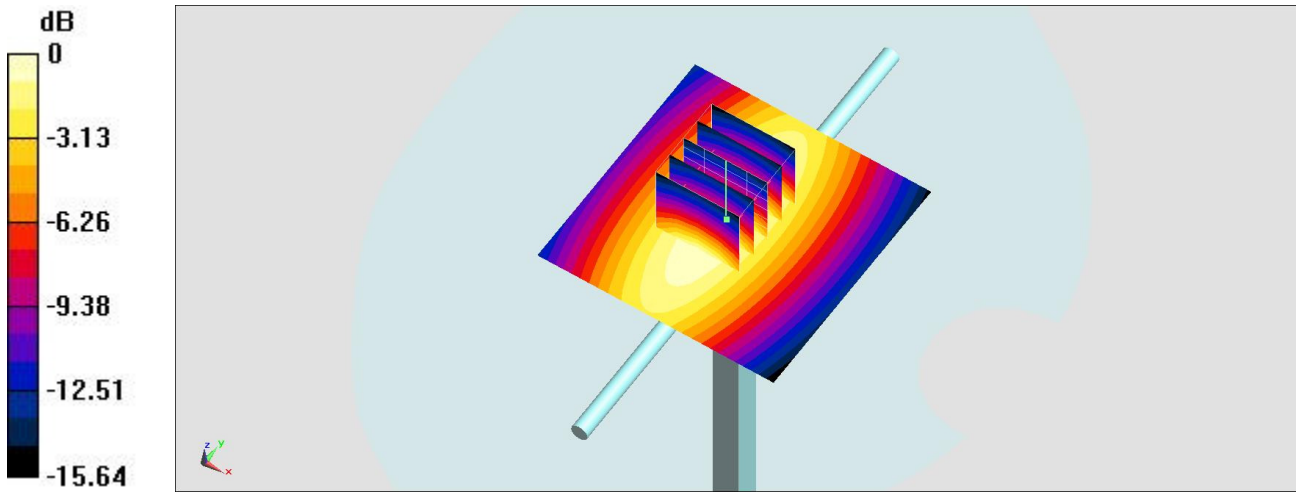

0 dB = 2.61 W/kg = 4.17 dBW/kg

System Check_Body_750MHz

DUT: D750V3-1078

Communication System: CW; Frequency: 750 MHz;Duty Cycle: 1:1
Medium: MSL_750_160524 Medium parameters used: f = 750 MHz; σ = 0.961 S/m; ε_r = 54.966; ρ = 1000 kg/m^3
Ambient Temperature：23.4 ℃； Liquid Temperature：22.4 ℃

DASY5 Configuration
- Probe: ES3DV3 - SN3270; ConvF(6.3, 6.3, 6.3); Calibrated: 2015/9/28;
- Sensor-Surface: 3mm (Mechanical Surface Detection)
- Electronics: DAE4 Sn1399; Calibrated: 2015/11/23
- Phantom: SAM LEFT; Type: QD000P40CD; Serial: TP:1718
- Measurement SW: DASY52, Version 52.8 (7); SEMCAD X Version 14.6.10 (7164)

Pin=250mW/Area Scan (61x61x1): Interpolated grid: dx=1.500 mm, dy=1.500 mm
Maximum value of SAR (interpolated) = 2.47 W/kg

Pin=250mW/Zoom Scan (5x5x7)/Cube 0: Measurement grid: dx=8mm, dy=8mm, dz=5mm
Reference Value = 52.483 V/m; Power Drift = -0.11 dB
Peak SAR (extrapolated) = 3.08 W/kg
SAR(1 g) = 2.16 W/kg; SAR(10 g) = 1.45 W/kg
Maximum value of SAR (measured) = 2.50 W/kg

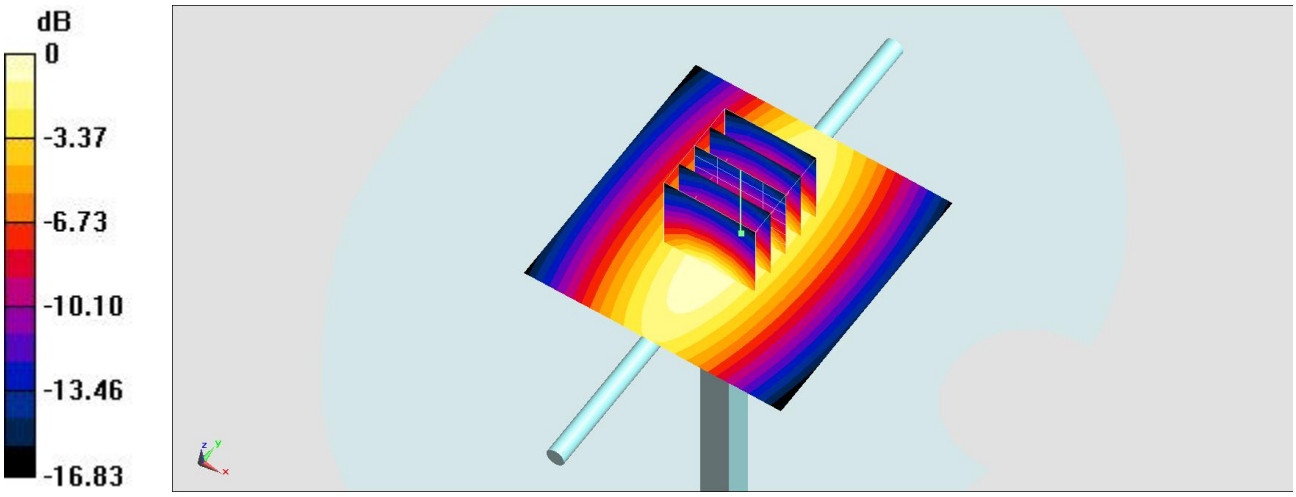

0 dB = 2.47 W/kg = 3.93 dBW/kg

System Check_Head_835MHz

DUT: D835V2-499

Communication System: CW ; Frequency: 835 MHz;Duty Cycle: 1:1
Medium: HSL_850_160523 Medium parameters used: f = 835 MHz; σ = 0.904 S/m; ε_r = 41.413; ρ = 1000 kg/m^3
Ambient Temperature：23.5 ℃； Liquid Temperature：22.5 ℃

DASY5 Configuration
- Probe: ES3DV3 - SN3270; ConvF(6.32, 6.32, 6.32); Calibrated: 2015/9/28;
- Sensor-Surface: 3mm (Mechanical Surface Detection)
- Electronics: DAE4 Sn1399; Calibrated: 2015/11/23
- Phantom: SAM_RIGHT; Type: QD000P40CD; Serial: 1719
- Measurement SW: DASY52, Version 52.8 (7); SEMCAD X Version 14.6.10 (7164)

Configuration/Pin=250mW/Area Scan (61x61x1): Interpolated grid: dx=1.500 mm, dy=1.500 mm
Maximum value of SAR (interpolated) = 2.74 W/kg

Configuration/Pin=250mW/Zoom Scan (5x5x7)/Cube 0: Measurement grid: dx=8mm, dy=8mm, dz=5mm
Reference Value = 57.014 V/m; Power Drift = 0.01 dB
Peak SAR (extrapolated) = 3.41 W/kg
SAR(1 g) = 2.34 W/kg; SAR(10 g) = 1.54 W/kg
Maximum value of SAR (measured) = 2.72 W/kg

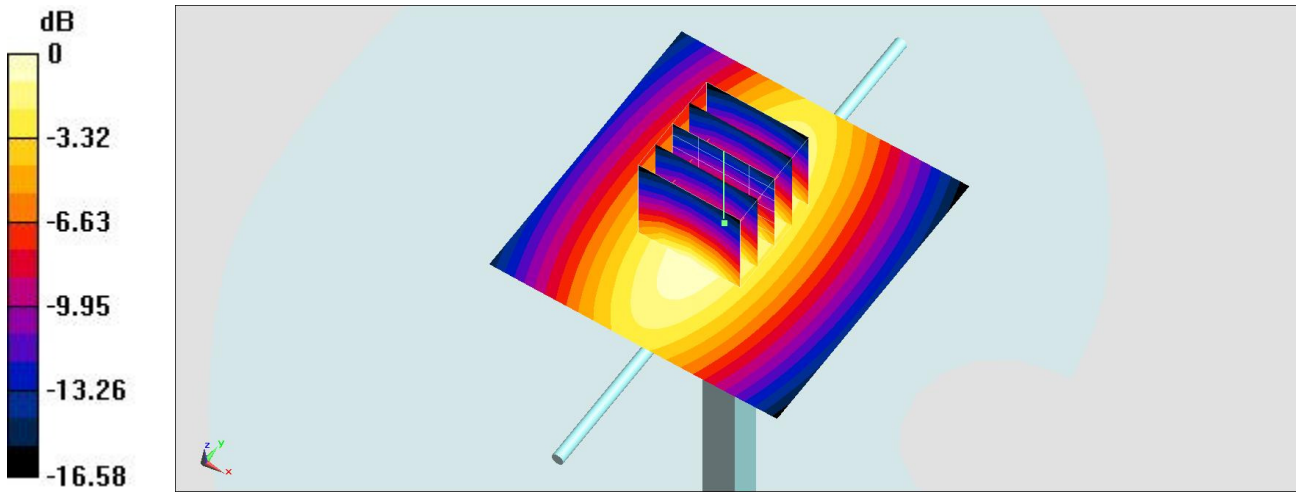

0 dB = 2.74 W/kg = 4.38 dBW/kg

System Check_Body_835MHz

DUT: D835V2-499

Communication System: CW; Frequency: 835 MHz;Duty Cycle: 1:1
Medium: MSL_850_160524 Medium parameters used: f = 835 MHz; σ = 0.979 S/m; ε_r = 56.64; ρ = 1000 kg/m^3
Ambient Temperature：23.4 ℃； Liquid Temperature：22.4 ℃

DASY5 Configuration
- Probe: ES3DV3 - SN3270; ConvF(6.24, 6.24, 6.24); Calibrated: 2015/9/28;
- Sensor-Surface: 3mm (Mechanical Surface Detection)
- Electronics: DAE4 Sn1399; Calibrated: 2015/11/23
- Phantom: SAM LEFT; Type: QD000P40CD; Serial: TP:1718
- Measurement SW: DASY52, Version 52.8 (7); SEMCAD X Version 14.6.10 (7164)

Pin=250mW/Area Scan (61x61x1): Interpolated grid: dx=1.500 mm, dy=1.500 mm
Maximum value of SAR (interpolated) = 2.63 W/kg

Pin=250mW/Zoom Scan (5x5x7)/Cube 0: Measurement grid: dx=8mm, dy=8mm, dz=5mm
Reference Value = 53.841 V/m; Power Drift = -0.10 dB
Peak SAR (extrapolated) = 3.22 W/kg
SAR(1 g) = 2.27 W/kg; SAR(10 g) = 1.51 W/kg
Maximum value of SAR (measured) = 2.62 W/kg

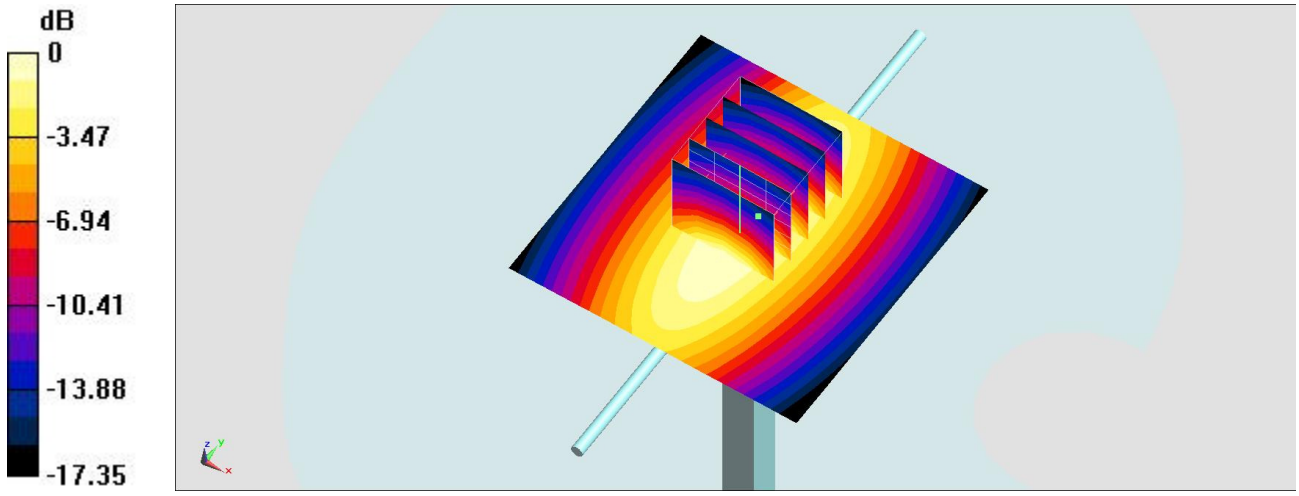

0 dB = 2.63 W/kg = 4.20 dBW/kg

System Check_Head_1750MHz

DUT: D1750V2-1068

Communication System: CW; Frequency: 1750 MHz;Duty Cycle: 1:1
Medium: HSL_1750_160523 Medium parameters used: f = 1750 MHz; σ = 1.382 S/m; ε_r = 38.901; ρ = 1000 kg/m^3
Ambient Temperature：23.7 ℃； Liquid Temperature：22.7 ℃

DASY5 Configuration
- Probe: ES3DV3 - SN3270; ConvF(5.32, 5.32, 5.32); Calibrated: 2015/9/28;
- Sensor-Surface: 3mm (Mechanical Surface Detection)
- Electronics: DAE4 Sn1399; Calibrated: 2015/11/23
- Phantom: SAM LEFT; Type: QD000P40CD; Serial: TP:1718
- Measurement SW: DASY52, Version 52.8 (7); SEMCAD X Version 14.6.10 (7164)

Configuration/Pin=250mW/Area Scan (61x61x1): Interpolated grid: dx=1.500 mm, dy=1.500 mm
Maximum value of SAR (interpolated) = 10.3 W/kg

Configuration/Pin=250mW/Zoom Scan (5x5x7)/Cube 0: Measurement grid: dx=8mm, dy=8mm, dz=5mm
Reference Value = 82.597 V/m; Power Drift = 0.05 dB
Peak SAR (extrapolated) = 13.2 W/kg
SAR(1 g) = 8.5 W/kg; SAR(10 g) = 4.94 W/kg
Maximum value of SAR (measured) = 10.2 W/kg

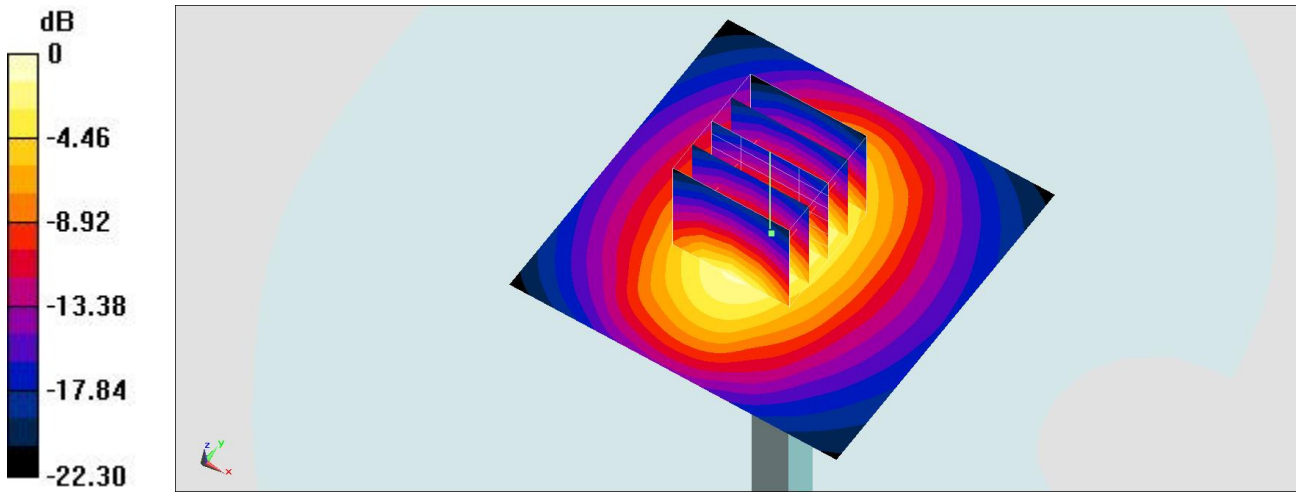

0 dB = 10.3 W/kg = 10.13 dBW/kg

System Check_Body_1750MHz

DUT: D1750V2-1068

Communication System: CW ; Frequency: 1750 MHz;Duty Cycle: 1:1
Medium: MSL_1750_160524 Medium parameters used: f = 1750 MHz; σ = 1.48 S/m; ε_r = 55.23; ρ = 1000 kg/m^3
Ambient Temperature：23.3 ℃； Liquid Temperature：22.3 ℃

DASY5 Configuration
- Probe: ES3DV3 - SN3270; ConvF(4.95, 4.95, 4.95); Calibrated: 2015/9/28;
- Sensor-Surface: 3mm (Mechanical Surface Detection)
- Electronics: DAE4 Sn1399; Calibrated: 2015/11/23
- Phantom: SAM_RIGHT; Type: QD000P40CD; Serial: 1719
- Measurement SW: DASY52, Version 52.8 (7); SEMCAD X Version 14.6.10 (7164)

Configuration/Pin=250mW/Area Scan (61x61x1): Interpolated grid: dx=1.500 mm, dy=1.500 mm
Maximum value of SAR (interpolated) = 11.8 W/kg

Configuration/Pin=250mW/Zoom Scan (5x5x7)/Cube 0: Measurement grid: dx=8mm, dy=8mm, dz=5mm
Reference Value = 83.675 V/m; Power Drift = -0.02 dB
Peak SAR (extrapolated) = 15.5 W/kg
SAR(1 g) = 8.99 W/kg; SAR(10 g) = 4.83 W/kg
Maximum value of SAR (measured) = 11.3 W/kg

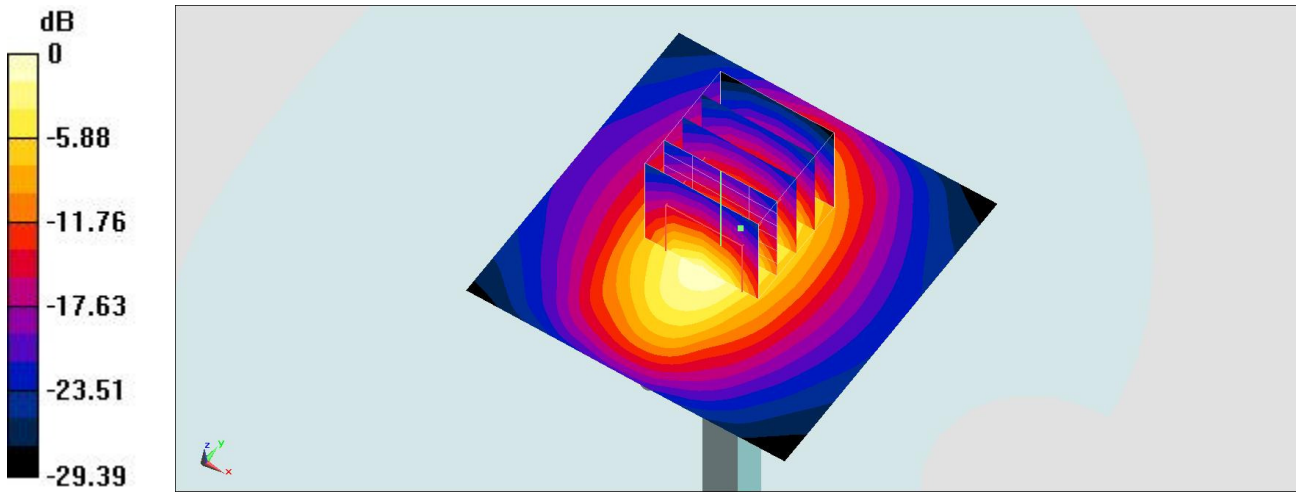

0 dB = 11.8 W/kg = 10.72 dBW/kg

System Check_Head_1900MHz

DUT: D1900V2-5d041

Communication System: CW; Frequency: 1900 MHz;Duty Cycle: 1:1
Medium: HSL_1900_160523 Medium parameters used: f = 1900 MHz; σ = 1.431 S/m; ε_r = 38.653; ρ = 1000 kg/m^3
Ambient Temperature：23.7 ℃； Liquid Temperature：22.7 ℃

DASY5 Configuration
- Probe: ES3DV3 - SN3270; ConvF(5.12, 5.12, 5.12); Calibrated: 2015/9/28;
- Sensor-Surface: 3mm (Mechanical Surface Detection)
- Electronics: DAE4 Sn1399; Calibrated: 2015/11/23
- Phantom: SAM LEFT; Type: QD000P40CD; Serial: TP:1718
- Measurement SW: DASY52, Version 52.8 (7); SEMCAD X Version 14.6.10 (7164)

Configuration/Pin=250mW/Area Scan (61x61x1): Interpolated grid: dx=1.500 mm, dy=1.500 mm
Maximum value of SAR (interpolated) = 15.2 W/kg

Configuration/Pin=250mW/Zoom Scan (5x5x7)/Cube 0: Measurement grid: dx=8mm, dy=8mm, dz=5mm
Reference Value = 111.3 V/m; Power Drift = 0.04 dB
Peak SAR (extrapolated) = 19.5 W/kg
SAR(1 g) = 10.5 W/kg; SAR(10 g) = 5.42 W/kg
Maximum value of SAR (measured) = 15.0 W/kg

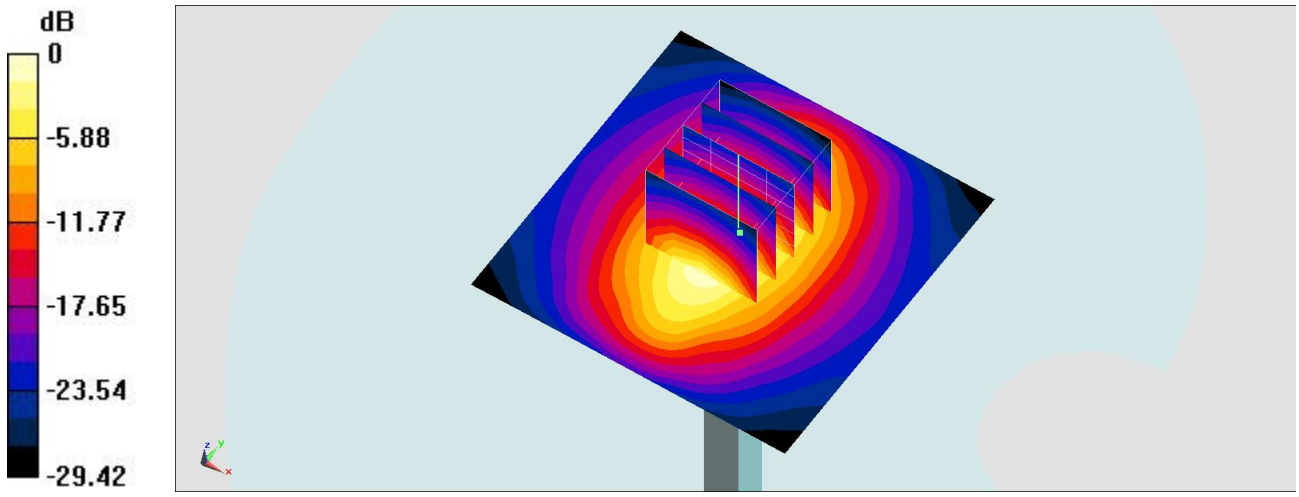

0 dB = 15.2 W/kg = 11.82 dBW/kg

System Check_Body_1900MHz

DUT: D1900V2-5d041

Communication System: CW ; Frequency: 1900 MHz;Duty Cycle: 1:1
Medium: MSL_1900_160524 Medium parameters used: f = 1900 MHz; σ = 1.58 S/m; ε_r = 52.579; ρ = 1000 kg/m^3
Ambient Temperature：23.3 ℃； Liquid Temperature：22.3 ℃

DASY5 Configuration
- Probe: ES3DV3 - SN3270; ConvF(4.78, 4.78, 4.78); Calibrated: 2015/9/28;
- Sensor-Surface: 3mm (Mechanical Surface Detection)
- Electronics: DAE4 Sn1399; Calibrated: 2015/11/23
- Phantom: SAM_RIGHT; Type: QD000P40CD; Serial: 1719
- Measurement SW: DASY52, Version 52.8 (7); SEMCAD X Version 14.6.10 (7164)

Configuration/Pin=250mW/Area Scan (61x61x1): Interpolated grid: dx=1.500 mm, dy=1.500 mm
Maximum value of SAR (interpolated) = 13.9 W/kg

Configuration/Pin=250mW/Zoom Scan (5x5x7)/Cube 0: Measurement grid: dx=8mm, dy=8mm, dz=5mm
Reference Value = 96.988 V/m; Power Drift = -0.10 dB
Peak SAR (extrapolated) = 18.2 W/kg
SAR(1 g) = 10.4 W/kg; SAR(10 g) = 5.5 W/kg
Maximum value of SAR (measured) = 12.8 W/kg

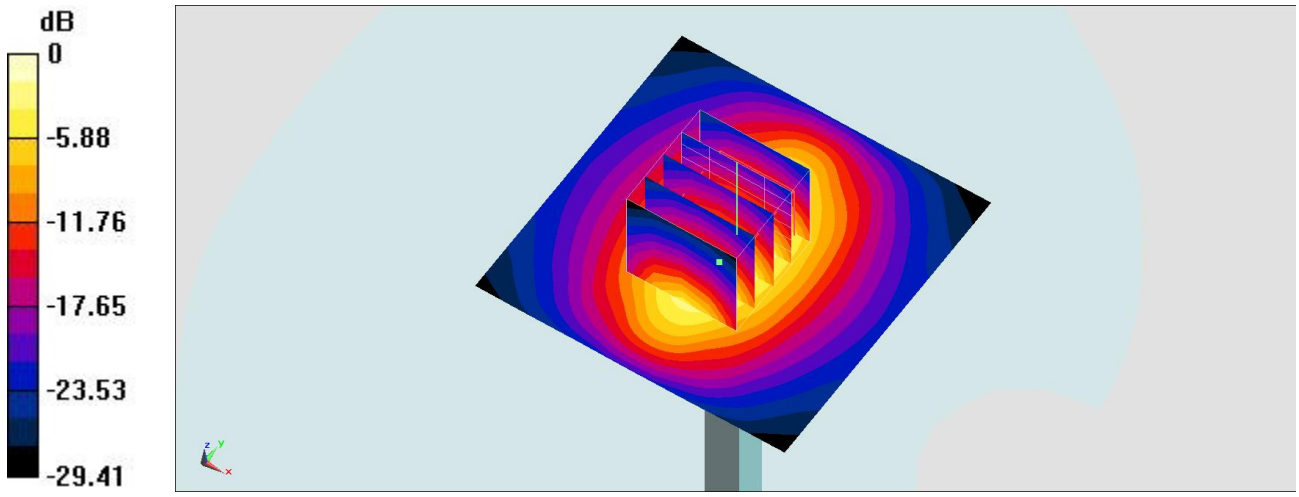

0 dB = 13.9 W/kg = 11.43 dBW/kg

System Check_Head_2450MHz

DUT: D2450V2-736

Communication System: CW; Frequency: 2450 MHz;Duty Cycle: 1:1
Medium: HSL_2450_160526 Medium parameters used: f = 2450 MHz; σ = 1.841 S/m; ε_r = 38.816; ρ = 1000 kg/m^3
Ambient Temperature：23.2 ℃； Liquid Temperature：22.2 ℃

DASY5 Configuration
- Probe: ES3DV3 - SN3270; ConvF(4.59, 4.59, 4.59); Calibrated: 2015/9/28;
- Sensor-Surface: 3mm (Mechanical Surface Detection)
- Electronics: DAE4 Sn1399; Calibrated: 2015/11/23
- Phantom: SAM LEFT; Type: QD000P40CD; Serial: TP:1718
- Measurement SW: DASY52, Version 52.8 (7); SEMCAD X Version 14.6.10 (7164)

Pin=250mW/Area Scan (61x61x1): Interpolated grid: dx=1.200 mm, dy=1.200 mm
Maximum value of SAR (interpolated) = 18.7 W/kg

Pin=250mW/Zoom Scan (7x7x7)/Cube 0: Measurement grid: dx=5mm, dy=5mm, dz=5mm
Reference Value = 103.6 V/m; Power Drift = -0.08 dB
Peak SAR (extrapolated) = 28.2 W/kg
SAR(1 g) = 13.6 W/kg; SAR(10 g) = 6.24 W/kg
Maximum value of SAR (measured) = 17.9 W/kg

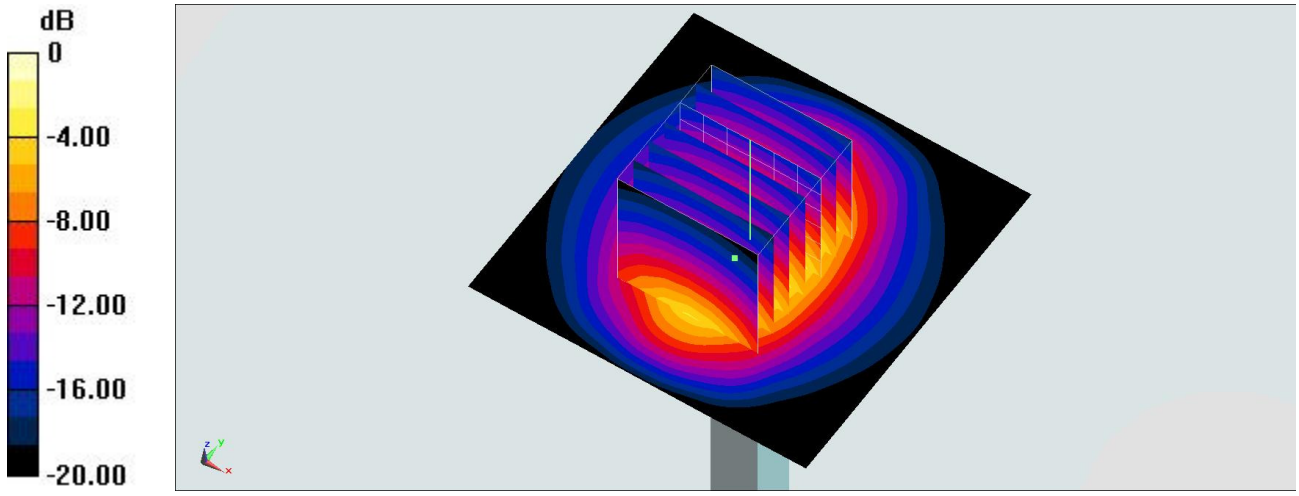

0 dB = 18.7 W/kg = 12.72 dBW/kg

System Check_Body_2450MHz

DUT: D2450V2-736

Communication System: CW; Frequency: 2450 MHz;Duty Cycle: 1:1
Medium: MSL_2450_160525 Medium parameters used: f = 2450 MHz; σ = 1.975 S/m; ε_r = 53.476; ρ = 1000 kg/m^3
Ambient Temperature：23.2 ℃； Liquid Temperature：22.2 ℃

DASY5 Configuration
- Probe: ES3DV3 - SN3270; ConvF(4.37, 4.37, 4.37); Calibrated: 2015/9/28;
- Sensor-Surface: 3mm (Mechanical Surface Detection)
- Electronics: DAE4 Sn1399; Calibrated: 2015/11/23
- Phantom: SAM LEFT; Type: QD000P40CD; Serial: TP:1718
- Measurement SW: DASY52, Version 52.8 (7); SEMCAD X Version 14.6.10 (7164)

Configuration/Pin=250mW/Area Scan (71x71x1): Interpolated grid: dx=1.200 mm, dy=1.200 mm
Maximum value of SAR (interpolated) = 20.6 W/kg

Configuration/Pin=250mW/Zoom Scan (7x7x7)/Cube 0: Measurement grid: dx=5mm, dy=5mm, dz=5mm
Reference Value = 109.8 V/m; Power Drift = -0.00 dB
Peak SAR (extrapolated) = 27.2 W/kg
SAR(1 g) = 13.2 W/kg; SAR(10 g) = 6.11 W/kg
Maximum value of SAR (measured) = 20.2 W/kg

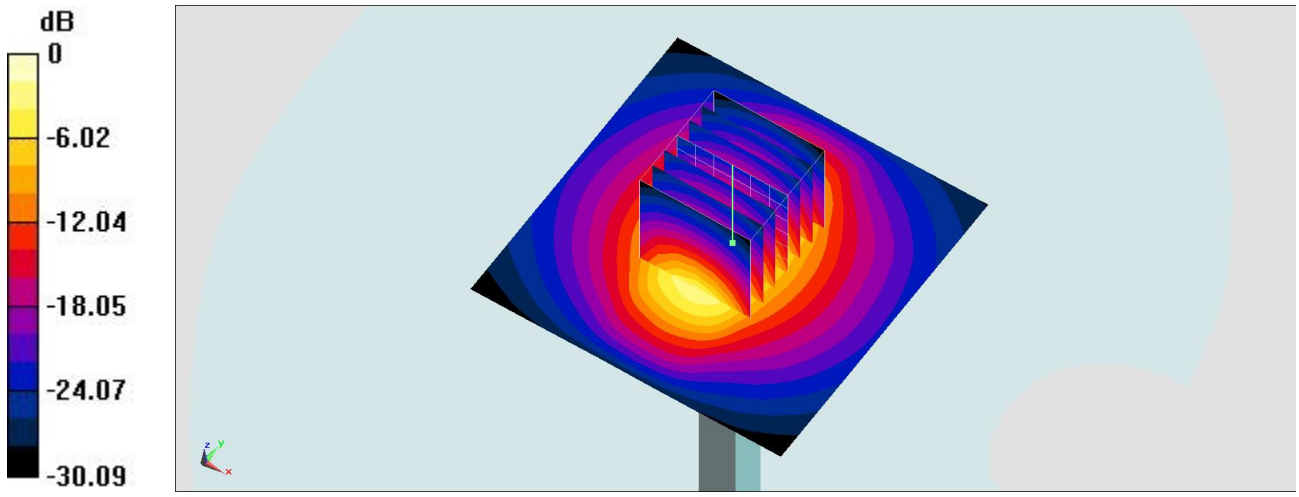

0 dB = 20.6 W/kg = 13.14 dBW/kg

System Check_Head_2600MHz

DUT: D2600V2-1008

Communication System: CW; Frequency: 2600 MHz;Duty Cycle: 1:1
Medium: HSL_2600_160524 Medium parameters used: f = 2600 MHz; σ = 1.922 S/m; ε_r = 39.447; ρ = 1000 kg/m^3
Ambient Temperature：23.6 ℃； Liquid Temperature：22.6 ℃

DASY5 Configuration
- Probe: ES3DV3 - SN3270; ConvF(4.44, 4.44, 4.44); Calibrated: 2015/9/28;
- Sensor-Surface: 3mm (Mechanical Surface Detection)
- Electronics: DAE4 Sn1399; Calibrated: 2015/11/23
- Phantom: SAM LEFT; Type: QD000P40CD; Serial: TP:1718
- Measurement SW: DASY52, Version 52.8 (7); SEMCAD X Version 14.6.10 (7164)

Pin=250mW/Area Scan (81x81x1): Interpolated grid: dx=1.200 mm, dy=1.200 mm
Maximum value of SAR (interpolated) = 22.0 W/kg

Pin=250mW/Zoom Scan (7x7x7)/Cube 0: Measurement grid: dx=5mm, dy=5mm, dz=5mm
Reference Value = 117.6 V/m; Power Drift = -0.12 dB
Peak SAR (extrapolated) = 30.4 W/kg
SAR(1 g) = 14.2 W/kg; SAR(10 g) = 6.29 W/kg
Maximum value of SAR (measured) = 21.9 W/kg

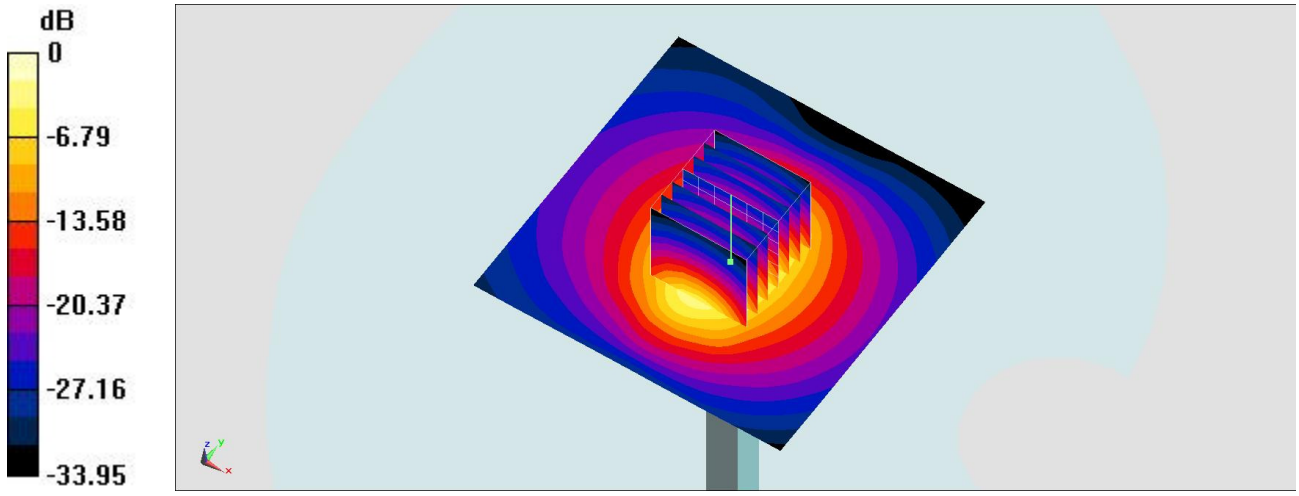

0 dB = 22.0 W/kg = 13.42 dBW/kg

System Check_Body_2600MHz

DUT: D2600V2-1008

Communication System: CW; Frequency: 2600 MHz;Duty Cycle: 1:1
Medium: MSL_2600_160525 Medium parameters used: f = 2600 MHz; σ = 2.182 S/m; ε_r = 52.973; ρ = 1000 kg/m^3
Ambient Temperature：23.3 ℃； Liquid Temperature：22.3 ℃

DASY5 Configuration
- Probe: ES3DV3 - SN3270; ConvF(4.27, 4.27, 4.27); Calibrated: 2015/9/28;
- Sensor-Surface: 3mm (Mechanical Surface Detection)
- Electronics: DAE4 Sn1399; Calibrated: 2015/11/23
- Phantom: SAM LEFT; Type: QD000P40CD; Serial: TP:1718
- Measurement SW: DASY52, Version 52.8 (7); SEMCAD X Version 14.6.10 (7164)

Configuration/Pin=250mW/Area Scan (71x71x1): Interpolated grid: dx=1.200 mm, dy=1.200 mm
Maximum value of SAR (interpolated) = 19.1 W/kg

Configuration/Pin=250mW/Zoom Scan (7x7x7)/Cube 0: Measurement grid: dx=5mm, dy=5mm, dz=5mm
Reference Value = 97.350 V/m; Power Drift = 0.19 dB
Peak SAR (extrapolated) = 29.2 W/kg
SAR(1 g) = 13.3 W/kg; SAR(10 g) = 5.91 W/kg
Maximum value of SAR (measured) = 21.1 W/kg

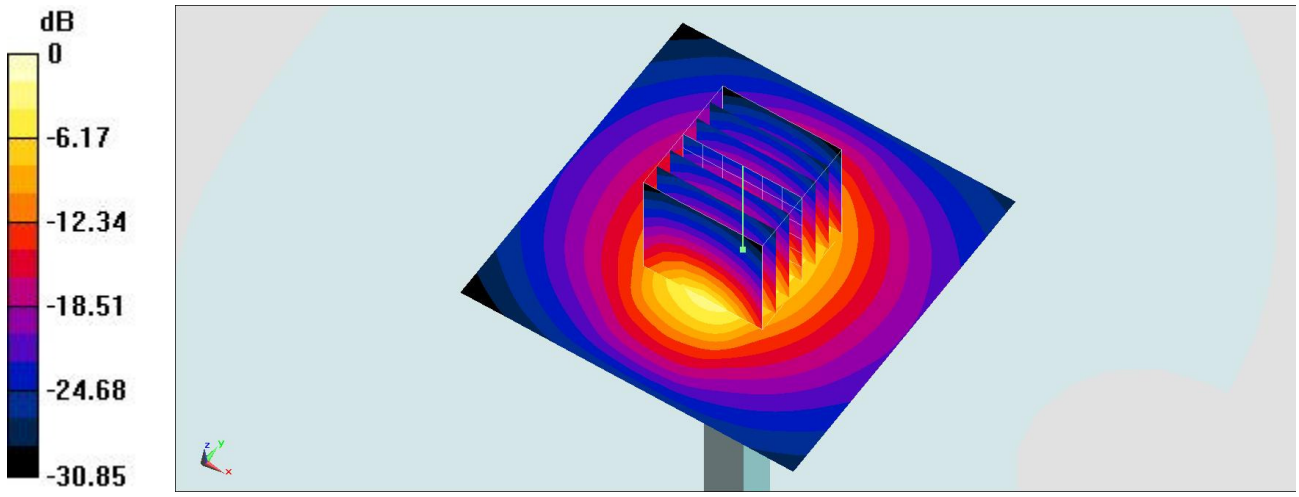

0 dB = 19.1 W/kg = 12.81 dBW/kg

Test Laboratory: Sporton International Inc. SAR/HAC Testing Lab Date: 2016/5/26

System Check_Body_5200MHz

DUT: D5GHzV2-1006

Communication System: CW ; Frequency: 5200 MHz;Duty Cycle: 1:1
Medium: MSL_5G_160526 Medium parameters used: f = 5200 MHz; σ = 5.33 mho/m; ε_r = 46.8; ρ = 1000 kg/m^3
Ambient Temperature：23.4 ℃； Liquid Temperature：22.4 ℃

DASY4 Configuration:
- Probe: EX3DV4 - SN7346; ConvF(4.64, 4.64, 4.64); Calibrated: 2015/9/2
- Sensor-Surface: 1.4mm (Mechanical Surface Detection)
- Electronics: DAE4 Sn916; Calibrated: 2015/12/16
- Phantom: SAM_Right; Type: SAM_Right; Serial: TP-1303
- ;Postprocessing SW: SEMCAD, V1.8 Build 159

Pin=100mW/Area Scan (71x71x1): Measurement grid: dx=10mm, dy=10mm
Maximum value of SAR (interpolated) = 15.5 mW/g

Pin=100mW/Zoom Scan (7x7x7)/Cube 0: Measurement grid: dx=4mm, dy=4mm, dz=1.4mm
Reference Value = 41.8 V/m; Power Drift = 0.118 dB
Peak SAR (extrapolated) = 30.1 W/kg
SAR(1 g) = 7.31 mW/g; SAR(10 g) = 1.95 mW/g
Maximum value of SAR (measured) = 17.8 mW/g

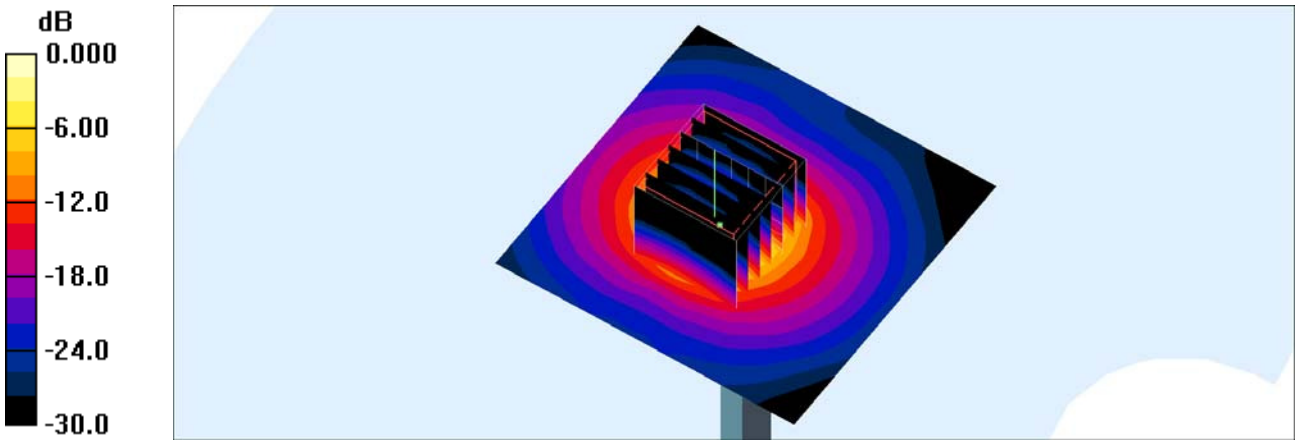

0 dB = 17.8mW/g

Test Laboratory: Sporton International Inc. SAR/HAC Testing Lab Date: 2016/5/27

System Check_Head_5300MHz

DUT: D5GHzV2-1006

Communication System: CW; Frequency: 5300 MHz;Duty Cycle: 1:1
Medium: HSL_5G_160527 Medium parameters used: f = 5300 MHz; σ = 4.54 mho/m; ε_r = 36.3; ρ = 1000 kg/m^3
Ambient Temperature：23.5 ℃; Liquid Temperature：22.5 ℃

DASY4 Configuration:
- Probe: EX3DV4 - SN7346; ConvF(5.09, 5.09, 5.09); Calibrated: 2015/9/2
- Sensor-Surface: 1.4mm (Mechanical Surface Detection)
- Electronics: DAE4 Sn916; Calibrated: 2015/12/16
- Phantom: SAM_Right; Type: SAM_Right; Serial: TP-1303
- ;Postprocessing SW: SEMCAD, V1.8 Build 159

Pin=100mW/Area Scan (71x71x1): Measurement grid: dx=10mm, dy=10mm
Maximum value of SAR (interpolated) = 15.5 mW/g

Pin=100mW/Zoom Scan (7x7x7)/Cube 0: Measurement grid: dx=4mm, dy=4mm, dz=1.4mm
Reference Value = 63.4 V/m; Power Drift = 0.13 dB
Peak SAR (extrapolated) = 33.1 W/kg
SAR(1 g) = 8.06 mW/g; SAR(10 g) = 2.22 mW/g
Maximum value of SAR (measured) = 20.2 mW/g

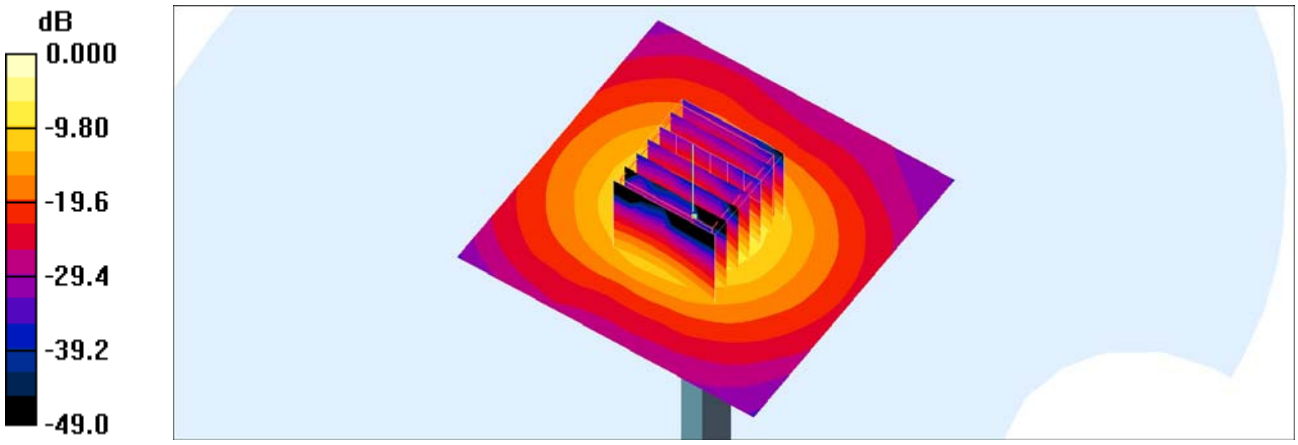

0 dB = 20.2mW/g

Test Laboratory: Sporton International Inc. SAR/HAC Testing Lab Date: 2016/5/26

System Check_Body_5300MHz

DUT: D5GHzV2-1006

Communication System: CW; Frequency: 5300 MHz;Duty Cycle: 1:1
Medium: MSL_5G_160526 Medium parameters used: f = 5300 MHz; σ = 5.46 mho/m; ε_r = 46.7; ρ = 1000 kg/m^3
Ambient Temperature：23.4 ℃; Liquid Temperature：22.4 ℃

DASY4 Configuration:
- Probe: EX3DV4 - SN7346; ConvF(4.42, 4.42, 4.42); Calibrated: 2015/9/2
- Sensor-Surface: 1.4mm (Mechanical Surface Detection)
- Electronics: DAE4 Sn916; Calibrated: 2015/12/16
- Phantom: SAM_Right; Type: SAM_Right; Serial: TP-1303
- ;Postprocessing SW: SEMCAD, V1.8 Build 159

Pin=100mW/Area Scan (71x71x1): Measurement grid: dx=10mm, dy=10mm
Maximum value of SAR (interpolated) = 18.3 mW/g

Pin=100mW/Zoom Scan (7x7x7)/Cube 0: Measurement grid: dx=4mm, dy=4mm, dz=1.4mm
Reference Value = 46.4 V/m; Power Drift = -0.097 dB
Peak SAR (extrapolated) = 29.2 W/kg
SAR(1 g) = 7.46 mW/g; SAR(10 g) = 2.08 mW/g
Maximum value of SAR (measured) = 17.7 mW/g

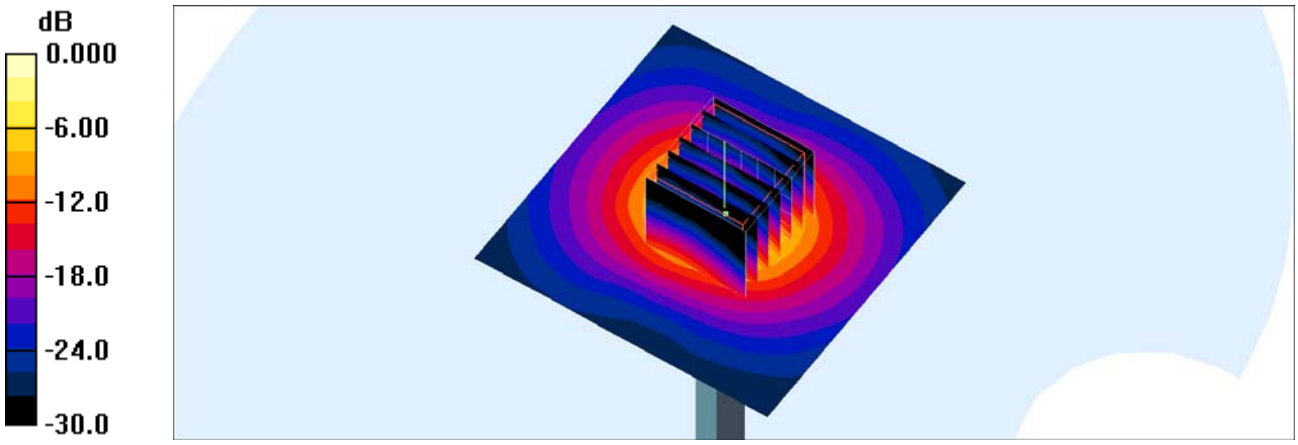

0 dB = 17.7mW/g

Test Laboratory: Sporton International Inc. SAR/HAC Testing Lab Date: 2016/5/27

System Check_Head_5600MHz

DUT: D5GHzV2-1006

Communication System: CW; Frequency: 5600 MHz;Duty Cycle: 1:1
Medium: HSL_5G_160527 Medium parameters used: f = 5600 MHz; σ = 4.83 mho/m; ε_r = 35.8; ρ = 1000 kg/m^3
Ambient Temperature：23.5 ℃； Liquid Temperature：22.5 ℃

DASY4 Configuration:
- Probe: EX3DV4 - SN7346; ConvF(4.48, 4.48, 4.48); Calibrated: 2015/9/2
- Sensor-Surface: 1.4mm (Mechanical Surface Detection)
- Electronics: DAE4 Sn916; Calibrated: 2015/12/16
- Phantom: SAM_Right; Type: SAM_Right; Serial: TP-1303
- ;Postprocessing SW: SEMCAD, V1.8 Build 159

Pin=100mW/Area Scan (71x71x1): Measurement grid: dx=10mm, dy=10mm
Maximum value of SAR (interpolated) = 22.3 mW/g

Pin=100mW/Zoom Scan (7x7x7)/Cube 0: Measurement grid: dx=4mm, dy=4mm, dz=1.4mm
Reference Value = 38.7 V/m; Power Drift = 0.100 dB
Peak SAR (extrapolated) = 38.7 W/kg
SAR(1 g) = 8.92 mW/g; SAR(10 g) = 2.43 mW/g
Maximum value of SAR (measured) = 22.9 mW/g

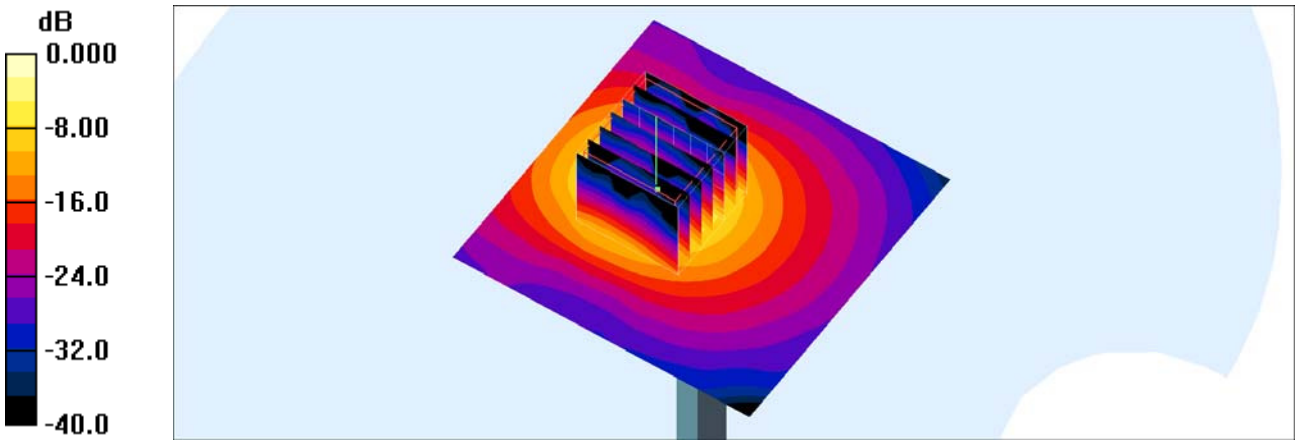

0 dB = 22.9mW/g

System Check_Body_5600MHz

DUT: D5GHzV2-1006

Communication System: CW; Frequency: 5600 MHz;Duty Cycle: 1:1
Medium: MSL_5G_160526 Medium parameters used: f = 5600 MHz; σ = 5.85 mho/m; ε_r = 46.2; ρ = 1000 kg/m^3
Ambient Temperature：23.4 ℃； Liquid Temperature：22.4 ℃

DASY4 Configuration:
- Probe: EX3DV4 - SN7346; ConvF(3.9, 3.9, 3.9); Calibrated: 2015/9/2
- Sensor-Surface: 1.4mm (Mechanical Surface Detection)
- Electronics: DAE4 Sn916; Calibrated: 2015/12/16
- Phantom: SAM_Right; Type: SAM_Right; Serial: TP-1303
- ;Postprocessing SW: SEMCAD, V1.8 Build 159

Pin=100mW/Area Scan (71x71x1): Measurement grid: dx=10mm, dy=10mm
Maximum value of SAR (interpolated) = 22.0 mW/g

Pin=100mW/Zoom Scan (7x7x7)/Cube 0: Measurement grid: dx=4mm, dy=4mm, dz=1.4mm
Reference Value = 66.0 V/m; Power Drift = -0.062 dB
Peak SAR (extrapolated) = 37.4 W/kg
SAR(1 g) = 8.39 mW/g; SAR(10 g) = 2.23 mW/g
Maximum value of SAR (measured) = 21.3 mW/g

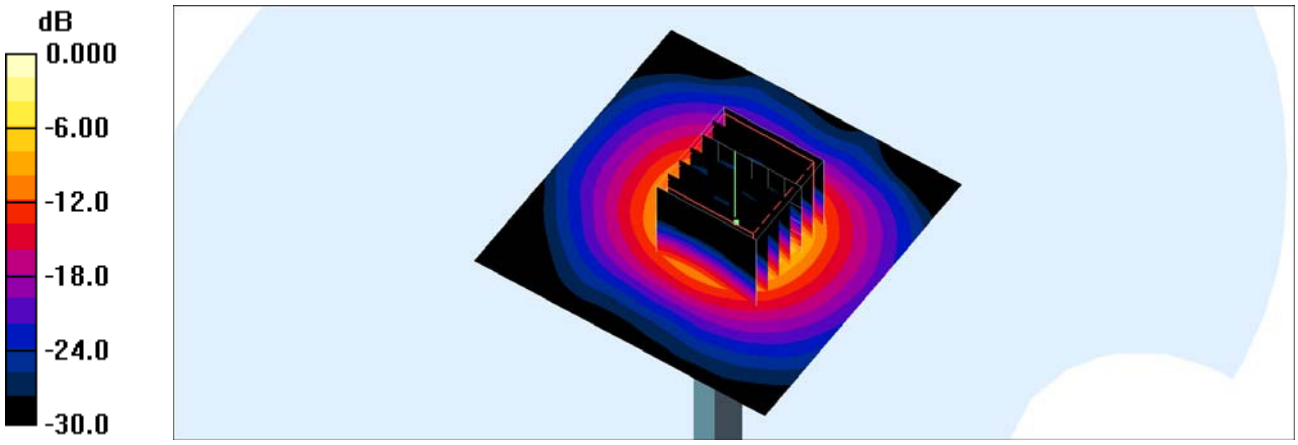

0 dB = 21.3mW/g

Test Laboratory: Sporton International Inc. SAR/HAC Testing Lab Date: 2016/5/27

System Check_Head_5800MHz

DUT: D5GHzV2-1006

Communication System: CW; Frequency: 5800 MHz;Duty Cycle: 1:1
Medium: HSL_5G_160527 Medium parameters used: f = 5800 MHz; σ = 5.02 mho/m; ε_r = 35.6; ρ = 1000 kg/m^3
Ambient Temperature：23.5 ℃; Liquid Temperature：22.5 ℃

DASY4 Configuration:
- Probe: EX3DV4 - SN7346; ConvF(4.59, 4.59, 4.59); Calibrated: 2015/9/2
- Sensor-Surface: 1.4mm (Mechanical Surface Detection)
- Electronics: DAE4 Sn916; Calibrated: 2015/12/16
- Phantom: SAM_Right; Type: SAM_Right; Serial: TP-1303
- ;Postprocessing SW: SEMCAD, V1.8 Build 159

Pin=100mW/Area Scan (71x71x1): Measurement grid: dx=10mm, dy=10mm
Maximum value of SAR (interpolated) = 20.2 mW/g

Pin=100mW/Zoom Scan (7x7x7)/Cube 0: Measurement grid: dx=4mm, dy=4mm, dz=1.4mm
Reference Value = 69.1 V/m; Power Drift = 0.109 dB
Peak SAR (extrapolated) = 36.5 W/kg
SAR(1 g) = 8.03 mW/g; SAR(10 g) = 2.2 mW/g
Maximum value of SAR (measured) = 20.9 mW/g

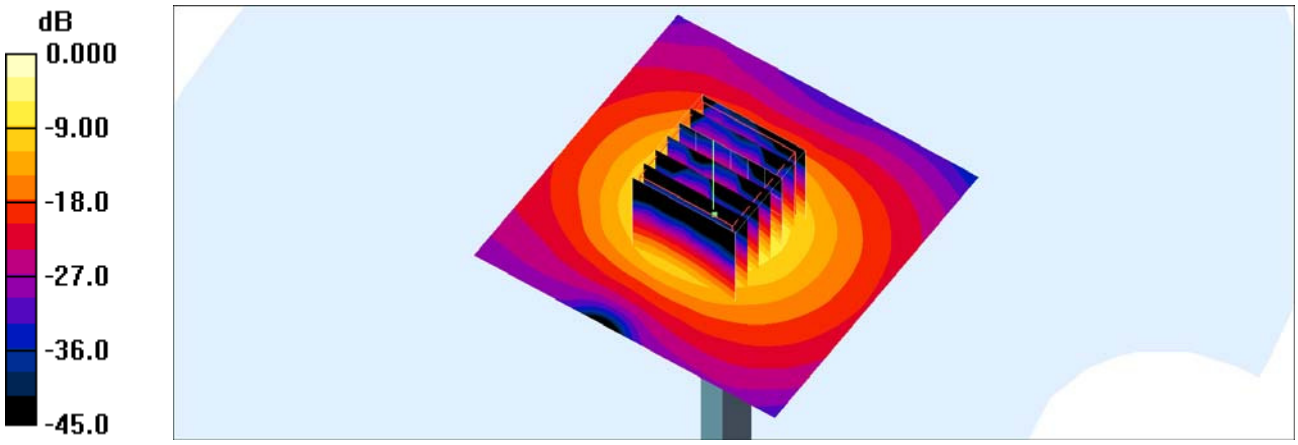

0 dB = 20.9mW/g

System Check_Body_5800MHz

DUT: D5GHzV2-1006

Communication System: CW; Frequency: 5800 MHz;Duty Cycle: 1:1
Medium: MSL_5G_160526 Medium parameters used: f = 5800 MHz; σ = 6.1 mho/m; ε_r = 45.9; ρ = 1000 kg/m^3
Ambient Temperature：23.4 ℃； Liquid Temperature：22.4 ℃

DASY4 Configuration:
- Probe: EX3DV4 - SN7346; ConvF(4.08, 4.08, 4.08); Calibrated: 2015/9/2
- Sensor-Surface: 1.4mm (Mechanical Surface Detection)
- Electronics: DAE4 Sn916; Calibrated: 2015/12/16
- Phantom: SAM_Right; Type: SAM_Right; Serial: TP-1303
- ;Postprocessing SW: SEMCAD, V1.8 Build 159

Pin=100mW/Area Scan (71x71x1): Measurement grid: dx=10mm, dy=10mm
Maximum value of SAR (interpolated) = 21.6 mW/g

Pin=100mW/Zoom Scan (7x7x7)/Cube 0: Measurement grid: dx=4mm, dy=4mm, dz=1.4mm
Reference Value = 45.8 V/m; Power Drift = 0.022 dB
Peak SAR (extrapolated) = 38.4 W/kg
SAR(1 g) = 8.52 mW/g; SAR(10 g) = 2.34 mW/g
Maximum value of SAR (measured) = 21.8 mW/g

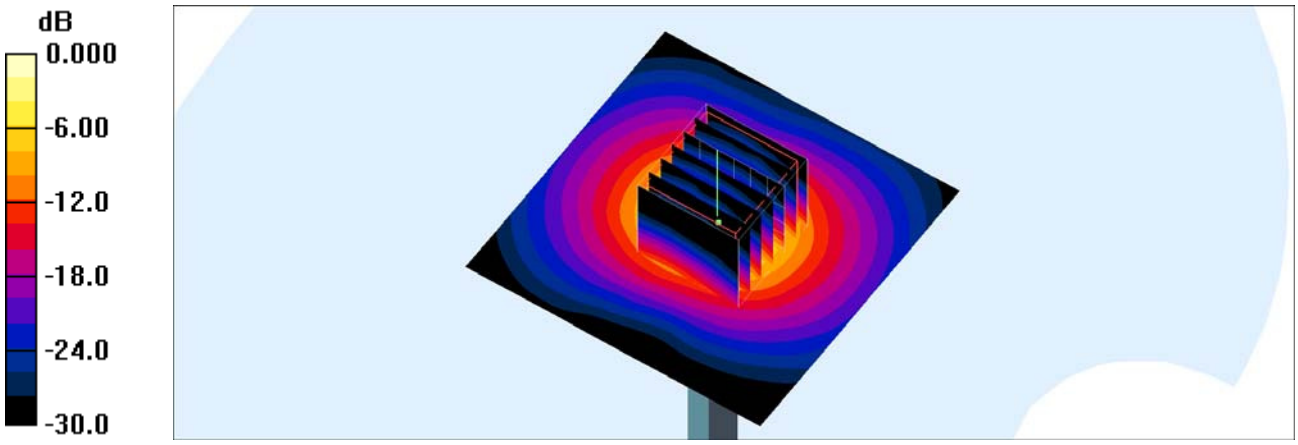

0 dB = 21.8mW/g