FCC RF Test Report

APPLICANT	:	Motorola Mobility, LLC
EQUIPMENT	:	Mobile Cellular Phone
BRAND NAME	:	Motorola
MODEL NAME	:	6574
FCC ID	:	IHDT56VB2
STANDARD	:	FCC Part 15 Subpart C §15.225
CLASSIFICATION	:	(DXX) Low Power Communication Device Transmitter

This is a variant report which is only valid together with the original test report. The testing was completed on May 23, 2016. We, SPORTON INTERNATIONAL INC., would like to declare that the tested sample has been evaluated in accordance with the test procedures and has been in compliance with the applicable technical standards.

The test results in this report apply exclusively to the tested model / sample. Without written approval of SPORTON INTERNATIONAL INC., the test report shall not be reproduced except in full.

Reviewed by: Joseph Lin / Supervisor

Approved by: Jones Tsai / Manager

Testing Laboratory 1190

SPORTON INTERNATIONAL INC.

No. 52, Hwa Ya 1st Rd., Hwa Ya Technology Park, Kwei-Shan District, Tao Yuan City, Taiwan, R.O.C.

Table of Contents

SUMMARY OF THE TEST RESULT **4**

1. GENERAL INFORMATION **5**

1.1 Applicant 5
1.2 Manufacturer 5
1.3 Feature of Equipment Under Test 5
1.4 Product Details 6
1.5 Modification of EUT 6
1.6 Testing Location 7
1.7 Applicable Standards 7
1.8 Test Modes 8
1.9 Test Configurations 9
1.10 Table for Supporting Units 11

2. CONDUCTED EMISSION TEST **12**

2.1 Measuring Instruments 12
2.2 Test setup 12
2.3 Test Result of Conducted Emission Test 12
2.4 AC Power Line Conducted Emissions Measurement 13

3. RADIATED TEST ITEMS **14**

3.1 Measuring Instruments 14
3.2 Test Setup 14
3.3 Test Result of Radiated Test Items 14
3.4 Field Strength of Fundamental Emissions and Mask Measurement 15
3.5 Radiated Emissions Measurement 16

4. LIST OF MEASURING EQUIPMENT **18**

APPENDIX A. TEST RESULTS OF CONDUCTED EMISSION TEST

APPENDIX B. TEST RESULTS OF RADIATED TEST ITEMS

B.1 Test Result of Field Strength of Fundamental Emissions
B.2 Results of Radiated Emissions (9 kHz~30MHz)
B.3 Results of Radiated Emissions (30MHz~1GHz)

APPENDIX C. ORIGINAL REPORT

REVISION HISTORY

REPORT NO.	VERSION	DESCRIPTION	ISSUED DATE
FR640145-15F	Rev. 01	This is a variant report. All the test cases were performed base on the worst case identified in the original report. The test purpose is to verify the influence caused by additional accessory applied, hence only RSE and AC conducted emission need to be considered. Please referred to appendix C for the original report.(Sporton Report Number FR640145F)	Jun. 01, 2016

SUMMARY OF THE TEST RESULT

Applied Standard: 47 CFR FCC Part 15 Subpart C				
Part	**FCC Rule**	**Description of Test**	**Result**	**Under Limit**
3.1	15.207	AC Power Line Conducted Emissions	Complies	3.90 dB at 13.558MHz
3.2	15.225(a)(b)(c)	Field Strength of Fundamental Emissions	Complies	58.44 dB at 13.560 MHz
3.4	15.225(d) 15.209	Radiated Emissions	Complies	3.20 dB at 40.800 MHz
3.6	15.203	Antenna Requirements	Complies	-

Test Items	Uncertainty	Remark
AC Power Line Conducted Emissions	±2.26dB	Confidence levels of 95%
Radiated Emissions (30MHz~1000MHz)	±4.80dB	Confidence levels of 95%

1. GENERAL INFORMATION

1.1 Applicant

Motorola Mobility, LLC

222 W Merchandise Mart Plaza, Suite 1800, Chicago, IL 60654, United States

1.2 Manufacturer

Motorola Mobility, LLC

222 W Merchandise Mart Plaza, Suite 1800, Chicago, IL 60654, United States

1.3 Feature of Equipment Under Test

Product Feature	
Equipment	Mobile Cellular Phone
Brand Name	Motorola
FCC Model Name	6574
FCC ID	IHDT56VB2
IMEI Code	354108070054138 (for Radiation) 354108070054146 (for Conduction)
EUT supports Radios application	CDMA/EV-DO/GSM/EGPRS/WCDMA/HSPA/LTE/NFC WLAN 11b/g/n HT20/VHT20 WLAN 11a/n HT20/HT40 WLAN 11ac VHT20/VHT40/VHT80 Bluetooth v3.0 EDR Bluetooth v4.2 LE
HW Version	DVT2
EUT Stage	Identical Prototype

Accessory List	
WPC Cover	Brand Name : INCIPIO
	Model Name : MT-043-CASE

1.4 Product Details

Items	Description
Tx/Rx Frequency Range	13.553 ~ 13.567MHz
Channel Number	1
Antenna Type	Fixed Internal Antenna
Type of Modulation	ASK

Remark: The above EUT's information was declared by manufacturer. Please refer to the specifications or user's manual for more detailed description.

1.5 Modification of EUT

No modifications are made to the EUT during all test items.

1.6 Testing Location

Sporton Lab is accredited to ISO 17025 by Taiwan Accreditation Foundation (TAF code : 1190) and the FCC designation No. TW1022 under the FCC 2.948(e) by Mutual Recognition Agreement (MRA) in FCC Test.

Test Site	SPORTON INTERNATIONAL INC.	
Test Site Location	No. 52, Hwa Ya 1st Rd., Hwa Ya Technology Park, Kwei-Shan District, Tao Yuan City, Taiwan, R.O.C. TEL: +886-3-3273456 / FAX: +886-3-3284978	
Test Site No.	Sporton Site No.	
	CO05-HY	03CH07-HY
Test Engineer	Kai-Chun Chu	Jesse Wang
Temperature	23~24℃	21~23℃
Relative Humidity	44~45%	55~58%

Note: The test site complies with ANSI C63.4 2014 requirement.

1.7 Applicable Standards

According to the specifications of the manufacturer, the EUT must comply with the requirements of the following standards:

- FCC Part 15 Subpart C §15.225
- ANSI C63.10-2013

1.8 Test Modes

Investigation has been done on all the possible configurations for searching the worst cases. The following table is a list of the test modes shown in this test report.

Test Items	
AC Power Line Conducted Emissions	Field Strength of Fundamental Emissions
Radiated Emissions 9kHz~30MHz	Radiated Emissions 30MHz~1GHz

Note:

1. The EUT was programmed to be in continuously transmitting mode.
2. The ancillary equipment, NFC card, is used to make the EUT (NFC) continuously transmit at 13.56MHz and is placed around 3 cm gap to the EUT.

1.9 Test Configurations

<AC Conducted Emission with WPC Charging Mode>

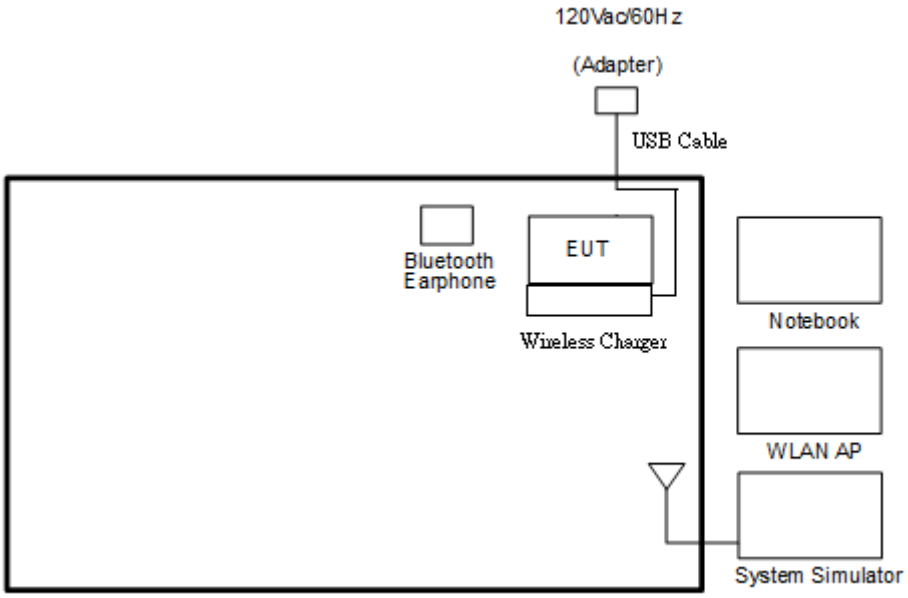

<AC Conducted Emission with PMA Charging Mode>

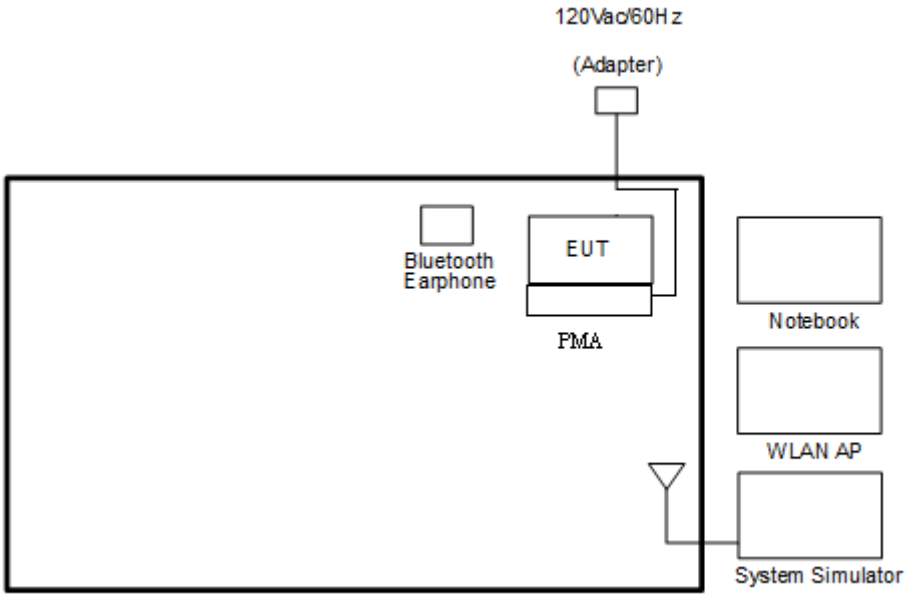

<For Fundamental Emissions and Mask and Radiated Emissions Measurement with WPC Charging Mode >

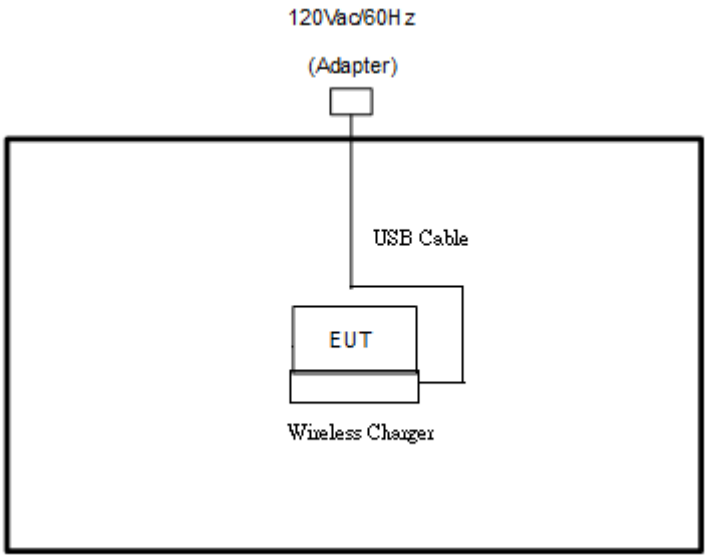

<For Fundamental Emissions and Mask and Radiated Emissions Measurement with PMA Charging Mode >

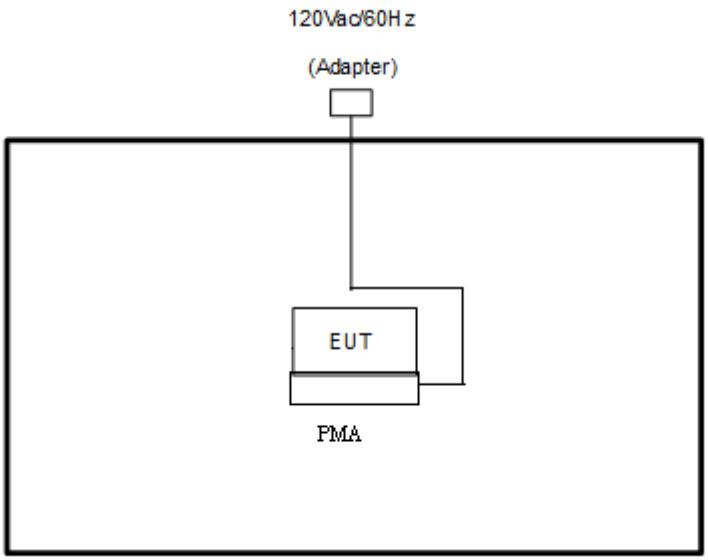

1.10 Table for Supporting Units

Support Unit	Manufacturer	Model	FCC ID
System Simulator	Anritsu	MT8820C	N/A
WLAN AP	D-Link	DIR-865L	KA2IR865LA1
Bluetooth Earphone	Sony Ericsson	MW600	PY70DA2029
Notebook	DELL	Latitude E6320	FCC DoC/ Contains FCC ID: QDS-BRCM1054
SD Card	SanDisk	MicroSD HC	FCC DoC
NFC Card	Metro Taipei	Easy Card	N/A
Wireless Charger	LG	WCD-100	FCC DoC
PMA	DURACELL	M-018B-518A	FCC DoC
USB Cable	Motorola	SKN6461A	N/A
Adapter	Motorola	SPN5865A	N/A

2. CONDUCTED EMISSION TEST

2.1 Measuring Instruments

See list of measuring instruments of this test report.

2.2 Test setup

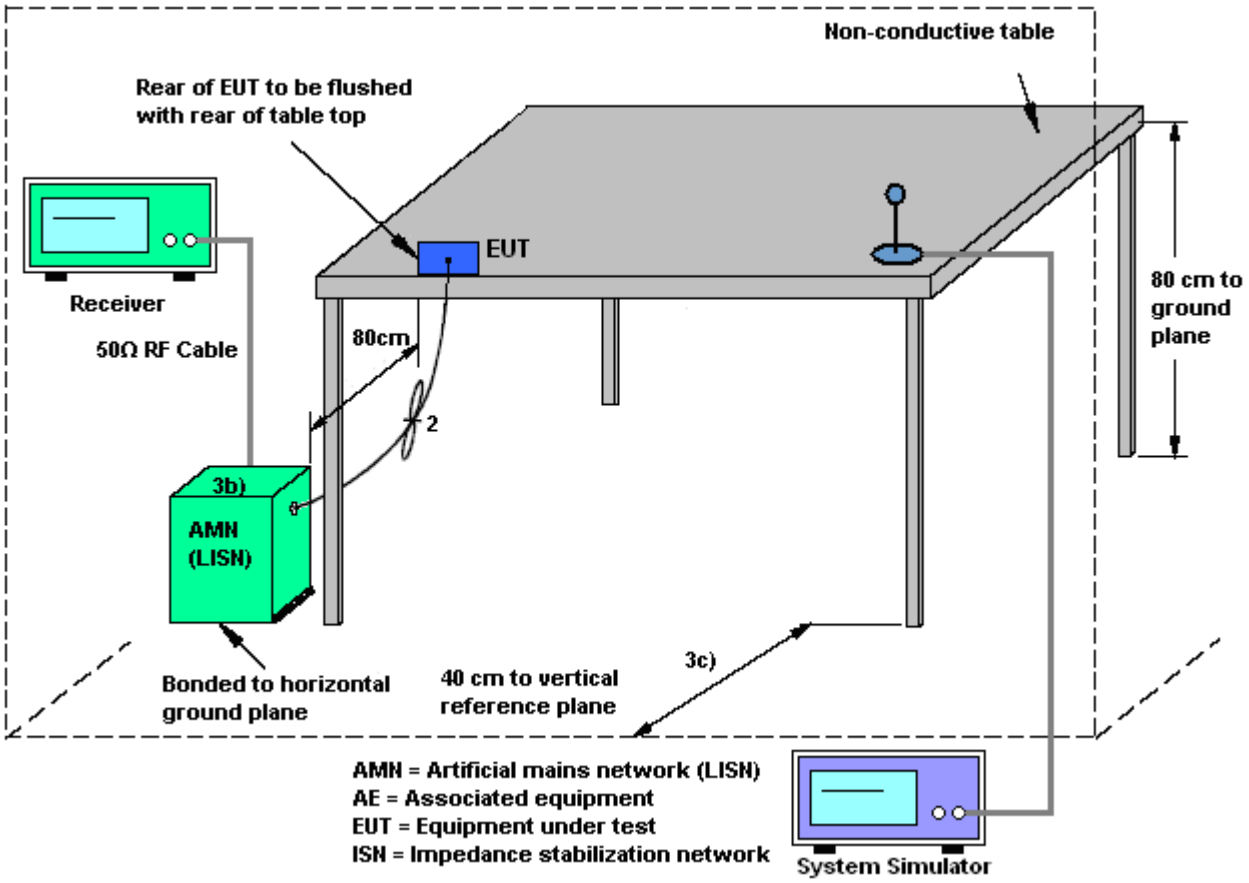

2.3 Test Result of Conducted Emission Test

Please refer to Appendix A.

2.4 AC Power Line Conducted Emissions Measurement

2.4.1 Limit

For equipment that is designed to be connected to the public utility (AC) power line, the radio frequency voltage that is conducted back onto the AC power line on any frequency or frequencies within the band 150 kHz to 30 MHz shall not exceed the limits in the following table.

Frequency of Emission (MHz)	Conducted Limit (dBμV)	
	Quasi-Peak	Average
0.15-0.5	66 to 56*	56 to 46*
0.5-5	56	46
5-30	60	50

*Decreases with the logarithm of the frequency.

2.4.2 Test Procedures

1. The EUT was placed 0.4 meter from the conducting wall of the shielding room, and it was kept at least 80 centimeters from any other grounded conducting surface.
2. Connect EUT to the power mains through a line impedance stabilization network (LISN).
3. All the support units are connecting to the other LISN.
4. The LISN provides 50 ohm coupling impedance for the measuring instrument.
5. The FCC states that a 50 ohm, 50 microhenry LISN should be used.
6. Both sides of AC line were checked for maximum conducted interference.
7. The frequency range from 150 kHz to 30 MHz was searched.
8. Set the test-receiver system to Peak Detect Function and specified bandwidth (IF Bandwidth = 9kHz) with Maximum Hold Mode. Then measurement is also conducted by Average Detector and Quasi-Peak Detector Function respectively.

3. RADIATED TEST ITEMS

3.1 Measuring Instruments

See list of measuring instruments of this test report.

3.2 Test Setup

3.2.1 For radiated emissions below 30MHz

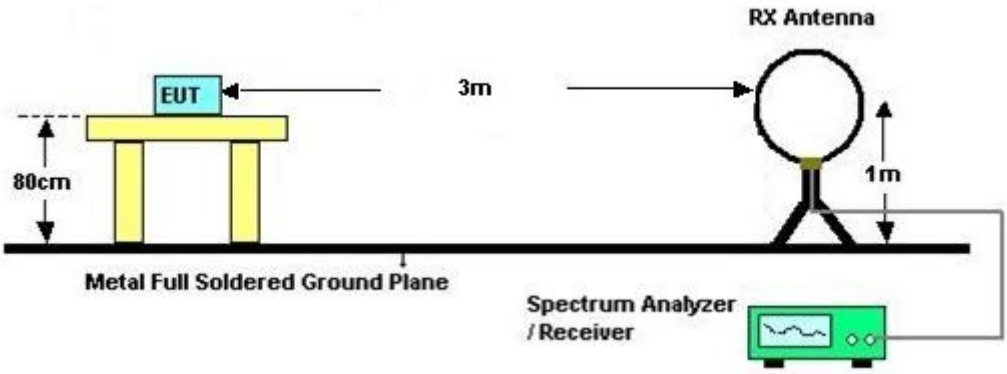

3.2.2 For radiated emissions above 30MHz

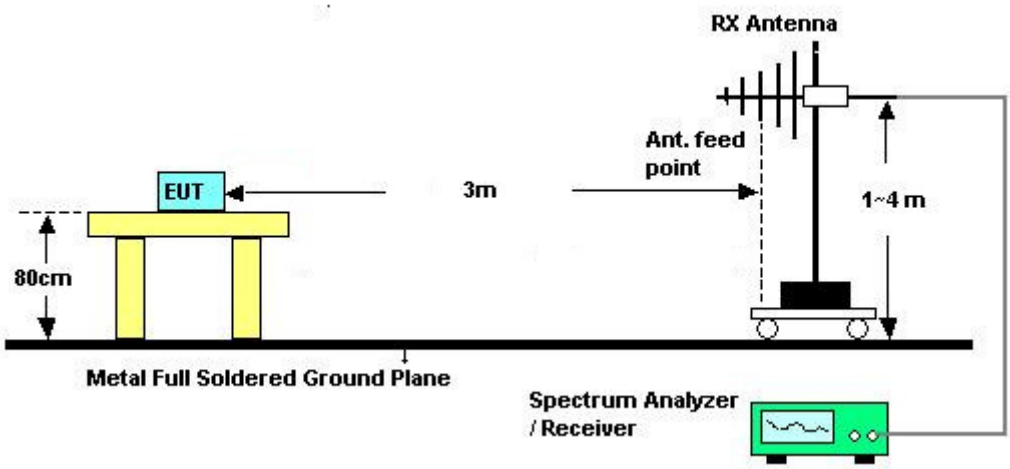

3.3 Test Result of Radiated Test Items

Please refer to Appendix B.

3.4 Field Strength of Fundamental Emissions and Mask Measurement

3.4.1 Limit

Rules and specifications	FCC CFR 47 Part 15 section 15.225 IC RSS-210 A2.6			
Description	Compliance with the spectrum mask is tested with RBW set to 9kHz.			
Freq. of Emission (MHz)	Field Strength (μV/m) at 30m	Field Strength (dBμV/m) at 30m	Field Strength (dBμV/m) at 10m	Field Strength (dBμV/m) at 3m
1.705~13.110	30	29.5	48.58	69.5
13.110~13.410	106	40.5	59.58	80.5
13.410~13.553	334	50.5	69.58	90.5
13.553~13.567	15848	84.0	103.08	124.0
13.567~13.710	334	50.5	69.58	90.5
13.710~14.010	106	40.5	59.58	80.5
14.010~30.000	30	29.5	48.58	69.5

3.4.2 Test Procedures

1. Configure the EUT according to ANSI C63.10. The EUT was placed on the top of the turntable 0.8 meter above ground. The phase center of the loop receiving antenna mounted antenna tower was placed 3 meters far away from the turntable.
2. Power on the EUT and all the supporting units. The turntable was rotated by 360 degrees to determine the position of the highest radiation.
3. The height of the receiving antenna was fixed at one meter above ground to find the maximum emissions field strength.
4. For Fundamental emissions, use the receiver to measure QP reading.
5. When the radiated emissions limits are expressed in terms of the average value of the emissions, and pulsed operation is employed, the measurement field strength shall be determined by averaging over one complete pulse train, including blanking intervals, as long as the pulse train does not exceed 0.1 seconds. As an alternative (provided the transmitter operates for longer than 0.1 seconds) or in cases where the pulse train exceeds 0.1 seconds, the measured field strength shall be determined from the average absolute voltage during a 0.1 second interval during which the field strength is at its maximum value.
6. Compliance with the spectrum mask is tested with RBW set to 9kHz.

Note: Emission level (dBμV/m) = 20 log Emission level (μV/m).

3.5 Radiated Emissions Measurement

3.5.1 Limit

The field strength of any emissions which appear outside of 13.110 ~14.010MHz band shall not exceed the general radiated emissions limits.

Frequencies (MHz)	Field Strength (μV/m)	Measurement Distance (meters)
0.009~0.490	2400/F(kHz)	300
0.490~1.705	24000/F(kHz)	30
1.705~30.0	30	30
30~88	100	3
88~216	150	3
216~960	200	3
Above 960	500	3

3.5.2 Measuring Instrument Setting

The following table is the setting of receiver.

Receiver Parameter	Setting
Attenuation	Auto
Frequency Range: 9kHz~150kHz	RBW 200Hz for QP
Frequency Range: 150kHz~30MHz	RBW 9kHz for QP
Frequency Range: 30MHz~1000MHz	RBW 120kHz for Peak

Note: The emission limits shown in the above table are based on measurements employing a CISPR quasi-peak detector except for the frequency bands 9-90 kHz, 110-490 kHz. Radiated emission limits in these two bands are based on measurements employing an average detector.

3.5.3 Test Procedures

1. Configure the EUT according to ANSI C63.10. The EUT was placed on the top of the turntable 0.8 meter above ground. The phase center of the receiving antenna mounted on the top of a height-variable antenna tower was placed 3 meters far away from the turntable.
1. Power on the EUT and all the supporting units. The turntable was rotated by 360 degrees to determine the position of the highest radiation.
2. The height of the broadband receiving antenna was varied between one meter and four meters above ground to find the maximum emissions field strength of both horizontal and vertical polarization.
3. For each suspected emissions, the antenna tower was scan (from 1 M to 4 M) and then the turntable was rotated (from 0 degree to 360 degrees) to find the maximum reading.
4. Set the test-receiver system to Peak or CISPR quasi-peak Detect Function with specified bandwidth under Maximum Hold Mode.
5. When the radiated emissions limits are expressed in terms of the average value of the emissions, and pulsed operation is employed, the measurement field strength shall be determined by averaging over one complete pulse train, including blanking intervals, as long as the pulse train does not exceed 0.1 seconds. As an alternative (provided the transmitter operates for longer than 0.1 seconds) or in cases where the pulse train exceeds 0.1 seconds, the measured field strength shall be determined from the average absolute voltage during a 0.1 second interval during which the field strength is at its maximum value.
6. In case the emission is lower than 30MHz, loop antenna has to be used for measurement and the recorded data should be QP measured by receiver. Antenna Requirements

3.5.4 Limit

Except for special regulations, the Low-power Radio-frequency Devices must not be equipped with any jacket for installing an antenna with extension cable. An intentional radiator shall be designed to ensure that no antenna other than that furnished by the responsible party shall be used with the device. The use of a permanently attached antenna or of an antenna that uses a unique coupling to the intentional radiator shall be considered sufficient to comply with the provisions of this Section. The manufacturer may design the unit so that the user can replace a broken antenna, but the use of a standard antenna jack or electrical connector is prohibited.

3.5.5 Antenna Anti-Replacement Construction

An embedded-in antenna design is used.

4. LIST OF MEASURING EQUIPMENT

Instrument	Manufacturer	Model No.	Serial No.	Characteristics	Calibration Date	Test Date	Due Date	Remark
AC Power Source	ChainTek	APC-1000W	N/A	N/A	N/A	May 23, 2016	N/A	Conduction (CO05-HY)
EMI Test Receiver	Rohde & Schwarz	ESCI 7	100724	9kHz~7GHz	Aug. 26, 2015	May 23, 2016	Aug. 25, 2016	Conduction (CO05-HY)
LISN	Rohde & Schwarz	ENV216	100080	9kHz~30MHz	Dec. 02, 2015	May 23, 2016	Dec. 01, 2016	Conduction (CO05-HY)
Bilog Antenna	TESEQ	CBL 6111D	35419	30MHz to 1GHz	Jan. 13, 2016	May 19, 2016 ~ May 21, 2016	Jan. 12, 2017	Radiation (03CH07-HY)
EMI Test Receiver	Keysight	N9038A(MXE)	MY54130085	20Hz ~ 8.4GHz	Nov. 04, 2015	May 19, 2016 ~ May 21, 2016	Nov. 03, 2016	Radiation (03CH07-HY)
Loop Antenna	Rohde & Schwarz	HFH2-Z2	100315	9 kHz~30 MHz	Sep. 02, 2015	May 19, 2016 ~ May 21, 2016	Sep. 01, 2016	Radiation (03CH07-HY)
Preamplifier	COM-POWER	PA-103A	161241	10MHz-1GHz	Mar. 18, 2016	May 19, 2016 ~ May 21, 2016	Mar. 17, 2017	Radiation (03CH07-HY)
Spectrum Analyzer	Agilent	N9010A	MY53470118	10Hz~44GHz	Feb. 27, 2016	May 19, 2016 ~ May 21, 2016	Feb. 26, 2017	Radiation (03CH07-HY)
Controller	ChainTek	Chaintek 3000	N/A	Control Turn table	N/A	May 19, 2016 ~ May 21, 2016	N/A	Radiation (03CH07-HY)
Controller	Max-Full	MF7802	MF780208368	Control Ant Mast	N/A	May 19, 2016 ~ May 21, 2016	N/A	Radiation (03CH07-HY)
Antenna Mast	Max-Full	MFA520BS	N/A	1m~4m	N/A	May 19, 2016 ~ May 21, 2016	N/A	Radiation (03CH07-HY)
Turn Table	ChainTek	Chaintek 3000	N/A	0~360 Degree	N/A	May 19, 2016 ~ May 21, 2016	N/A	Radiation (03CH07-HY)
Loop Cable	Rohde & Schwarz	N/A	N/A	9KHz~30MHz	Dec. 03, 2015	May 19, 2016 ~ May 21, 2016	Dec. 02, 2016	Radiation (03CH07-HY)

Appendix A. Test Results of Conducted Emission Test

<WPC Charging Mode>

Test Mode :	NFC Tx	Test Voltage :	120Vac / 60Hz
Function Type :	GSM850 Idle + Bluetooth Link + WLAN Link + WPC Back Cover + WPC Charging Pad + USB Cable (Charging from Adapter) + NFC Tx		

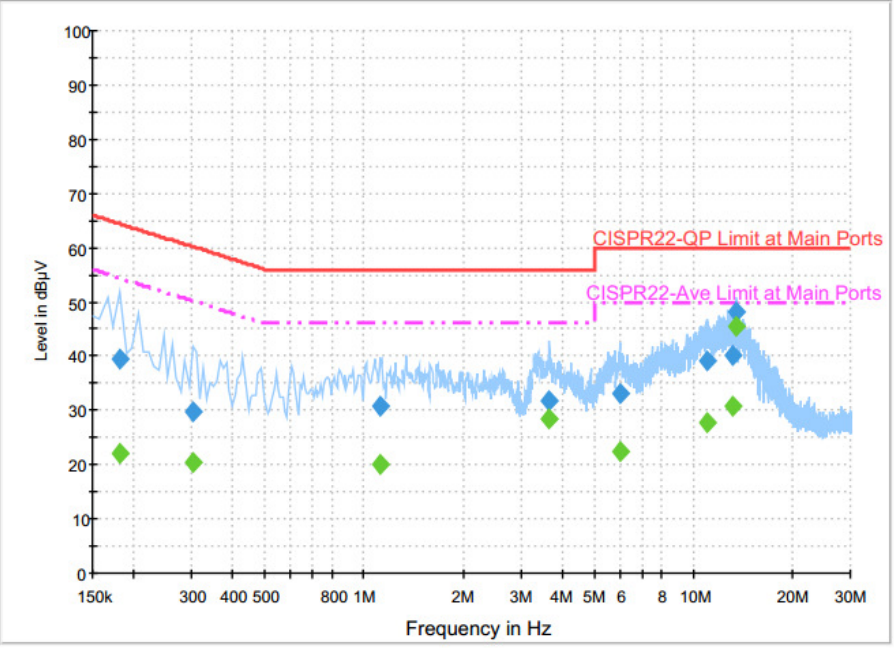

Final Result : Quasi-Peak

Frequency (MHz)	Quasi-Peak (dBµV)	Filter	Line	Corr. (dB)	Margin (dB)	Limit (dBµV)
0.182000	39.4	Off	L1	19.6	25.0	64.4
0.302000	29.7	Off	L1	19.6	30.5	60.2
1.118000	30.8	Off	L1	19.7	25.2	56.0
3.662000	31.7	Off	L1	19.8	24.3	56.0
5.982000	33.2	Off	L1	19.9	26.8	60.0
11.006000	39.2	Off	L1	20.2	20.8	60.0
13.238000	40.1	Off	L1	20.3	19.9	60.0
13.558000	48.0	Off	L1	20.3	12.0	60.0

Final Result : Average

Frequency (MHz)	Average (dBµV)	Filter	Line	Corr. (dB)	Margin (dB)	Limit (dBµV)
0.182000	21.9	Off	L1	19.6	32.5	54.4
0.302000	20.5	Off	L1	19.6	29.7	50.2
1.118000	20.1	Off	L1	19.7	25.9	46.0
3.662000	28.5	Off	L1	19.8	17.5	46.0
5.982000	22.3	Off	L1	19.9	27.7	50.0
11.006000	27.7	Off	L1	20.2	22.3	50.0
13.238000	30.8	Off	L1	20.3	19.2	50.0
13.558000	45.6	Off	L1	20.3	4.4	50.0

Test Mode :	NFC Tx	Test Voltage :	120Vac / 60Hz
Function Type :	GSM850 Idle + Bluetooth Link + WLAN Link + WPC Back Cover + WPC Charging Pad + USB Cable (Charging from Adapter) + NFC Tx		

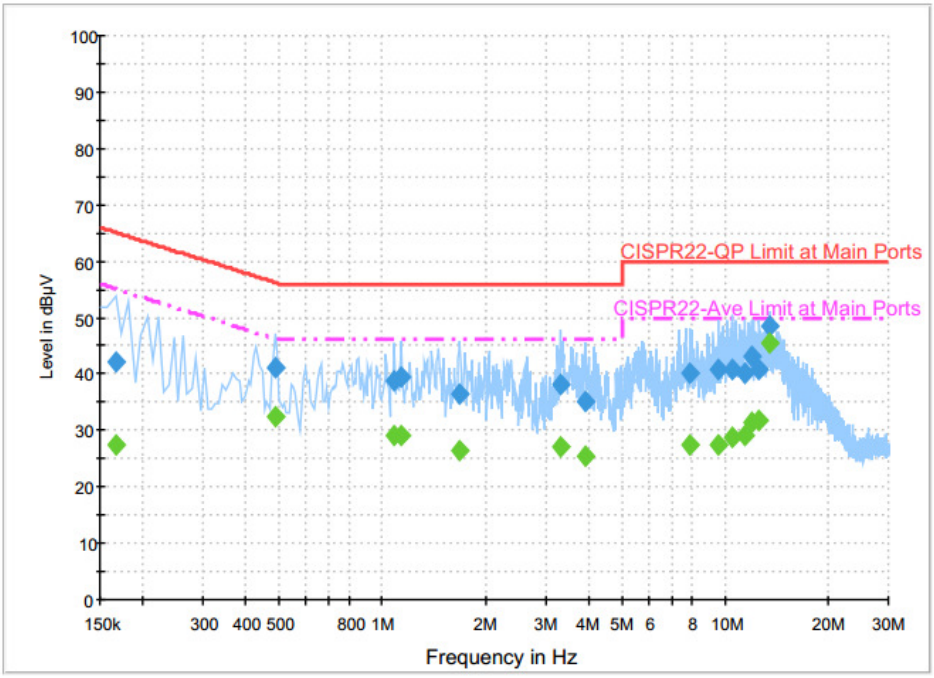

Final Result : Quasi-Peak

Frequency (MHz)	Quasi-Peak (dBµV)	Filter	Line	Corr. (dB)	Margin (dB)	Limit (dBµV)
0.166000	42.0	Off	N	19.6	23.2	65.2
0.486000	41.1	Off	N	19.6	15.1	56.2
1.086000	38.9	Off	N	19.6	17.1	56.0
1.142000	39.3	Off	N	19.6	16.7	56.0
1.686000	36.5	Off	N	19.7	19.5	56.0
3.310000	38.3	Off	N	19.7	17.7	56.0
3.910000	35.0	Off	N	19.7	21.0	56.0
7.950000	40.0	Off	N	20.0	20.0	60.0
9.574000	40.9	Off	N	20.1	19.1	60.0
10.486000	40.9	Off	N	20.1	19.1	60.0
11.454000	40.2	Off	N	20.2	19.8	60.0
12.046000	43.1	Off	N	20.2	16.9	60.0
12.654000	40.6	Off	N	20.3	19.4	60.0
13.558000	48.5	Off	N	20.3	11.5	60.0

Test Mode :	NFC Tx	Test Voltage :	120Vac / 60Hz
Function Type :	GSM850 Idle + Bluetooth Link + WLAN Link + WPC Back Cover + WPC Charging Pad + USB Cable (Charging from Adapter) + NFC Tx		

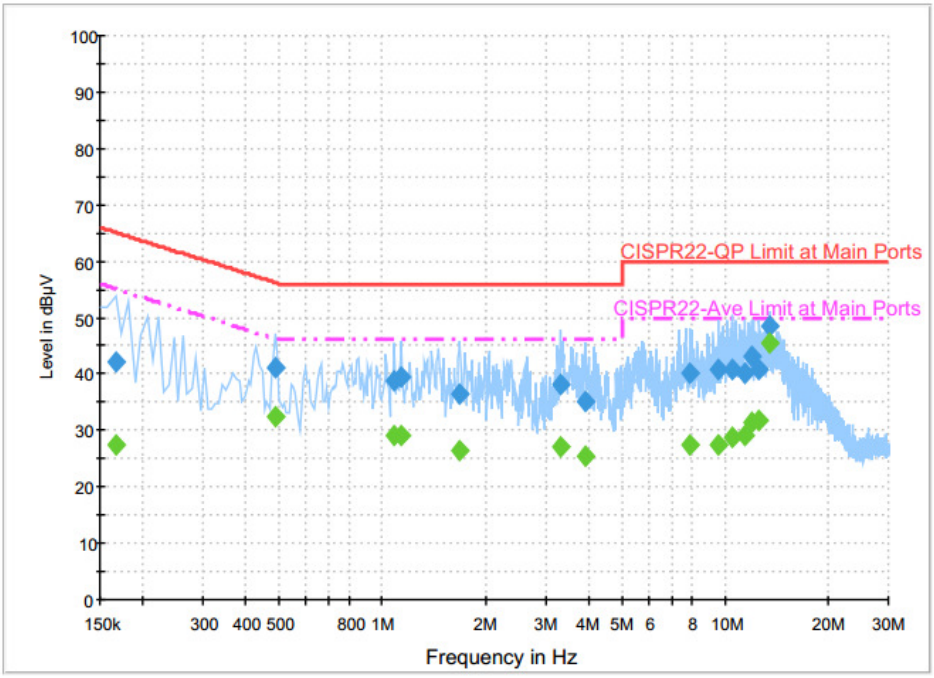

Final Result : Average

Frequency (MHz)	Average (dBµV)	Filter	Line	Corr. (dB)	Margin (dB)	Limit (dBµV)
0.166000	27.3	Off	N	19.6	27.9	55.2
0.486000	32.3	Off	N	19.6	13.9	46.2
1.086000	29.1	Off	N	19.6	16.9	46.0
1.142000	29.2	Off	N	19.6	16.8	46.0
1.686000	26.3	Off	N	19.7	19.7	46.0
3.310000	27.2	Off	N	19.7	18.8	46.0
3.910000	25.4	Off	N	19.7	20.6	46.0
7.950000	27.3	Off	N	20.0	22.7	50.0
9.574000	27.5	Off	N	20.1	22.5	50.0
10.486000	28.8	Off	N	20.1	21.2	50.0
11.454000	29.3	Off	N	20.2	20.7	50.0
12.046000	31.4	Off	N	20.2	18.6	50.0
12.654000	31.8	Off	N	20.3	18.2	50.0
13.558000	45.6	Off	N	20.3	4.4	50.0

(1) with antenna

Remark: 13.558MHz is the NFC RF fundamental signal.

(2) with dummy load

Remark: Only the fundamental NFC signal needs to be retested per C63.4.

<PMA Charging Mode>

Test Mode :	NFC Tx	Test Voltage :	120Vac / 60Hz
Function Type :	GSM850 Idle + Bluetooth Link + WLAN Link + WPC Back cover + PMA Charging Pad + Adapter + NFC Tx		

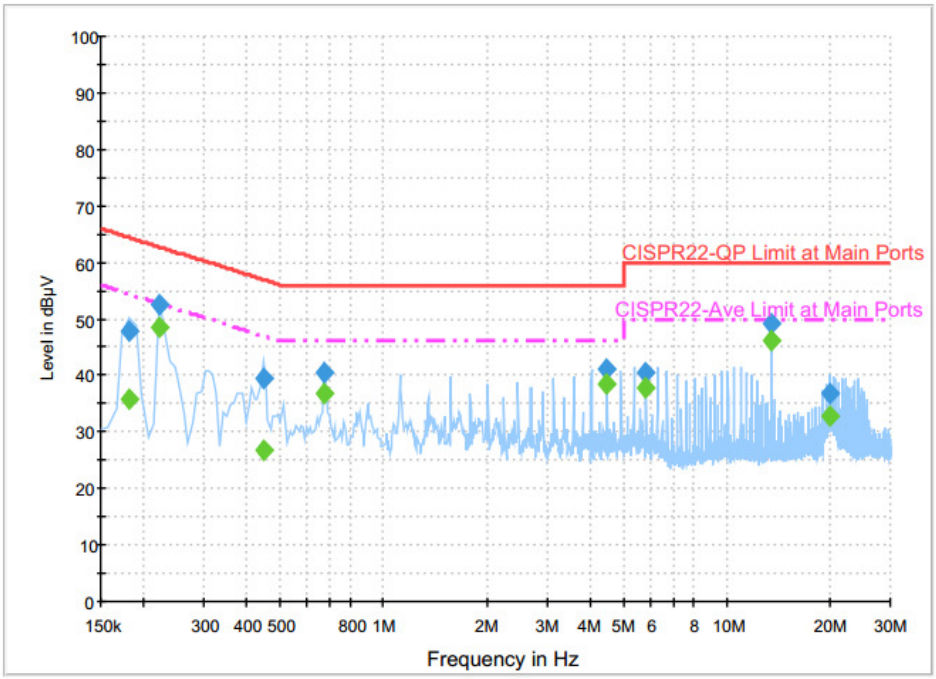

Final Result : Quasi-Peak

Frequency (MHz)	Quasi-Peak (dBµV)	Filter	Line	Corr. (dB)	Margin (dB)	Limit (dBµV)
0.182000	47.8	Off	L1	19.6	16.6	64.4
0.222000	52.3	Off	L1	19.6	10.4	62.7
0.446000	39.4	Off	L1	19.6	17.5	56.9
0.670000	40.6	Off	L1	19.6	15.4	56.0
4.486000	41.2	Off	L1	19.8	14.8	56.0
5.830000	40.4	Off	L1	19.9	19.6	60.0
13.558000	49.0	Off	L1	20.3	11.0	60.0
19.950000	36.7	Off	L1	20.7	23.3	60.0

Final Result : Average

Frequency (MHz)	Average (dBµV)	Filter	Line	Corr. (dB)	Margin (dB)	Limit (dBµV)
0.182000	35.8	Off	L1	19.6	18.6	54.4
0.222000	48.5	Off	L1	19.6	4.2	52.7
0.446000	26.8	Off	L1	19.6	20.1	46.9
0.670000	36.9	Off	L1	19.6	9.1	46.0
4.486000	38.6	Off	L1	19.8	7.4	46.0
5.830000	37.8	Off	L1	19.9	8.2	50.0
13.558000	46.1	Off	L1	20.3	3.9	50.0
19.950000	32.9	Off	L1	20.7	17.1	50.0

Test Mode :	NFC Tx	Test Voltage :	120Vac / 60Hz
Function Type :	GSM850 Idle + Bluetooth Link + WLAN Link + WPC Back cover + PMA Charging Pad + Adapter + NFC Tx		

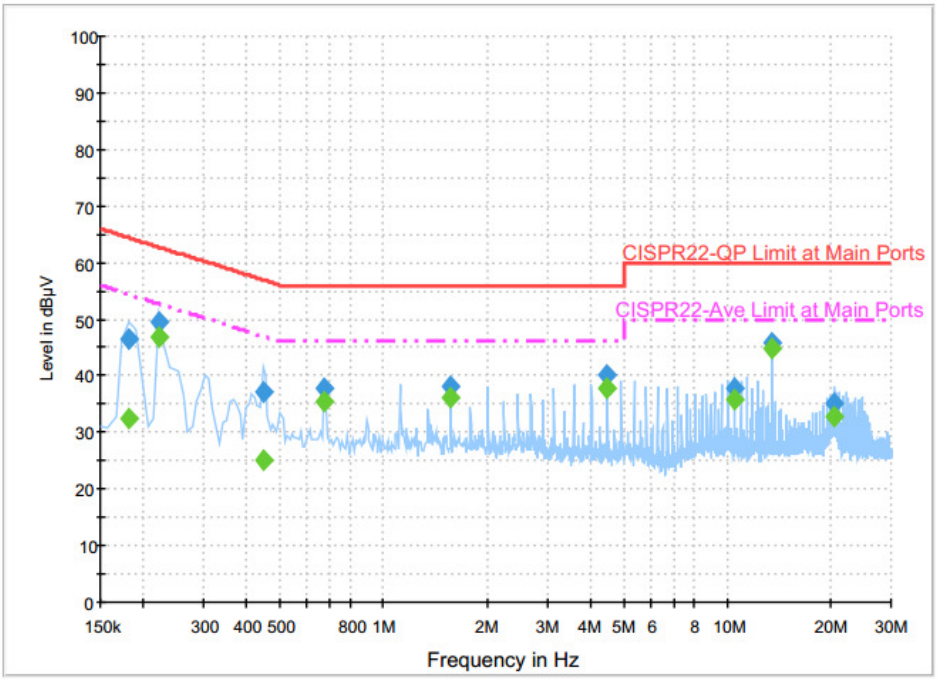

Final Result : Quasi-Peak

Frequency (MHz)	Quasi-Peak (dBµV)	Filter	Line	Corr. (dB)	Margin (dB)	Limit (dBµV)
0.182000	46.3	Off	N	19.6	18.1	64.4
0.222000	49.4	Off	N	19.6	13.3	62.7
0.446000	37.0	Off	N	19.6	19.9	56.9
0.670000	37.7	Off	N	19.6	18.3	56.0
1.566000	38.1	Off	N	19.7	17.9	56.0
4.478000	40.0	Off	N	19.8	16.0	56.0
10.534000	37.8	Off	N	20.1	22.2	60.0
13.558000	45.9	Off	N	20.3	14.1	60.0
20.390000	35.0	Off	N	20.8	25.0	60.0

Test Mode :	NFC Tx	Test Voltage :	120Vac / 60Hz
Function Type :	GSM850 Idle + Bluetooth Link + WLAN Link + WPC Back cover + PMA Charging Pad + Adapter + NFC Tx		

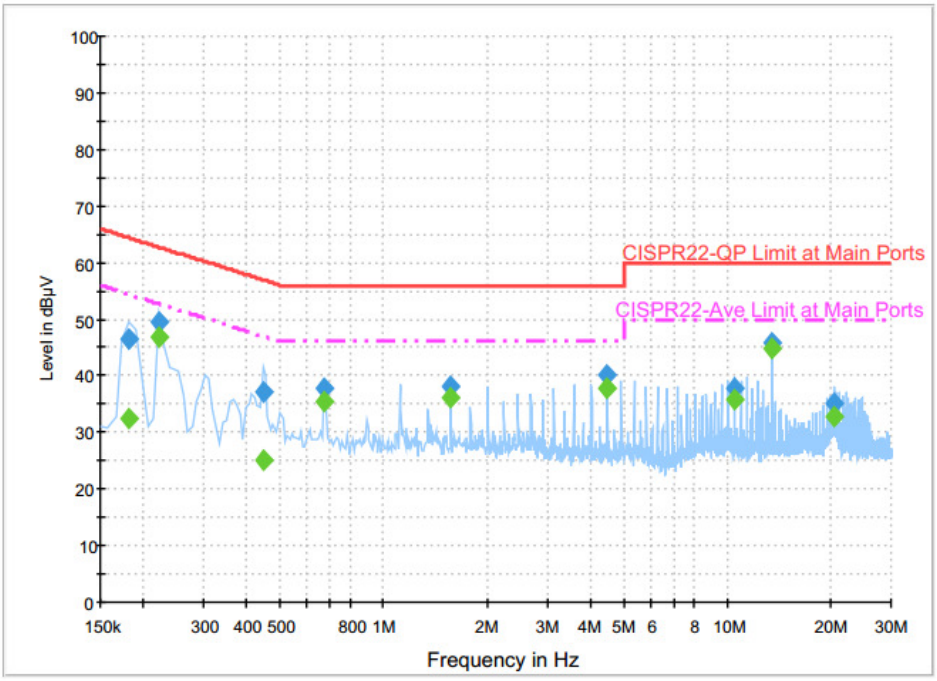

Final Result : Average

Frequency (MHz)	Average (dBµV)	Filter	Line	Corr. (dB)	Margin (dB)	Limit (dBµV)
0.182000	32.5	Off	N	19.6	21.9	54.4
0.222000	46.9	Off	N	19.6	5.8	52.7
0.446000	25.1	Off	N	19.6	21.8	46.9
0.670000	35.6	Off	N	19.6	10.4	46.0
1.566000	36.0	Off	N	19.7	10.0	46.0
4.478000	37.8	Off	N	19.8	8.2	46.0
10.534000	35.7	Off	N	20.1	14.3	50.0
13.558000	44.9	Off	N	20.3	5.1	50.0
20.390000	32.8	Off	N	20.8	17.2	50.0

(1) with antenna

Remark: 13.558MHz is the NFC RF fundamental signal.

(2) with dummy load

Remark: Only the fundamental NFC signal needs to be retested per C63.4.

Appendix B. Test Results of Radiated Test Items

B.1 Test Result of Field Strength of Fundamental Emissions

<WPC Charging Mode>

Test Mode :	NFC Tx	Test Frequency (MHz)	13.56

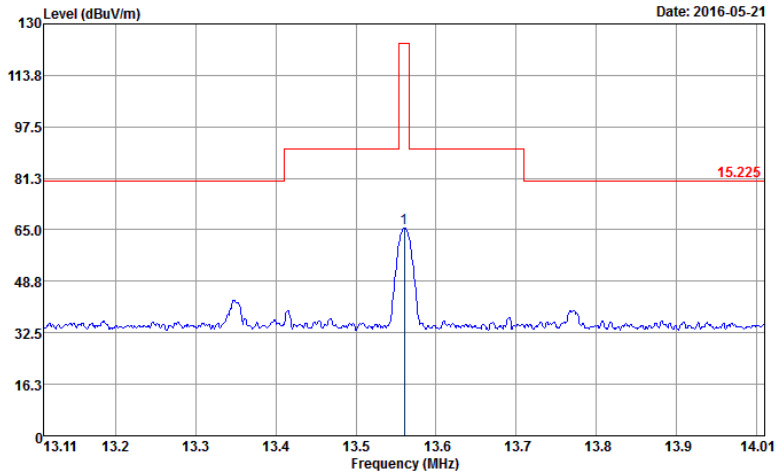

Site : 03CH07-HY
Condition : 15.225 3m LOOP_ANT(H) HORIZONTAL
: RBW:9.000KHz VBW:9.000KHz SWT:Auto
Project : 640145-15
Mode : 1

	Freq	Level	Over Limit	Limit Line	Read Level	Antenna Factor	Cable Loss	A/Pos	T/Pos	Remark
	MHz	dBuV/m	dB	dBuV/m	dBuV	dB/m	dB	cm	deg	
1	13.56	65.56	-58.44	124.00	44.83	20.05	0.68	100	360	QP

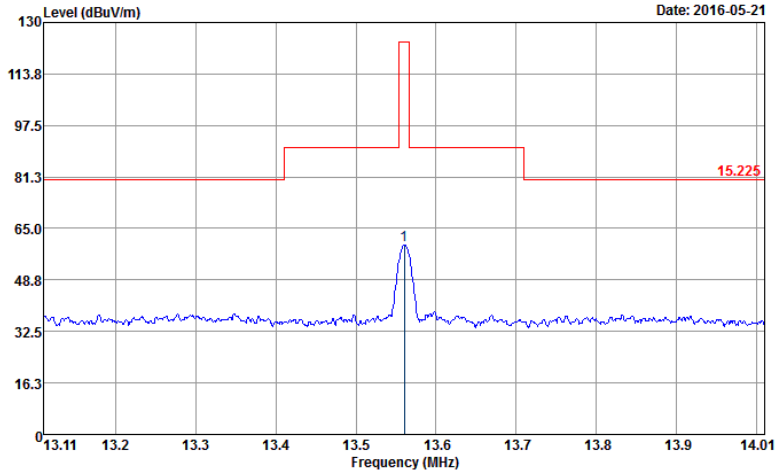

Site : 03CH07-HY
Condition : 15.225 3m LOOP_ANT(V) VERTICAL
: RBW:9.000KHz VBW:9.000KHz SWT:Auto
Project : 640145-15
Mode : 1

	Freq	Level	Over Limit	Limit Line	Read Level	Antenna Factor	Cable Loss	A/Pos	T/Pos	Remark
	MHz	dBuV/m	dB	dBuV/m	dBuV	dB/m	dB	cm	deg	
1	13.56	59.85	-64.15	124.00	39.12	20.05	0.68	100	86	QP

Note: All NFC's spurious emissions are below 20dB of limits.

<PMA Charging Mode>

Test Mode :	NFC Tx	Test Frequency (MHz)	13.56

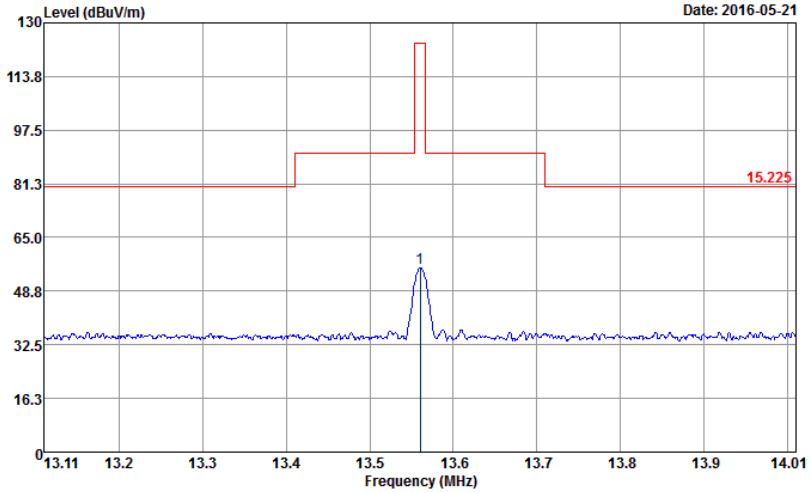

Site : 03CH07-HY
Condition : 15.225 3m LOOP_ANT(H) HORIZONTAL
: RBW:9.000KHz VBW:9.000KHz SWT:Auto
Project : 640145-15
Mode : 1

	Freq	Level	Over Limit	Limit Line	Read Level	Antenna Factor	Cable Loss	A/Pos	T/Pos	Remark
	MHz	dBuV/m	dB	dBuV/m	dBuV	dB/m	dB	cm	deg	
1	13.56	55.78	-68.22	124.00	35.05	20.05	0.68	100	84	QP

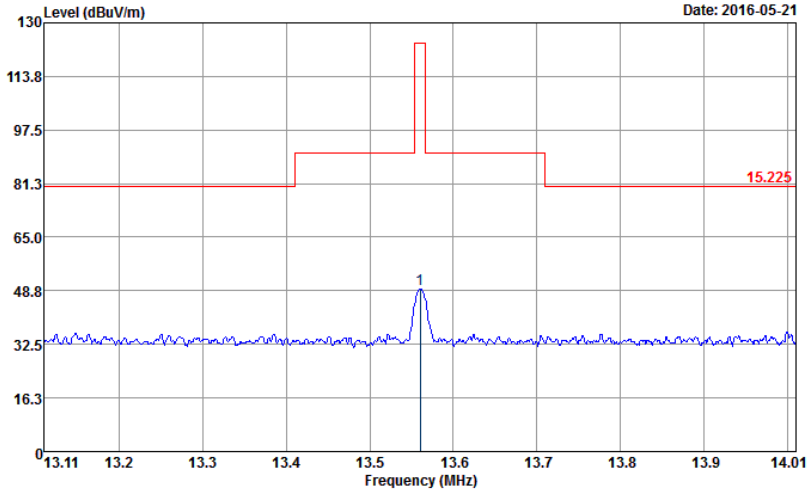

Site : 03CH07-HY
Condition : 15.225 3m LOOP_ANT(V) VERTICAL
: RBW:9.000KHz VBW:9.000KHz SWT:Auto
Project : 640145-15
Mode : 1

	Freq	Level	Over Limit	Limit Line	Read Level	Antenna Factor	Cable Loss	A/Pos	T/Pos	Remark
	MHz	dBuV/m	dB	dBuV/m	dBuV	dB/m	dB	cm	deg	
1	13.56	49.22	-74.78	124.00	28.49	20.05	0.68	100	24	QP

Note: All NFC's spurious emissions are below 20dB of limits.

B.2 Results of Radiated Emissions (9 kHz~30MHz)

<WPC Charging Mode>

Test Mode :	NFC Tx	Polarization :	Horizontal

Frequency (MHz)	Level (dBμV/m)	Over Limit (dB)	Limit Line (dBμV/m)	Read Level (dBμV)	Antenna Factor (dB)	Cable Loss (dB)	Ant Pos (cm)	Table Pos (deg)	Remark
0.04434	62.98	-51.69	114.67	42.21	20.09	0.68	-	-	Average
0.07875	55.21	-54.47	109.68	34.49	20.04	0.68	-	-	Average
0.10286	50.61	-56.75	107.36	29.94	19.99	0.68	-	-	QP
0.1348	47.64	-57.37	105.01	26.99	19.97	0.68	-	-	Average
0.35944	51.11	-45.38	96.49	30.52	19.91	0.68	-	-	Average
1.023	42.36	-25.04	67.4	21.77	19.91	0.68	100	0	QP
13.56	65.56	-3.94	69.5	44.83	20.05	0.68	-	-	QP
14.152	36.19	-33.31	69.5	15.46	20.05	0.68	-	-	QP
22.912	36.92	-32.58	69.5	15.29	20.56	1.07	-	-	QP
29.095	36.17	-33.33	69.5	14.62	20.48	1.07	-	-	QP

Test Mode :	NFC Tx	Polarization :	Vertical

Frequency (MHz)	Level (dBμV/m)	Over Limit (dB)	Limit Line (dBμV/m)	Read Level (dBμV)	Antenna Factor (dB)	Cable Loss (dB)	Ant Pos (cm)	Table Pos (deg)	Remark
0.01308	55.09	-70.18	125.27	34.16	20.25	0.68	-	-	Average
0.06249	37.59	-74.1	111.69	16.87	20.04	0.68	-	-	Average
0.09148	51.73	-56.65	108.38	31.06	19.99	0.68	-	-	QP
0.11328	34.44	-72.08	106.52	13.77	19.99	0.68	-	-	Average
0.1772	51.78	-50.85	102.63	31.17	19.93	0.68	-	-	Average
1.061	44.37	-22.72	67.09	23.78	19.91	0.68	100	0	QP
9.2	35.75	-33.75	69.5	15.08	19.99	0.68	-	-	QP
13.56	59.85	-9.65	69.5	39.12	20.05	0.68	-	-	QP
19.501	37.26	-32.24	69.5	16.21	20.37	0.68	-	-	QP
27.1	38.15	-31.35	69.5	16.45	20.63	1.07	-	-	QP

Note:

1. 13.56 MHz is fundamental signal which can be ignored.
2. The amplitude of spurious emissions which are attenuated by more than 20dB below the permissible value has no need to be reported.
3. Distance extrapolation factor = 40 log (specific distance / test distance) (dB);
4. Limit line = specific limits (dBμV) + distance extrapolation factor.

<PMA Charging Mode>

Test Mode :	NFC Tx	Polarization :	Horizontal

Frequency (MHz)	Level (dBμV/m)	Over Limit (dB)	Limit Line (dBμV/m)	Read Level (dBμV)	Antenna Factor (dB)	Cable Loss (dB)	Ant Pos (cm)	Table Pos (deg)	Remark
0.04761	54.19	-59.86	114.05	33.42	20.09	0.68	-	-	Average
0.07131	48.42	-62.12	110.54	27.7	20.04	0.68	-	-	Average
0.0911	54.4	-54.01	108.41	33.73	19.99	0.68	-	-	QP
0.12152	42.06	-63.85	105.91	21.41	19.97	0.68	-	-	Average
0.27104	53.78	-45.16	98.94	33.18	19.92	0.68	-	-	Average
0.77538	49.71	-20.1	69.81	29.13	19.9	0.68	100	0	QP
13.336	35.84	-33.66	69.5	15.11	20.05	0.68	-	-	QP
13.56	55.78	-13.72	69.5	35.05	20.05	0.68	-	-	QP
23.821	34.81	-34.69	69.5	13.17	20.57	1.07	-	-	QP
29.345	34.83	-34.67	69.5	13.33	20.43	1.07	-	-	QP

Test Mode :	NFC Tx	Polarization :	Vertical

Frequency (MHz)	Level (dBμV/m)	Over Limit (dB)	Limit Line (dBμV/m)	Read Level (dBμV)	Antenna Factor (dB)	Cable Loss (dB)	Ant Pos (cm)	Table Pos (deg)	Remark
0.05317	46.58	-66.51	113.09	25.81	20.09	0.68	-	-	Average
0.08913	47.76	-60.84	108.6	27.09	19.99	0.68	-	-	Average
0.10082	47.59	-59.94	107.53	26.92	19.99	0.68	-	-	QP
0.11812	45.24	-60.92	106.16	24.59	19.97	0.68	-	-	Average
0.15544	48.32	-55.45	103.77	27.69	19.95	0.68	-	-	Average
0.61016	51.72	-20.18	71.9	31.14	19.9	0.68	100	0	QP
13.56	49.22	-20.28	69.5	28.49	20.05	0.68	-	-	QP
14.392	33.88	-35.62	69.5	13.15	20.05	0.68	-	-	QP
23.191	35	-34.5	69.5	13.37	20.56	1.07	-	-	QP
28.995	34.87	-34.63	69.5	13.3	20.5	1.07	-	-	QP

Note:

1. 13.56 MHz is fundamental signal which can be ignored.
2. The amplitude of spurious emissions which are attenuated by more than 20dB below the permissible value has no need to be reported.
3. Distance extrapolation factor = 40 log (specific distance / test distance) (dB);
   Limit line = specific limits (dBμV) + distance extrapolation factor.

B.3 Results of Radiated Emissions (30MHz~1GHz)

<WPC Charging Mode>

Test Mode :	NFC Tx	Polarization :	Horizontal

Frequency (MHz)	Level (dBμV/m)	Over Limit (dB)	Limit Line (dBμV/m)	Read Level (dBμV)	Antenna Factor (dB)	Cable Loss (dB)	Preamp Factor (dB)	Ant Pos (cm)	Table Pos (deg)	Remark
30	27.81	-12.19	40	32.09	26	1.07	31.35	-	-	Peak
94.8	35.52	-7.98	43.5	50.02	15.75	1.28	31.53	100	0	Peak
235.2	30.09	-15.91	46	41.75	17.68	2.07	31.41	-	-	Peak
816.6	31.93	-14.07	46	30.58	28.03	3.9	30.58	-	-	Peak
849.5	32.66	-13.34	46	30.43	28.7	4.1	30.57	-	-	Peak
926.5	33.2	-12.8	46	29.97	29.64	4.12	30.53	-	-	Peak

Test Mode :	NFC Tx	Polarization :	Vertical

Frequency (MHz)	Level (dBμV/m)	Over Limit (dB)	Limit Line (dBμV/m)	Read Level (dBμV)	Antenna Factor (dB)	Cable Loss (dB)	Preamp Factor (dB)	Ant Pos (cm)	Table Pos (deg)	Remark
40.8	36.8	-3.2	40	47.38	19.84	1.07	31.49	100	0	Peak
94.8	38.84	-4.66	43.5	53.34	15.75	1.28	31.53	-	-	Peak
285.42	22.44	-23.56	46	31.92	19.5	2.32	31.3	-	-	Peak
799.8	30.87	-15.13	46	29.86	27.7	3.9	30.59	-	-	Peak
841.8	33.41	-12.59	46	31.34	28.54	4.1	30.57	-	-	Peak
920.9	33.48	-12.52	46	30.41	29.49	4.12	30.54	-	-	Peak

Note:

1. The amplitude of spurious emissions which are attenuated by more than 20dB below the permissible value has no need to be reported.
2. Emission level (dBμV/m) = 20 log Emission level (μV/m).
3. Corrected Reading: Antenna Factor + Cable Loss + Read Level - Preamp Factor= Level.

<PMA Charging Mode>

Test Mode :	NFC Tx	Polarization :	Horizontal

Frequency (MHz)	Level (dBμV/m)	Over Limit (dB)	Limit Line (dBμV/m)	Read Level (dBμV)	Antenna Factor (dB)	Cable Loss (dB)	Preamp Factor (dB)	Ant Pos (cm)	Table Pos (deg)	Remark
30.81	27.79	-12.21	40	32.62	25.46	1.07	31.36	-	-	Peak
94.8	34.03	-9.47	43.5	48.53	15.75	1.28	31.53	100	0	Peak
234.12	23.92	-22.08	46	35.74	17.52	2.07	31.41	-	-	Peak
841.8	32.81	-13.19	46	30.74	28.54	4.1	30.57	-	-	Peak
923	32.63	-13.37	46	29.49	29.56	4.12	30.54	-	-	Peak
954.5	33.57	-12.43	46	29.82	30.21	4.07	30.53	-	-	Peak

Test Mode :	NFC Tx	Polarization :	Vertical

Frequency (MHz)	Level (dBμV/m)	Over Limit (dB)	Limit Line (dBμV/m)	Read Level (dBμV)	Antenna Factor (dB)	Cable Loss (dB)	Preamp Factor (dB)	Ant Pos (cm)	Table Pos (deg)	Remark
56.46	35.9	-4.1	40	53.18	13.24	1.07	31.59	100	0	Peak
206.31	35.54	-7.96	43.5	48.95	16.19	1.87	31.47	-	-	Peak
225.48	29.69	-16.31	46	42.17	16.88	2.07	31.43	-	-	Peak
807.5	31.83	-14.17	46	30.66	27.86	3.9	30.59	-	-	Peak
873.3	33.1	-12.9	46	30.64	28.84	4.17	30.55	-	-	Peak
905.5	33.4	-12.6	46	30.68	29.14	4.12	30.54	-	-	Peak

Note:

1. The amplitude of spurious emissions which are attenuated by more than 20dB below the permissible value has no need to be reported.
2. Emission level (dBμV/m) = 20 log Emission level (μV/m).
3. Corrected Reading: Antenna Factor + Cable Loss + Read Level - Preamp Factor= Level.

Appendix C. Original Report

Please refer to Sporton report number FR640145F as below.

FCC RF Test Report

APPLICANT	:	Motorola Mobility, LLC
EQUIPMENT	:	Mobile Cellular Phone
BRAND NAME	:	Motorola
MODEL NAME	:	6574
FCC ID	:	IHDT56VB2
STANDARD	:	FCC Part 15 Subpart C §15.225
CLASSIFICATION	:	(DXX) Low Power Communication Device Transmitter

The testing was completed on May 11, 2016. We, SPORTON INTERNATIONAL INC., would like to declare that the tested sample has been evaluated in accordance with the test procedures and has been in compliance with the applicable technical standards.

The test results in this report apply exclusively to the tested model / sample. Without written approval of SPORTON INTERNATIONAL INC., the test report shall not be reproduced except in full.

Reviewed by: Joseph Lin / Supervisor

Approved by: Jones Tsai / Manager

Testing Laboratory 1190

SPORTON INTERNATIONAL INC.

No. 52, Hwa Ya 1st Rd., Hwa Ya Technology Park, Kwei-Shan District, Tao Yuan City, Taiwan, R.O.C.

Table of Contents

SUMMARY OF THE TEST RESULT 4

1. GENERAL INFORMATION 5

1.1 Applicant 5
1.2 Manufacturer 5
1.3 Feature of Equipment Under Test 5
1.4 Product Details 6
1.5 Modification of EUT 6
1.6 Testing Location 7
1.7 Applicable Standards 7
1.8 Test Modes 8
1.9 Test Configurations 9
1.10 Table for Supporting Units 10

2. CONDUCTED EMISSION TEST 11

2.1 Measuring Instruments 11
2.2 Test setup 11
2.3 Test Result of Conducted Emission Test 11
2.4 AC Power Line Conducted Emissions Measurement 12

3. CONDUCTED TEST ITEMS 13

3.1 Measuring Instruments 13
3.2 Test Setup 13
3.3 Test Result of Conducted Test Items 13
3.4 20dB and 99% OBW Spectrum Bandwidth Measurement 14
3.5 Frequency Stability Measurement 14

4. RADIATED TEST ITEMS 15

4.1 Measuring Instruments 15
4.2 Test Setup 15
4.3 Test Result of Radiated Test Items 15
4.4 Field Strength of Fundamental Emissions and Mask Measurement 16
4.5 Radiated Emissions Measurement 17

5. LIST OF MEASURING EQUIPMENT 19

APPENDIX A. TEST RESULTS OF CONDUCTED EMISSION TEST

APPENDIX B. TEST RESULTS OF CONDUCTED TEST ITEMS

B.1.Test Result of 20dB Spectrum Bandwidth
B.2 Test Result of Frequency Stability

APPENDIX C. TEST RESULTS OF RADIATED TEST ITEMS

C.1 Test Result of Field Strength of Fundamental Emissions
C.2 Results of Radiated Emissions (9 kHz~30MHz)
C.3 Results of Radiated Emissions (30MHz~1GHz)

REVISION HISTORY

REPORT NO.	VERSION	DESCRIPTION	ISSUED DATE
FR640145F	Rev. 01	Initial issue of report	May 12, 2016

SUMMARY OF THE TEST RESULT

Applied Standard: 47 CFR FCC Part 15 Subpart C				
Part	**FCC Rule**	**Description of Test**	**Result**	**Under Limit**
3.1	15.207	AC Power Line Conducted Emissions	Complies	3.00 dB at 13.558MHz
3.2	15.225(a)(b)(c)	Field Strength of Fundamental Emissions	Complies	67.45 dB at 13.560 MHz
3.3	2.1049	20dB Spectrum Bandwidth	Complies	-
3.3	-	99% OBW Spectrum Bandwidth	Complies	-
3.4	15.225(d) 15.209	Radiated Emissions	Complies	11.40 dB at 79.950 MHz
3.5	15.225(e)	Frequency Stability	Complies	-
3.6	15.203	Antenna Requirements	Complies	-

Test Items	Uncertainty	Remark
AC Power Line Conducted Emissions	±2.26dB	Confidence levels of 95%
Radiated Emissions (30MHz~1000MHz)	±4.80dB	Confidence levels of 95%

1. GENERAL INFORMATION

1.1 Applicant

Motorola Mobility, LLC

222 W Merchandise Mart Plaza, Suite 1800, Chicago, IL 60654, United States

1.2 Manufacturer

Motorola Mobility, LLC

222 W Merchandise Mart Plaza, Suite 1800, Chicago, IL 60654, United States

1.3 Feature of Equipment Under Test

Product Feature	
Equipment	Mobile Cellular Phone
Brand Name	Motorola
FCC Model Name	6574
FCC ID	IHDT56VB2
IMEI Code	354108070054047 354108070054146
EUT supports Radios application	CDMA/EV-DO/GSM/EGPRS/WCDMA/HSPA/LTE/NFC 2.4GHz: WLAN 11b/g/n HT20, WLAN 11ac VHT20 5GHz: WLAN 11a/n HT20/HT40, WLAN 11ac VHT20/VHT40/VHT80 Bluetooth v3.0 EDR Bluetooth v4.2 - LE
HW Version	DVT2
EUT Stage	Identical Prototype

Accessory List	
AC Adapter	Brand Name : Motorola
	Model Name : SPN5912A

1.4 Product Details

Items	Description
Tx/Rx Frequency Range	13.553 ~ 13.567MHz
Channel Number	1
20dBW	2.64KHz
99%OBW	2.24KHz
Antenna Type	Fixed Internal Antenna
Type of Modulation	ASK

Remark: The above EUT's information was declared by manufacturer. Please refer to the specifications or user's manual for more detailed description.

1.5 Modification of EUT

No modifications are made to the EUT during all test items.

1.6 Testing Location

Sporton Lab is accredited to ISO 17025 by Taiwan Accreditation Foundation (TAF code : 1190) and the FCC designation No. TW1022 under the FCC 2.948(e) by Mutual Recognition Agreement (MRA) in FCC Test.

Test Site	SPORTON INTERNATIONAL INC.	
Test Site Location	No. 52, Hwa Ya 1st Rd., Hwa Ya Technology Park, Kwei-Shan District, Tao Yuan City, Taiwan, R.O.C. TEL: +886-3-3273456 / FAX: +886-3-3284978	
Test Site No.	**Sporton Site No.**	
	TH03-HY	CO05-HY
Test Engineer	Tommy Lee	Eric Jeng
Temperature	22~24℃	21~23℃
Relative Humidity	53~55%	52~55%

Note: The test site complies with ANSI C63.4 2014 requirement.

Test Site	SPORTON INTERNATIONAL INC.
Test Site Location	No. 52, Hwa Ya 1st Rd., Hwa Ya Technology Park, Kwei-Shan District, Tao Yuan City, Taiwan, R.O.C. TEL: +886-3-3273456 / FAX: +886-3-3284978
Test Site No.	**Sporton Site No.**
	03CH11-HY
Test Engineer	J.C. Liang and Bill Chang
Temperature	21~23℃
Relative Humidity	55~58%

Note: The test site complies with ANSI C63.4 2014 requirement.

1.7 Applicable Standards

According to the specifications of the manufacturer, the EUT must comply with the requirements of the following standards:

- FCC Part 15 Subpart C §15.225
- ANSI C63.10-2013

1.8 Test Modes

Investigation has been done on all the possible configurations for searching the worst cases. The following table is a list of the test modes shown in this test report.

Test Items	
AC Power Line Conducted Emissions	Field Strength of Fundamental Emissions
20dB Spectrum Bandwidth	Frequency Stability
Radiated Emissions 9kHz~30MHz	Radiated Emissions 30MHz~1GHz

Note:

1. The EUT was programmed to be in continuously transmitting mode.
2. The ancillary equipment, NFC card, is used to make the EUT (NFC) continuously transmit at 13.56MHz and is placed around 3 cm gap to the EUT.

1.9 Test Configurations

<AC Conducted Emissions>

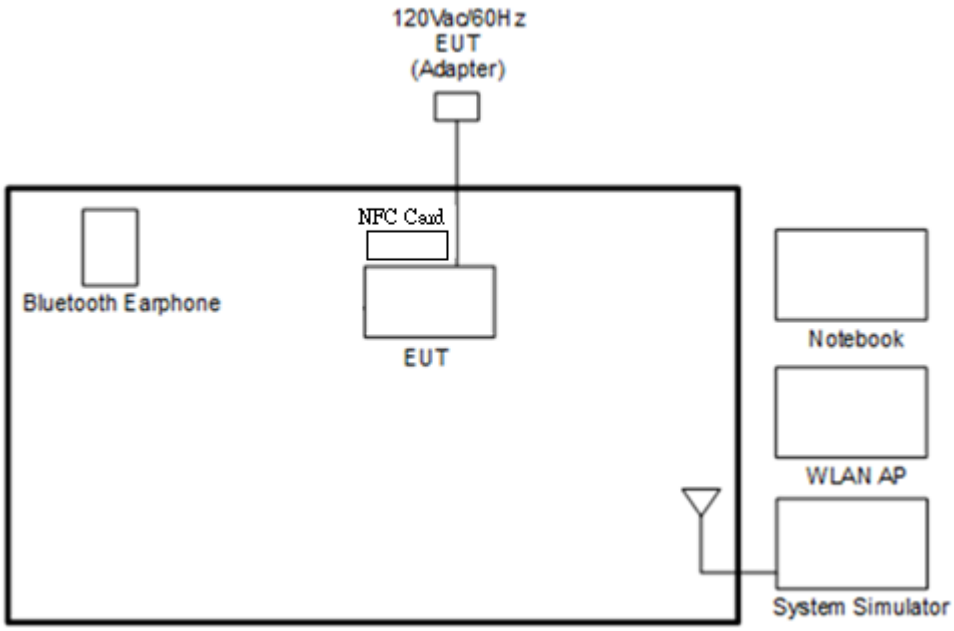

< For Fundamental Emissions and Mask and Radiated Emissions Measurement >

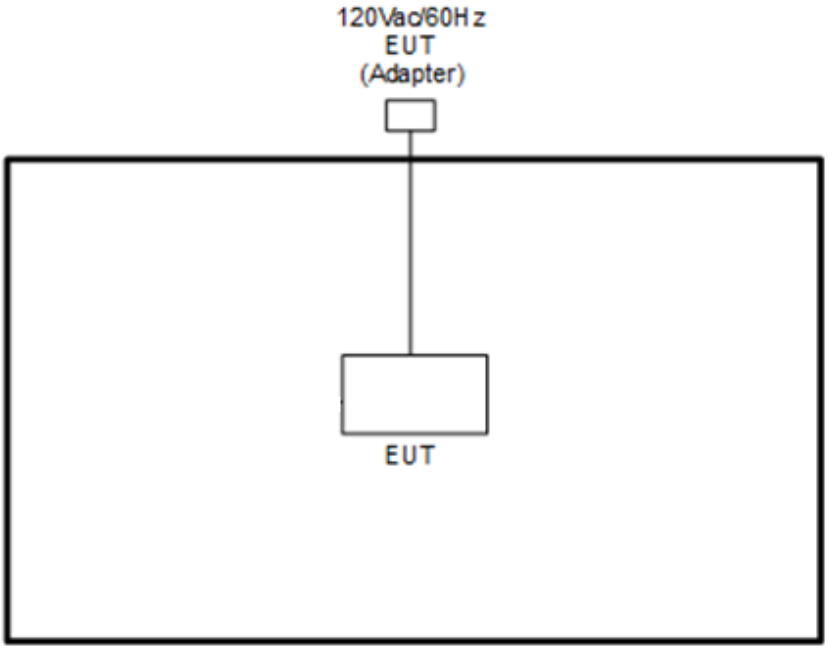

1.10 Table for Supporting Units

Support Unit	Manufacturer	Model	FCC ID
System Simulator	Anritsu	MT8820C	N/A
WLAN AP	D-Link	DIR-865L	KA2IR865LA1
Bluetooth Earphone	Sony Ericsson	MW600	PY70DA2029
Notebook	DELL	Latitude E6320	FCC DoC/ Contains FCC ID: QDS-BRCM1054
SD Card	SanDisk	MicroSD HC	FCC DoC
NFC Card	Metro Taipei	Easy Card	N/A

2. CONDUCTED EMISSION TEST

2.1 Measuring Instruments

See list of measuring instruments of this test report.

2.2 Test setup

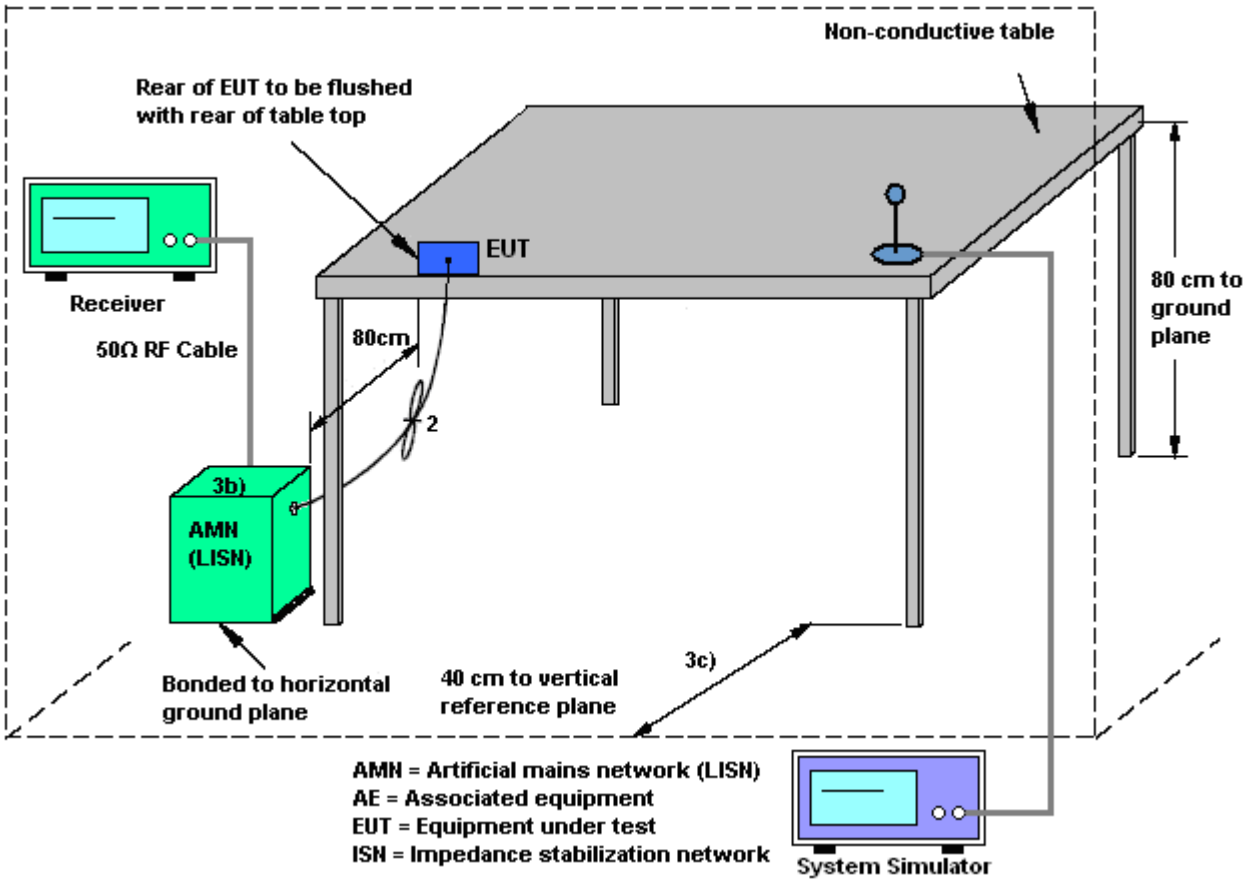

2.3 Test Result of Conducted Emission Test

Please refer to Appendix B.

2.4 AC Power Line Conducted Emissions Measurement

2.4.1 Limit

For equipment that is designed to be connected to the public utility (AC) power line, the radio frequency voltage that is conducted back onto the AC power line on any frequency or frequencies within the band 150 kHz to 30 MHz shall not exceed the limits in the following table.

Frequency of Emission (MHz)	Conducted Limit (dBμV)	
	Quasi-Peak	Average
0.15-0.5	66 to 56*	56 to 46*
0.5-5	56	46
5-30	60	50

*Decreases with the logarithm of the frequency.

2.4.2 Test Procedures

1. The EUT was placed 0.4 meter from the conducting wall of the shielding room, and it was kept at least 80 centimeters from any other grounded conducting surface.
2. Connect EUT to the power mains through a line impedance stabilization network (LISN).
3. All the support units are connecting to the other LISN.
4. The LISN provides 50 ohm coupling impedance for the measuring instrument.
5. The FCC states that a 50 ohm, 50 microhenry LISN should be used.
6. Both sides of AC line were checked for maximum conducted interference.
7. The frequency range from 150 kHz to 30 MHz was searched.
8. Set the test-receiver system to Peak Detect Function and specified bandwidth (IF Bandwidth = 9kHz) with Maximum Hold Mode. Then measurement is also conducted by Average Detector and Quasi-Peak Detector Function respectively.

3. CONDUCTED TEST ITEMS

3.1 Measuring Instruments

See list of measuring instruments of this test report.

3.2 Test Setup

3.2.1 20dB and 99% OBW Spectrum Bandwidth

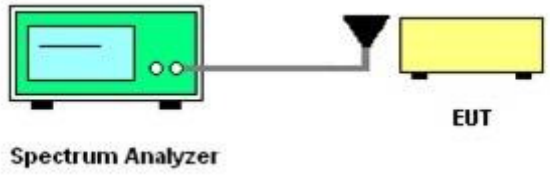

3.2.2 Frequency Stability

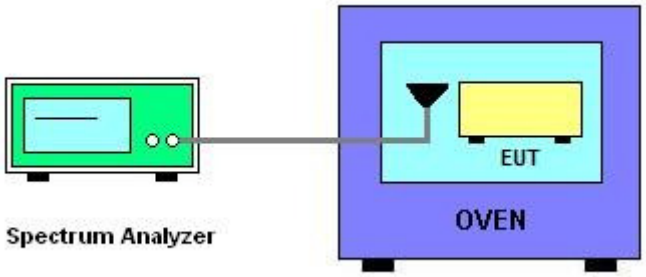

3.3 Test Result of Conducted Test Items

Please refer to Appendix C.

3.4 20dB and 99% OBW Spectrum Bandwidth Measurement

3.4.1 Limit

Intentional radiators must be designed to ensure that the 20dB and 99% emission bandwidth in the specific band 13.553~13.567MHz.

3.4.2 Test Procedures

1. The spectrum analyzer connected via a receive antenna placed near the EUT in peak Max hold mode.
2. The resolution bandwidth of 1 kHz and the video bandwidth of 3 kHz were used.
3. Measured the spectrum width with power higher than 20dB below carrier.
4. Measured the 99% OBW.

3.5 Frequency Stability Measurement

3.5.1 Limit

The frequency tolerance of the carrier signal shall be maintained within +/- 0.01% (100ppm) of the operating frequency over a temperature variation of -20 degrees to +50 degrees C at normal supply voltage, and for a variation in the primary supply voltage from 85% to 115% of the rated supply voltage at a temperature of 20 degrees C. For battery operated equipment, the equipment tests shall be performed using a new battery.

3.5.2 Test Procedures

1. The spectrum analyzer connected via a receive antenna placed near the EUT.
2. EUT have transmitted signal and fixed channelize.
3. Set the spectrum analyzer span to view the entire emissions bandwidth.
4. Set RBW = 1 kHz, VBW = 3 kHz with peak detector and maxhold settings.
5. The fc is declaring of channel frequency. Then the frequency error formula is $(fc-f)/fc \times 10^6$ ppm and the limit is less than ±100ppm.
6. Extreme temperature rule is -20°C~50°C.

4. RADIATED TEST ITEMS

4.1 Measuring Instruments

See list of measuring instruments of this test report.

4.2 Test Setup

4.2.1 For radiated emissions below 30MHz

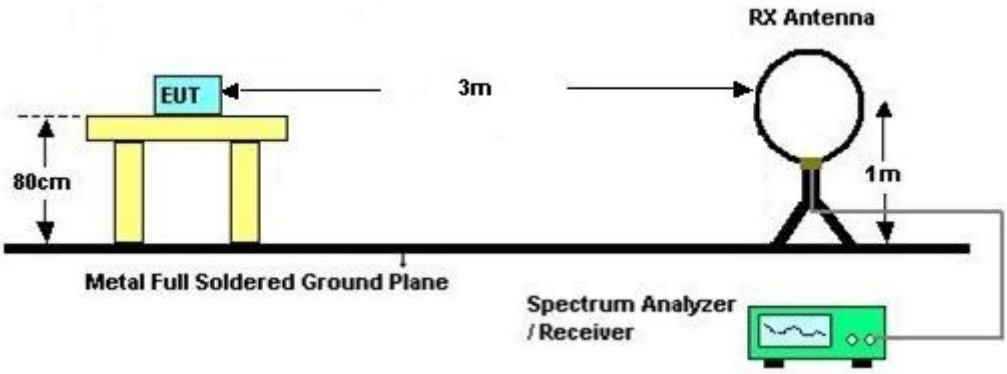

4.2.2 For radiated emissions above 30MHz

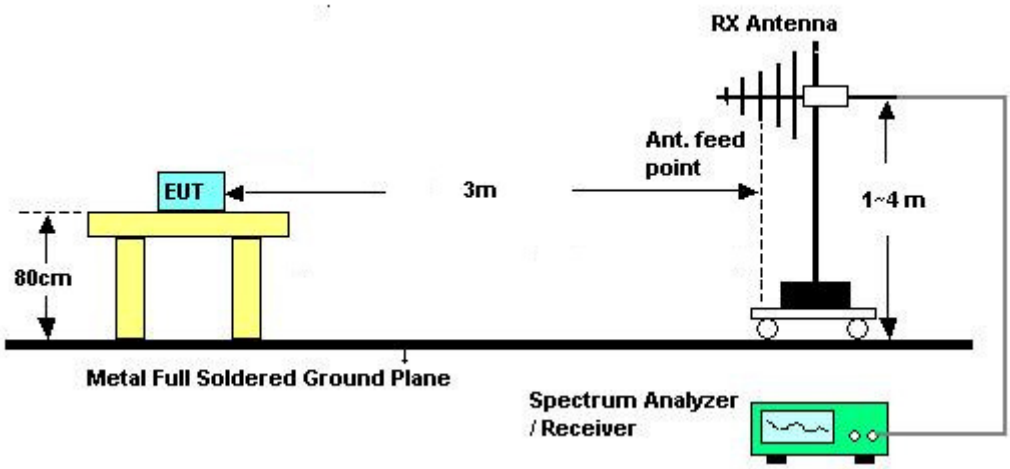

4.3 Test Result of Radiated Test Items

Please refer to Appendix D.

4.4 Field Strength of Fundamental Emissions and Mask Measurement

4.4.1 Limit

Rules and specifications	FCC CFR 47 Part 15 section 15.225 IC RSS-210 A2.6			
Description	Compliance with the spectrum mask is tested with RBW set to 9kHz.			
Freq. of Emission (MHz)	Field Strength (μV/m) at 30m	Field Strength (dBμV/m) at 30m	Field Strength (dBμV/m) at 10m	Field Strength (dBμV/m) at 3m
1.705~13.110	30	29.5	48.58	69.5
13.110~13.410	106	40.5	59.58	80.5
13.410~13.553	334	50.5	69.58	90.5
13.553~13.567	15848	84.0	103.08	124.0
13.567~13.710	334	50.5	69.58	90.5
13.710~14.010	106	40.5	59.58	80.5
14.010~30.000	30	29.5	48.58	69.5

4.4.2 Test Procedures

1. Configure the EUT according to ANSI C63.10. The EUT was placed on the top of the turntable 0.8 meter above ground. The phase center of the loop receiving antenna mounted antenna tower was placed 3 meters far away from the turntable.
2. Power on the EUT and all the supporting units. The turntable was rotated by 360 degrees to determine the position of the highest radiation.
3. The height of the receiving antenna was fixed at one meter above ground to find the maximum emissions field strength.
4. For Fundamental emissions, use the receiver to measure QP reading.
5. When the radiated emissions limits are expressed in terms of the average value of the emissions, and pulsed operation is employed, the measurement field strength shall be determined by averaging over one complete pulse train, including blanking intervals, as long as the pulse train does not exceed 0.1 seconds. As an alternative (provided the transmitter operates for longer than 0.1 seconds) or in cases where the pulse train exceeds 0.1 seconds, the measured field strength shall be determined from the average absolute voltage during a 0.1 second interval during which the field strength is at its maximum value.
6. Compliance with the spectrum mask is tested with RBW set to 9kHz.

Note: Emission level (dBμV/m) = 20 log Emission level (μV/m).

4.5 Radiated Emissions Measurement

4.5.1 Limit

The field strength of any emissions which appear outside of 13.110 ~14.010MHz band shall not exceed the general radiated emissions limits.

Frequencies (MHz)	Field Strength (μV/m)	Measurement Distance (meters)
0.009~0.490	2400/F(kHz)	300
0.490~1.705	24000/F(kHz)	30
1.705~30.0	30	30
30~88	100	3
88~216	150	3
216~960	200	3
Above 960	500	3

4.5.2 Measuring Instrument Setting

The following table is the setting of receiver.

Receiver Parameter	Setting
Attenuation	Auto
Frequency Range: 9kHz~150kHz	RBW 200Hz for QP
Frequency Range: 150kHz~30MHz	RBW 9kHz for QP
Frequency Range: 30MHz~1000MHz	RBW 120kHz for Peak

Note: The emission limits shown in the above table are based on measurements employing a CISPR quasi-peak detector except for the frequency bands 9-90 kHz, 110-490 kHz. Radiated emission limits in these two bands are based on measurements employing an average detector.

4.5.3 Test Procedures

1. Configure the EUT according to ANSI C63.10. The EUT was placed on the top of the turntable 0.8 meter above ground. The phase center of the receiving antenna mounted on the top of a height-variable antenna tower was placed 3 meters far away from the turntable.
1. Power on the EUT and all the supporting units. The turntable was rotated by 360 degrees to determine the position of the highest radiation.
2. The height of the broadband receiving antenna was varied between one meter and four meters above ground to find the maximum emissions field strength of both horizontal and vertical polarization.
3. For each suspected emissions, the antenna tower was scan (from 1 M to 4 M) and then the turntable was rotated (from 0 degree to 360 degrees) to find the maximum reading.
4. Set the test-receiver system to Peak or CISPR quasi-peak Detect Function with specified bandwidth under Maximum Hold Mode.
5. When the radiated emissions limits are expressed in terms of the average value of the emissions, and pulsed operation is employed, the measurement field strength shall be determined by averaging over one complete pulse train, including blanking intervals, as long as the pulse train does not exceed 0.1 seconds. As an alternative (provided the transmitter operates for longer than 0.1 seconds) or in cases where the pulse train exceeds 0.1 seconds, the measured field strength shall be determined from the average absolute voltage during a 0.1 second interval during which the field strength is at its maximum value.
6. In case the emission is lower than 30MHz, loop antenna has to be used for measurement and the recorded data should be QP measured by receiver. Antenna Requirements

4.5.4 Limit

Except for special regulations, the Low-power Radio-frequency Devices must not be equipped with any jacket for installing an antenna with extension cable. An intentional radiator shall be designed to ensure that no antenna other than that furnished by the responsible party shall be used with the device. The use of a permanently attached antenna or of an antenna that uses a unique coupling to the intentional radiator shall be considered sufficient to comply with the provisions of this Section. The manufacturer may design the unit so that the user can replace a broken antenna, but the use of a standard antenna jack or electrical connector is prohibited.

4.5.5 Antenna Anti-Replacement Construction

An embedded-in antenna design is used.

5. LIST OF MEASURING EQUIPMENT

Instrument	Manufacturer	Model No.	Serial No.	Characteristics	Calibration Date	Test Date	Due Date	Remark
AC Power Source	AC POWER	AFC-500W	F104070011	50Hz~60Hz	Dec. 02, 2015	May 10, 2016	Dec. 01, 2016	Conducted (TH03-HY)
Spectrum Analyzer	Rohde & Schwarz	FSP30	101329	9kHz~30GHz	Jun. 24, 2015	May 10, 2016	Jun. 23, 2016	Conducted (TH03-HY)
Temperature Chamber	ESPEC	SU-641	92013721	-30℃ ~70℃	Nov. 20, 2015	May 10, 2016	Nov. 19, 2016	Conducted (TH03-HY)
AC Power Source	ChainTek	APC-1000W	N/A	N/A	N/A	May 11, 2016	N/A	Conduction (CO05-HY)
EMI Test Receiver	Rohde & Schwarz	ESCI 7	100724	9kHz~7GHz	Aug. 26, 2015	May 11, 2016	Aug. 25, 2016	Conduction (CO05-HY)
LISN	Rohde & Schwarz	ENV216	100080	9kHz~30MHz	Dec. 02, 2015	May 11, 2016	Dec. 01, 2016	Conduction (CO05-HY)
EMI Test Receiver	Keysight	N9038A(MXE)	MY54130085	20Hz ~ 8.4GHz	Nov. 04, 2015	May 10, 2016	Nov. 03, 2016	Radiation (03CH11-HY)
Loop Antenna	Rohde & Schwarz	HFH2-Z2	100315	9 kHz~30 MHz	Sep. 02, 2015	May 10, 2016	Sep. 01, 2016	Radiation (03CH11-HY)
Amplifier	SONOMA	310N	187312	9kHz~1GHz	Nov. 20, 2015	May 10, 2016	Nov. 19, 2016	Radiation (03CH11-HY)
Bilog Antenna	TESEQ	CBL 6111D	35414	30MHz~1GHz	Nov. 17, 2015	May 10, 2016	Nov. 16, 2016	Radiation (03CH11-HY)
Spectrum Analyzer	Keysight	N9010A	MY54200486	10Hz ~ 44GHz	Sep. 24, 2015	May 10, 2016	Sep. 23, 2016	Radiation (03CH11-HY)
Antenna Mast	EMEC	AM-BS-4500-B	N/A	1~4m	N/A	May 10, 2016	N/A	Radiation (03CH11-HY)
Turn Table	EMEC	TT 2000	N/A	0~360 Degree	N/A	May 10, 2016	N/A	Radiation (03CH11-HY)

Appendix A. Test Results of Conducted Emission Test

Test Mode :	NFC Tx	Test Voltage :	120Vac / 60Hz
Function Type :	GSM850 Idle + Bluetooth Link + WLAN Link + Adapter + NFC Tx		

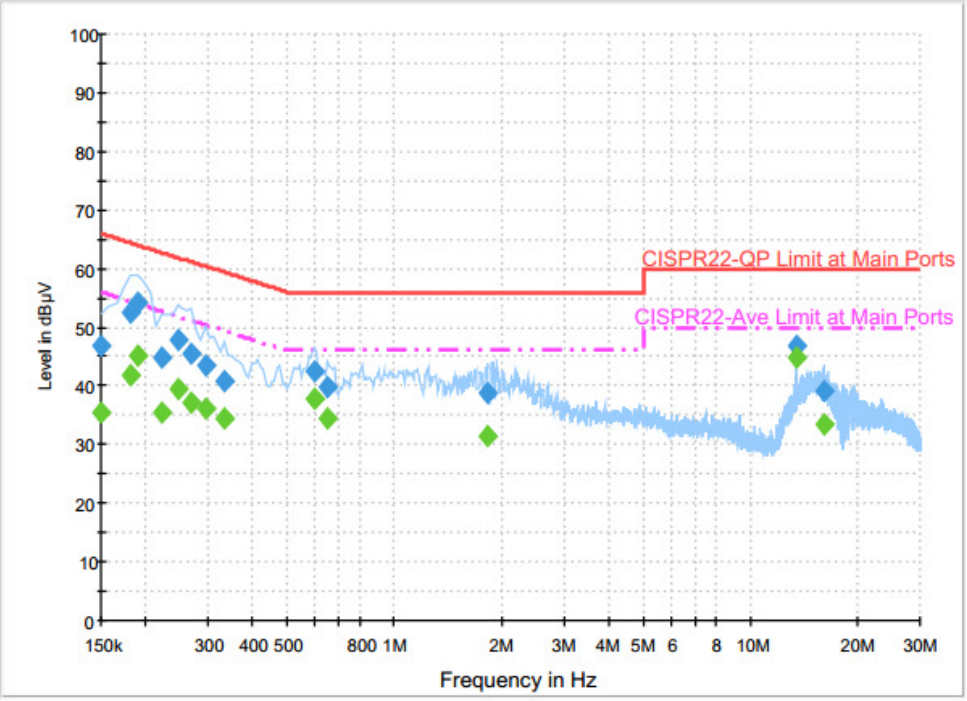

Final Result : Quasi-Peak

Frequency (MHz)	Quasi-Peak (dBµV)	Filter	Line	Corr. (dB)	Margin (dB)	Limit (dBµV)
0.150000	46.7	Off	L1	19.6	19.3	66.0
0.182000	52.6	Off	L1	19.6	11.8	64.4
0.190000	54.2	Off	L1	19.6	9.8	64.0
0.222000	44.7	Off	L1	19.6	18.0	62.7
0.246000	47.9	Off	L1	19.6	14.0	61.9
0.270000	45.5	Off	L1	19.6	15.6	61.1
0.294000	43.5	Off	L1	19.6	16.9	60.4
0.334000	40.7	Off	L1	19.6	18.7	59.4
0.598000	42.6	Off	L1	19.6	13.4	56.0
0.646000	39.7	Off	L1	19.6	16.3	56.0
1.830000	38.9	Off	L1	19.7	17.1	56.0
13.558000	46.8	Off	L1	20.3	13.2	60.0
16.230000	39.3	Off	L1	20.5	20.7	60.0

Test Mode :	NFC Tx	Test Voltage :	120Vac / 60Hz
Function Type :	GSM850 Idle + Bluetooth Link + WLAN Link + Adapter + NFC Tx		

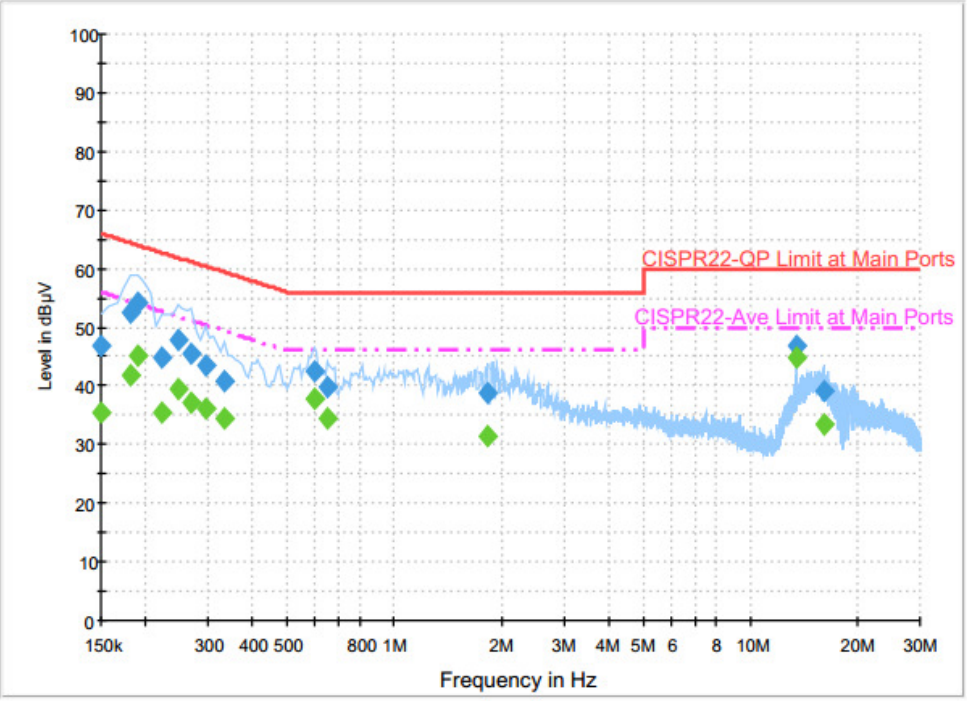

Final Result : Average

Frequency (MHz)	Average (dBµV)	Filter	Line	Corr. (dB)	Margin (dB)	Limit (dBµV)
0.150000	35.3	Off	L1	19.6	20.7	56.0
0.182000	42.0	Off	L1	19.6	12.4	54.4
0.190000	45.2	Off	L1	19.6	8.8	54.0
0.222000	35.4	Off	L1	19.6	17.3	52.7
0.246000	39.5	Off	L1	19.6	12.4	51.9
0.270000	37.3	Off	L1	19.6	13.8	51.1
0.294000	36.2	Off	L1	19.6	14.2	50.4
0.334000	34.3	Off	L1	19.6	15.1	49.4
0.598000	37.8	Off	L1	19.6	8.2	46.0
0.646000	34.4	Off	L1	19.6	11.6	46.0
1.830000	31.5	Off	L1	19.7	14.5	46.0
13.558000	44.7	Off	L1	20.3	5.3	50.0
16.230000	33.4	Off	L1	20.5	16.6	50.0

Test Mode :	NFC Tx	Test Voltage :	120Vac / 60Hz
Function Type :	GSM850 Idle + Bluetooth Link + WLAN Link + Adapter + NFC Tx		

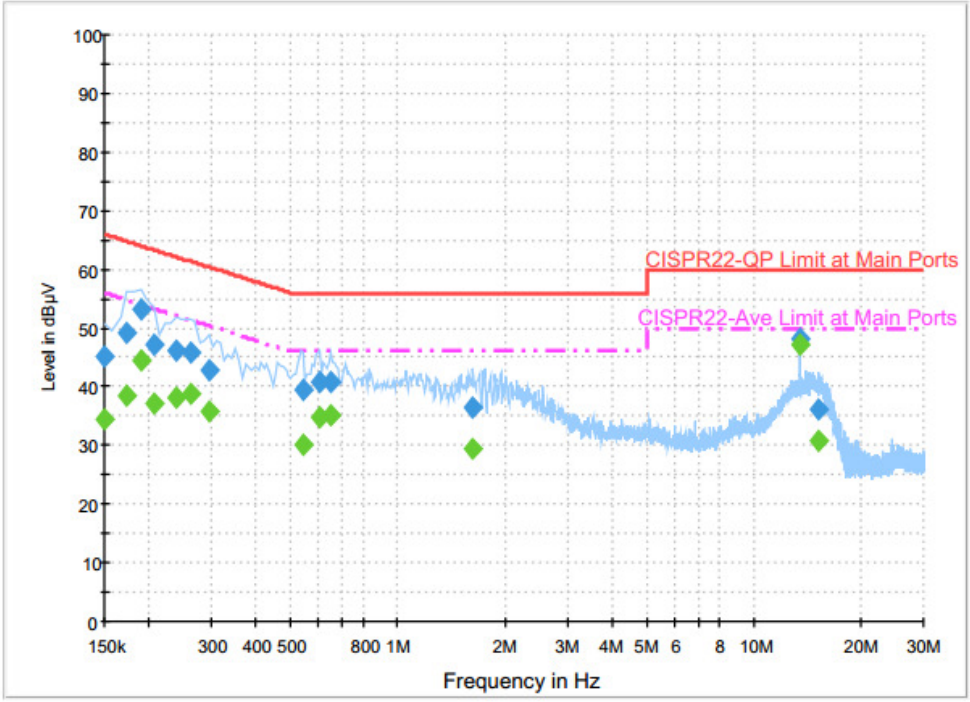

Final Result : Quasi-Peak

Frequency (MHz)	Quasi-Peak (dBµV)	Filter	Line	Corr. (dB)	Margin (dB)	Limit (dBµV)
0.150000	45.1	Off	N	19.6	20.9	66.0
0.174000	49.1	Off	N	19.6	15.7	64.8
0.190000	53.2	Off	N	19.6	10.8	64.0
0.206000	47.1	Off	N	19.6	16.3	63.4
0.238000	46.0	Off	N	19.6	16.2	62.2
0.262000	45.9	Off	N	19.6	15.5	61.4
0.294000	42.9	Off	N	19.6	17.5	60.4
0.542000	39.4	Off	N	19.6	16.6	56.0
0.606000	40.8	Off	N	19.6	15.2	56.0
0.646000	40.8	Off	N	19.6	15.2	56.0
1.630000	36.5	Off	N	19.7	19.5	56.0
13.558000	48.3	Off	N	20.3	11.7	60.0
15.230000	36.1	Off	N	20.5	23.9	60.0

Test Mode :	NFC Tx	Test Voltage :	120Vac / 60Hz
Function Type :	GSM850 Idle + Bluetooth Link + WLAN Link + Adapter + NFC Tx		

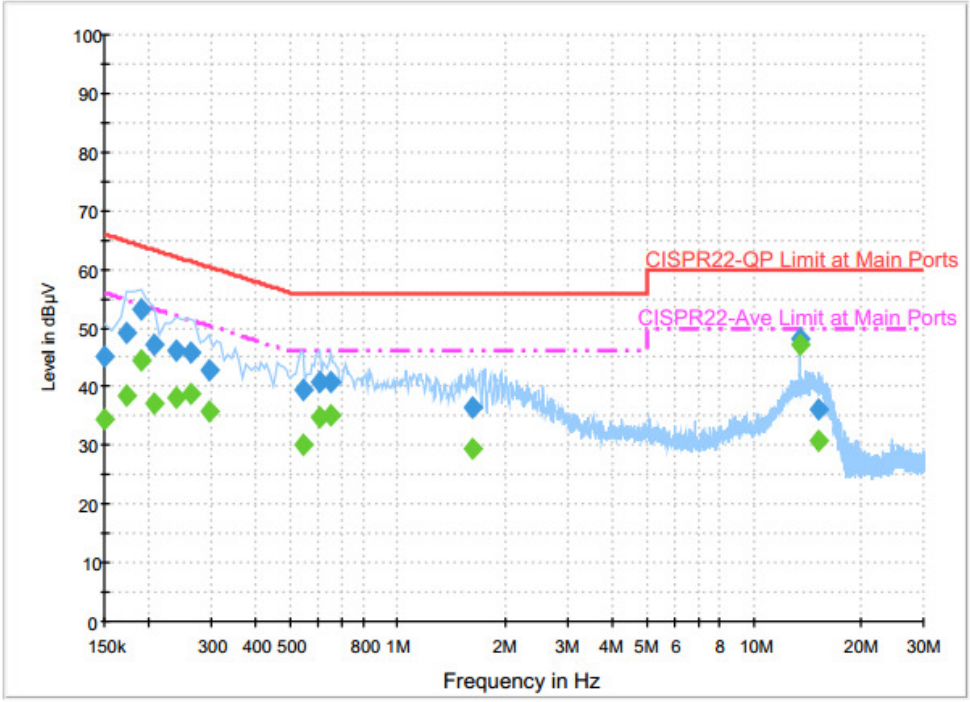

Final Result : Average

Frequency (MHz)	Average (dBµV)	Filter	Line	Corr. (dB)	Margin (dB)	Limit (dBµV)
0.150000	34.5	Off	N	19.6	21.5	56.0
0.174000	38.5	Off	N	19.6	16.3	54.8
0.190000	44.6	Off	N	19.6	9.4	54.0
0.206000	37.1	Off	N	19.6	16.3	53.4
0.238000	38.0	Off	N	19.6	14.2	52.2
0.262000	38.8	Off	N	19.6	12.6	51.4
0.294000	35.7	Off	N	19.6	14.7	50.4
0.542000	30.0	Off	N	19.6	16.0	46.0
0.606000	34.9	Off	N	19.6	11.1	46.0
0.646000	35.1	Off	N	19.6	10.9	46.0
1.630000	29.5	Off	N	19.7	16.5	46.0
13.558000	47.0	Off	N	20.3	3.0	50.0
15.230000	30.8	Off	N	20.5	19.2	50.0

(1) with antenna

Remark: 13.558MHz is the NFC RF fundamental signal.

(2) with dummy load

Remark: Only the fundamental NFC signal needs to be retested per C63.4.

Appendix B. Test Results of Conducted Test Items

B.1 Test Result of 20dB Spectrum Bandwidth

Test mode	NFC Tx	Test Frequency (MHz)	13.56
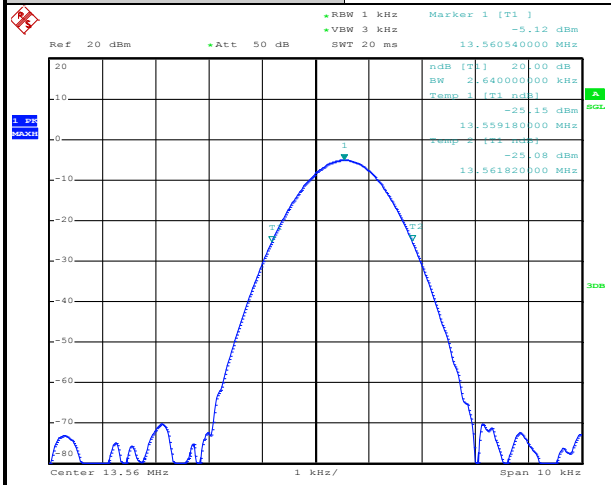		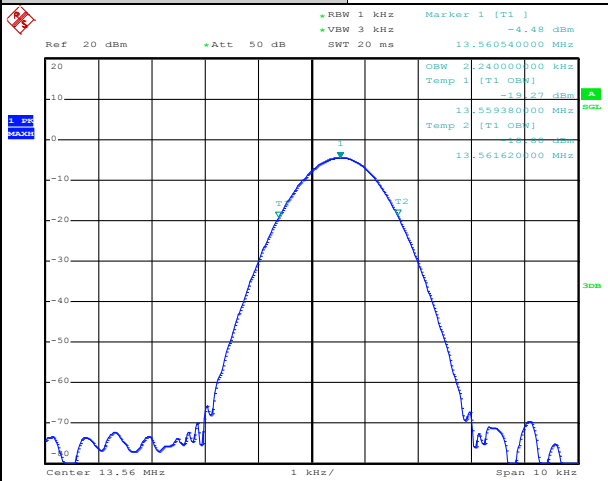	
20dB Bandwidth (kHz)	2.64	**99% OccupiedBW(kHz)**	2.24
Frequency range (MHz)	**f_L > 13.553**	13.55918	**Test Result**
	f_H < 13.567	13.56182	**Complies**

B.2 Test Result of Frequency Stability

Voltage vs. Frequency Stability		Temperature vs. Frequency Stability		
Voltage (Vac)	Measurement Frequency (MHz)	Temperature (℃)	Time	Measurement Frequency (MHz)
120	13.560500	**-20**	**0**	13.560560
102	13.560500		**2**	13.560560
138	13.560500		**5**	13.560550
			10	13.560540
		-10	**0**	13.560540
			2	13.560520
			5	13.560510
			10	13.560500
		0	**0**	13.560540
			2	13.560540
			5	13.560520
			10	13.560530
		10	**0**	13.560540
			2	13.560530
			5	13.560520
			10	13.560520
		20	**0**	13.560520
			2	13.560520
			5	13.560520
			10	13.560500
		30	**0**	13.560500
			2	13.560500
			5	13.560500
			10	13.560500
		40	**0**	13.560480
			2	13.560490
			5	13.560500
			10	13.560490

Voltage vs. Frequency Stability		Temperature vs. Frequency Stability		
Voltage (Vac)	Measurement Frequency (MHz)	Temperature (℃)	Time	Measurement Frequency (MHz)
		50	0	13.560480
			2	13.560480
			5	13.560480
			10	13.560480
Max.Deviation (MHz)	0.000500	Max.Deviation (MHz)		0.000560
Max.Deviation (ppm)	36.8732	Max.Deviation (ppm)		41.2979
Limit	FS < ±100 ppm	Limit		FS < ±100 ppm
Test Result	PASS	Test Result		PASS

Appendix C. Test Results of Radiated Test Items

C.1 Test Result of Field Strength of Fundamental Emissions

Test Mode :	NFC Tx	Test Frequency (MHz)	13.56

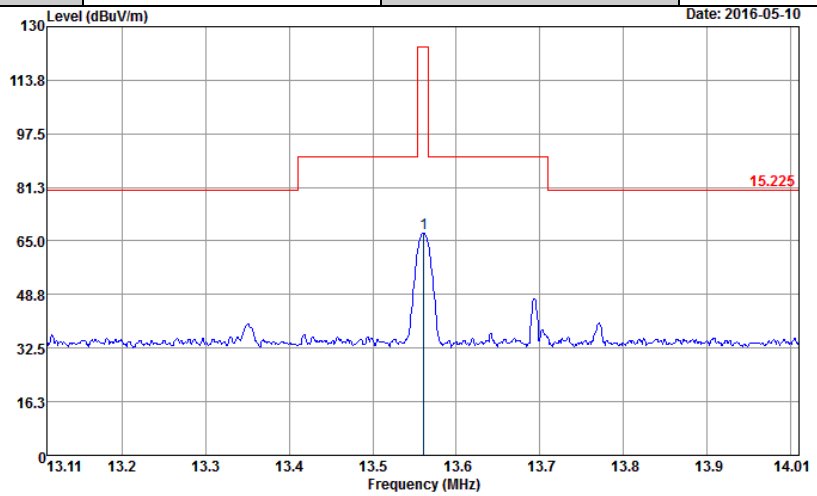

Site : 03CH11-HY
Condition : 15.225 3m LOOP_ANT(H) HORIZONTAL
Project : 640145
Mode : 1

	Freq	Level	Over Limit	Limit Line	Read Level	Antenna Factor	Cable Loss	A/Pos	T/Pos	Remark
	MHz	dBuV/m	dB	dBuV/m	dBuV	dB/m	dB	cm	deg	
1	13.56	67.45	-56.55	124.00	46.72	20.05	0.68	100	178	QP

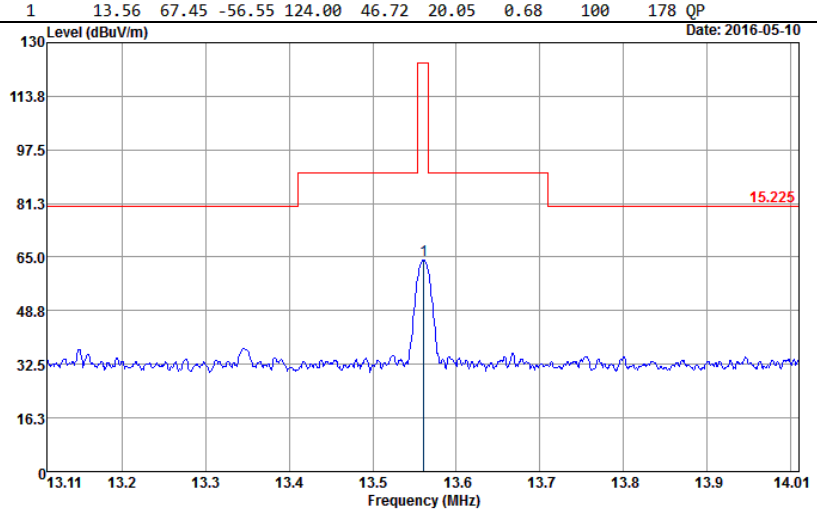

Site : 03CH11-HY
Condition : 15.225 3m LOOP_ANT(V) VERTICAL
Project : 640145
Mode : 1

	Freq	Level	Over Limit	Limit Line	Read Level	Antenna Factor	Cable Loss	A/Pos	T/Pos	Remark
	MHz	dBuV/m	dB	dBuV/m	dBuV	dB/m	dB	cm	deg	
1	13.56	64.09	-59.91	124.00	43.36	20.05	0.68	100	271	QP

Note: All NFC's spurious emissions are below 20dB of limits.

C.2 Results of Radiated Emissions (9 kHz~30MHz)

Test Mode :	NFC Tx	Polarization :	Horizontal

Frequency (MHz)	Level (dBμV/m)	Over Limit (dB)	Limit Line (dBμV/m)	Read Level (dBμV)	Antenna Factor (dB)	Cable Loss (dB)	Ant Pos (cm)	Table Pos (deg)	Remark
0.02104	46.3	-74.85	121.15	25.37	20.25	0.68	-	-	Average
0.07227	47.17	-63.26	110.43	26.45	20.04	0.68	100	274	Average
0.10244	37.44	-69.95	107.39	16.77	19.99	0.68	-	-	QP
0.12204	44.21	-61.66	105.87	23.56	19.97	0.68	-	-	Average
0.34006	46.81	-50.16	96.97	26.22	19.91	0.68	-	-	Average
0.8655	41.05	-27.81	68.86	20.46	19.91	0.68	-	-	QP
10.36	36.88	-32.62	69.5	16.17	20.03	0.68	-	-	QP
13.56	67.06	-2.44	69.5	46.33	20.05	0.68	-	-	QP
17.557	37.27	-32.23	69.5	16.42	20.17	0.68	-	-	QP
29.37	37.38	-32.12	69.5	15.89	20.42	1.07	-	-	QP

Test Mode :	NFC Tx	Polarization :	Vertical

Frequency (MHz)	Level (dBμV/m)	Over Limit (dB)	Limit Line (dBμV/m)	Read Level (dBμV)	Antenna Factor (dB)	Cable Loss (dB)	Ant Pos (cm)	Table Pos (deg)	Remark
0.02282	46.21	-74.23	120.44	25.28	20.25	0.68	100	148	Average
0.07815	41.01	-68.74	109.75	20.29	20.04	0.68	-	-	Average
0.10104	34.33	-73.18	107.51	13.66	19.99	0.68	-	-	QP
0.11984	39.33	-66.7	106.03	18.68	19.97	0.68	-	-	Average
0.32816	43.24	-54.04	97.28	22.65	19.91	0.68	-	-	Average
0.55008	39.24	-33.56	72.8	18.66	19.9	0.68	-	-	QP
12.52	37.61	-31.89	69.5	16.87	20.06	0.68	-	-	QP
13.56	64.03	-5.47	69.5	43.3	20.05	0.68	-	-	QP
18.925	37.57	-31.93	69.5	16.58	20.31	0.68	-	-	QP
27.88	37.4	-32.1	69.5	15.72	20.61	1.07	-	-	QP

Note:

1. 13.56 MHz is fundamental signal which can be ignored.
2. The amplitude of spurious emissions which are attenuated by more than 20dB below the permissible value has no need to be reported.
3. Distance extrapolation factor = 40 log (specific distance / test distance) (dB);
4. Limit line = specific limits (dBμV) + distance extrapolation factor.

C.3 Results of Radiated Emissions (30MHz~1GHz)

Test Mode :	NFC Tx	Polarization :	Horizontal

Frequency (MHz)	Level (dBμV/m)	Over Limit (dB)	Limit Line (dBμV/m)	Read Level (dBμV)	Antenna Factor (dB)	Cable Loss (dB)	Preamp Factor (dB)	Ant Pos (cm)	Table Pos (deg)	Remark
85.62	24.44	-15.56	40	40.76	14.3	1.17	31.79	-	-	Peak
142.32	27.65	-15.85	43.5	39.99	17.76	1.68	31.78	-	-	Peak
237.9	23.99	-22.01	46	36.24	17.54	1.98	31.77	-	-	Peak
325.9	23.81	-22.19	46	32.92	20.43	2.23	31.77	-	-	Peak
594.7	25.99	-20.01	46	29.26	25.6	3.16	32.03	-	-	Peak
909	31.91	-14.09	46	29.96	29.45	3.86	31.36	100	25	Peak

Test Mode :	NFC Tx	Polarization :	Vertical

Frequency (MHz)	Level (dBμV/m)	Over Limit (dB)	Limit Line (dBμV/m)	Read Level (dBμV)	Antenna Factor (dB)	Cable Loss (dB)	Preamp Factor (dB)	Ant Pos (cm)	Table Pos (deg)	Remark
79.95	28.6	-11.4	40	45.64	13.58	1.17	31.79	125	34	Peak
142.59	28.91	-14.59	43.5	41.25	17.76	1.68	31.78	-	-	Peak
238.98	20.75	-25.25	46	32.92	17.62	1.98	31.77	-	-	Peak
428.1	25.02	-20.98	46	30.27	22.9	3.68	31.83	-	-	Peak
677.3	27.93	-18.07	46	30.05	26.47	3.45	32.04	-	-	Peak
945.4	33.05	-12.95	46	29.74	30.49	3.89	31.07	-	-	Peak

Note:

1. The amplitude of spurious emissions which are attenuated by more than 20dB below the permissible value has no need to be reported.
2. Emission level (dBμV/m) = 20 log Emission level (μV/m).
3. Corrected Reading: Antenna Factor + Cable Loss + Read Level - Preamp Factor= Level.