Test Laboratory: Sporton International Inc. SAR/HAC Testing Lab Date: 2016/5/4

System Check_Head_750MHz

DUT: D750V3-1012

Communication System: CW; Frequency: 750 MHz;Duty Cycle: 1:1
Medium: HSL_750_160504 Medium parameters used: f = 750 MHz; σ = 0.901 mho/m; ε_r = 42.7; ρ = 1000 kg/m^3
Ambient Temperature：23.5 ℃； Liquid Temperature：22.5 ℃

DASY4 Configuration:
- Probe: ES3DV3 - SN3270; ConvF(6.5, 6.5, 6.5); Calibrated: 2015/9/28
- Sensor-Surface: 3mm (Mechanical Surface Detection)
- Electronics: DAE3 Sn360; Calibrated: 2015/10/15
- Phantom: SAM_Right; Type: SAM_Right; Serial: TP-1303
- ;Postprocessing SW: SEMCAD, V1.8 Build 159

Pin=250mW/Area Scan (61x61x1): Measurement grid: dx=15mm, dy=15mm
Maximum value of SAR (interpolated) = 2.29 mW/g

Pin=250mW/Zoom Scan (5x5x7)/Cube 0: Measurement grid: dx=8mm, dy=8mm, dz=5mm
Reference Value = 51.8 V/m; Power Drift = 0.033 dB
Peak SAR (extrapolated) = 3.35 W/kg
SAR(1 g) = 2.08 mW/g; SAR(10 g) = 1.37 mW/g
Maximum value of SAR (measured) = 2.68 mW/g

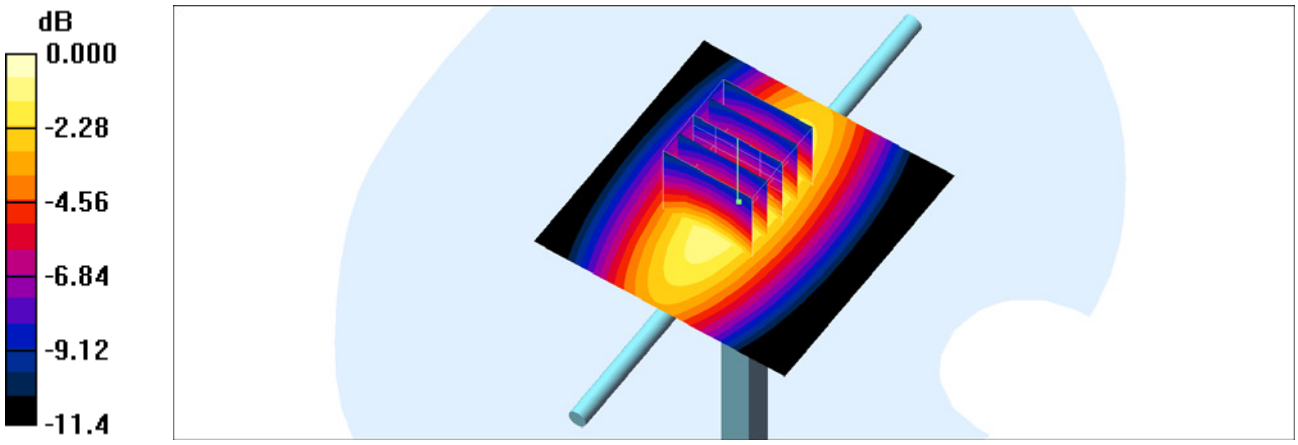

0 dB = 2.68mW/g

System Check_Body_750MHz

DUT: D750V3-1012

Communication System: CW ; Frequency: 750 MHz;Duty Cycle: 1:1
Medium: MSL_750_160513 Medium parameters used: f = 750 MHz; σ = 0.962 S/m; ε_r = 56.676; ρ = 1000 kg/m^3
Ambient Temperature：23.3 ℃; Liquid Temperature：22.3 ℃

DASY5 Configuration
- Probe: EX3DV4 - SN3955; ConvF(10.36, 10.36, 10.36); Calibrated: 2015/11/24;
- Sensor-Surface: 1.4mm (Mechanical Surface Detection)
- Electronics: DAE4 Sn1399; Calibrated: 2015/11/23
- Phantom: SAM_Right; Type: QD000P40CD; Serial: S/N:1801
- Measurement SW: DASY52, Version 52.8 (8); SEMCAD X Version 14.6.10 (7331)

Configuration/Pin=250mW/Area Scan (61x61x1): Interpolated grid: dx=1.500 mm, dy=1.500 mm
Maximum value of SAR (interpolated) = 2.93 W/kg

Configuration/Pin=250mW/Zoom Scan (5x5x7)/Cube 0: Measurement grid: dx=8mm, dy=8mm, dz=5mm
Reference Value = 57.69 V/m; Power Drift = -0.03 dB
Peak SAR (extrapolated) = 3.33 W/kg
SAR(1 g) = 2.21 W/kg; SAR(10 g) = 1.47 W/kg
Maximum value of SAR (measured) = 2.94 W/kg

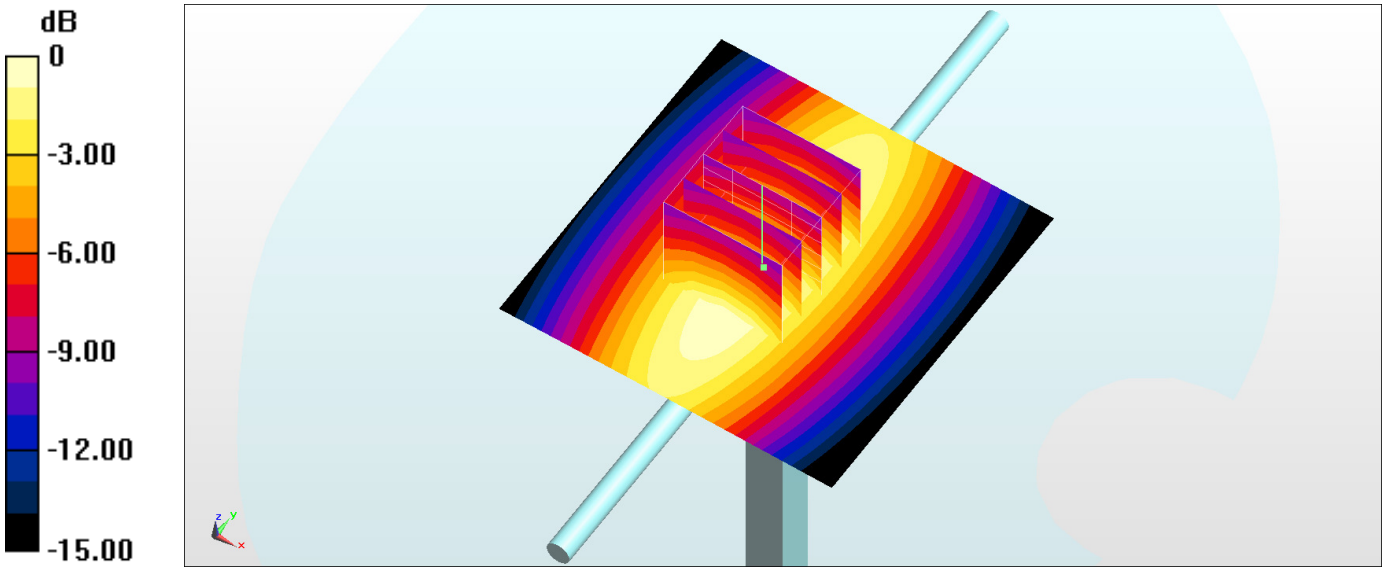

0 dB = 2.94 W/kg = 4.68 dBW/kg

System Check_Head_1750MHz_160515

DUT: D1750V2-1068

Communication System: CW; Frequency: 1750 MHz;Duty Cycle: 1:1
Medium: HSL_1750_160515 Medium parameters used: f = 1750 MHz; σ = 1.376 S/m; ε_r = 40.527; ρ = 1000 kg/m^3
Ambient Temperature：23.6 ℃; Liquid Temperature：22.6 ℃

DASY5 Configuration
- Probe: ES3DV3 - SN3270; ConvF(5.32, 5.32, 5.32); Calibrated: 2015/9/28;
- Sensor-Surface: 3mm (Mechanical Surface Detection)
- Electronics: DAE3 Sn360; Calibrated: 2015/10/15
- Phantom: SAM_Left; Type: QD 000 P40 C; Serial: TP-1150
- Measurement SW: DASY52, Version 52.8 (8); SEMCAD X Version 14.6.10 (7331)

Configuration/Pin=250mW/Area Scan (61x61x1): Interpolated grid: dx=1.500 mm, dy=1.500 mm
Maximum value of SAR (interpolated) = 12.5 W/kg

Configuration/Pin=250mW/Zoom Scan (5x5x7)/Cube 0: Measurement grid: dx=8mm, dy=8mm, dz=5mm
Reference Value = 95.09 V/m; Power Drift = 0.08 dB
Peak SAR (extrapolated) = 16.6 W/kg
SAR(1 g) = 9.49 W/kg; SAR(10 g) = 5.11 W/kg
Maximum value of SAR (measured) = 11.7 W/kg

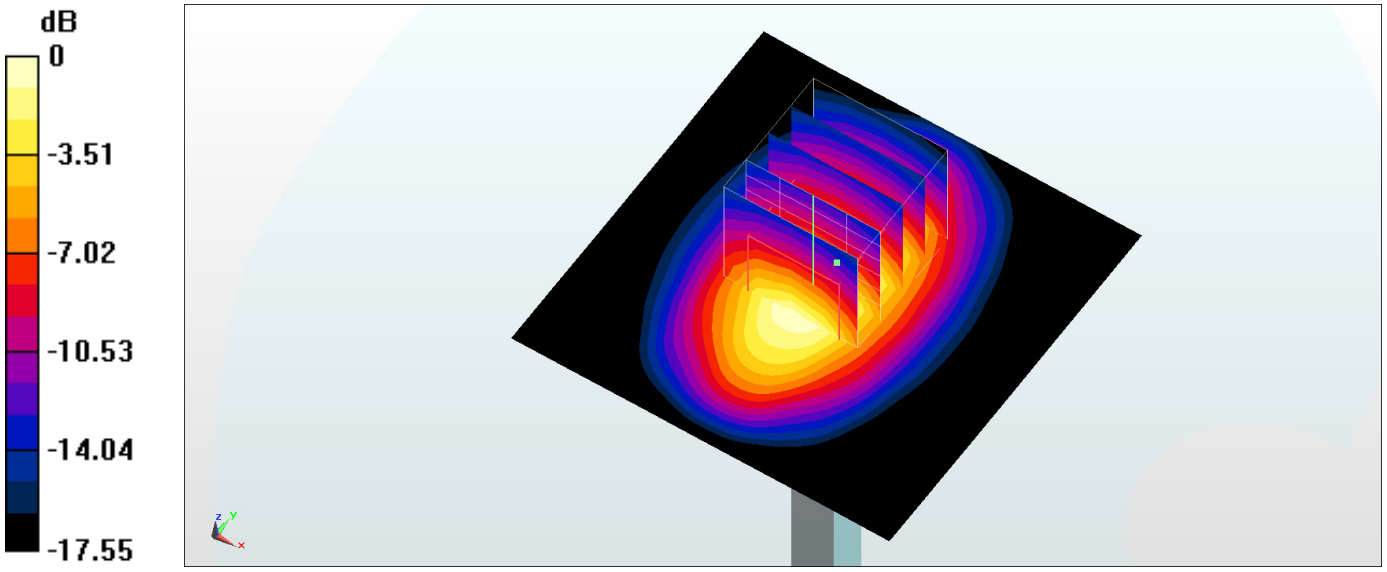

0 dB = 11.7 W/kg = 10.68 dBW/kg

System Check_Body_1750MHz

DUT: D1750V2-1068

Communication System: CW; Frequency: 1750 MHz;Duty Cycle: 1:1
Medium: MSL_1750_160513 Medium parameters used: f = 1750 MHz; σ = 1.451 S/m; ε_r = 52.644; ρ = 1000 kg/m^3
Ambient Temperature：23.6 ℃; Liquid Temperature：22.6 ℃

DASY5 Configuration
- Probe: EX3DV4 - SN3955; ConvF(8.25, 8.25, 8.25); Calibrated: 2015/11/24;
- Sensor-Surface: 1.4mm (Mechanical Surface Detection)
- Electronics: DAE4 Sn1399; Calibrated: 2015/11/23
- Phantom: SAM_Left; Type: QD000P40CD; Serial: S/N:1796
- Measurement SW: DASY52, Version 52.8 (8); SEMCAD X Version 14.6.10 (7331)

Configuration/Pin=250mW/Area Scan (61x61x1): Interpolated grid: dx=1.500 mm, dy=1.500 mm
Maximum value of SAR (interpolated) = 13.2 W/kg

Configuration/Pin=250mW/Zoom Scan (5x5x7)/Cube 0: Measurement grid: dx=8mm, dy=8mm, dz=5mm
Reference Value = 97.46 V/m; Power Drift = 0.11 dB
Peak SAR (extrapolated) = 15.4 W/kg
SAR(1 g) = 8.8 W/kg; SAR(10 g) = 4.73 W/kg
Maximum value of SAR (measured) = 13.3 W/kg

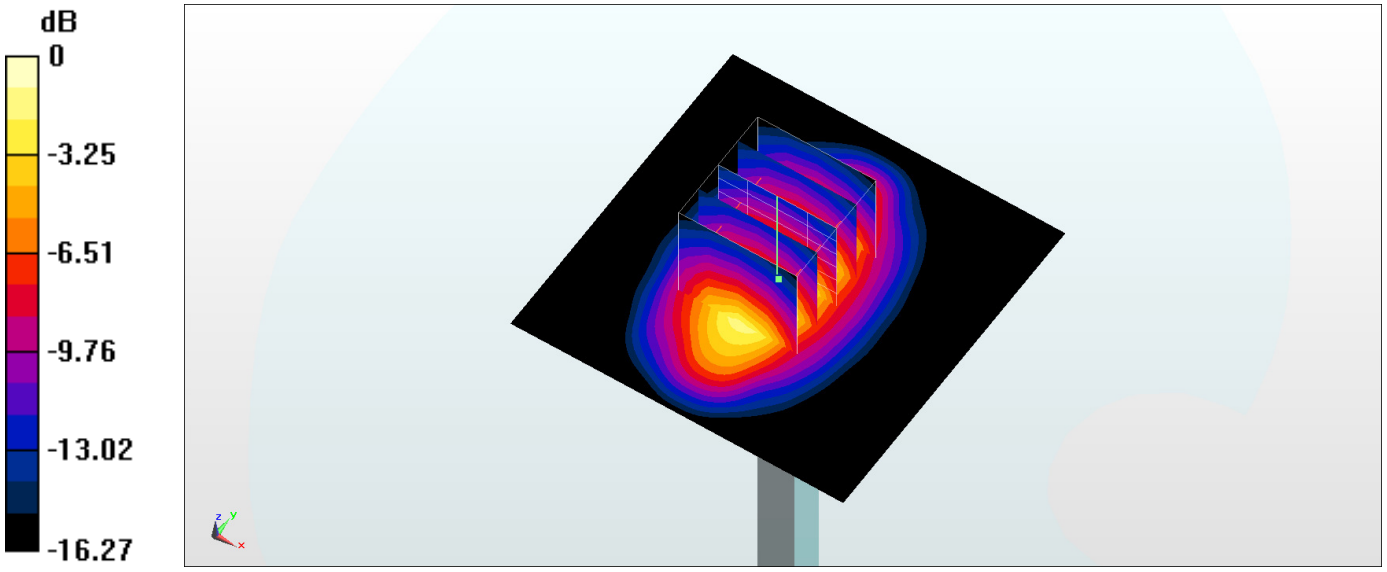

0 dB = 13.3 W/kg = 11.24 dBW/kg

Test Laboratory: Sporton International Inc. SAR/HAC Testing Lab Date: 2016/5/5

System Check_Head_1900MHz

DUT: D1900V2-5d041

Communication System: CW; Frequency: 1900 MHz;Duty Cycle: 1:1
Medium: HSL_1900_160505 Medium parameters used: f = 1900 MHz; σ = 1.46 mho/m; ε_r = 38.3; ρ = 1000 kg/m^3
Ambient Temperature：23.5 ℃; Liquid Temperature：22.5 ℃

DASY4 Configuration:
- Probe: ES3DV3 - SN3270; ConvF(5.12, 5.12, 5.12); Calibrated: 2015/9/28
- Sensor-Surface: 3mm (Mechanical Surface Detection)
- Electronics: DAE3 Sn360; Calibrated: 2015/10/15
- Phantom: SAM_Left; Type: QD 000 P40 C; Serial: TP-1150
- ;Postprocessing SW: SEMCAD, V1.8 Build 159

Pin=250mW/Area Scan (61x61x1): Measurement grid: dx=15mm, dy=15mm
Maximum value of SAR (interpolated) = 13.6 mW/g

Pin=250mW/Zoom Scan (5x5x7)/Cube 0: Measurement grid: dx=8mm, dy=8mm, dz=5mm
Reference Value = 97.8 V/m; Power Drift = -0.005 dB
Peak SAR (extrapolated) = 18.7 W/kg
SAR(1 g) = 10.3 mW/g; SAR(10 g) = 5.34 mW/g
Maximum value of SAR (measured) = 13.0 mW/g

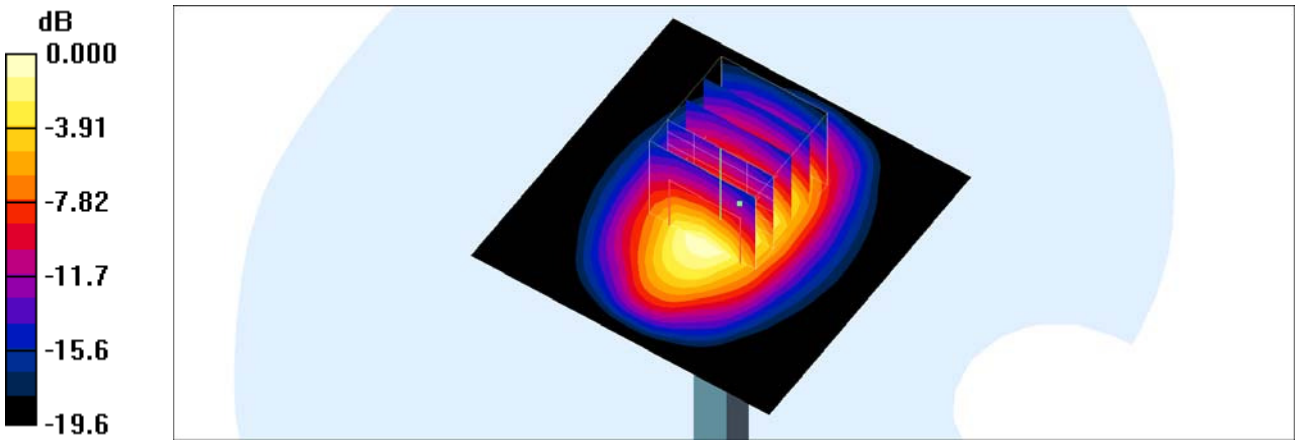

0 dB = 13.0mW/g

Test Laboratory: Sporton International Inc. SAR/HAC Testing Lab Date: 2016/5/4

System Check_Body_1900MHz

DUT: D1900V2-5d041

Communication System: CW; Frequency: 1900 MHz;Duty Cycle: 1:1
Medium: MSL_1900_160504 Medium parameters used: f = 1900 MHz; σ = 1.54 mho/m; ε_r = 54; ρ = 1000 kg/m^3
Ambient Temperature：23.6 ℃; Liquid Temperature：22.6 ℃

DASY4 Configuration:
- Probe: ES3DV3 - SN3270; ConvF(4.78, 4.78, 4.78); Calibrated: 2015/9/28
- Sensor-Surface: 3mm (Mechanical Surface Detection)
- Electronics: DAE3 Sn360; Calibrated: 2015/10/15
- Phantom: SAM_Right; Type: SAM_Right; Serial: TP-1303
- ;Postprocessing SW: SEMCAD, V1.8 Build 159

Pin=250mW/Area Scan (61x61x1): Measurement grid: dx=15mm, dy=15mm
Maximum value of SAR (interpolated) = 14.1 mW/g

Pin=250mW/Zoom Scan (5x5x7)/Cube 0: Measurement grid: dx=8mm, dy=8mm, dz=5mm
Reference Value = 94.6 V/m; Power Drift = -0.011 dB
Peak SAR (extrapolated) = 18.0 W/kg
SAR(1 g) = 10.21 mW/g; SAR(10 g) = 5.38 mW/g
Maximum value of SAR (measured) = 12.5 mW/g

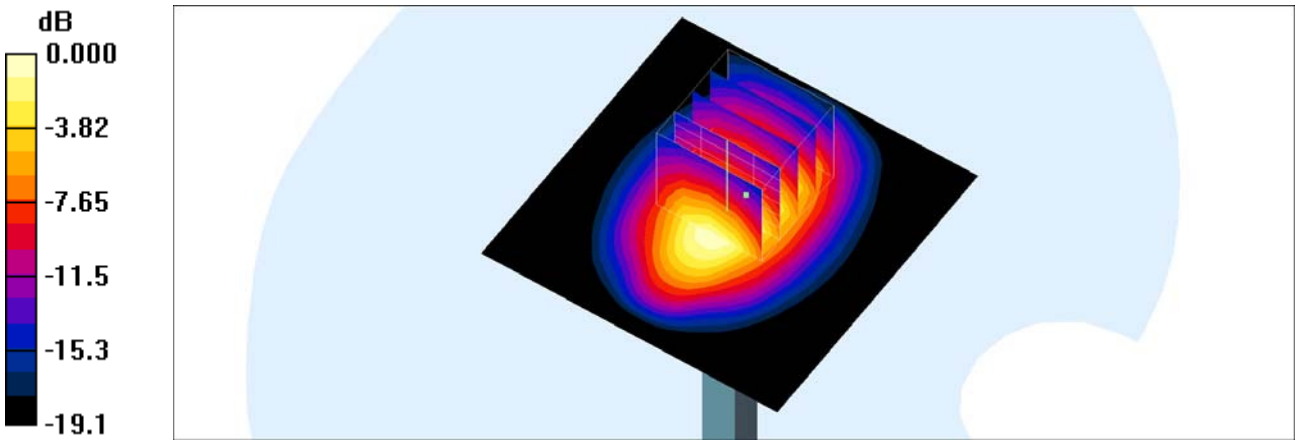

0 dB = 12.5mW/g

System Check_Head_2600MHz

DUT: D2600V2-1008

Communication System: CW; Frequency: 2600 MHz;Duty Cycle: 1:1
Medium: HSL_2600_160514 Medium parameters used: f = 2600 MHz; σ = 1.994 S/m; ε_r = 39.149; ρ = 1000 kg/m^3
Ambient Temperature：23.6 ℃; Liquid Temperature：22.6 ℃

DASY5 Configuration
- Probe: EX3DV4 - SN3955; ConvF(7.2, 7.2, 7.2); Calibrated: 2015/11/24;
- Sensor-Surface: 1.4mm (Mechanical Surface Detection)
- Electronics: DAE4 Sn1399; Calibrated: 2015/11/23
- Phantom: SAM_Right; Type: QD000P40CD; Serial: S/N:1801
- Measurement SW: DASY52, Version 52.8 (8); SEMCAD X Version 14.6.10 (7331)

Configuration/Pin=250mW/Area Scan (61x61x1): Interpolated grid: dx=1.200 mm, dy=1.200 mm
Maximum value of SAR (interpolated) = 25.2 W/kg

Configuration/Pin=250mW/Zoom Scan (7x7x7)/Cube 0: Measurement grid: dx=5mm, dy=5mm, dz=5mm
Reference Value = 116.1 V/m; Power Drift = -0.02 dB
Peak SAR (extrapolated) = 32.0 W/kg
SAR(1 g) = 14.2 W/kg; SAR(10 g) = 6.22 W/kg
Maximum value of SAR (measured) = 24.9 W/kg

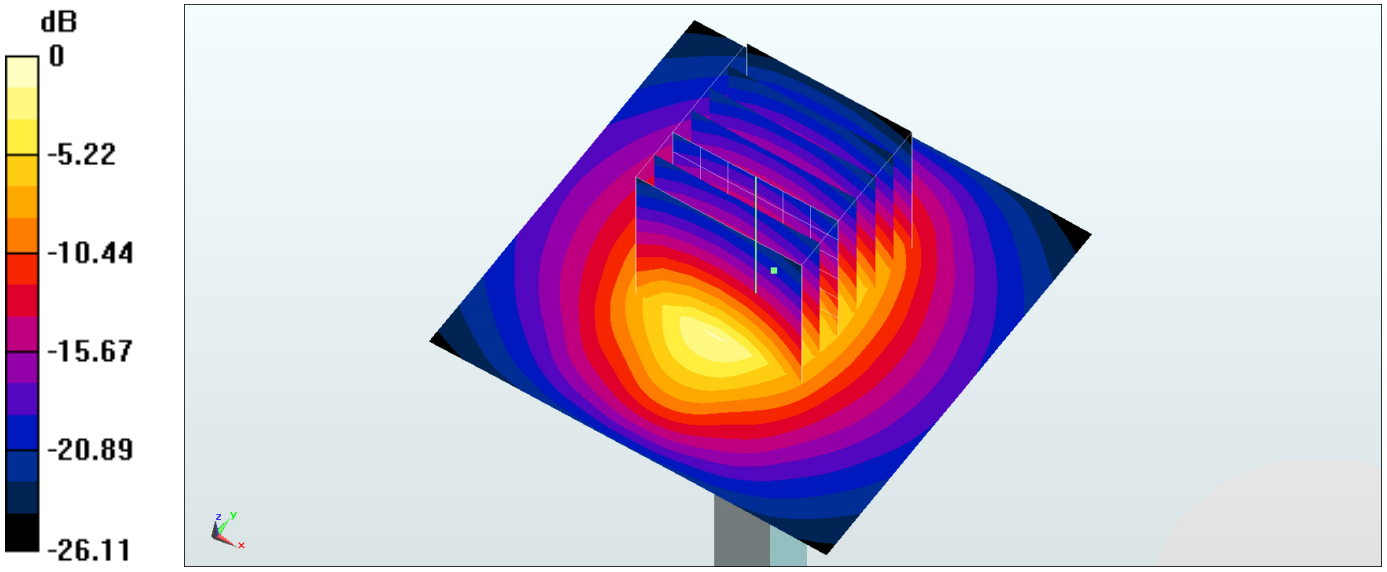

0 dB = 24.9 W/kg = 13.96 dBW/kg

System Check_Body_2600MHz

DUT: D2600V2-1008

Communication System: CW; Frequency: 2600 MHz;Duty Cycle: 1:1
Medium: MSL_2600_160513 Medium parameters used: f = 2600 MHz; σ = 2.129 S/m; ε_r = 52.287; ρ = 1000 kg/m^3
Ambient Temperature：23.6 ℃; Liquid Temperature：22.6 ℃

DASY5 Configuration
- Probe: EX3DV4 - SN3955; ConvF(7.23, 7.23, 7.23); Calibrated: 2015/11/24;
- Sensor-Surface: 1.4mm (Mechanical Surface Detection)
- Electronics: DAE4 Sn1399; Calibrated: 2015/11/23
- Phantom: SAM_Left; Type: QD000P40CD; Serial: S/N:1796
- Measurement SW: DASY52, Version 52.8 (8); SEMCAD X Version 14.6.10 (7331)

Configuration/Pin=250mW/Area Scan (71x71x1): Interpolated grid: dx=1.200 mm, dy=1.200 mm
Maximum value of SAR (interpolated) = 23.0 W/kg

Configuration/Pin=250mW/Zoom Scan (7x7x7)/Cube 0: Measurement grid: dx=5mm, dy=5mm, dz=5mm
Reference Value = 106.7 V/m; Power Drift = 0.02 dB
Peak SAR (extrapolated) = 29.0 W/kg
SAR(1 g) = 13.2 W/kg; SAR(10 g) = 5.82 W/kg
Maximum value of SAR (measured) = 22.8 W/kg

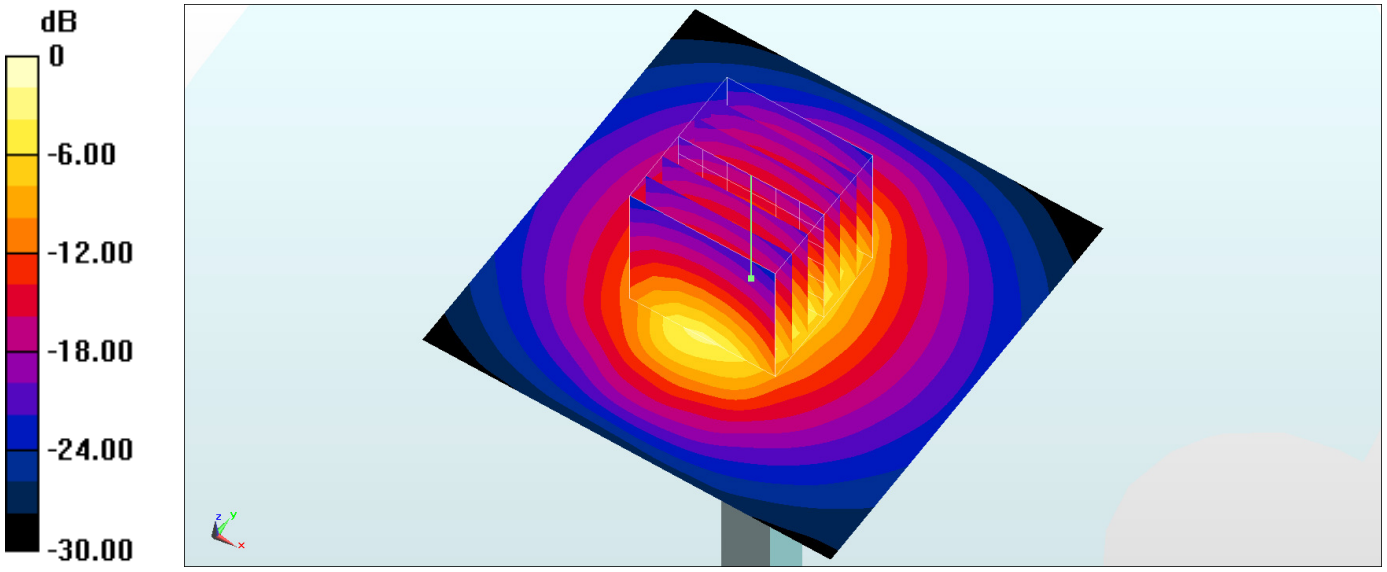

0 dB = 22.8 W/kg = 13.58 dBW/kg