Test Laboratory: Sporton International Inc. SAR/HAC Testing Lab Date: 2016/7/30

System Check_Head_750MHz

DUT: D750V3-1012

Communication System: CW; Frequency: 750 MHz;Duty Cycle: 1:1
Medium: HSL_750_160730 Medium parameters used: f = 750 MHz; σ = 0.887 mho/m; ε_r = 43.4; ρ = 1000 kg/m^3
Ambient Temperature：23.1 ℃； Liquid Temperature：22.1 ℃

DASY4 Configuration:
- Probe: ES3DV3 - SN3270; ConvF(6.5, 6.5, 6.5); Calibrated: 2015/9/28
- Sensor-Surface: 3mm (Mechanical Surface Detection)
- Electronics: DAE4 Sn1399; Calibrated: 2015/11/23
- Phantom: SAM_Right; Type: SAM_Right; Serial: TP-1303
- ;Postprocessing SW: SEMCAD, V1.8 Build 159

Pin=250mW/Area Scan (61x61x1): Measurement grid: dx=15mm, dy=15mm
Maximum value of SAR (interpolated) = 2.61 mW/g

Pin=250mW/Zoom Scan (5x5x7)/Cube 0: Measurement grid: dx=8mm, dy=8mm, dz=5mm
Reference Value = 55.6 V/m; Power Drift = -0.061 dB
Peak SAR (extrapolated) = 3.06 W/kg
SAR(1 g) = 2.15 mW/g; SAR(10 g) = 1.45 mW/g
Maximum value of SAR (measured) = 2.47 mW/g

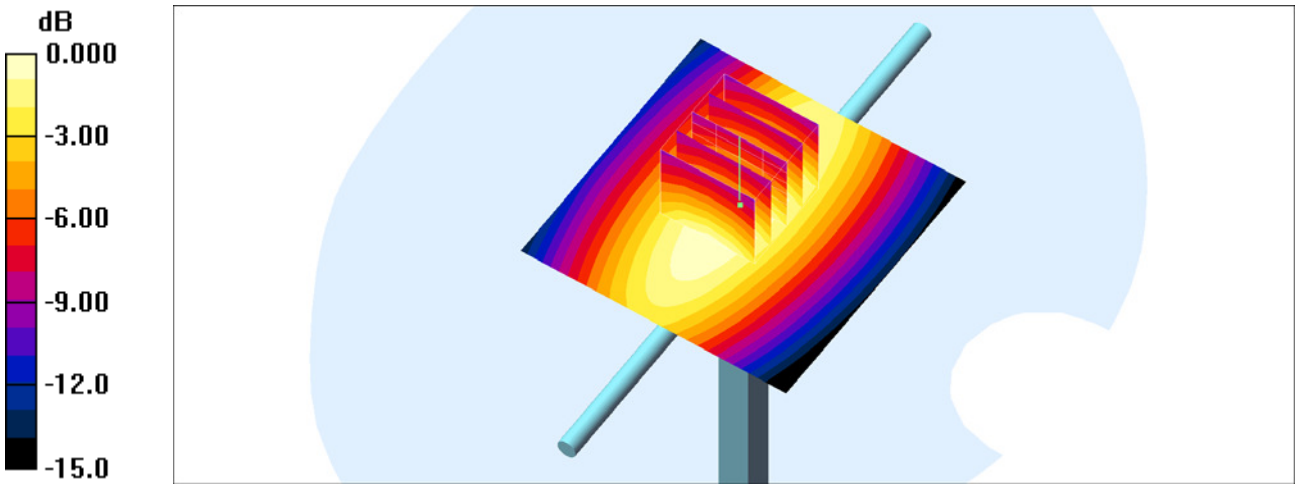

0 dB = 2.47mW/g

Test Laboratory: Sporton International Inc. SAR/HAC Testing Lab Date: 2016/7/30

System Check_Body_750MHz

DUT: D1750V2-1068

Communication System: CW; Frequency: 750 MHz;Duty Cycle: 1:1
Medium: MSL_750_160730 Medium parameters used: f = 750 MHz; σ = 0.961 mho/m; ε_r = 54.8; ρ = 1000 kg/m^3
Ambient Temperature：23.3 ℃； Liquid Temperature：22.3 ℃

DASY4 Configuration:
- Probe: ES3DV3 - SN3270; ConvF(6.3, 6.3, 6.3); Calibrated: 2015/9/28
- Sensor-Surface: 3mm (Mechanical Surface Detection)
- Electronics: DAE4 Sn1399; Calibrated: 2015/11/23
- Phantom: SAM_Right; Type: SAM_Right; Serial: TP-1303
- ;Postprocessing SW: SEMCAD, V1.8 Build 159

Pin=250mW/Area Scan (61x61x1): Measurement grid: dx=15mm, dy=15mm
Maximum value of SAR (interpolated) = 2.72 mW/g

Pin=250mW/Zoom Scan (5x5x7)/Cube 0: Measurement grid: dx=8mm, dy=8mm, dz=5mm
Reference Value = 55.0 V/m; Power Drift = -0.088 dB
Peak SAR (extrapolated) = 3.32 W/kg
SAR(1 g) = 2.34 mW/g; SAR(10 g) = 1.59 mW/g
Maximum value of SAR (measured) = 2.68 mW/g

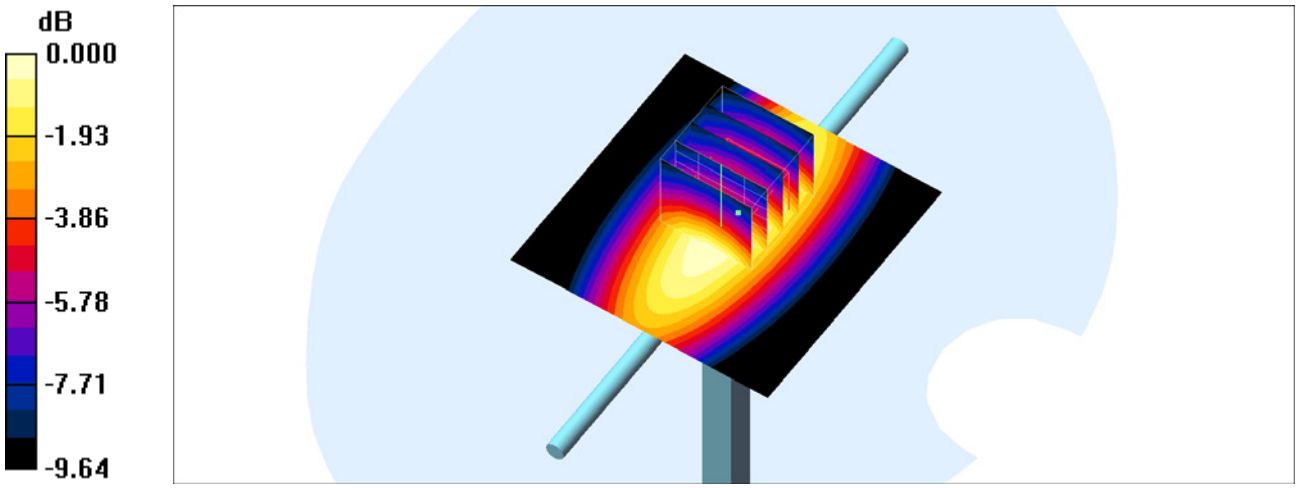

0 dB = 2.68mW/g

Test Laboratory: Sporton International Inc. SAR/HAC Testing Lab Date: 2016/7/30

System Check_Head_1750MHz

DUT: D1750V2-1068

Communication System: CW; Frequency: 1750 MHz;Duty Cycle: 1:1
Medium: HSL_1750_160730 Medium parameters used: f = 1750 MHz; σ = 1.35 mho/m; ε_r = 38.6; ρ = 1000 kg/m^3
Ambient Temperature：23.5 ℃; Liquid Temperature：22.5 ℃

DASY4 Configuration:
- Probe: ES3DV3 - SN3270; ConvF(5.32, 5.32, 5.32); Calibrated: 2015/9/28
- Sensor-Surface: 3mm (Mechanical Surface Detection)
- Electronics: DAE4 Sn1399; Calibrated: 2015/11/23
- Phantom: SAM_Right; Type: SAM_Right; Serial: TP-1303
- ;Postprocessing SW: SEMCAD, V1.8 Build 159

Pin=250mW/Area Scan (61x61x1): Measurement grid: dx=15mm, dy=15mm
Maximum value of SAR (interpolated) = 12.3 mW/g

Pin=250mW/Zoom Scan (5x5x7)/Cube 0: Measurement grid: dx=8mm, dy=8mm, dz=5mm
Reference Value = 96.2 V/m; Power Drift = -0.002 dB
Peak SAR (extrapolated) = 15.9 W/kg
SAR(1 g) = 9.18 mW/g; SAR(10 g) = 4.99 mW/g
Maximum value of SAR (measured) = 11.2 mW/g

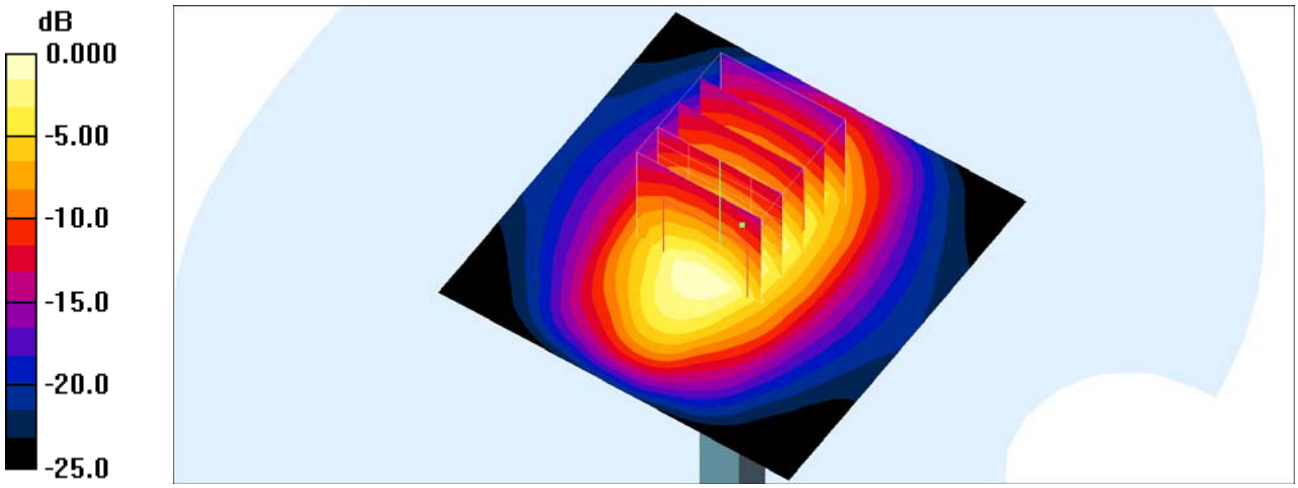

0 dB = 11.2mW/g

System Check_Body_1750MHz

DUT: D1750V2-1068

Communication System: CW; Frequency: 1750 MHz;Duty Cycle: 1:1
Medium: MSL_1750_160730 Medium parameters used: f = 1750 MHz; σ = 1.451 S/m; ε_r = 54.284; ρ = 1000 kg/m^3
Ambient Temperature：23.3 ℃; Liquid Temperature：22.3 ℃

DASY5 Configuration
- Probe: EX3DV4 - SN3955; ConvF(8.25, 8.25, 8.25); Calibrated: 2015/11/24;
- Sensor-Surface: 1.4mm (Mechanical Surface Detection)
- Electronics: DAE4 Sn778; Calibrated: 2016/5/12
- Phantom: SAM_Right; Type: QD000P40CD; Serial: S/N:1801
- Measurement SW: DASY52, Version 52.8 (8); SEMCAD X Version 14.6.10 (7331)

Pin=250mW/Area Scan (61x61x1): Interpolated grid: dx=1.500 mm, dy=1.500 mm
Maximum value of SAR (interpolated) = 13.9 W/kg

Pin=250mW/Zoom Scan (5x5x7)/Cube 0: Measurement grid: dx=8mm, dy=8mm, dz=5mm
Reference Value = 98.95 V/m; Power Drift = -0.01 dB
Peak SAR (extrapolated) = 16.2 W/kg
SAR(1 g) = 9.43 W/kg; SAR(10 g) = 5.16 W/kg
Maximum value of SAR (measured) = 13.7 W/kg

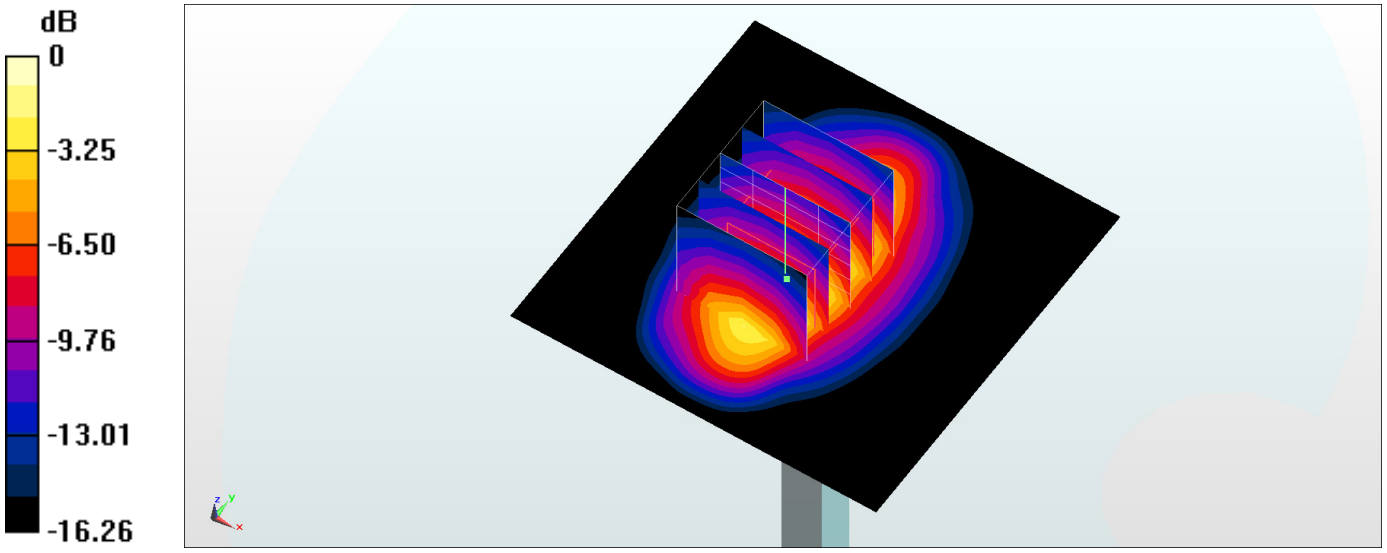

0 dB = 13.7 W/kg = 11.37 dBW/kg

System Check_Body_1750MHz

DUT: D1750V2-1068

Communication System: CW; Frequency: 1750 MHz;Duty Cycle: 1:1
Medium: MSL_1750_160730 Medium parameters used: f = 1750 MHz; σ = 1.45 mho/m; ε_r = 54.3; ρ = 1000 kg/m^3
Ambient Temperature：23.3 ℃; Liquid Temperature：22.3 ℃

DASY4 Configuration:
- Probe: ES3DV3 - SN3270; ConvF(4.95, 4.95, 4.95); Calibrated: 2015/9/28
- Sensor-Surface: 3mm (Mechanical Surface Detection)
- Electronics: DAE4 Sn1399; Calibrated: 2015/11/23
- Phantom: SAM_Right; Type: SAM_Right; Serial: TP-1303
- ;Postprocessing SW: SEMCAD, V1.8 Build 159

Pin=250mW/Area Scan (61x61x1): Measurement grid: dx=15mm, dy=15mm
Maximum value of SAR (interpolated) = 11.5 mW/g

Pin=250mW/Zoom Scan (5x5x7)/Cube 0: Measurement grid: dx=8mm, dy=8mm, dz=5mm
Reference Value = 85.6 V/m; Power Drift = 0.039 dB
Peak SAR (extrapolated) = 14.5 W/kg
SAR(1 g) = 8.33 mW/g; SAR(10 g) = 4.45 mW/g
Maximum value of SAR (measured) = 10.3 mW/g

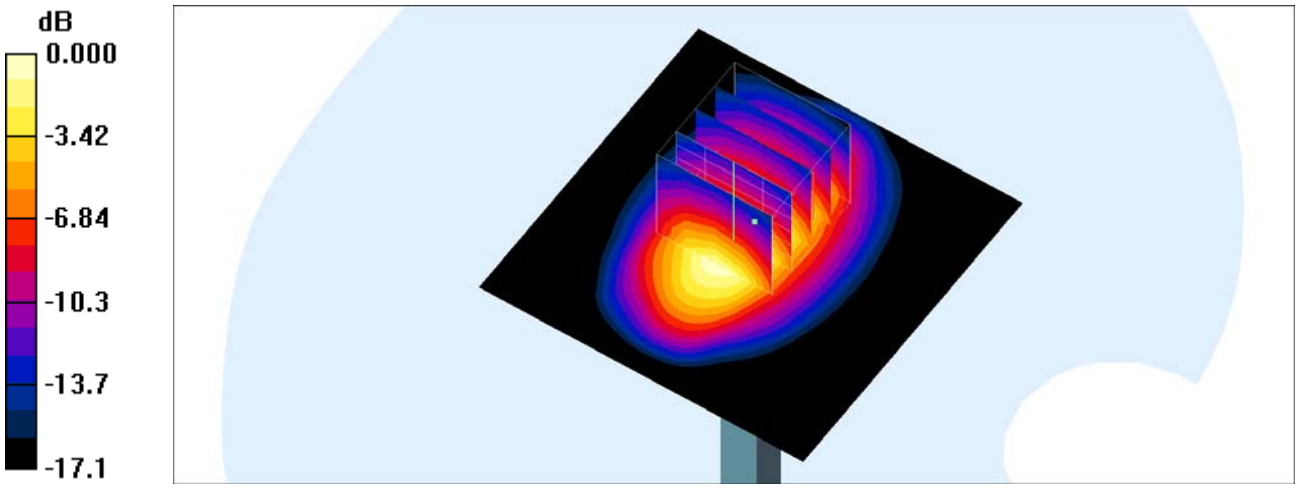

0 dB = 10.3mW/g

System Check_Head_1900MHz

DUT: D1900V2-5d041

Communication System: CW; Frequency: 1900 MHz;Duty Cycle: 1:1
Medium: HSL_1900_160730 Medium parameters used: f = 1900 MHz; σ = 1.4 mho/m; ε_r = 39.4; ρ = 1000 kg/m^3
Ambient Temperature：23.5 ℃； Liquid Temperature：22.5 ℃

DASY4 Configuration:
- Probe: ES3DV3 - SN3270; ConvF(5.12, 5.12, 5.12); Calibrated: 2015/9/28
- Sensor-Surface: 3mm (Mechanical Surface Detection)
- Electronics: DAE4 Sn1399; Calibrated: 2015/11/23
- Phantom: SAM_Right; Type: SAM_Right; Serial: TP-1303
- ;Postprocessing SW: SEMCAD, V1.8 Build 159

Pin=250mW/Area Scan (61x61x1): Measurement grid: dx=15mm, dy=15mm
Maximum value of SAR (interpolated) = 13.1 mW/g

Pin=250mW/Zoom Scan (5x5x7)/Cube 0: Measurement grid: dx=8mm, dy=8mm, dz=5mm
Reference Value = 97.7 V/m; Power Drift = -0.005 dB
Peak SAR (extrapolated) = 18.0 W/kg
SAR(1 g) = 9.9 mW/g; SAR(10 g) = 5.15 mW/g
Maximum value of SAR (measured) = 12.5 mW/g

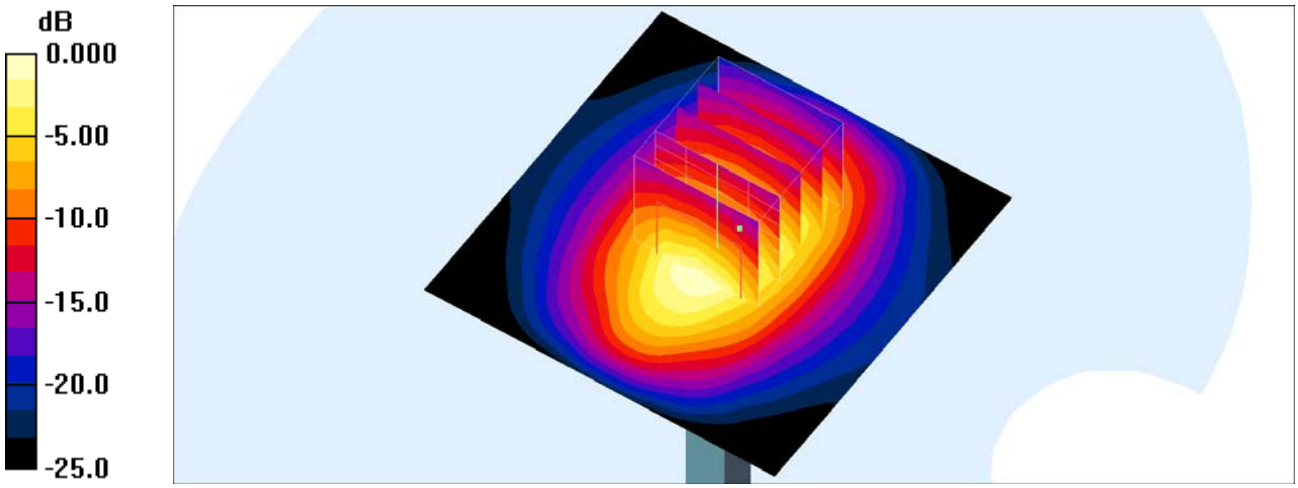

0 dB = 12.5mW/g

System Check_Body_1900MHz

DUT: D1900V2-5d041

Communication System: CW; Frequency: 1900 MHz;Duty Cycle: 1:1
Medium: MSL_1900_160730 Medium parameters used: f = 1900 MHz; σ = 1.527 S/m; ε_r = 52.818; ρ = 1000 kg/m^3
Ambient Temperature：23.3 ℃; Liquid Temperature：22.3 ℃

DASY5 Configuration
- Probe: EX3DV4 - SN3955; ConvF(7.89, 7.89, 7.89); Calibrated: 2015/11/24;
- Sensor-Surface: 1.4mm (Mechanical Surface Detection)
- Electronics: DAE4 Sn778; Calibrated: 2016/5/12
- Phantom: SAM_Right; Type: QD000P40CD; Serial: S/N:1801
- Measurement SW: DASY52, Version 52.8 (8); SEMCAD X Version 14.6.10 (7331)

Pin=250mW/Area Scan (61x61x1): Interpolated grid: dx=1.500 mm, dy=1.500 mm
Maximum value of SAR (interpolated) = 15.5 W/kg

Pin=250mW/Zoom Scan (5x5x7)/Cube 0: Measurement grid: dx=8mm, dy=8mm, dz=5mm
Reference Value = 103.0 V/m; Power Drift = -0.03 dB
Peak SAR (extrapolated) = 18.1 W/kg
SAR(1 g) = 10.3 W/kg; SAR(10 g) = 5.47 W/kg
Maximum value of SAR (measured) = 15.6 W/kg

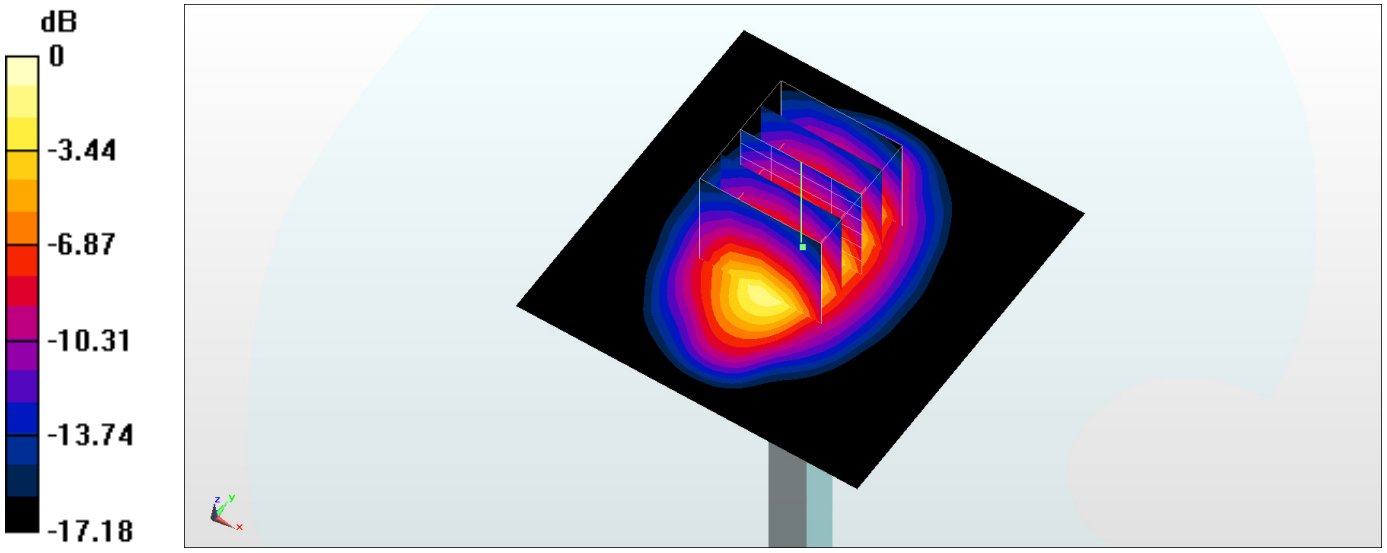

0 dB = 15.6 W/kg = 11.93 dBW/kg

Test Laboratory: Sporton International Inc. SAR/HAC Testing Lab Date: 2016/7/30

System Check_Body_1900MHz

DUT: D1900V2-5d041

Communication System: CW; Frequency: 1900 MHz;Duty Cycle: 1:1
Medium: MSL_1900_160730 Medium parameters used: f = 1900 MHz; σ = 1.53 mho/m; ε_r = 52.8; ρ = 1000 kg/m^3
Ambient Temperature：23.3 ℃; Liquid Temperature：22.3 ℃

DASY4 Configuration:
- Probe: ES3DV3 - SN3270; ConvF(4.78, 4.78, 4.78); Calibrated: 2015/9/28
- Sensor-Surface: 3mm (Mechanical Surface Detection)
- Electronics: DAE4 Sn1399; Calibrated: 2015/11/23
- Phantom: SAM_Right; Type: SAM_Right; Serial: TP-1303
- ;Postprocessing SW: SEMCAD, V1.8 Build 159

Pin=250mW/Area Scan (61x61x1): Measurement grid: dx=15mm, dy=15mm
Maximum value of SAR (interpolated) = 14.4 mW/g

Pin=250mW/Zoom Scan (5x5x7)/Cube 0: Measurement grid: dx=8mm, dy=8mm, dz=5mm
Reference Value = 88.8 V/m; Power Drift = 0.008 dB
Peak SAR (extrapolated) = 18.2 W/kg
SAR(1 g) = 10.2 mW/g; SAR(10 g) = 5.41 mW/g
Maximum value of SAR (measured) = 12.6 mW/g

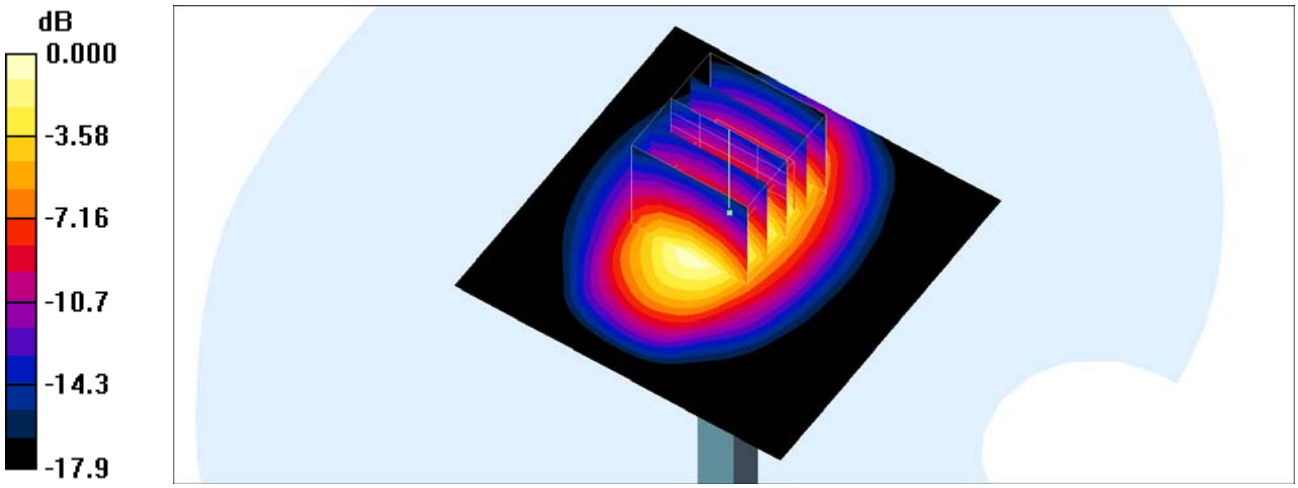

0 dB = 12.6mW/g

System Check_Head_2600MHz

DUT: D2600V2-1008

Communication System: CW; Frequency: 2600 MHz;Duty Cycle: 1:1
Medium: HSL_2600_160730 Medium parameters used: f = 2600 MHz; σ = 2.012 S/m; ε_r = 39.239; ρ = 1000 kg/m^3
Ambient Temperature：23.3 ℃; Liquid Temperature：22.3 ℃

DASY5 Configuration
- Probe: EX3DV4 - SN3955; ConvF(7.2, 7.2, 7.2); Calibrated: 2015/11/24;
- Sensor-Surface: 1.4mm (Mechanical Surface Detection)
- Electronics: DAE4 Sn778; Calibrated: 2016/5/12
- Phantom: SAM_Left; Type: QD000P40CD; Serial: S/N:1796
- Measurement SW: DASY52, Version 52.8 (8); SEMCAD X Version 14.6.10 (7331)

Pin=250mW/Area Scan (61x61x1): Interpolated grid: dx=1.200 mm, dy=1.200 mm
Maximum value of SAR (interpolated) = 25.5 W/kg

Pin=250mW/Zoom Scan (7x7x7)/Cube 0: Measurement grid: dx=5mm, dy=5mm, dz=5mm
Reference Value = 116.3 V/m; Power Drift = -0.02 dB
Peak SAR (extrapolated) = 32.4 W/kg
SAR(1 g) = 14.4 W/kg; SAR(10 g) = 6.29 W/kg
Maximum value of SAR (measured) = 25.2 W/kg

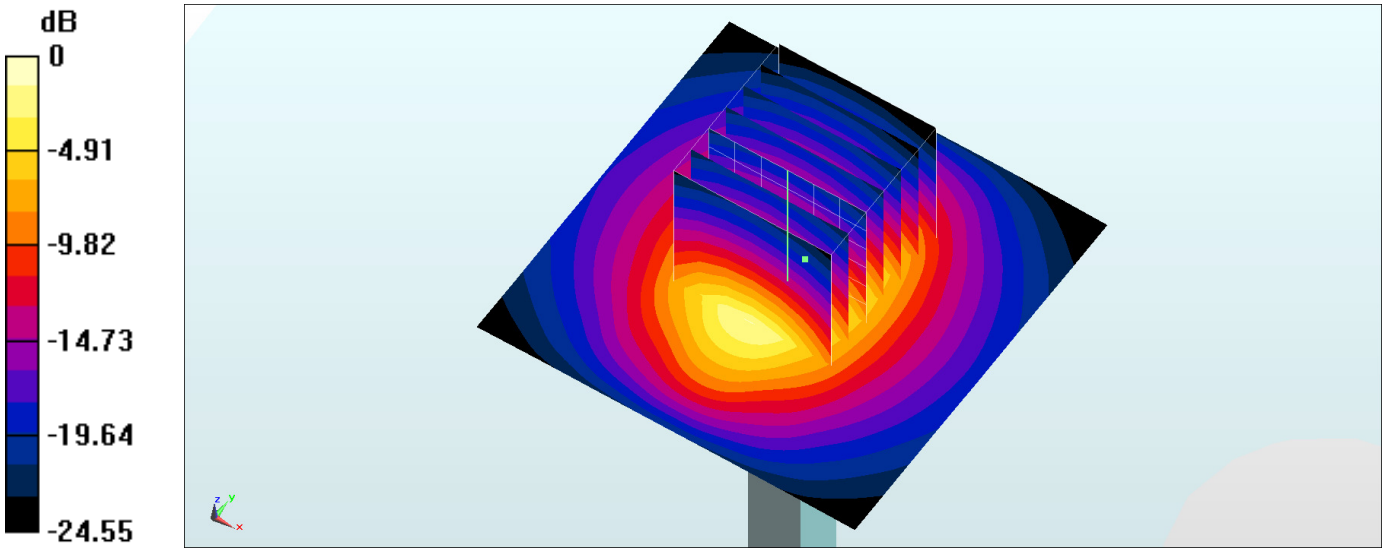

0 dB = 25.2 W/kg = 14.01 dBW/kg

System Check_Body_2600MHz

DUT: D2600V2-1008

Communication System: CW; Frequency: 2600 MHz;Duty Cycle: 1:1
Medium: MSL_2600_160730 Medium parameters used: f = 2600 MHz; σ = 2.181 S/m; ε_r = 52.21; ρ = 1000 kg/m^3
Ambient Temperature：23.3 ℃; Liquid Temperature：22.3 ℃

DASY5 Configuration
- Probe: EX3DV4 - SN3955; ConvF(7.23, 7.23, 7.23); Calibrated: 2015/11/24;
- Sensor-Surface: 1.4mm (Mechanical Surface Detection)
- Electronics: DAE4 Sn778; Calibrated: 2016/5/12
- Phantom: SAM_Right; Type: QD000P40CD; Serial: S/N:1801
- Measurement SW: DASY52, Version 52.8 (8); SEMCAD X Version 14.6.10 (7331)

Pin=250mW/Area Scan (71x71x1): Interpolated grid: dx=1.200 mm, dy=1.200 mm
Maximum value of SAR (interpolated) = 24.2 W/kg

Pin=250mW/Zoom Scan (7x7x7)/Cube 0: Measurement grid: dx=5mm, dy=5mm, dz=5mm
Reference Value = 106.4 V/m; Power Drift = -0.10 dB
Peak SAR (extrapolated) = 30.7 W/kg
SAR(1 g) = 14.4 W/kg; SAR(10 g) = 6.47 W/kg
Maximum value of SAR (measured) = 24.6 W/kg

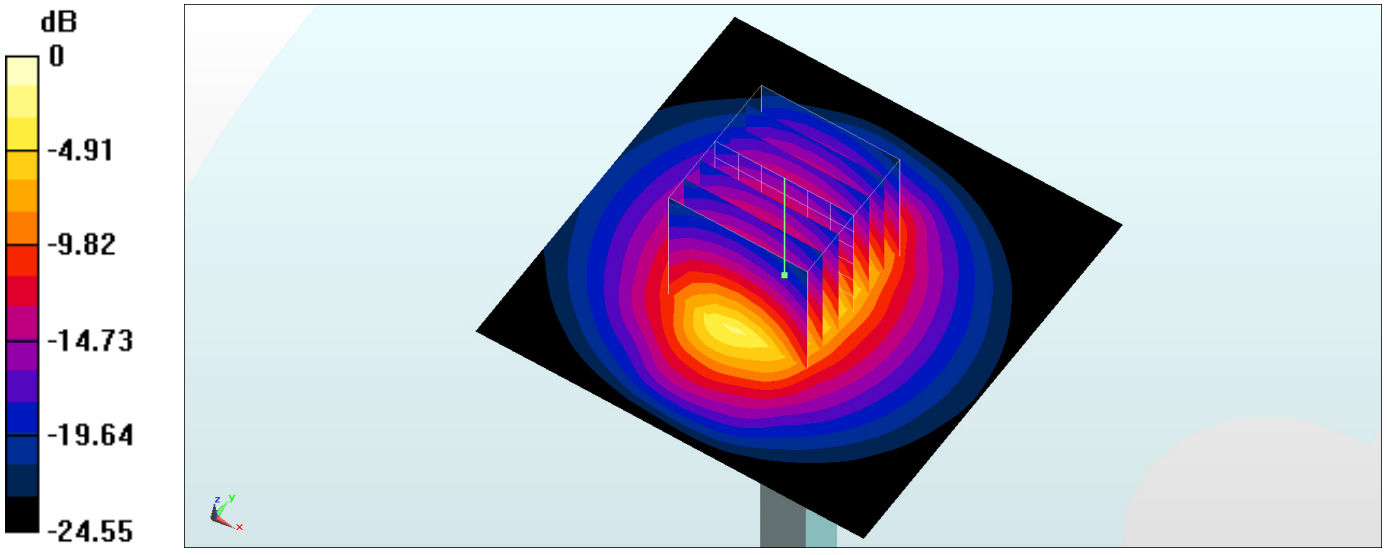

0 dB = 24.6 W/kg = 13.91 dBW/kg