Variant FCC RF Test Report

APPLICANT	:	Motorola Mobility LLC
EQUIPMENT	:	Mobile Cellular Phone
BRAND NAME	:	Motorola
MODEL NAME	:	9370, 9842
FCC ID	:	IHDT56VE2
STANDARD	:	FCC 47 CFR Part 2, 22(H), 24(E), 27(L)
CLASSIFICATION	:	PCS Licensed Transmitter Held to Ear (PCE)

This is a variant report which is only valid together with the original report. The product was received on Dec. 10, 2016 and testing was completed on Dec. 15, 2016. We, SPORTON INTERNATIONAL (KUNSHAN) INC., would like to declare that the tested sample has been evaluated in accordance with the test procedures given in ANSI / TIA / EIA-603-D-2010 and has been in compliance with the applicable technical standards.

The test results in this report apply exclusively to the tested model / sample. Without written approval of SPORTON INTERNATIONAL (KUNSHAN) INC., the test report shall not be reproduced except in full.

James Huang

Prepared by: James Huang / Manager

Approved by: Jones Tsai / Manager

Testing Laboratory 2627

SPORTON INTERNATIONAL (KUNSHAN) INC.

No. 3-2, PingXiang Road, Kunshan, Jiangsu Province, P. R. China

TABLE OF CONTENTS

REVISION HISTORY **3**

SUMMARY OF TEST RESULT **4**

1 GENERAL DESCRIPTION **5**

1.1 Applicant 5
1.2 Manufacturer 5
1.3 Product Feature of Equipment Under Test 5
1.4 Product Specification of Equipment Under Test 6
1.5 Specification of Accessory 7
1.6 Modification of EUT 7
1.7 Maximum EIRP Power, Frequency Tolerance, and Emission Designator 7
1.8 Testing Location 8
1.9 Applicable Standards 8

2 TEST CONFIGURATION OF EQUIPMENT UNDER TEST **9**

2.1 Test Mode 9
2.2 Connection Diagram of Test System 10
2.3 Support Unit used in test configuration 10

3 CONDUCTED TEST RESULT **11**

3.1 Measuring Instruments 11
3.2 Test Setup 11
3.3 Conducted Output Power and EIRP 12

4 RADIATED TEST ITEMS **13**

4.1 Measuring Instruments 13
4.2 Test Setup 13
4.3 Test Result of Radiated Test 13
4.4 Field Strength of Spurious Radiation Measurement 14

5 LIST OF MEASURING EQUIPMENT **15**

6 UNCERTAINTY OF EVALUATION **16**

APPENDIX A. TEST RESULTS OF CONDUCTED TEST

APPENDIX B. TEST RESULTS OF RADIATED TEST

APPENDIX C. TEST SETUP PHOTOGRAPHS

APPENDIX D. PRODUCT EQUALITY DECLARATION

APPENDIX E. ORIGINAL REPORT

REVISION HISTORY

REPORT NO.	VERSION	DESCRIPTION	ISSUED DATE
FG6O1212-11A	Rev. 01	This is a variant report for 9370, 9842. The product equality declaration could be referred to Appendix D. Based on the similarity between current and previous, only the worse cases of Conducted Power, EIRP and Radiated Spurious Emission from original test report (Sporton Report Number FG6O1212-02A) were verified for the differences.	Jan. 13, 2017

SUMMARY OF TEST RESULT

Report Section	FCC Rule	Description	Limit	Result	Remark
3.4	§2.1046	Conducted Output Power	Reporting Only	PASS	-
	§24.232(c)	Equivalent Isotropic Radiated Power	< 2 Watts	PASS	-
4.4	§2.1053 §22.917(a) §24.238(a) §27.53(h)	Field Strength of Spurious Radiation	< 43+10log10(P[Watts])	PASS	Under limit 50.50 dB at 7518.000 MHz

1 General Description

1.1 Applicant

Motorola Mobility LLC
222 W, Merchandise Mart Plaza, Chicago IL 60654 USA

1.2 Manufacturer

Motorola Mobility LLC
222 W, Merchandise Mart Plaza, Chicago IL 60654 USA

1.3 Product Feature of Equipment Under Test

Product Feature	
Equipment	Mobile Cellular Phone
Brand Name	Motorola
Model Name	9370, 9842
FCC ID	IHDT56VE2
EUT supports Radios application	GSM/GPRS/EGPRS/WCDMA/HSPA/DC-HSDPA/ HSPA+(16QAM uplink is not supported)/LTE/NFC/ WLAN2.4GHz 802.11b/g/n HT20 WLAN5GHz 802.11a/n HT20/HT40/ Bluetooth v3.0+EDR/Bluetooth v4.0 LE/ Bluetooth v4.2 LE
IMEI Code	Conducted: 351856080011521 Radiation: 351557080038217/351557080038255
HW Version	DVT2
SW Version	potter_oem_userdebug_7.0_NPN25.124_1787_intcfg-test-keys_oem
EUT Stage	Identical Prototype

Remark: The above EUT's information was declared by manufacturer. Please refer to the specifications or user's manual for more detailed description.

1.4 Product Specification of Equipment Under Test

Standards-related Product Specification	
Tx Frequency	**GSM/GPRS/EDGE:** 850: 824.2 MHz ~ 848.8 MHz 1900: 1850.2 MHz ~ 1909.8MHz **WCDMA:** Band V: 826.4 MHz ~ 846.6 MHz Band II: 1852.4 MHz ~ 1907.6 MHz Band IV: 1712.4 MHz ~ 1752.6 MHz
Rx Frequency	**GSM/GPRS/EDGE:** 850: 869.2 MHz ~ 893.8 MHz 1900: 1930.2 MHz ~ 1989.8 MHz **WCDMA:** Band V: 871.4 MHz ~ 891.6 MHz Band II: 1932.4 MHz ~ 1987.6 MHz Band IV: 2112.4 MHz ~ 2152.6 MHz
Maximum Output Power to Antenna	**GSM:** 1900: 30.19 dBm
Antenna Type	Fixed Internal Antenna
Antenna Gain	PCS Band: -0.44 dBi
Type of Modulation	GSM: GMSK GPRS: GMSK EDGE: GMSK / 8PSK WCDMA: BPSK (Uplink) HSDPA/DC-HSDPA: QPSK (Uplink) HSUPA: QPSK (Uplink) HSPA+ : 16QAM (uplink is not supported) DC-HSDPA : 64QAM

1.5 Specification of Accessory

Specification of Accessory				
AC Adapter	**Brand Name**	Motorola(Salom)	**Model Name**	SSW-2680US/SSW-2680UK/ SSW-2680EU/SSW-2680MX/ SSW-2680AR
	Power Rating	I/P: 100-240 Vac, 500mA, O/P: 5 Vdc,1600mA or 9Vdc,1600mA or 12Vdc,1200mA		
Battery 1	**Brand Name**	motorola(SUNWODA)	**Model Name**	HG40
	Power Rating	3.8Vdc,2810/3000mAh (Min/Typ)	**Type**	Li-ion
Battery 2	**Brand Name**	motorola(Amperex)	**Model Name**	HG40
	Power Rating	3.8Vdc,2810/3000mAh (Min/Typ)	**Type**	Li-ion
USB Cable	**Brand Name**	Motorola	**Model Name**	SKN6461A
	Signal Line Type	1.0 meter, non-shielded cable, without ferrite core		
Earphone	**Brand Name**	Motorola(Jiangxi Lianchuang)	**Model Name**	MEMD1532B080008
	Signal Line Type	1.2 meter, non-shielded cable, without ferrite core		

1.6 Modification of EUT

No modifications are made to the EUT during all test items.

1.7 Maximum EIRP Power, Frequency Tolerance, and Emission Designator

FCC Rule	System	Type of Modulation	Maximum EIRP (W)	Frequency Tolerance (ppm)	Emission Designator
Part 24E	GSM1900 GSM	GMSK	0.9441	-	-

1.8 Testing Location

Test Site	SPORTON INTERNATIONAL (KUNSHAN) INC.	
Test Site Location	No. 3-2, PingXiang Road, Kunshan, Jiangsu Province, P. R. China TEL: +86-0512-5790-0158 FAX: +86-0512-5790-0958	
Test Site No.	**Sporton Site No.**	**FCC Registration No.**
	03CH03-KS	306251

Note: The test site complies with ANSI C63.4 2014 requirement.

1.9 Applicable Standards

According to the specifications of the manufacturer, the EUT must comply with the requirements of the following standards:

- 47 CFR Part 2, 22(H), 24(E), 27(L)
- ANSI / TIA / EIA-603-D-2010
- FCC KDB 971168 D01 Power Meas. License Digital Systems v02r02
- FCC KDB 412172 D01 Determining ERP and EIRP v01r01

Remark:

1. All test items were verified and recorded according to the standards and without any deviation during the test.
2. This EUT has also been tested and complied with the requirements of FCC Part 15, Subpart B, recorded in a separate test report.

2 Test Configuration of Equipment Under Test

2.1 Test Mode

Antenna port conducted and radiated test items were performed according to KDB 971168 D01 Power Meas. License Digital Systems v02r02 with maximum output power.

Radiated measurements were performed with rotating EUT in different three orthogonal test planes to find the maximum emission.

Radiated emissions were investigated as following frequency range:

1. 30 MHz to 10th harmonic for GSM1900.

All modes and data rates and positions were investigated.

Test Modes		
Band	**Radiated TCs**	**Conducted TCs**
GSM 1900	■ GSM Link	■ GSM Link

2.2 Connection Diagram of Test System

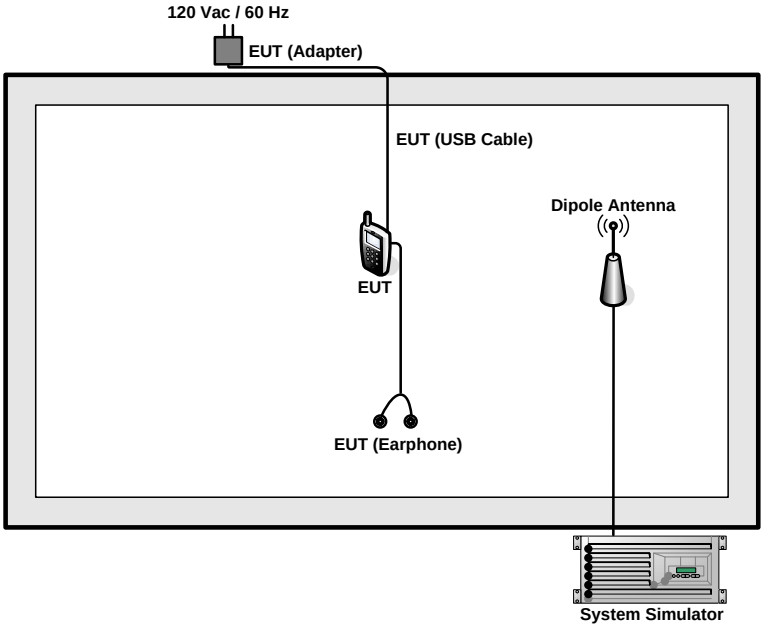

2.3 Support Unit used in test configuration

Item	Equipment	Trade Name	Model No.	FCC ID	Data Cable	Power Cord
1.	System Simulator	R&S	CMU 200	N/A	N/A	Unshielded, 1.8 m

3 Conducted Test Result

3.1 Measuring Instruments

See list of measuring instruments of this test report.

3.2 Test Setup

3.2.1 Conducted Output Power

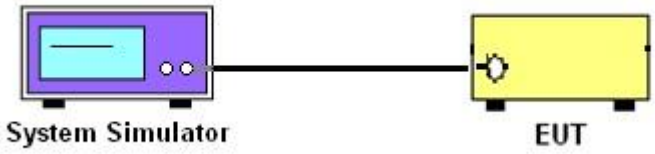

3.2.2 Test Result of Conducted Test

Please refer to Appendix A.

3.3 Conducted Output Power and EIRP

3.3.1 Description of the Conducted Output Power and EIRP

A system simulator was used to establish communication with the EUT. Its parameters were set to enforce EUT transmitting at the maximum power. The measured power in the radio frequency on the transmitter output terminals shall be reported.

The EIRP of mobile transmitters must not exceed 2 Watts for GSM1900.

According to KDB 412172 D01 Power Approach,

EIRP = $P_T + G_T – L_C$, ERP = EIRP -2.15, where

P_T = transmitter output power in dBm

G_T = gain of the transmitting antenna in dBi

L_C = signal attenuation in the connecting cable between the transmitter and antenna in dB

3.3.2 Test Procedures

1. The transmitter output port was connected to the system simulator.
2. Set EUT at maximum power through system simulator.
3. Select lowest, middle, and highest channels for each band and different modulation.
4. Measure the maximum burst average power for GSM and maximum average power for other modulation signal.

4 Radiated Test Items

4.1 Measuring Instruments

See list of measuring instruments of this test report.

4.2 Test Setup

4.2.1 For radiated test from 30MHz to 1GHz

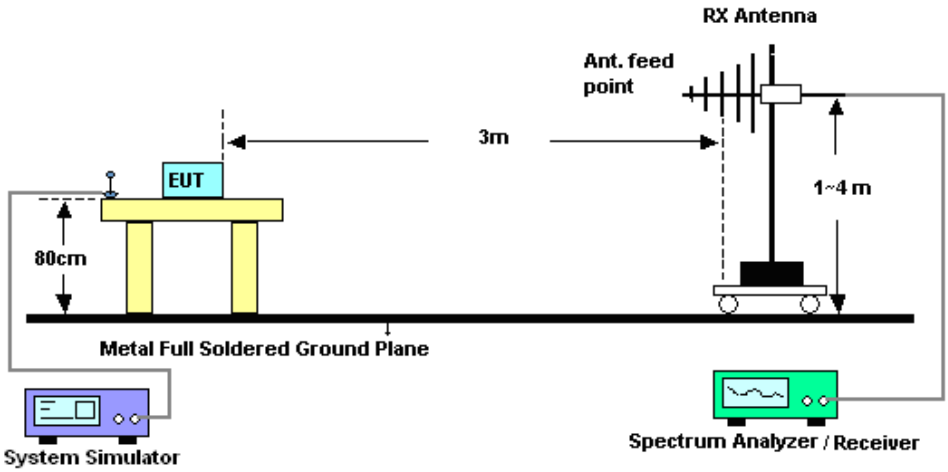

4.2.2 For radiated test above 1GHz

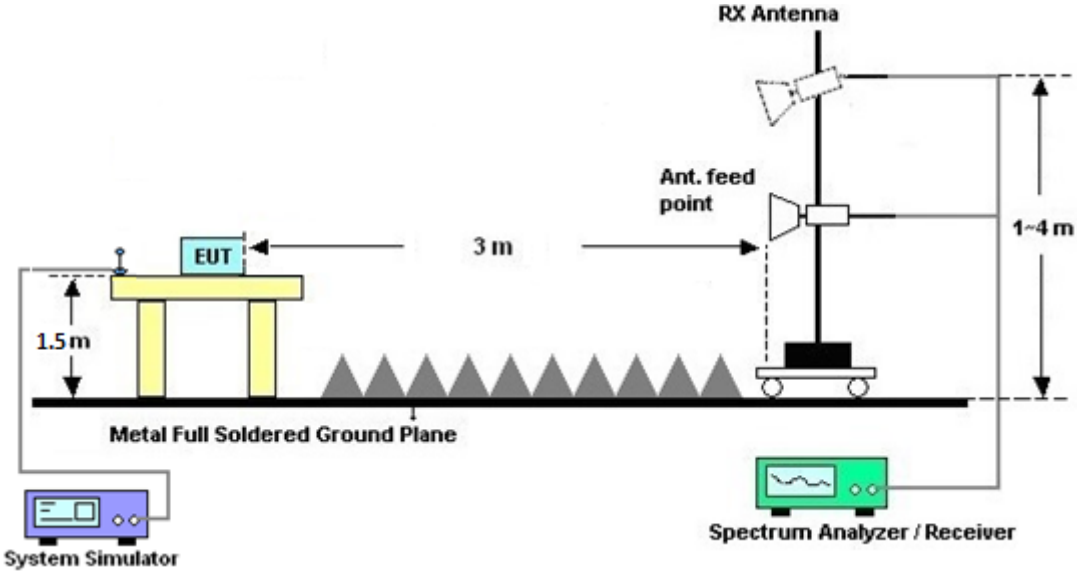

4.3 Test Result of Radiated Test

Please refer to Appendix B.

4.4 Field Strength of Spurious Radiation Measurement

4.4.1 Description of Field Strength of Spurious Radiated Measurement

The power of any emission outside of the authorized operating frequency ranges must be attenuated below the transmitter power (P) by a factor of at least 43 + 10 log (P) dB. The spectrum is scanned from 30 MHz up to a frequency including its 10th harmonic.

4.4.2 Test Procedures

1. The testing follows FCC KDB 971168 D01 v02r02 Section 5.8 and ANSI / TIA-603-D-2010 Section 2.2.12.
2. The EUT was placed on a rotatable wooden table 0.8 meters for frequency below 1GHz and 1.5 meter for frequency above 1GHz above the ground.
3. The EUT was set 3 meters from the receiving antenna, which was mounted on the antenna tower.
4. The table was rotated 360 degrees to determine the position of the highest spurious emission.
5. The height of the receiving antenna is varied between one meter and four meters to search for the maximum spurious emission for both horizontal and vertical polarizations.
6. Make the measurement with the spectrum analyzer's RBW = 1MHz, VBW = 3MHz, taking record of maximum spurious emission.
7. A horn antenna was substituted in place of the EUT and was driven by a signal generator.
8. Tune the output power of signal generator to the same emission level with EUT maximum spurious emission.
9. Taking the record of output power at antenna port.
10. Repeat step 7 to step 8 for another polarization.
11. EIRP (dBm) = S.G. Power – Tx Cable Loss + Tx Antenna Gain
12. ERP (dBm) = EIRP - 2.15
13. The RF fundamental frequency should be excluded against the limit line in the operating frequency band.
14. The limit line is derived from 43 + 10log(P) dB below the transmitter power P(Watts)

    = P(W) - [43 + 10log(P)] (dB)

    = [30 + 10log(P)] (dBm) - [43 + 10log(P)] (dB)

    = -13dBm.

5 List of Measuring Equipment

Instrument	Manufacturer	Model No.	Serial No.	Characteristics	Calibration Date	Test Date	Due Date	Remark
EXA Spectrum Analyzer	Keysight	N9010A	MY55150244	10Hz~44GHz	Apr. 22, 2016	Dec. 15, 2016	Apr. 21, 2017	Radiation (03CH03-KS)
Bilog Antenna	TeseQ	CBL6112D	35406	25MHz~2GHz	Apr. 16, 2016	Dec. 15, 2016	Apr. 15, 2017	Radiation (03CH03-KS)
Horn Antenna	Schwarzbeck	BBHA9120D	9120D-1356	1GHz~18GHz	Apr. 16, 2016	Dec. 15, 2016	Apr. 15, 2017	Radiation (03CH03-KS)
SHF-EHF Horn	Schwarzbeck	BBHA 9170	BBHA170249	15GHz~40GHz	Mar. 03, 2016	Dec. 15, 2016	Mar. 02, 2017	Radiation (03CH03-KS)
Amplifier	SONOMA	310N	187289	9kHz~1GHz	Aug. 09, 2016	Dec. 15, 2016	Aug. 08, 2017	Radiation (03CH03-KS)
Amplifier	Agilent	8449B	3008A02370	1GHz~26.5GHz	Oct. 13, 2016	Dec. 15, 2016	Oct. 12, 2017	Radiation (03CH03-KS)
AC Power Source	Chroma	61601	F104090004	N/A	NCR	Dec. 15, 2016	NCR	Radiation (03CH03-KS)
Turn Table	ChamPro	EM 1000-T	060762-T	0~360 degree	NCR	Dec. 15, 2016	NCR	Radiation (03CH03-KS)
Antenna Mast	ChamPro	EM 1000-A	060762-A	1 m~4 m	NCR	Dec. 15, 2016	NCR	Radiation (03CH03-KS)

NCR: No Calibration Required

6 Uncertainty of Evaluation

Uncertainty of Radiated Emission Measurement (25 MHz ~ 1000 MHz)

Measuring Uncertainty for a Level of Confidence of 95% (U = 2Uc(y))	2.8dB

Uncertainty of Radiated Emission Measurement (1GHz ~ 40GHz)

Measuring Uncertainty for a Level of Confidence of 95% (U = 2Uc(y))	3.2dB

Appendix A. Test Results of Conducted Test

Conducted Output Power(Average power)

Conducted Power (*Unit: dBm)			
Band	**GSM1900**		
Channel	**512**	**661**	**810**
Frequency	**1850.2**	**1880.0**	**1909.8**
GSM	29.51	30.09	**30.19**
GPRS class 8	29.48	30.05	30.06
GPRS class 10	26.49	26.53	26.49
GPRS class 11	24.71	25.12	24.67
GPRS class 12	23.23	23.05	22.88
EGPRS class 8	25.62	26.02	25.99
EGPRS class 10	25.48	25.40	25.27
EGPRS class 11	24.08	24.43	24.26
EGPRS class 12	22.72	22.41	22.12

EIRP

GSM1900 (G_T - L_C= -0.44dB)			
Channel	512	661	810
	(Low)	(Mid)	(High)
Frequency (MHz)	1850.2	1880	1909.8
Conducted Power (dBm)	29.51	30.09	30.19
Conducted Power (Watts)	0.8933	1.0209	1.0447
EIRP(dBm)	29.07	29.65	29.75
EIRP(Watts)	0.8072	0.9226	0.9441

Appendix B. Test Results of Radiated Test

Radiated Spurious Emission

GSM1900 (GSM)									
Channel	Frequency (MHz)	EIRP (dBm)	Limit (dBm)	Over Limit (dB)	SPA Reading (dBm)	S.G. Power (dBm)	TX Cable loss (dB)	TX Antenna Gain (dBi)	Polarization (H/V)
Middle	3762	-65.96	-13	-52.96	-69.47	-70.95	1.88	6.87	H
	5640	-67.18	-13	-54.18	-75.37	-74.48	2.38	9.68	H
	7518	-63.50	-13	-50.50	-75.53	-72.57	2.74	11.81	H
	3762	-68.32	-13	-55.32	-72.11	-73.31	1.88	6.87	V
	5640	-66.55	-13	-53.55	-75.12	-73.85	2.38	9.68	V
	7518	-63.97	-13	-50.97	-74.68	-73.04	2.74	11.81	V

Remark: Spurious emissions within 30-1000MHz were found more than 20dB below limit line.

Appendix D. Product Equality Declaration

Appendix E. Original Report

Please refer to Sporton report number FG6O1212-02A which is issued separately.