System Check_Head_750MHz

DUT: D750V3-1012

Communication System: CW; Frequency: 750 MHz;Duty Cycle: 1:1
Medium: HSL_750_170222 Medium parameters used: f = 750 MHz; σ = 0.884 S/m; ε_r = 43.451; ρ = 1000 kg/m^3
Ambient Temperature：23.6 ℃； Liquid Temperature：22.6 ℃

DASY5 Configuration
- Probe: EX3DV4 - SN3955; ConvF(10.65, 10.65, 10.65); Calibrated: 2016/11/24;
- Sensor-Surface: 1.4mm (Mechanical Surface Detection)
- Electronics: DAE4 Sn1399; Calibrated: 2016/11/17
- Phantom: SAM_RIGHT; Type: QD000P40CD; Serial: 1719
- Measurement SW: DASY52, Version 52.8 (8); SEMCAD X Version 14.6.10 (7373)

Pin=250mW/Area Scan (61x61x1): Interpolated grid: dx=1.500 mm, dy=1.500 mm
Maximum value of SAR (interpolated) = 2.81 W/kg

Pin=250mW/Zoom Scan (5x5x7)/Cube 0: Measurement grid: dx=8mm, dy=8mm, dz=5mm
Reference Value = 58.67 V/m; Power Drift = 0.07 dB
Peak SAR (extrapolated) = 3.20 W/kg
SAR(1 g) = 2.15 W/kg; SAR(10 g) = 1.45 W/kg
Maximum value of SAR (measured) = 2.84 W/kg

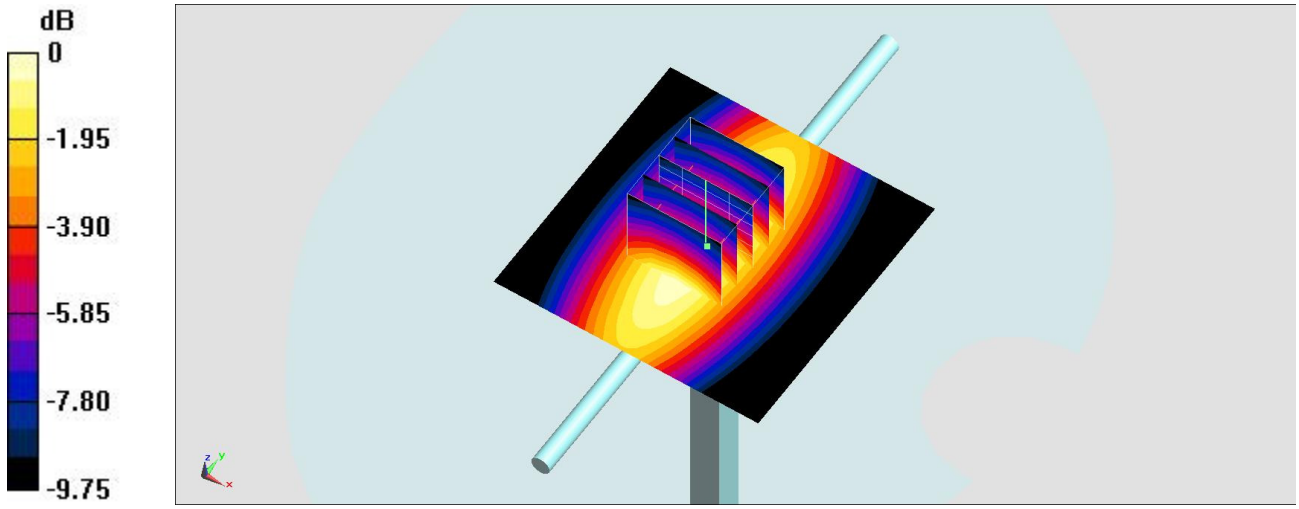

0 dB = 2.84 W/kg = 4.53 dBW/kg

System Check_Body_750MHz

DUT: D750V3-1012

Communication System: CW ; Frequency: 750 MHz;Duty Cycle: 1:1
Medium: MSL_750_170304 Medium parameters used: f = 750 MHz; σ = 0.969 S/m; ε_r = 53.07; ρ = 1000 kg/m^3
Ambient Temperature：23.7 ℃; Liquid Temperature：22.7 ℃

DASY5 Configuration
- Probe: EX3DV4 - SN3955; ConvF(10.42, 10.42, 10.42); Calibrated: 2016/11/24;
- Sensor-Surface: 1.4mm (Mechanical Surface Detection)
- Electronics: DAE4 Sn1399; Calibrated: 2016/11/17
- Phantom: SAM_RIGHT; Type: QD000P40CD; Serial: 1719
- Measurement SW: DASY52, Version 52.8 (8); SEMCAD X Version 14.6.10 (7373)

Pin=250mW/Area Scan (61x61x1): Interpolated grid: dx=1.500 mm, dy=1.500 mm
Maximum value of SAR (interpolated) = 3.13 W/kg

Pin=250mW/Zoom Scan (5x5x7)/Cube 0: Measurement grid: dx=8mm, dy=8mm, dz=5mm
Reference Value = 55.35 V/m; Power Drift = 0.02 dB
Peak SAR (extrapolated) = 3.47 W/kg
SAR(1 g) = 2.33 W/kg; SAR(10 g) = 1.56 W/kg
Maximum value of SAR (measured) = 3.08 W/kg

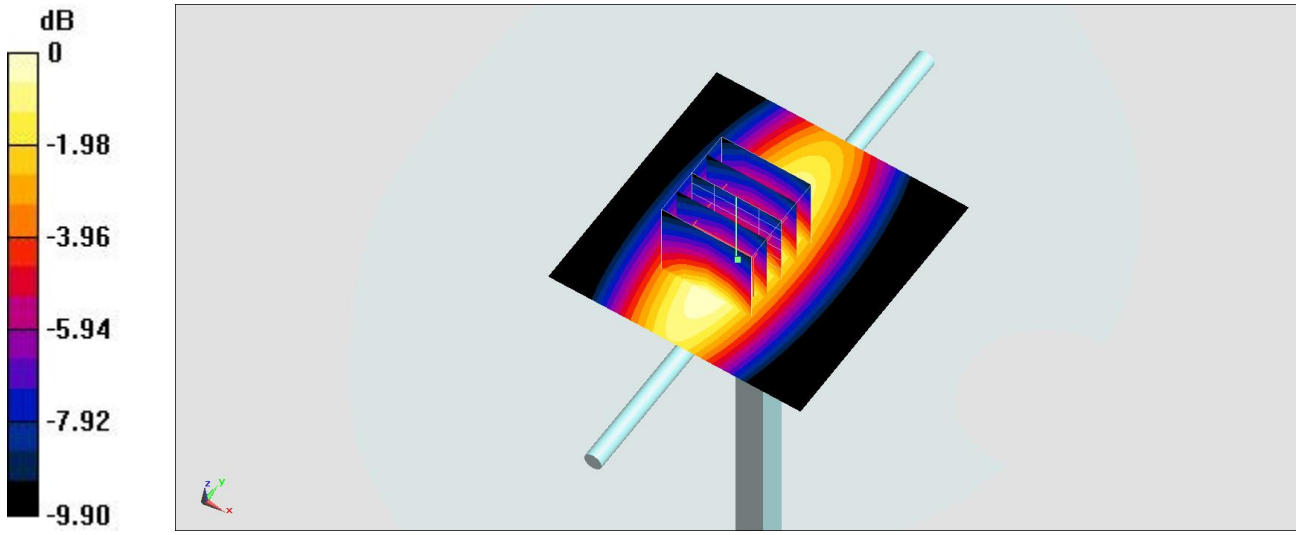

0 dB = 3.08 W/kg = 4.89 dBW/kg

System Check_Head_835MHz

DUT: D835V2-499

Communication System: CW; Frequency: 835 MHz;Duty Cycle: 1:1
Medium: HSL_850_170219 Medium parameters used: f = 835 MHz; σ = 0.886 S/m; ε_r = 43.265; ρ = 1000 kg/m^3
Ambient Temperature：23.4 ℃； Liquid Temperature：22.4 ℃

DASY5 Configuration
- Probe: EX3DV4 - SN3955; ConvF(10.33, 10.33, 10.33); Calibrated: 2016/11/24;
- Sensor-Surface: 1.4mm (Mechanical Surface Detection)
- Electronics: DAE4 Sn1399; Calibrated: 2016/11/17
- Phantom: SAM_RIGHT; Type: QD000P40CD; Serial: 1719
- Measurement SW: DASY52, Version 52.8 (8); SEMCAD X Version 14.6.10 (7373)

Pin=250mW/Area Scan (61x61x1): Interpolated grid: dx=1.500 mm, dy=1.500 mm
Maximum value of SAR (interpolated) = 3.06 W/kg

Pin=250mW/Zoom Scan (5x5x7)/Cube 0: Measurement grid: dx=8mm, dy=8mm, dz=5mm
Reference Value = 61.18 V/m; Power Drift = -0.08 dB
Peak SAR (extrapolated) = 3.44 W/kg
SAR(1 g) = 2.3 W/kg; SAR(10 g) = 1.52 W/kg
Maximum value of SAR (measured) = 3.03 W/kg

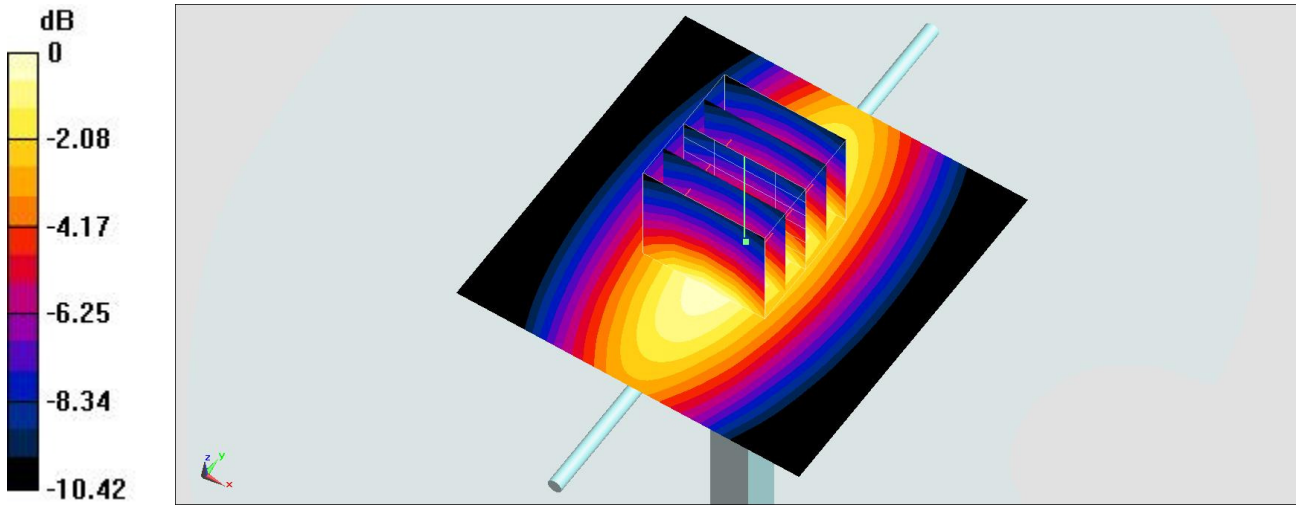

0 dB = 3.03 W/kg = 4.81 dBW/kg

System Check_Head_835MHz

DUT: D835V2-499

Communication System: CW; Frequency: 835 MHz;Duty Cycle: 1:1
Medium: HSL_850_170316 Medium parameters used: f = 835 MHz; σ = 0.9 S/m; ε_r = 42.55; ρ = 1000 kg/m^3
Ambient Temperature：23.5 ℃； Liquid Temperature：22.5 ℃

DASY5 Configuration
- Probe: ES3DV3 - SN3270; ConvF(6.03, 6.03, 6.03); Calibrated: 2016/8/26;
- Sensor-Surface: 3mm (Mechanical Surface Detection)
- Electronics: DAE4 Sn778; Calibrated: 2016/5/12
- Phantom: SAM_RIGHT; Type: QD000P40CD; Serial: 1719
- Measurement SW: DASY52, Version 52.8 (8); SEMCAD X Version 14.6.10 (7373)

Pin=250mW/Area Scan (61x61x1): Interpolated grid: dx=1.500 mm, dy=1.500 mm
Maximum value of SAR (interpolated) = 3.04 W/kg

Pin=250mW/Zoom Scan (5x5x7)/Cube 0: Measurement grid: dx=8mm, dy=8mm, dz=5mm
Reference Value = 59.55 V/m; Power Drift = -0.08 dB
Peak SAR (extrapolated) = 3.65 W/kg
SAR(1 g) = 2.44 W/kg; SAR(10 g) = 1.61 W/kg
Maximum value of SAR (measured) = 2.83 W/kg

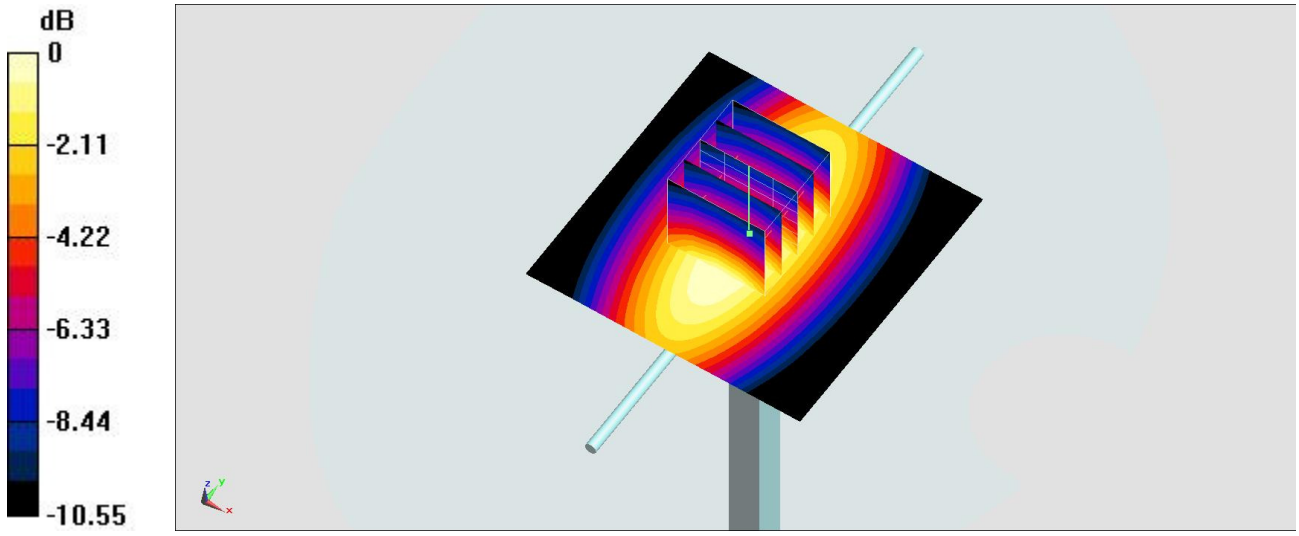

0 dB = 2.83 W/kg = 4.52 dBW/kg

System Check_Body_835MHz

DUT: D835V2-499

Communication System: CW; Frequency: 835 MHz;Duty Cycle: 1:1
Medium: MSL_850_170302 Medium parameters used: f = 835 MHz; σ = 0.983 S/m; ε_r = 53.989; ρ = 1000 kg/m^3
Ambient Temperature：23.2 ℃； Liquid Temperature：22.2 ℃

DASY5 Configuration
- Probe: EX3DV4 - SN3578; ConvF(9.53, 9.53, 9.53); Calibrated: 2016/5/11;
- Sensor-Surface: 1.4mm (Mechanical Surface Detection)
- Electronics: DAE4 Sn914; Calibrated: 2017/1/6
- Phantom: SAM_RIGHT; Type: QD000P40CD; Serial: 1719
- Measurement SW: DASY52, Version 52.8 (8); SEMCAD X Version 14.6.10 (7373)

Pin=250mW/Area Scan (61x61x1): Interpolated grid: dx=1.500 mm, dy=1.500 mm
Maximum value of SAR (interpolated) = 3.57 W/kg

Pin=250mW/Zoom Scan (5x5x7)/Cube 0: Measurement grid: dx=8mm, dy=8mm, dz=5mm
Reference Value = 61.52 V/m; Power Drift = -0.16 dB
Peak SAR (extrapolated) = 3.76 W/kg
SAR(1 g) = 2.5 W/kg; SAR(10 g) = 1.66 W/kg
Maximum value of SAR (measured) = 3.30 W/kg

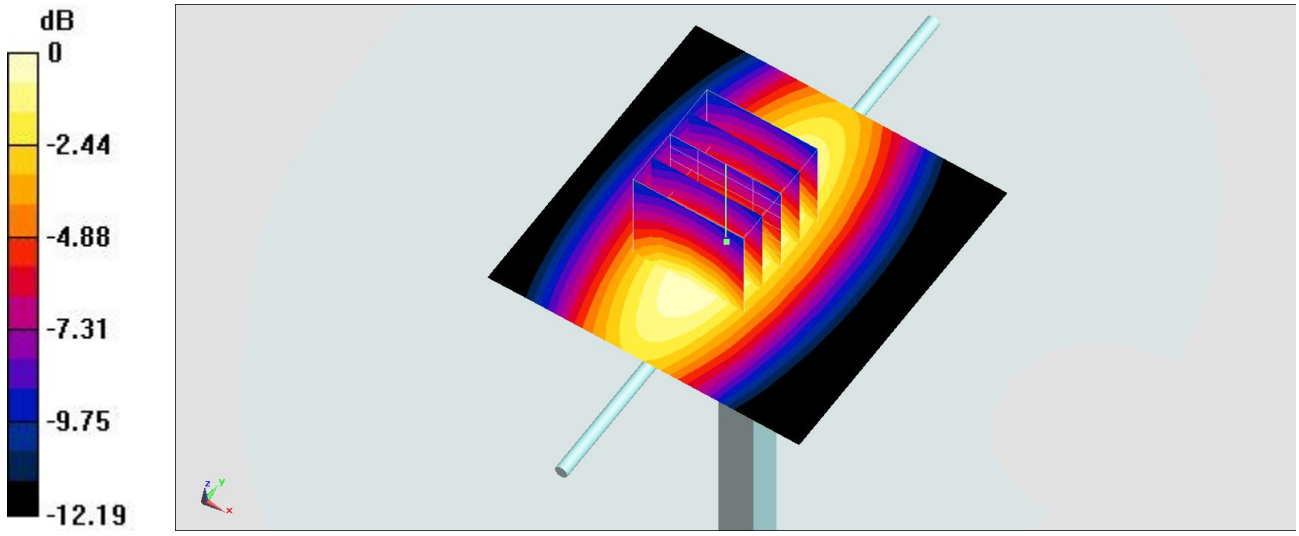

0 dB = 3.30 W/kg = 5.19 dBW/kg

System Check_Body_835MHz

DUT: D835V2-499

Communication System: CW ; Frequency: 835 MHz;Duty Cycle: 1:1
Medium: MSL_850_170302 Medium parameters used: f = 835 MHz; σ = 0.983 S/m; ε_r = 53.989; ρ = 1000 kg/m^3
Ambient Temperature：23.2 ℃； Liquid Temperature：22.2 ℃

DASY5 Configuration
- Probe: EX3DV4 - SN3955; ConvF(10.18, 10.18, 10.18); Calibrated: 2016/11/24;
- Sensor-Surface: 1.4mm (Mechanical Surface Detection)
- Electronics: DAE4 Sn1399; Calibrated: 2016/11/17
- Phantom: SAM_RIGHT; Type: QD000P40CD; Serial: 1719
- Measurement SW: DASY52, Version 52.8 (8); SEMCAD X Version 14.6.10 (7373)

Pin=250mW/Area Scan (61x61x1): Interpolated grid: dx=1.500 mm, dy=1.500 mm
Maximum value of SAR (interpolated) = 3.50 W/kg

Pin=250mW/Zoom Scan (5x5x7)/Cube 0: Measurement grid: dx=8mm, dy=8mm, dz=5mm
Reference Value = 60.38 V/m; Power Drift = 0.01 dB
Peak SAR (extrapolated) = 3.78 W/kg
SAR(1 g) = 2.52 W/kg; SAR(10 g) = 1.68 W/kg
Maximum value of SAR (measured) = 3.34 W/kg

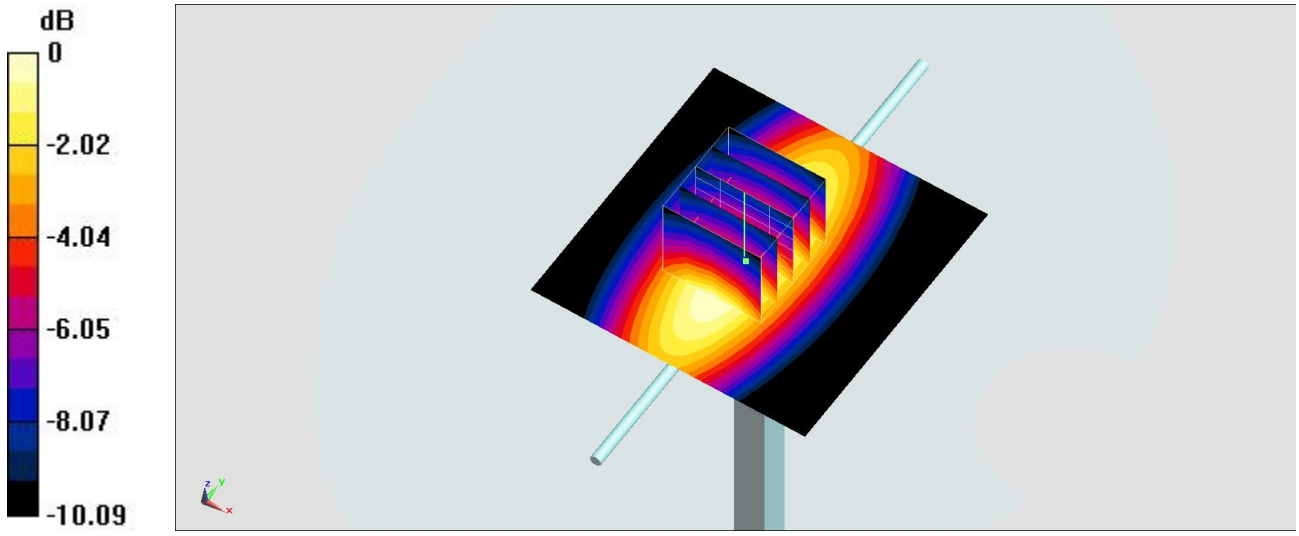

0 dB = 3.34 W/kg = 5.24 dBW/kg

System Check_Body_835MHz

DUT: D835V2-499

Communication System: CW ; Frequency: 835 MHz;Duty Cycle: 1:1
Medium: MSL_850_170303 Medium parameters used: f = 835 MHz; σ = 0.976 S/m; ε_r = 54.101; ρ = 1000 kg/m^3
Ambient Temperature：23.4 ℃； Liquid Temperature：22.4 ℃

DASY5 Configuration
- Probe: EX3DV4 - SN3955; ConvF(10.18, 10.18, 10.18); Calibrated: 2016/11/24;
- Sensor-Surface: 1.4mm (Mechanical Surface Detection)
- Electronics: DAE4 Sn1399; Calibrated: 2016/11/17
- Phantom: SAM_RIGHT; Type: QD000P40CD; Serial: 1719
- Measurement SW: DASY52, Version 52.8 (8); SEMCAD X Version 14.6.10 (7373)

Pin=250mW/Area Scan (61x61x1): Interpolated grid: dx=1.500 mm, dy=1.500 mm
Maximum value of SAR (interpolated) = 3.52 W/kg

Pin=250mW/Zoom Scan (5x5x7)/Cube 0: Measurement grid: dx=8mm, dy=8mm, dz=5mm
Reference Value = 60.79 V/m; Power Drift = 0.01 dB
Peak SAR (extrapolated) = 3.78 W/kg
SAR(1 g) = 2.52 W/kg; SAR(10 g) = 1.67 W/kg
Maximum value of SAR (measured) = 3.34 W/kg

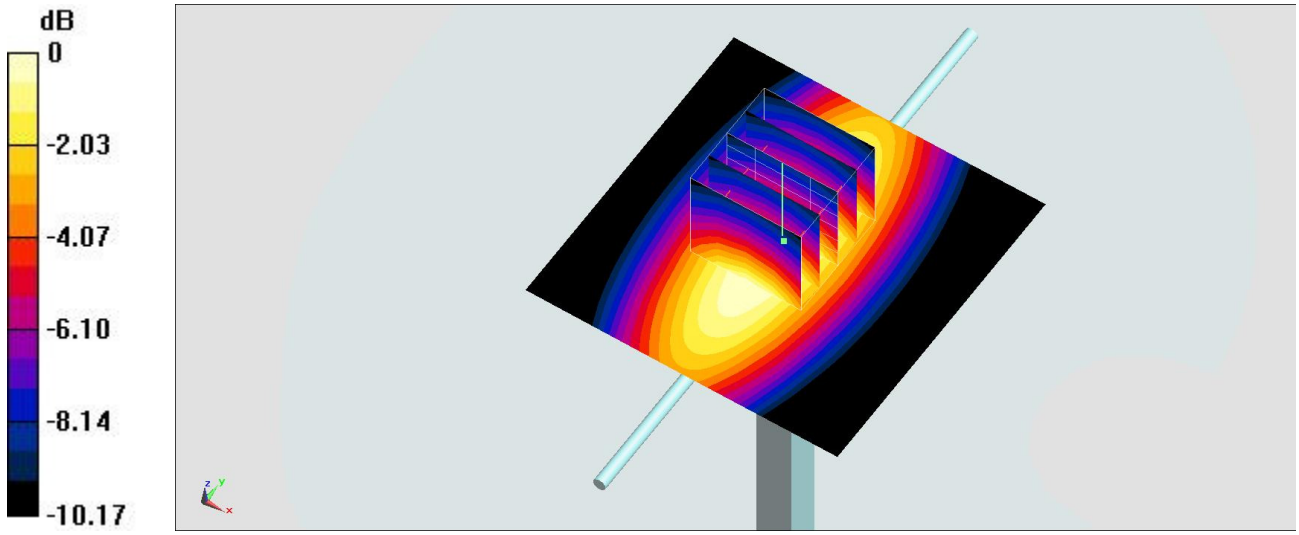

0 dB = 3.34 W/kg = 5.24 dBW/kg

System Check_Body_835MHz

DUT: D835V2-499

Communication System: CW; Frequency: 835 MHz;Duty Cycle: 1:1
Medium: MSL_850_170309 Medium parameters used: f = 835 MHz; σ = 1.015 S/m; ε_r = 53.537; ρ = 1000 kg/m^3
Ambient Temperature：23.5 ℃； Liquid Temperature：22.5 ℃

DASY5 Configuration
- Probe: EX3DV4 - SN3931; ConvF(10.14, 10.14, 10.14); Calibrated: 2016/10/3;
- Sensor-Surface: 1.4mm (Mechanical Surface Detection)
- Electronics: DAE3 Sn577; Calibrated: 2016/9/28
- Phantom: SAM_RIGHT; Type: QD000P40CD; Serial: 1719
- Measurement SW: DASY52, Version 52.8 (8); SEMCAD X Version 14.6.10 (7373)

Pin=250mW/Area Scan (61x61x1): Interpolated grid: dx=1.500 mm, dy=1.500 mm
Maximum value of SAR (interpolated) = 3.29 W/kg

Pin=250mW/Zoom Scan (5x5x7)/Cube 0: Measurement grid: dx=8mm, dy=8mm, dz=5mm
Reference Value = 58.11 V/m; Power Drift = -0.01 dB
Peak SAR (extrapolated) = 3.83 W/kg
SAR(1 g) = 2.55 W/kg; SAR(10 g) = 1.66 W/kg
Maximum value of SAR (measured) = 3.31 W/kg

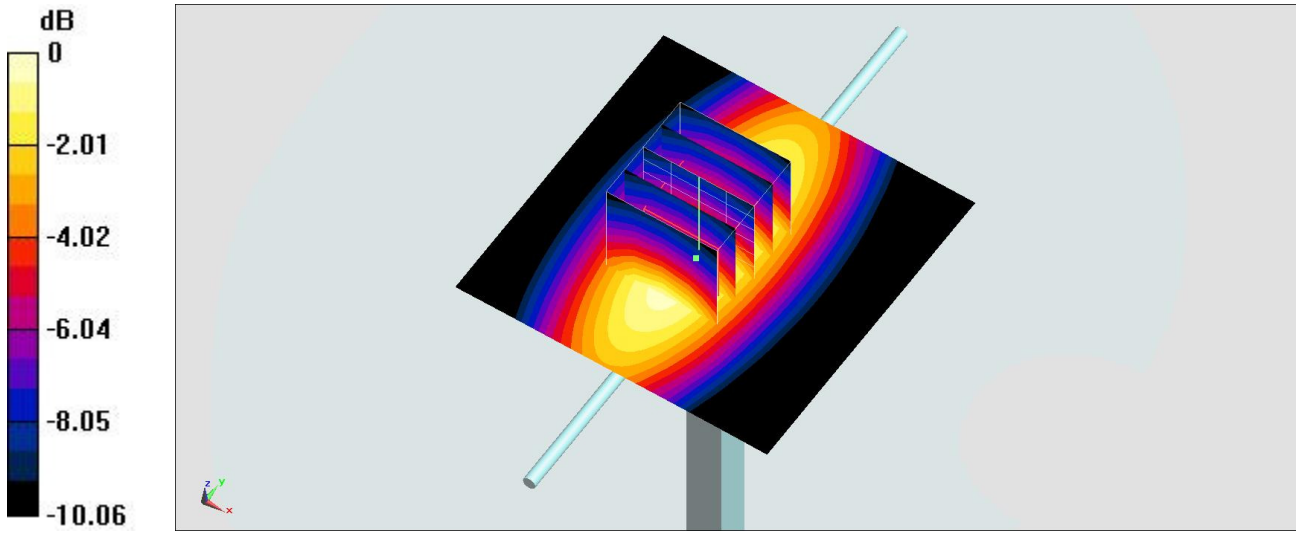

0 dB = 3.31 W/kg = 5.20 dBW/kg

System Check_Body_835MHz

DUT: D835V2-499

Communication System: CW; Frequency: 835 MHz;Duty Cycle: 1:1
Medium: MSL_850_170316 Medium parameters used: f = 835 MHz; σ = 0.947 S/m; ε_r = 54.756; ρ = 1000 kg/m^3
Ambient Temperature：23.5 ℃； Liquid Temperature：22.5 ℃

DASY5 Configuration
- Probe: ES3DV3 - SN3270; ConvF(6.01, 6.01, 6.01); Calibrated: 2016/8/26;
- Sensor-Surface: 3mm (Mechanical Surface Detection)
- Electronics: DAE4 Sn778; Calibrated: 2016/5/12
- Phantom: SAM LEFT; Type: QD000P40CD; Serial: TP:1718
- Measurement SW: DASY52, Version 52.8 (8); SEMCAD X Version 14.6.10 (7373)

Pin=250mW/Area Scan (61x61x1): Interpolated grid: dx=1.500 mm, dy=1.500 mm
Maximum value of SAR (interpolated) = 2.93 W/kg

Pin=250mW/Zoom Scan (5x5x7)/Cube 0: Measurement grid: dx=8mm, dy=8mm, dz=5mm
Reference Value = 56.38 V/m; Power Drift = 0.01 dB
Peak SAR (extrapolated) = 3.60 W/kg
SAR(1 g) = 2.53 W/kg; SAR(10 g) = 1.69 W/kg
Maximum value of SAR (measured) = 2.92 W/kg

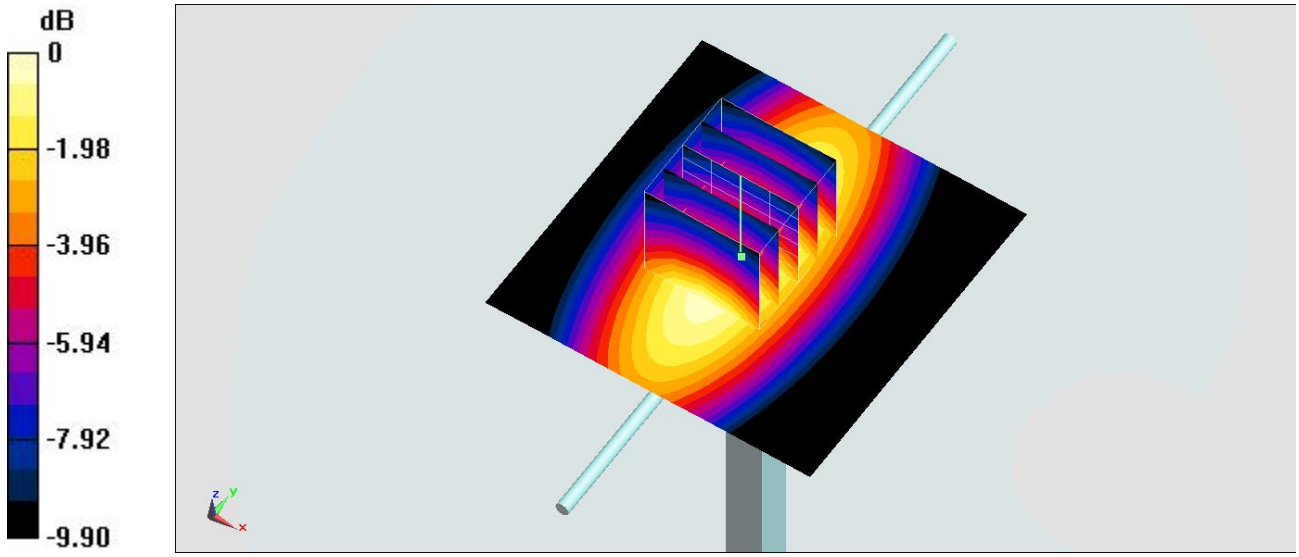

0 dB = 2.92 W/kg = 4.65 dBW/kg

Test Laboratory: Sporton International Inc. SAR/HAC Testing Lab Date: 2017/3/3

System Check_Head_1750MHz

DUT: D1750V2-1068

Communication System: CW ; Frequency: 1750 MHz;Duty Cycle: 1:1
Medium: HSL_1750_170303 Medium parameters used: f = 1750 MHz; σ = 1.37 S/m; ε_r = 38.672; ρ = 1000 kg/m^3
Ambient Temperature：23.4 ℃； Liquid Temperature：22.4 ℃

DASY5 Configuration:
- Probe: EX3DV4 - SN3925; ConvF(8.57, 8.57, 8.57); Calibrated: 2016/5/26;
- Sensor-Surface: 1.4mm (Mechanical Surface Detection)
- Electronics: DAE3 Sn495; Calibrated: 2016/5/27
- Phantom: SAM_Right; Type: SM000T01DA; Serial: TP:1303
- Measurement SW: DASY52, Version 52.8 (8);SEMCAD X Version 14.6.10 (7373)

Pin=250mW/Area Scan (61x61x1): Interpolated grid: dx=1.500 mm, dy=1.500 mm
Maximum value of SAR (interpolated) = 13.0 W/kg

Pin=250mW/Zoom Scan (5x5x7)/Cube 0: Measurement grid: dx=8mm, dy=8mm, dz=5mm
Reference Value = 96.70 V/m; Power Drift = 0.13 dB
Peak SAR (extrapolated) = 16.6 W/kg
SAR(1 g) = 9.3 W/kg; SAR(10 g) = 4.99 W/kg
Maximum value of SAR (measured) = 13.0 W/kg

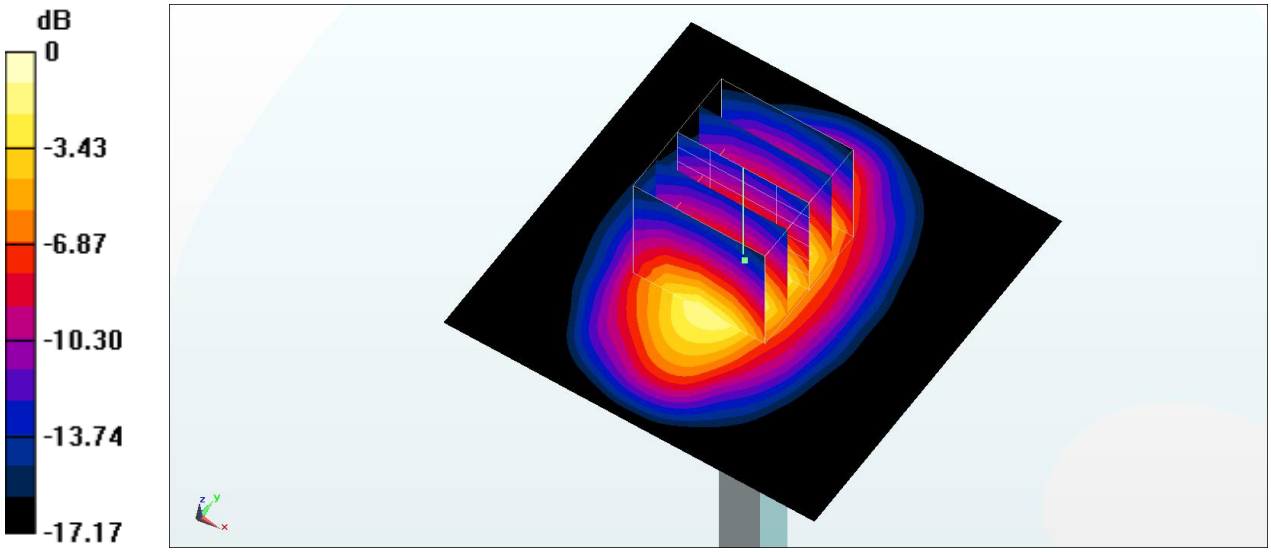

0 dB = 13.0 W/kg = 11.14 dBW/kg

System Check_Head_1750MHz

DUT: D1750V2-1068

Communication System: CW; Frequency: 1750 MHz;Duty Cycle: 1:1
Medium: HSL_1750_170308 Medium parameters used: f = 1750 MHz; σ = 1.364 S/m; ε_r = 38.512; ρ = 1000 kg/m^3
Ambient Temperature：23.3 ℃； Liquid Temperature：22.3 ℃

DASY5 Configuration
- Probe: EX3DV4 - SN3931; ConvF(8.68, 8.68, 8.68); Calibrated: 2016/10/3;
- Sensor-Surface: 1.4mm (Mechanical Surface Detection)
- Electronics: DAE3 Sn577; Calibrated: 2016/9/28
- Phantom: SAM LEFT; Type: QD000P40CD; Serial: TP:1718
- Measurement SW: DASY52, Version 52.8 (8); SEMCAD X Version 14.6.10 (7373)

Pin=250mW/Area Scan (61x61x1): Interpolated grid: dx=1.500 mm, dy=1.500 mm
Maximum value of SAR (interpolated) = 14.4 W/kg

Pin=250mW/Zoom Scan (5x5x7)/Cube 0: Measurement grid: dx=8mm, dy=8mm, dz=5mm
Reference Value = 105.1 V/m; Power Drift = -0.02 dB
Peak SAR (extrapolated) = 16.8 W/kg
SAR(1 g) = 9.34 W/kg; SAR(10 g) = 5.04 W/kg
Maximum value of SAR (measured) = 14.1 W/kg

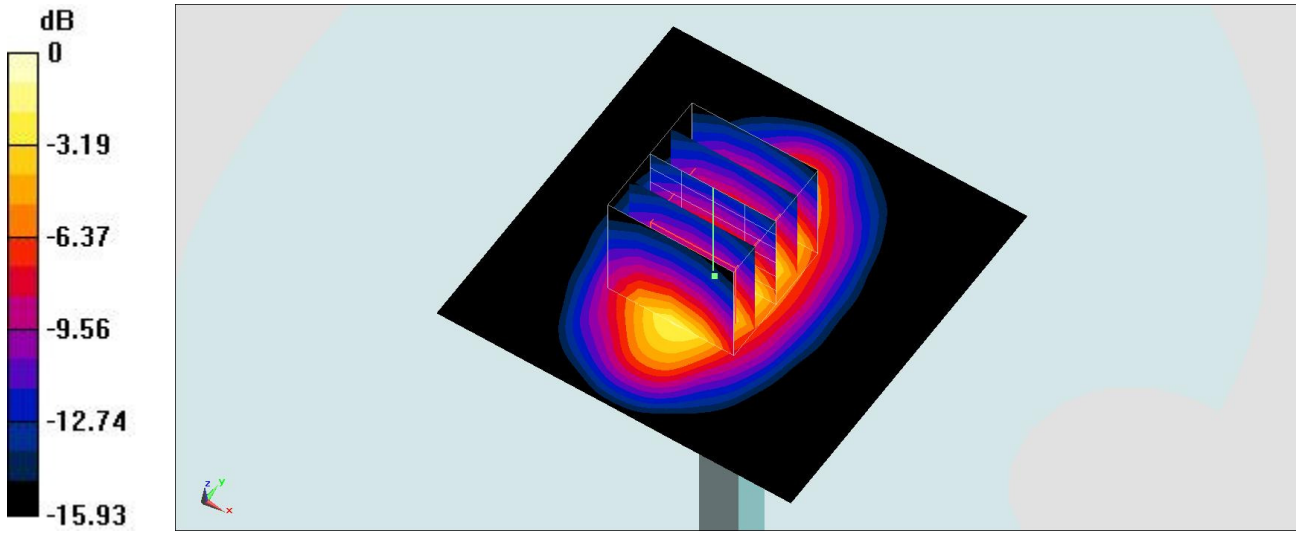

0 dB = 14.1 W/kg = 11.49 dBW/kg

System Check_Body_1750MHz

DUT: D1750V2-1068

Communication System: CW; Frequency: 1750 MHz;Duty Cycle: 1:1
Medium: MSL_1750_170228 Medium parameters used: f = 1750 MHz; σ = 1.452 S/m; ε_r = 53.55; ρ = 1000 kg/m^3
Ambient Temperature：23.6 ℃； Liquid Temperature：22.6 ℃

DASY5 Configuration
- Probe: EX3DV4 - SN3955; ConvF(8.31, 8.31, 8.31); Calibrated: 2016/11/24;
- Sensor-Surface: 1.4mm (Mechanical Surface Detection)
- Electronics: DAE4 Sn1399; Calibrated: 2016/11/17
- Phantom: SAM_RIGHT; Type: QD000P40CD; Serial: 1719
- Measurement SW: DASY52, Version 52.8 (8); SEMCAD X Version 14.6.10 (7373)

Pin=250mW/Area Scan (61x61x1): Interpolated grid: dx=1.500 mm, dy=1.500 mm
Maximum value of SAR (interpolated) = 13.9 W/kg

Pin=250mW/Zoom Scan (5x5x7)/Cube 0: Measurement grid: dx=8mm, dy=8mm, dz=5mm
Reference Value = 95.03 V/m; Power Drift = -0.12 dB
Peak SAR (extrapolated) = 14.9 W/kg
SAR(1 g) = 8.85 W/kg; SAR(10 g) = 4.9 W/kg
Maximum value of SAR (measured) = 12.4 W/kg

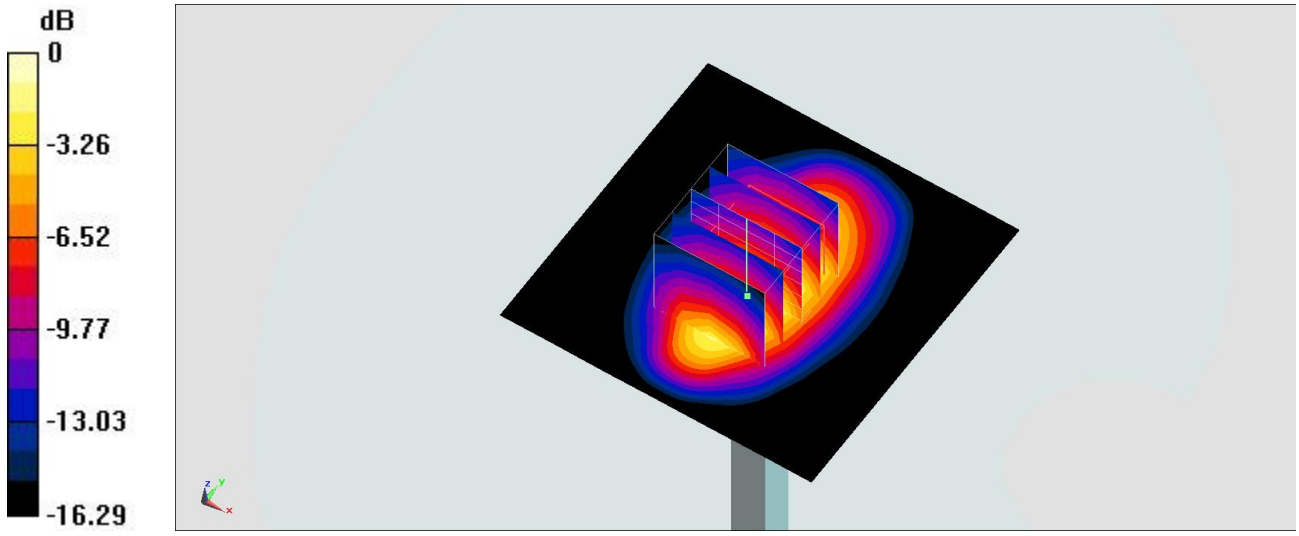

0 dB = 12.4 W/kg = 10.93 dBW/kg

System Check_Body_1750MHz

DUT: D1750V2-1068

Communication System: CW; Frequency: 1750 MHz;Duty Cycle: 1:1
Medium: MSL_1750_170306 Medium parameters used: f = 1750 MHz; σ = 1.503 S/m; ε_r = 55.178; ρ = 1000 kg/m^3
Ambient Temperature：23.7 ℃； Liquid Temperature：22.7 ℃

DASY5 Configuration
- Probe: EX3DV4 - SN3955; ConvF(8.31, 8.31, 8.31); Calibrated: 2016/11/24;
- Sensor-Surface: 1.4mm (Mechanical Surface Detection)
- Electronics: DAE4 Sn1399; Calibrated: 2016/11/17
- Phantom: SAM_RIGHT; Type: QD000P40CD; Serial: 1719
- Measurement SW: DASY52, Version 52.8 (8); SEMCAD X Version 14.6.10 (7373)

Pin=250mW/Area Scan (61x61x1): Interpolated grid: dx=1.500 mm, dy=1.500 mm
Maximum value of SAR (interpolated) = 14.4 W/kg

Pin=250mW/Zoom Scan (5x5x7)/Cube 0: Measurement grid: dx=8mm, dy=8mm, dz=5mm
Reference Value = 95.03 V/m; Power Drift = -0.13 dB
Peak SAR (extrapolated) = 15.4 W/kg
SAR(1 g) = 9.16 W/kg; SAR(10 g) = 5.07 W/kg
Maximum value of SAR (measured) = 12.8 W/kg

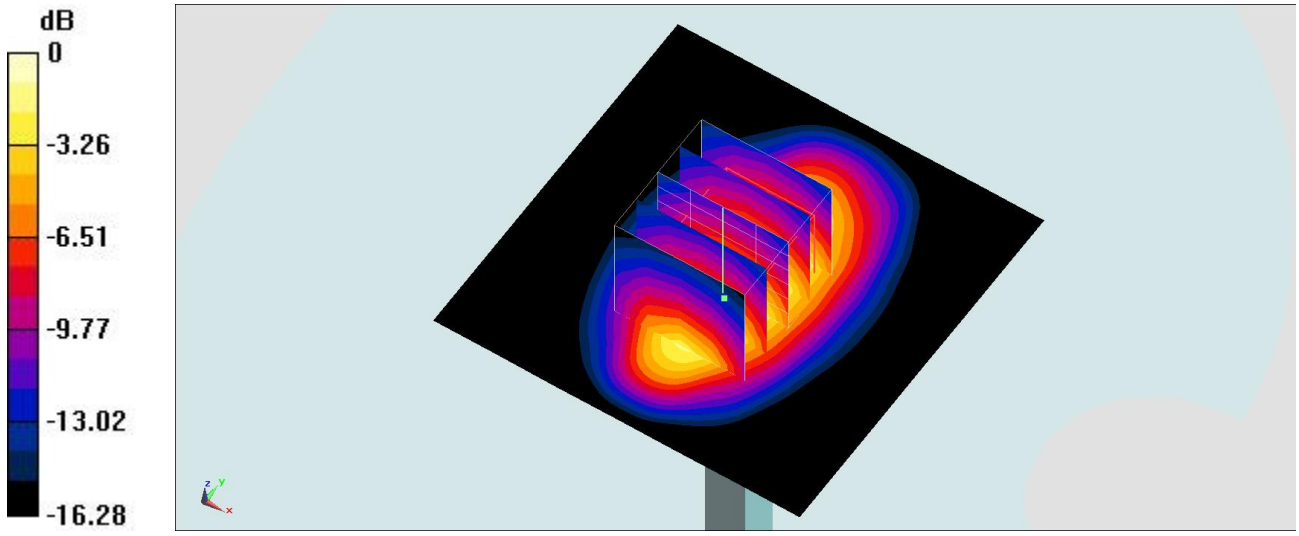

0 dB = 12.8 W/kg = 11.07 dBW/kg

System Check_Head_1900MHz

DUT: D1900V2-5d041

Communication System: CW; Frequency: 1900 MHz;Duty Cycle: 1:1
Medium: HSL_1900_170224 Medium parameters used: f = 1900 MHz; σ = 1.418 S/m; ε_r = 40.27; ρ = 1000 kg/m^3
Ambient Temperature：23.3 ℃； Liquid Temperature：22.3 ℃

DASY5 Configuration
- Probe: EX3DV4 - SN3955; ConvF(8.43, 8.43, 8.43); Calibrated: 2016/11/24;
- Sensor-Surface: 1.4mm (Mechanical Surface Detection)
- Electronics: DAE4 Sn1399; Calibrated: 2016/11/17
- Phantom: SAM LEFT; Type: QD000P40CD; Serial: TP:1718
- Measurement SW: DASY52, Version 52.8 (8); SEMCAD X Version 14.6.10 (7373)

Pin=250mW/Area Scan (61x61x1): Interpolated grid: dx=1.500 mm, dy=1.500 mm
Maximum value of SAR (interpolated) = 15.9 W/kg

Pin=250mW/Zoom Scan (5x5x7)/Cube 0: Measurement grid: dx=8mm, dy=8mm, dz=5mm
Reference Value = 107.0 V/m; Power Drift = 0.11 dB
Peak SAR (extrapolated) = 19.4 W/kg
SAR(1 g) = 10 W/kg; SAR(10 g) = 5.08 W/kg
Maximum value of SAR (measured) = 15.6 W/kg

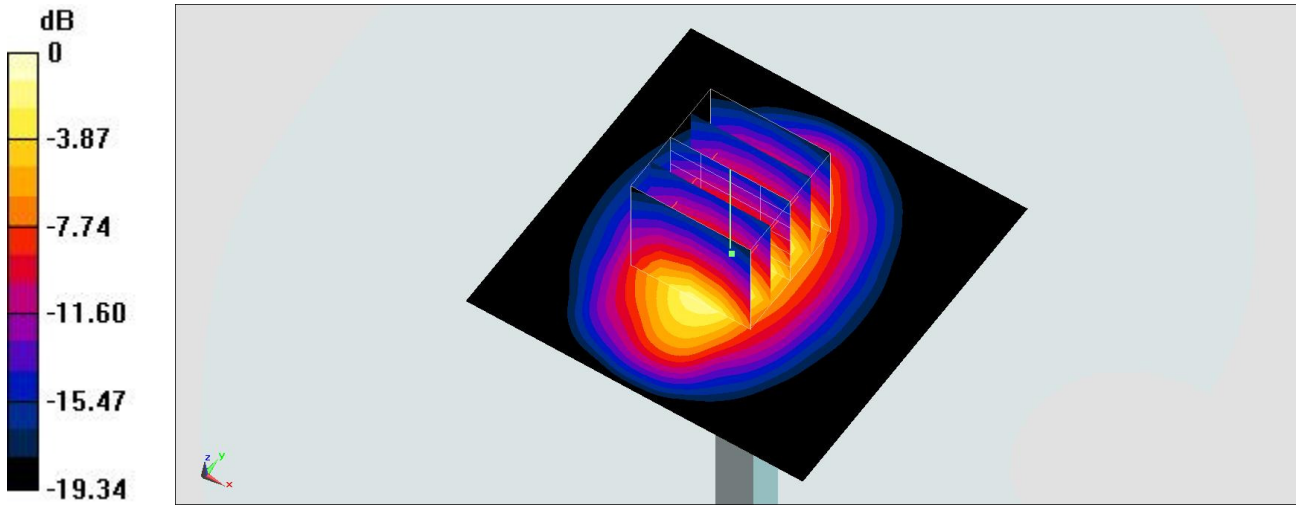

0 dB = 15.6 W/kg = 11.93 dBW/kg

Test Laboratory: Sporton International Inc. SAR/HAC Testing Lab Date: 2017/3/9

System Check_Head_1900MHz

DUT: D1900V2-5d041

Communication System: CW; Frequency: 1900 MHz;Duty Cycle: 1:1
Medium: HSL_1900_170309 Medium parameters used: f = 1900 MHz; σ = 1.388 S/m; ε_r = 39.981; ρ = 1000 kg/m^3
Ambient Temperature：23.6 ℃； Liquid Temperature：22.6 ℃

DASY5 Configuration:
- Probe: EX3DV4 - SN3578; ConvF(7.99, 7.99, 7.99); Calibrated: 2016/5/11;
- Sensor-Surface: 1.4mm (Mechanical Surface Detection)
- Electronics: DAE4 Sn914; Calibrated: 2017/1/6
- Phantom: SAM_Right; Type: SM000T01DA; Serial: TP:1303
- Measurement SW: DASY52, Version 52.8 (8);SEMCAD X Version 14.6.10 (7373)

Pin=250mW/Area Scan (61x61x1): Interpolated grid: dx=1.500 mm, dy=1.500 mm
Maximum value of SAR (interpolated) = 14.8 W/kg

Pin=250mW/Zoom Scan (5x5x7)/Cube 0: Measurement grid: dx=8mm, dy=8mm, dz=5mm
Reference Value = 106.4 V/m; Power Drift = 0.06 dB
Peak SAR (extrapolated) = 17.9 W/kg
SAR(1 g) = 9.69 W/kg; SAR(10 g) = 5.03 W/kg
Maximum value of SAR (measured) = 15.1 W/kg

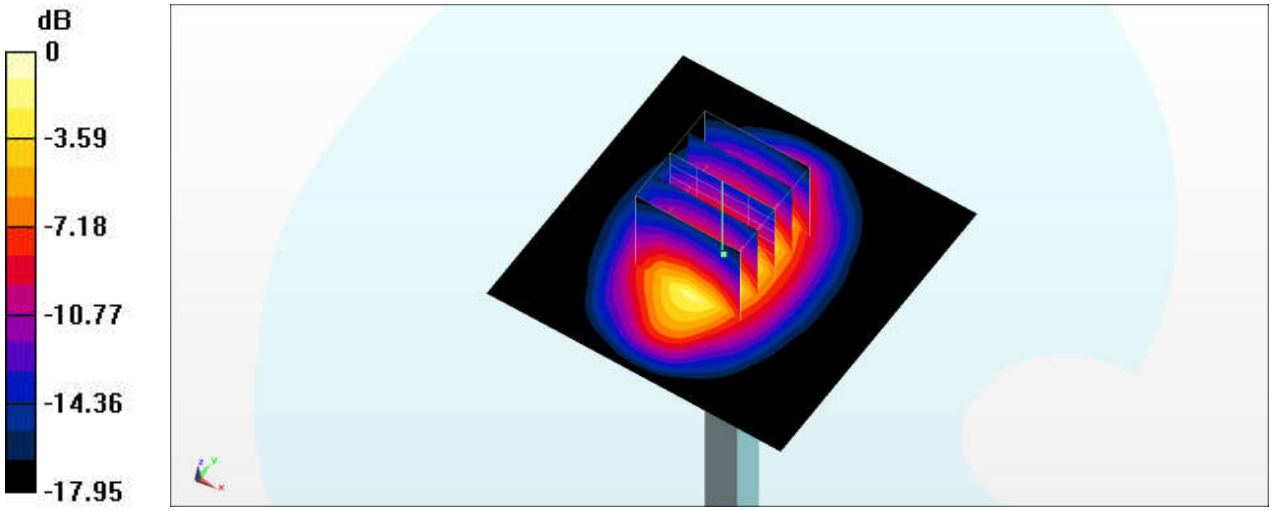

0 dB = 15.1 W/kg = 11.79 dBW/kg

System Check_Body_1900MHz

DUT: D1900V2-5d041

Communication System: CW; Frequency: 1900 MHz;Duty Cycle: 1:1
Medium: MSL_1900_170226 Medium parameters used: f = 1900 MHz; σ = 1.572 S/m; ε_r = 55.371; ρ = 1000 kg/m^3
Ambient Temperature：23.4 ℃; Liquid Temperature：22.4 ℃

DASY5 Configuration
- Probe: EX3DV4 - SN3925; ConvF(8, 8, 8); Calibrated: 2016/5/26;
- Sensor-Surface: 1.4mm (Mechanical Surface Detection)
- Electronics: DAE3 Sn495; Calibrated: 2016/5/27
- Phantom: SAM_Right; Type: QD000P40CD; Serial: S/N:1801
- Measurement SW: DASY52, Version 52.8 (8); SEMCAD X Version 14.6.10 (7373)

Pin=250mW/Area Scan (61x61x1): Interpolated grid: dx=1.500 mm, dy=1.500 mm
Maximum value of SAR (interpolated) = 15.9 W/kg

Pin=250mW/Zoom Scan (5x5x7)/Cube 0: Measurement grid: dx=8mm, dy=8mm, dz=5mm
Reference Value = 104.5 V/m; Power Drift = -0.09 dB
Peak SAR (extrapolated) = 18.7 W/kg
SAR(1 g) = 10.3 W/kg; SAR(10 g) = 5.37 W/kg
Maximum value of SAR (measured) = 15.6 W/kg

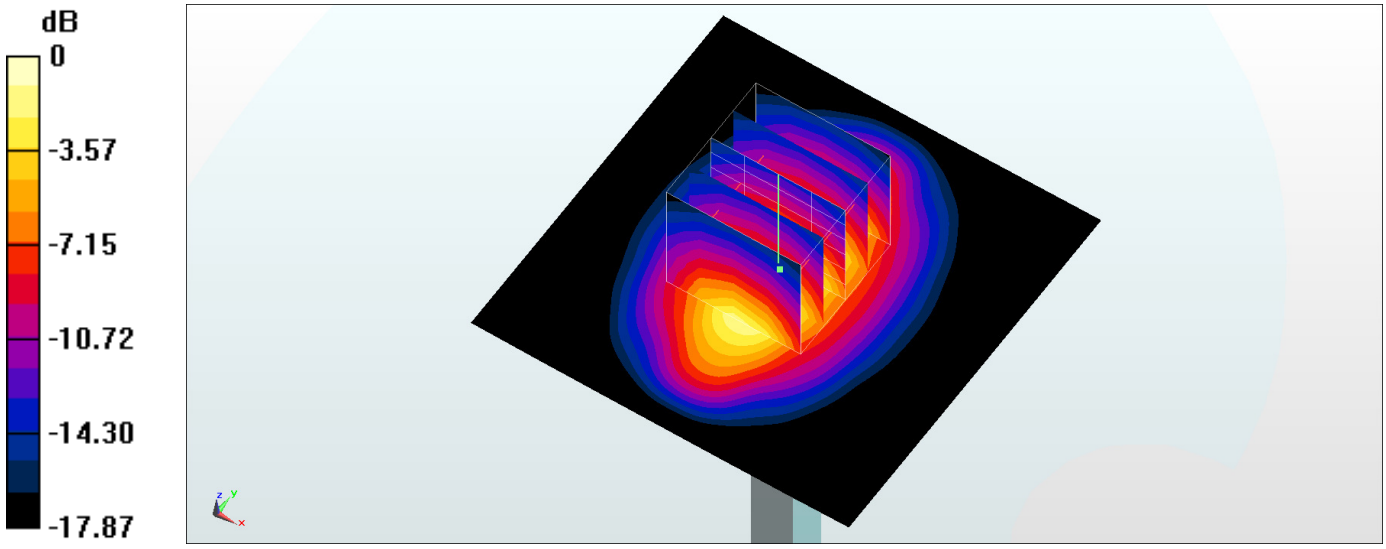

0 dB = 15.6 W/kg = 11.93 dBW/kg

System Check_Body_1900MHz

DUT: D1900V2-5d041

Communication System: CW; Frequency: 1900 MHz;Duty Cycle: 1:1
Medium: MSL_1900_170227 Medium parameters used: f = 1900 MHz; σ = 1.532 S/m; ε_r = 51.624; ρ = 1000 kg/m^3
Ambient Temperature：23.6 ℃； Liquid Temperature：22.6 ℃

DASY5 Configuration
- Probe: EX3DV4 - SN3955; ConvF(8, 8, 8); Calibrated: 2016/11/24;
- Sensor-Surface: 1.4mm (Mechanical Surface Detection)
- Electronics: DAE4 Sn1399; Calibrated: 2016/11/17
- Phantom: SAM_RIGHT; Type: QD000P40CD; Serial: 1719
- Measurement SW: DASY52, Version 52.8 (8); SEMCAD X Version 14.6.10 (7373)

Pin=250mW/Area Scan (61x61x1): Interpolated grid: dx=1.500 mm, dy=1.500 mm
Maximum value of SAR (interpolated) = 15.7 W/kg

Pin=250mW/Zoom Scan (5x5x7)/Cube 0: Measurement grid: dx=8mm, dy=8mm, dz=5mm
Reference Value = 104.2 V/m; Power Drift = -0.08 dB
Peak SAR (extrapolated) = 18.4 W/kg
SAR(1 g) = 10.3 W/kg; SAR(10 g) = 5.38 W/kg
Maximum value of SAR (measured) = 15.5 W/kg

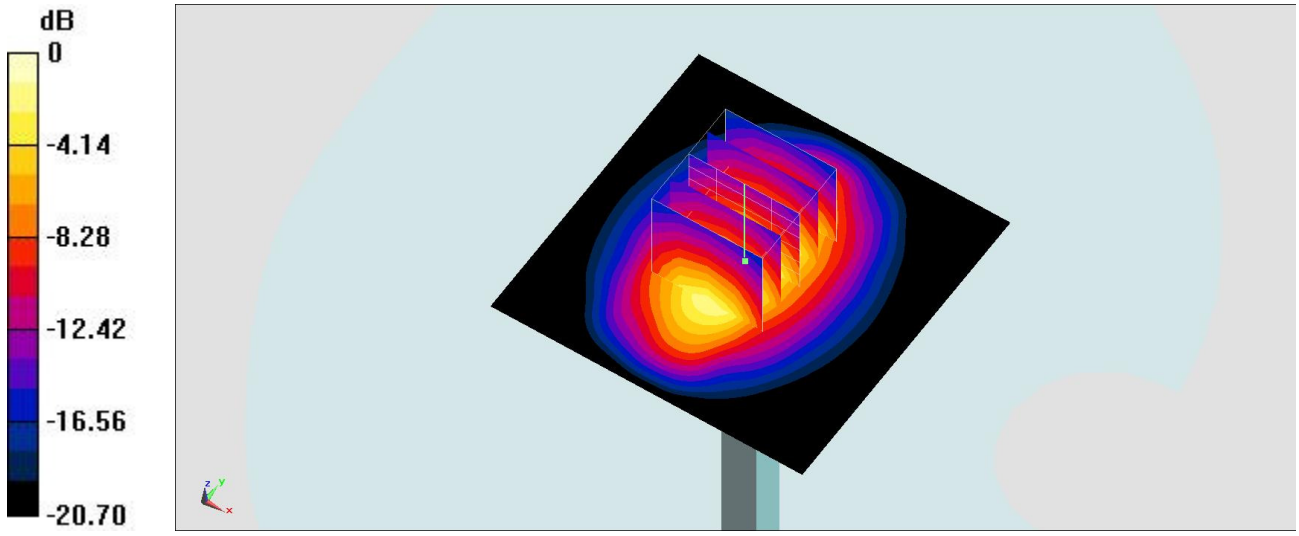

0 dB = 15.5 W/kg = 11.90 dBW/kg

Test Laboratory: Sporton International Inc. SAR/HAC Testing Lab Date: 2017/3/5

System Check_Body_1900MHz

DUT: D1900V2-5d041

Communication System: CW; Frequency: 1900 MHz;Duty Cycle: 1:1
Medium: MSL_1900_170305 Medium parameters used: f = 1900 MHz; σ = 1.519 S/m; ε_r = 52.969; ρ = 1000 kg/m^3
Ambient Temperature：23.7 ℃； Liquid Temperature：22.7 ℃

DASY5 Configuration
- Probe: EX3DV4 - SN3955; ConvF(8, 8, 8); Calibrated: 2016/11/24;
- Sensor-Surface: 1.4mm (Mechanical Surface Detection)
- Electronics: DAE4 Sn1399; Calibrated: 2016/11/17
- Phantom: SAM_RIGHT; Type: QD000P40CD; Serial: 1719
- Measurement SW: DASY52, Version 52.8 (8); SEMCAD X Version 14.6.10 (7373)

Pin=250mW/Area Scan (61x61x1): Interpolated grid: dx=1.500 mm, dy=1.500 mm
Maximum value of SAR (interpolated) = 14.7 W/kg

Pin=250mW/Zoom Scan (5x5x7)/Cube 0: Measurement grid: dx=8mm, dy=8mm, dz=5mm
Reference Value = 101.5 V/m; Power Drift = -0.03 dB
Peak SAR (extrapolated) = 17.4 W/kg
SAR(1 g) = 9.53 W/kg; SAR(10 g) = 4.95 W/kg
Maximum value of SAR (measured) = 14.7 W/kg

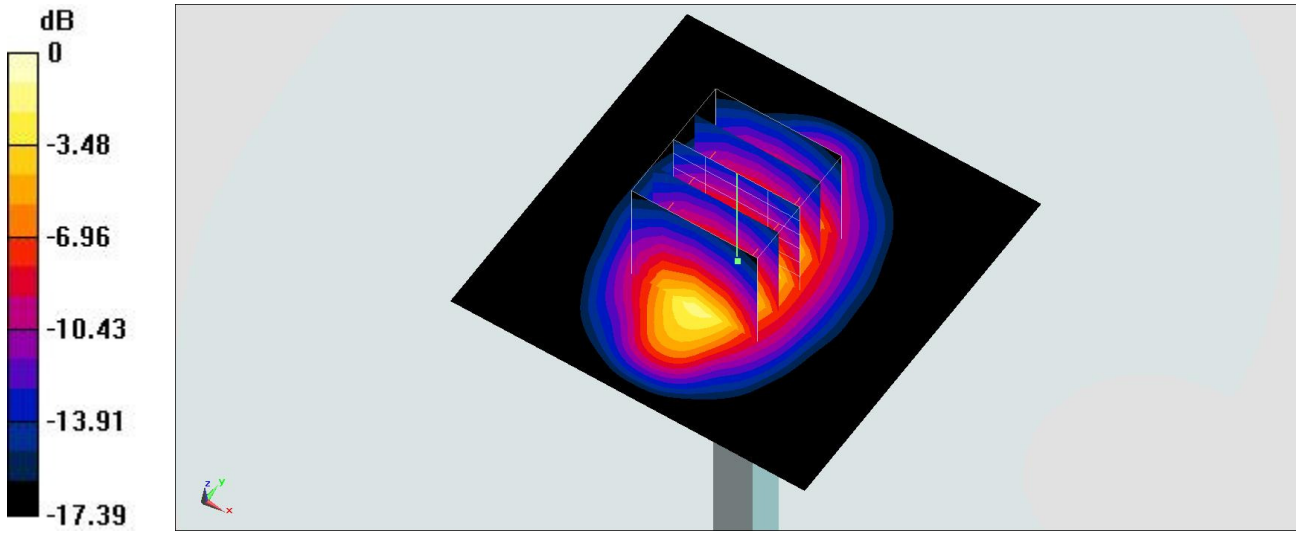

0 dB = 14.7 W/kg = 11.67 dBW/kg

Test Laboratory: Sporton International Inc. SAR/HAC Testing Lab Date: 2017/3/8

System Check_Head_2300MHz

DUT: D2300V2-1006

Communication System: CW ; Frequency: 2300 MHz;Duty Cycle: 1:1
Medium: HSL_2300_170308 Medium parameters used: f = 2300 MHz; σ = 1.646 S/m; ε_r = 41.078; ρ = 1000 kg/m^3
Ambient Temperature：23.1 ℃; Liquid Temperature：22.1 ℃

DASY5 Configuration:
- Probe: EX3DV4 - SN3578; ConvF(7.77, 7.77, 7.77); Calibrated: 2016/5/11;
- Sensor-Surface: 1.4mm (Mechanical Surface Detection)
- Electronics: DAE4 Sn914; Calibrated: 2017/1/6
- Phantom: SAM_Right; Type: SM000T01DA; Serial: TP:1303
- Measurement SW: DASY52, Version 52.8 (8);SEMCAD X Version 14.6.10 (7373)

Pin=250mW/Area Scan (81x81x1): Interpolated grid: dx=1.200 mm, dy=1.200 mm
Maximum value of SAR (interpolated) = 19.0 W/kg

Pin=250mW/Zoom Scan (7x7x7)/Cube 0: Measurement grid: dx=5mm, dy=5mm, dz=5mm
Reference Value = 108.8 V/m; Power Drift = -0.16 dB
Peak SAR (extrapolated) = 23.4 W/kg
SAR(1 g) = 11.5 W/kg; SAR(10 g) = 5.43 W/kg
Maximum value of SAR (measured) = 19.1 W/kg

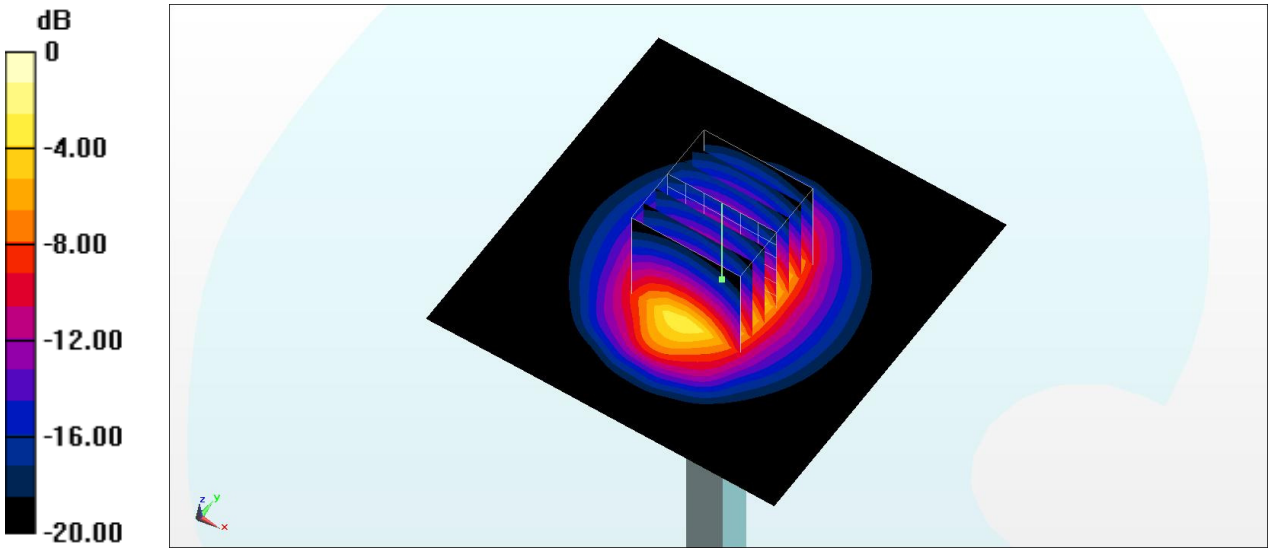

0 dB = 19.1 W/kg = 12.81 dBW/kg

System Check_Body_2300MHz

DUT: D2300V2-1006

Communication System: CW ; Frequency: 2300 MHz;Duty Cycle: 1:1
Medium: MSL_2300_170308 Medium parameters used: f = 2300 MHz; σ = 1.82 S/m; ε_r = 52.941; ρ = 1000 kg/m^3
Ambient Temperature：23.1 ℃; Liquid Temperature：22.1 ℃

DASY5 Configuration
- Probe: EX3DV4 - SN3931; ConvF(7.96, 7.96, 7.96); Calibrated: 2016/10/3;
- Sensor-Surface: 1.4mm (Mechanical Surface Detection)
- Electronics: DAE3 Sn577; Calibrated: 2016/9/28
- Phantom: SAM LEFT; Type: QD000P40CD; Serial: TP:1718
- Measurement SW: DASY52, Version 52.8 (8); SEMCAD X Version 14.6.10 (7373)

Pin=250mW/Area Scan (71x71x1): Interpolated grid: dx=1.200 mm, dy=1.200 mm
Maximum value of SAR (interpolated) = 20.6 W/kg

Pin=250mW/Zoom Scan (7x7x7)/Cube 0: Measurement grid: dx=5mm, dy=5mm, dz=5mm
Reference Value = 109.7 V/m; Power Drift = -0.04 dB
Peak SAR (extrapolated) = 24.5 W/kg
SAR(1 g) = 12.5 W/kg; SAR(10 g) = 6.06 W/kg
Maximum value of SAR (measured) = 20.1 W/kg

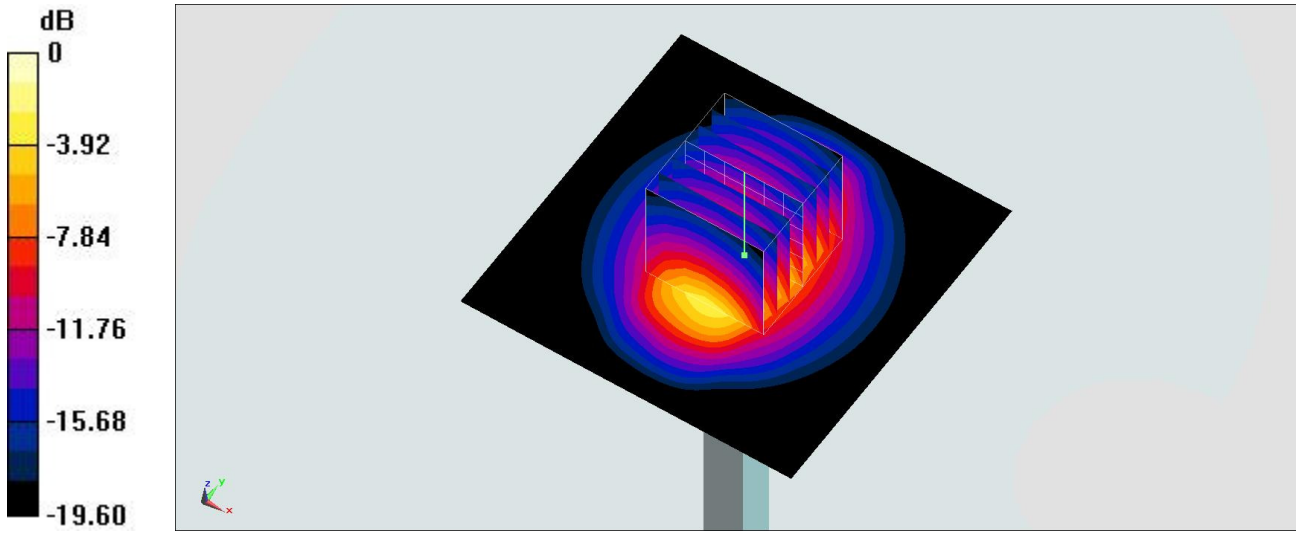

0 dB = 20.1 W/kg = 13.03 dBW/kg

Test Laboratory: Sporton International Inc. SAR/HAC Testing Lab Date: 2017/3/8

System Check_Head_2450MHz

DUT: D2450V2-926

Communication System: CW; Frequency: 2450 MHz;Duty Cycle: 1:1
Medium: HSL_2450_170308 Medium parameters used: f = 2450 MHz; σ = 1.82 mho/m; ε_r = 40.5; ρ = 1000 kg/m^3
Ambient Temperature：23.3 ℃; Liquid Temperature：22.3 ℃

DASY4 Configuration:
- Probe: EX3DV4 - SN3955; ConvF(7.56, 7.56, 7.56); Calibrated: 2016/11/24
- Sensor-Surface: 1.4mm (Mechanical Surface Detection)
- Electronics: DAE4 Sn1399; Calibrated: 2016/11/17
- Phantom: SAM_Right; Type: QD000P40CD; Serial: TP:1815
- ;Postprocessing SW: SEMCAD, V1.8 Build 159

Pin=250mW/Area Scan (71x71x1): Measurement grid: dx=12mm, dy=12mm
Maximum value of SAR (interpolated) = 23.7 mW/g

Pin=250mW/Zoom Scan (7x7x7)/Cube 0: Measurement grid: dx=5mm, dy=5mm, dz=5mm
Reference Value = 116.9 V/m; Power Drift = -0.117 dB
Peak SAR (extrapolated) = 28.3 W/kg
SAR(1 g) = 13.3 mW/g; SAR(10 g) = 6.06 mW/g
Maximum value of SAR (measured) = 22.5 mW/g

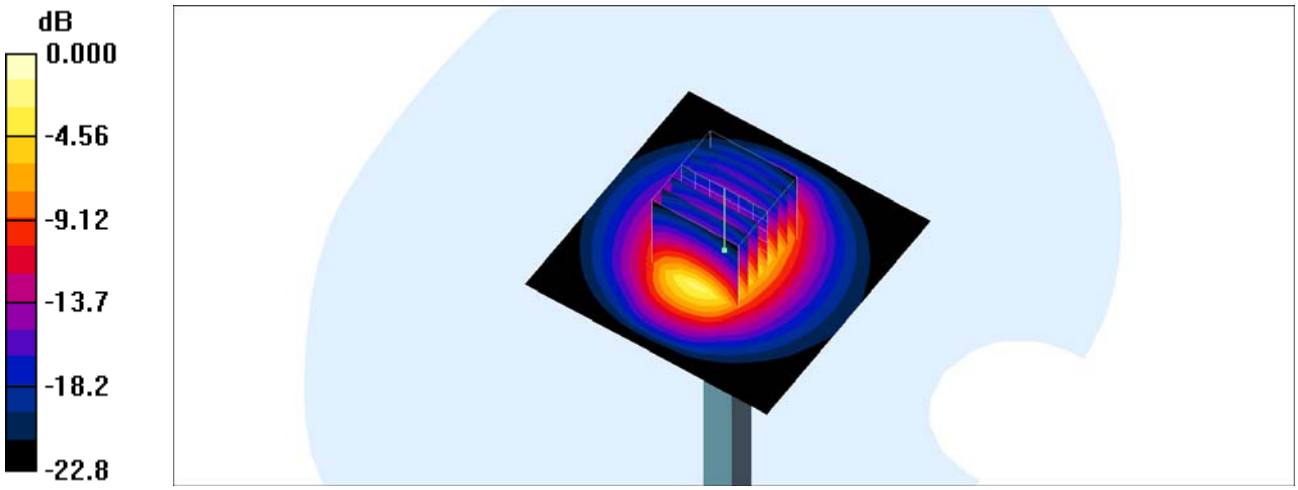

0 dB = 22.5mW/g

Test Laboratory: Sporton International Inc. SAR/HAC Testing Lab Date: 2017/3/9

System Check_Body_2450MHz

DUT: D2450V2-926

Communication System: CW; Frequency: 2450 MHz;Duty Cycle: 1:1
Medium: MSL_2450_170309 Medium parameters used: f = 2450 MHz; σ = 1.98 mho/m; ε_r = 54.1; ρ = 1000 kg/m^3
Ambient Temperature：23.2 ℃； Liquid Temperature：22.2 ℃

DASY4 Configuration:
- Probe: EX3DV4 - SN3955; ConvF(7.65, 7.65, 7.65); Calibrated: 2016/11/24
- Sensor-Surface: 1.4mm (Mechanical Surface Detection)
- Electronics: DAE4 Sn1399; Calibrated: 2016/11/17
- Phantom: SAM_Right; Type: QD000P40CD; Serial: TP:1815
- ;Postprocessing SW: SEMCAD, V1.8 Build 159

Pin=250mW/Area Scan (61x61x1): Measurement grid: dx=12mm, dy=12mm
Maximum value of SAR (interpolated) = 21.6 mW/g

Pin=250mW/Zoom Scan (7x7x7)/Cube 0: Measurement grid: dx=5mm, dy=5mm, dz=5mm
Reference Value = 107.2 V/m; Power Drift = 0.058 dB
Peak SAR (extrapolated) = 26.3 W/kg
SAR(1 g) = 12.8 mW/g; SAR(10 g) = 5.98 mW/g
Maximum value of SAR (measured) = 21.4 mW/g

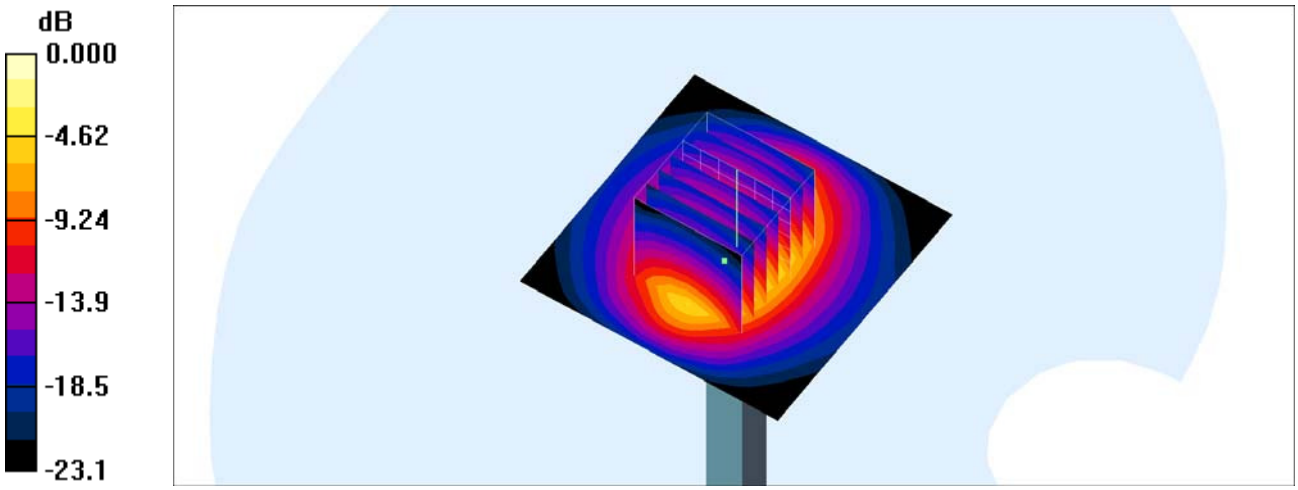

0 dB = 21.4mW/g

System Check_Head_2600MHz

DUT: D2600V2-1008

Communication System: CW ; Frequency: 2600 MHz;Duty Cycle: 1:1
Medium: HSL_2600_170218 Medium parameters used: f = 2600 MHz; σ = 1.945 S/m; ε_r = 38.628; ρ = 1000 kg/m^3
Ambient Temperature：23.8 ℃； Liquid Temperature：22.8 ℃

DASY5 Configuration
- Probe: EX3DV4 - SN3955; ConvF(7.28, 7.28, 7.28); Calibrated: 2016/11/24;
- Sensor-Surface: 1.4mm (Mechanical Surface Detection)
- Electronics: DAE4 Sn1399; Calibrated: 2016/11/17
- Phantom: SAM_RIGHT; Type: QD000P40CD; Serial: 1719
- Measurement SW: DASY52, Version 52.8 (8); SEMCAD X Version 14.6.10 (7373)

Pin=250mW/Area Scan (61x61x1): Interpolated grid: dx=1.200 mm, dy=1.200 mm
Maximum value of SAR (interpolated) = 25.4 W/kg

Pin=250mW/Zoom Scan (7x7x7)/Cube 0: Measurement grid: dx=5mm, dy=5mm, dz=5mm
Reference Value = 115.8 V/m; Power Drift = 0.08 dB
Peak SAR (extrapolated) = 31.6 W/kg
SAR(1 g) = 14.7 W/kg; SAR(10 g) = 6.6 W/kg
Maximum value of SAR (measured) = 25.3 W/kg

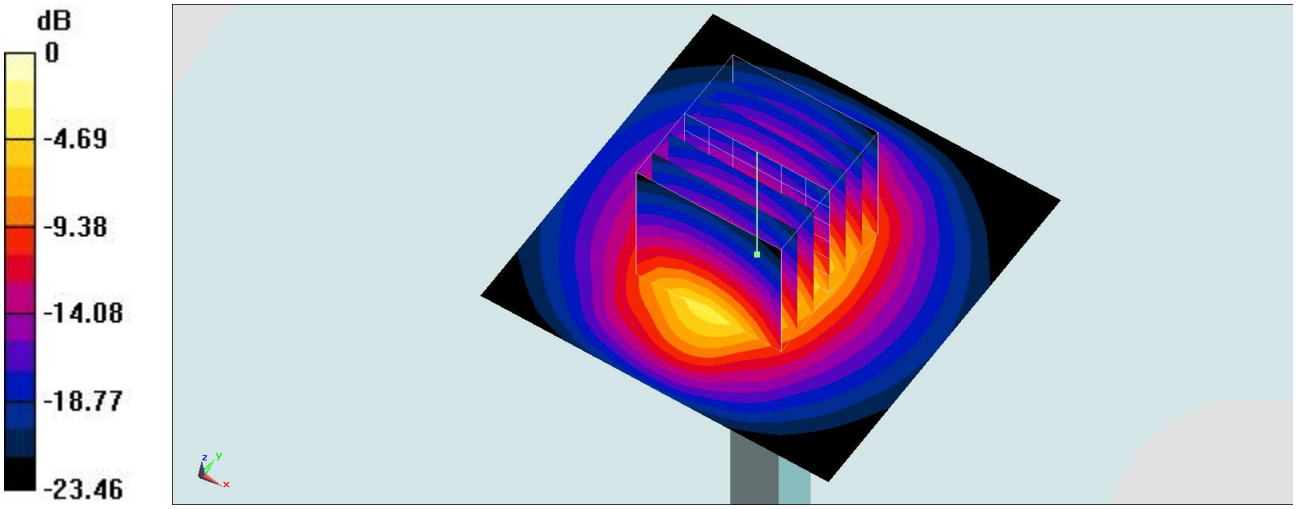

0 dB = 25.3 W/kg = 14.03 dBW/kg

System Check_Head_2600MHz

DUT: D2600V2-1008

Communication System: CW ; Frequency: 2600 MHz;Duty Cycle: 1:1
Medium: HSL_2600_170304 Medium parameters used: f = 2600 MHz; σ = 2.044 S/m; ε_r = 37.752; ρ = 1000 kg/m^3
Ambient Temperature：23.5 ℃; Liquid Temperature：22.5 ℃

DASY5 Configuration:
- Probe: EX3DV4 - SN3925; ConvF(7.28, 7.28, 7.28); Calibrated: 2016/5/26;
- Sensor-Surface: 1.4mm (Mechanical Surface Detection)
- Electronics: DAE3 Sn495; Calibrated: 2016/5/27
- Phantom: SAM-Right; Type: SAM; Serial: 1795
- Measurement SW: DASY52, Version 52.8 (8);SEMCAD X Version 14.6.10 (7331)

Pin=250mW/Area Scan (61x61x1): Interpolated grid: dx=1.200 mm, dy=1.200 mm
Maximum value of SAR (interpolated) = 21.8 W/kg

Pin=250mW/Zoom Scan (7x7x7)/Cube 0: Measurement grid: dx=5mm, dy=5mm, dz=5mm
Reference Value = 105.0 V/m; Power Drift = -0.05 dB
Peak SAR (extrapolated) = 29.1 W/kg
SAR(1 g) = 14 W/kg; SAR(10 g) = 6.24 W/kg
Maximum value of SAR (measured) = 21.7 W/kg

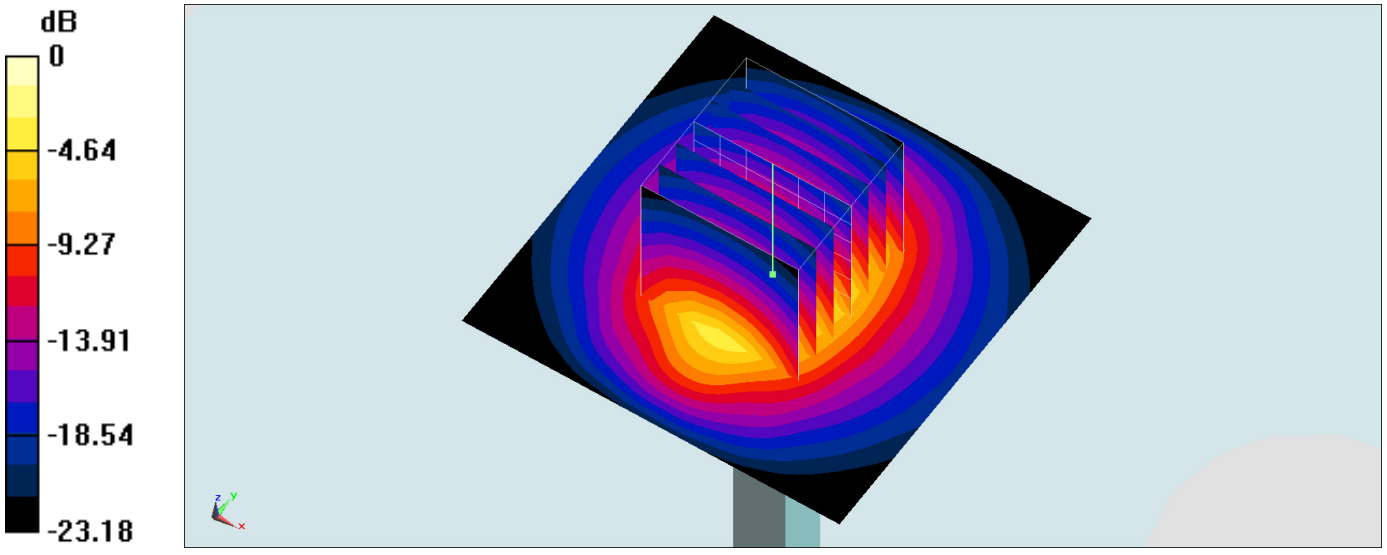

0 dB = 21.7 W/kg = 13.36 dBW/kg

Test Laboratory: Sporton International Inc. SAR/HAC Testing Lab Date: 2017/3/8

System Check_Head_2600MHz

DUT: D2600V2-1008

Communication System: CW ; Frequency: 2600 MHz;Duty Cycle: 1:1
Medium: HSL_2600_170308 Medium parameters used: f = 2600 MHz; σ = 1.994 S/m; ε_r = 39.923; ρ = 1000 kg/m^3
Ambient Temperature：23.1 ℃; Liquid Temperature：22.1 ℃

DASY5 Configuration:
- Probe: EX3DV4 - SN3578; ConvF(7.21, 7.21, 7.21); Calibrated: 2016/5/11;
- Sensor-Surface: 1.4mm (Mechanical Surface Detection)
- Electronics: DAE4 Sn914; Calibrated: 2017/1/6
- Phantom: SAM_Right; Type: SM000T01DA; Serial: TP:1303
- Measurement SW: DASY52, Version 52.8 (8);SEMCAD X Version 14.6.10 (7373)

Pin=250mW/Area Scan (61x61x1): Interpolated grid: dx=1.200 mm, dy=1.200 mm
Maximum value of SAR (interpolated) = 22.7 W/kg

Pin=250mW/Zoom Scan (7x7x7)/Cube 0: Measurement grid: dx=5mm, dy=5mm, dz=5mm
Reference Value = 109.3 V/m; Power Drift = -0.09 dB
Peak SAR (extrapolated) = 27.2 W/kg
SAR(1 g) = 14 W/kg; SAR(10 g) = 6.63 W/kg
Maximum value of SAR (measured) = 22.6 W/kg

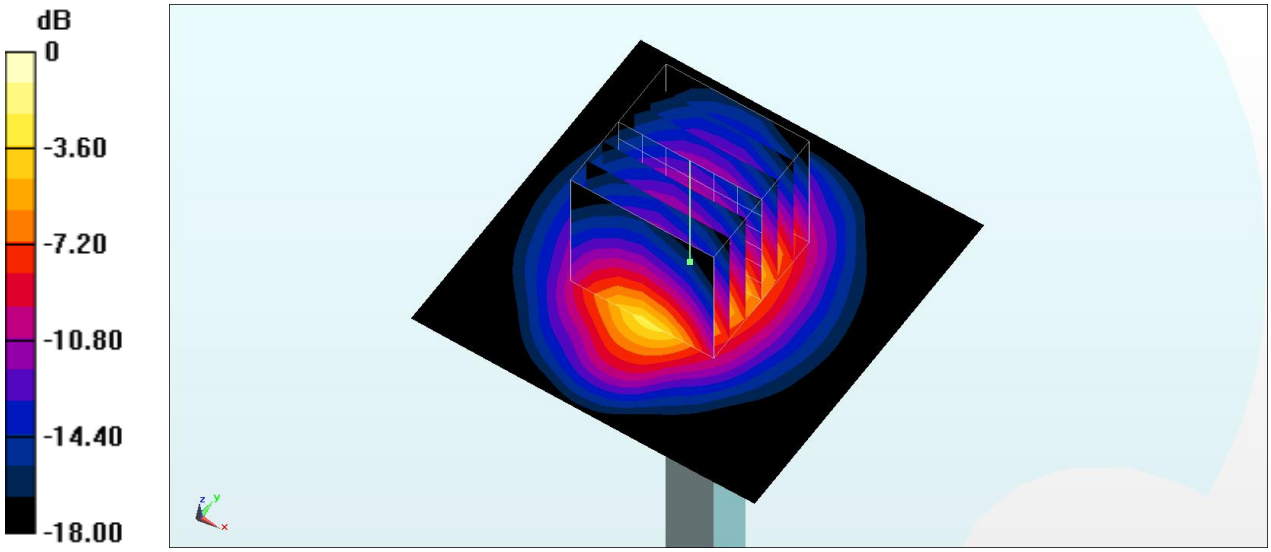

0 dB = 22.6 W/kg = 13.54 dBW/kg

System Check_Body_2600MHz

DUT: D2600V2-1008

Communication System: CW; Frequency: 2600 MHz;Duty Cycle: 1:1
Medium: MSL_2600_170307 Medium parameters used: f = 2600 MHz; σ = 2.233 S/m; ε_r = 51.922; ρ = 1000 kg/m^3
Ambient Temperature：23.1 ℃； Liquid Temperature：22.1 ℃

DASY5 Configuration
- Probe: EX3DV4 - SN3955; ConvF(7.42, 7.42, 7.42); Calibrated: 2016/11/24;
- Sensor-Surface: 1.4mm (Mechanical Surface Detection)
- Electronics: DAE4 Sn1399; Calibrated: 2016/11/17
- Phantom: SAM LEFT; Type: QD000P40CD; Serial: TP:1718
- Measurement SW: DASY52, Version 52.8 (8); SEMCAD X Version 14.6.10 (7373)

Pin=250mW/Area Scan (61x61x1): Interpolated grid: dx=1.200 mm, dy=1.200 mm
Maximum value of SAR (interpolated) = 25.0 W/kg

Pin=250mW/Zoom Scan (7x7x7)/Cube 0: Measurement grid: dx=5mm, dy=5mm, dz=5mm
Reference Value = 109.8 V/m; Power Drift = -0.12 dB
Peak SAR (extrapolated) = 31.2 W/kg
SAR(1 g) = 14.6 W/kg; SAR(10 g) = 6.51 W/kg
Maximum value of SAR (measured) = 25.0 W/kg

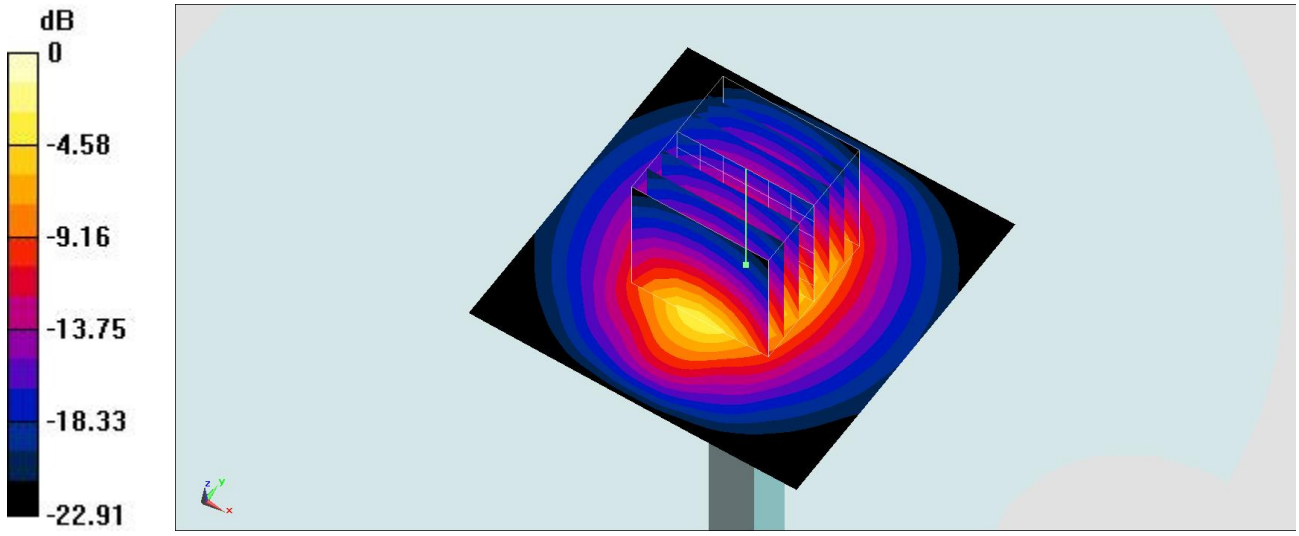

0 dB = 25.0 W/kg = 13.98 dBW/kg

System Check_Body_2600MHz

DUT: D2600V2-1008

Communication System: CW ; Frequency: 2600 MHz;Duty Cycle: 1:1
Medium: MSL_2600_170308 Medium parameters used: f = 2600 MHz; σ = 2.232 S/m; ε_r = 52.761; ρ = 1000 kg/m^3
Ambient Temperature：23.1 ℃； Liquid Temperature：22.1 ℃

DASY5 Configuration
- Probe: EX3DV4 - SN3931; ConvF(7.46, 7.46, 7.46); Calibrated: 2016/10/3;
- Sensor-Surface: 1.4mm (Mechanical Surface Detection)
- Electronics: DAE3 Sn577; Calibrated: 2016/9/28
- Phantom: SAM LEFT; Type: QD000P40CD; Serial: TP:1718
- Measurement SW: DASY52, Version 52.8 (8); SEMCAD X Version 14.6.10 (7373)

Pin=250mW/Area Scan (61x61x1): Interpolated grid: dx=1.200 mm, dy=1.200 mm
Maximum value of SAR (interpolated) = 25.3 W/kg

Pin=250mW/Zoom Scan (7x7x7)/Cube 0: Measurement grid: dx=5mm, dy=5mm, dz=5mm
Reference Value = 105.6 V/m; Power Drift = 0.11 dB
Peak SAR (extrapolated) = 32.6 W/kg
SAR(1 g) = 14.9 W/kg; SAR(10 g) = 6.59 W/kg
Maximum value of SAR (measured) = 25.9 W/kg

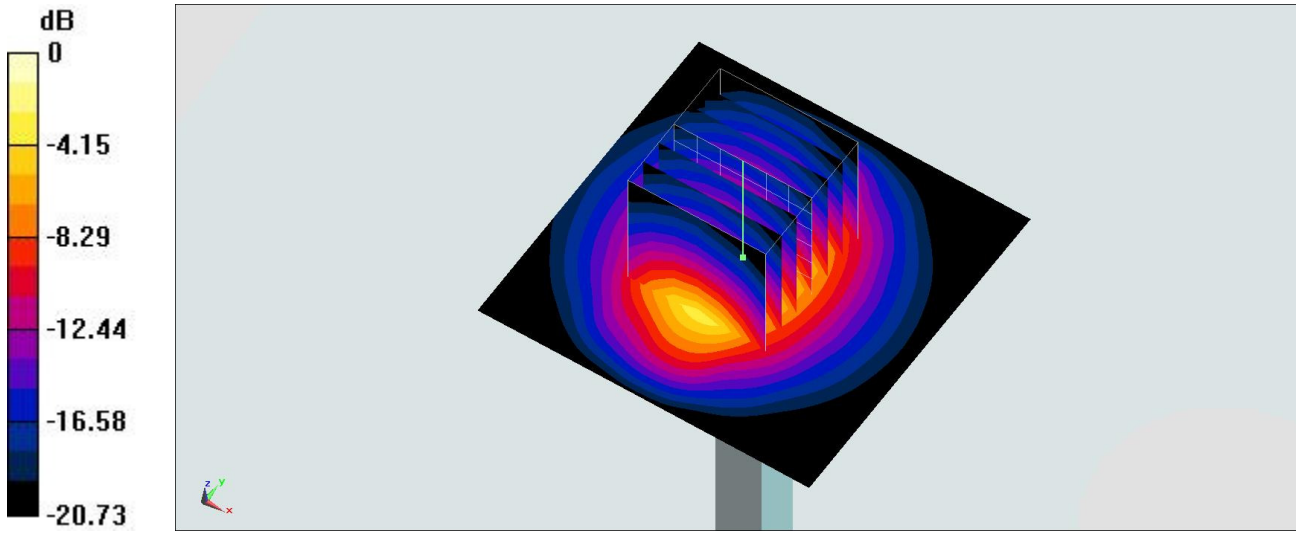

0 dB = 25.9 W/kg = 14.13 dBW/kg

Test Laboratory: Sporton International Inc. SAR/HAC Testing Lab Date: 2017/3/6

System Check_Head_5250MHz

DUT: D5GHzV2-1006

Communication System: CW; Frequency: 5250 MHz;Duty Cycle: 1:1
Medium: HSL_5G_170306 Medium parameters used: f = 5250 MHz; σ = 4.68 mho/m; ε_r = 37.3; ρ = 1000 kg/m^3
Ambient Temperature：23.7 ℃; Liquid Temperature：22.7 ℃

DASY4 Configuration:
- Probe: EX3DV4 - SN3931; ConvF(5.38, 5.38, 5.38); Calibrated: 2016/10/3
- Sensor-Surface: 1.4mm (Mechanical Surface Detection)
- Electronics: DAE3 Sn577; Calibrated: 2016/9/28
- Phantom: SAM_Right; Type: QD000P40CD; Serial: TP:1815
- ;Postprocessing SW: SEMCAD, V1.8 Build 159

Pin=100mW/Area Scan (71x71x1): Measurement grid: dx=10mm, dy=10mm
Maximum value of SAR (interpolated) = 20.8 mW/g

Pin=100mW/Zoom Scan (7x7x7)/Cube 0: Measurement grid: dx=4mm, dy=4mm, dz=1.4mm
Reference Value = 71.2 V/m; Power Drift = 0.115 dB
Peak SAR (extrapolated) = 33.9 W/kg
SAR(1 g) = 7.98 mW/g; SAR(10 g) = 2.24 mW/g
Maximum value of SAR (measured) = 20.5 mW/g

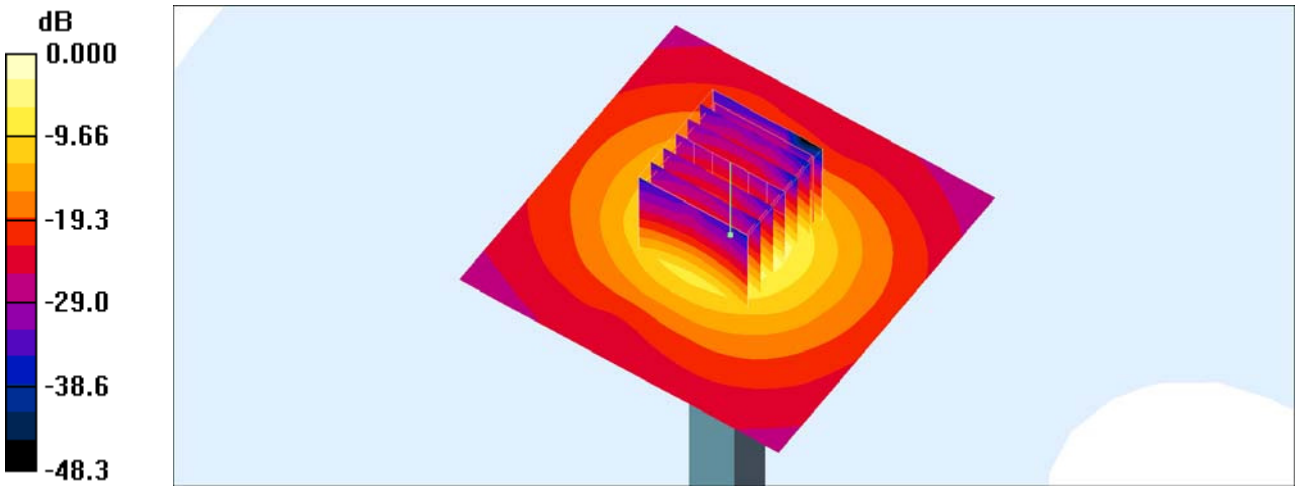

0 dB = 20.5mW/g

System Check_Body_5250MHz

DUT: D5GHzV2-1006

Communication System: CW; Frequency: 5250 MHz;Duty Cycle: 1:1
Medium: MSL_5G_170304 Medium parameters used: f = 5250 MHz; σ = 5.53 mho/m; ε_r = 47.6; ρ = 1000 kg/m^3
Ambient Temperature：23.7 ℃； Liquid Temperature：22.7 ℃

DASY4 Configuration:
- Probe: EX3DV4 - SN3931; ConvF(4.57, 4.57, 4.57); Calibrated: 2016/10/3
- Sensor-Surface: 1.4mm (Mechanical Surface Detection)
- Electronics: DAE3 Sn577; Calibrated: 2016/9/28
- Phantom: SAM_Right; Type: QD000P40CD; Serial: TP:1815
- ;Postprocessing SW: SEMCAD, V1.8 Build 159

Pin=100mW/Area Scan (71x71x1): Measurement grid: dx=10mm, dy=10mm
Maximum value of SAR (interpolated) = 18.9 mW/g

Pin=100mW/Zoom Scan (7x7x7)/Cube 0: Measurement grid: dx=4mm, dy=4mm, dz=1.4mm
Reference Value = 66.7 V/m; Power Drift = 0.006 dB
Peak SAR (extrapolated) = 30.0 W/kg
SAR(1 g) = 7.75 mW/g; SAR(10 g) = 2.16 mW/g
Maximum value of SAR (measured) = 18.7 mW/g

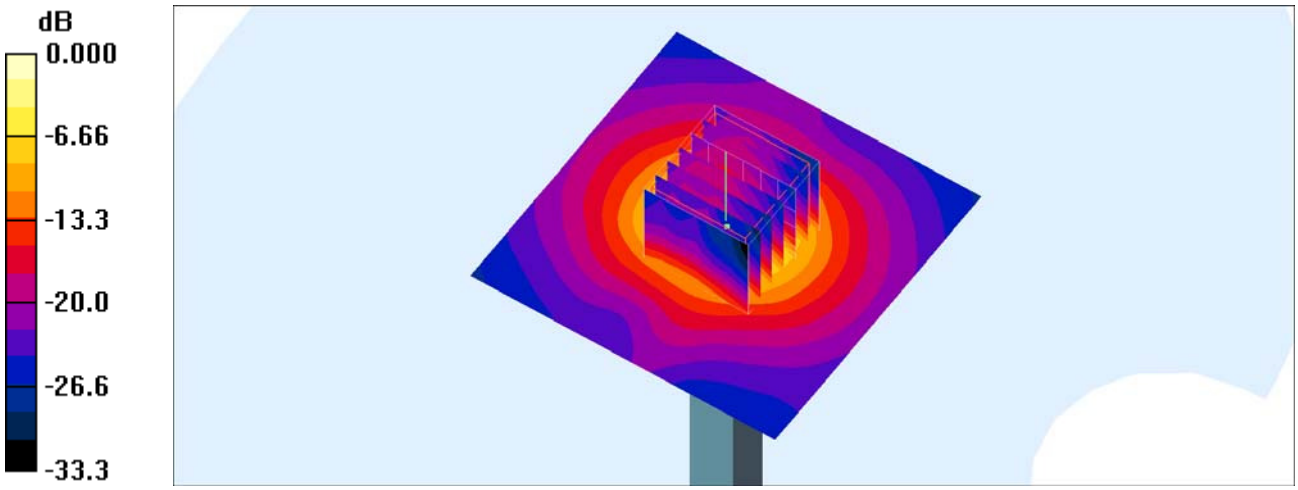

0 dB = 18.7mW/g

Test Laboratory: Sporton International Inc. SAR/HAC Testing Lab Date: 2017/3/8

System Check_Body_5250MHz

DUT: D5GHzV2-1006

Communication System: CW; Frequency: 5250 MHz;Duty Cycle: 1:1
Medium: MSL_5G_170308 Medium parameters used: f = 5250 MHz; σ = 5.5 mho/m; ε_r = 46.8; ρ = 1000 kg/m^3
Ambient Temperature：23.1 ℃； Liquid Temperature：22.1 ℃

DASY4 Configuration:
- Probe: EX3DV4 - SN3955; ConvF(4.51, 4.51, 4.51); Calibrated: 2016/11/24
- Sensor-Surface: 1.4mm (Mechanical Surface Detection)
- Electronics: DAE4 Sn1399; Calibrated: 2016/11/17
- Phantom: SAM_Right; Type: QD000P40CD; Serial: TP:1815
- ;Postprocessing SW: SEMCAD, V1.8 Build 159

Pin=100mW/Area Scan (71x71x1): Measurement grid: dx=10mm, dy=10mm
Maximum value of SAR (interpolated) = 17.0 mW/g

Pin=100mW/Zoom Scan (7x7x7)/Cube 0: Measurement grid: dx=4mm, dy=4mm, dz=1.4mm
Reference Value = 65.4 V/m; Power Drift = 0.122 dB
Peak SAR (extrapolated) = 31.0 W/kg
SAR(1 g) = 7.57 mW/g; SAR(10 g) = 2.02 mW/g
Maximum value of SAR (measured) = 19.3 mW/g

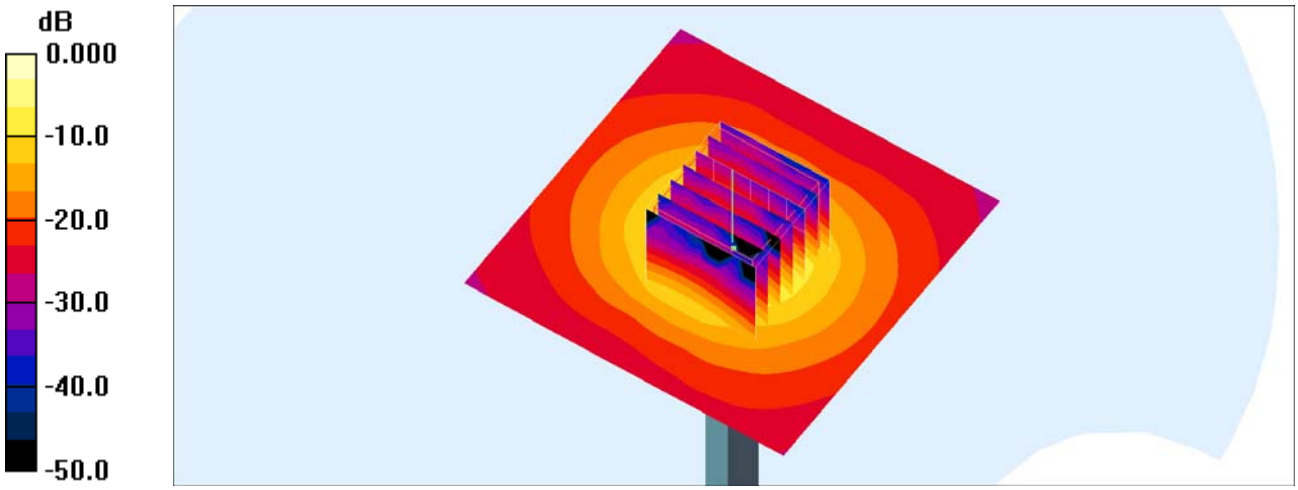

0 dB = 19.3mW/g

Test Laboratory: Sporton International Inc. SAR/HAC Testing Lab Date: 2017/3/6

System Check_Head_5600MHz

DUT: D5GHzV2-1006

Communication System: CW; Frequency: 5600 MHz;Duty Cycle: 1:1
Medium: HSL_5G_170306 Medium parameters used: f = 5600 MHz; σ = 5.03 mho/m; ε_r = 36.8; ρ = 1000 kg/m^3
Ambient Temperature：23.7 ℃; Liquid Temperature：22.7 ℃

DASY4 Configuration:
- Probe: EX3DV4 - SN3931; ConvF(4.68, 4.68, 4.68); Calibrated: 2016/10/3
- Sensor-Surface: 1.4mm (Mechanical Surface Detection)
- Electronics: DAE3 Sn577; Calibrated: 2016/9/28
- Phantom: SAM_Right; Type: QD000P40CD; Serial: TP:1815
- ;Postprocessing SW: SEMCAD, V1.8 Build 159

Pin=100mW/Area Scan (71x71x1): Measurement grid: dx=10mm, dy=10mm
Maximum value of SAR (interpolated) = 22.5 mW/g

Pin=100mW/Zoom Scan (7x7x7)/Cube 0: Measurement grid: dx=4mm, dy=4mm, dz=1.4mm
Reference Value = 73.4 V/m; Power Drift = 0.028 dB
Peak SAR (extrapolated) = 37.4 W/kg
SAR(1 g) = 8.41 mW/g; SAR(10 g) = 2.37 mW/g
Maximum value of SAR (measured) = 22.1 mW/g

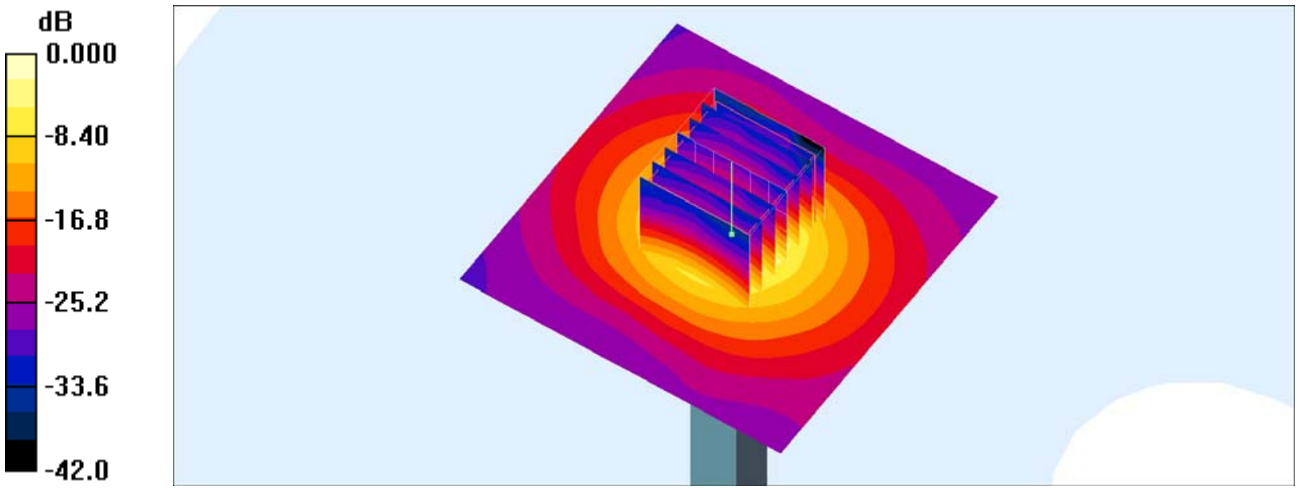

0 dB = 22.1mW/g

Test Laboratory: Sporton International Inc. SAR/HAC Testing Lab Date: 2017/3/4

System Check_Body_5600MHz

DUT: D5GHzV2-1006

Communication System: CW; Frequency: 5600 MHz;Duty Cycle: 1:1
Medium: MSL_5G_170304 Medium parameters used: f = 5600 MHz; σ = 6 mho/m; ε_r = 47; ρ = 1000 kg/m^3
Ambient Temperature：23.7 ℃; Liquid Temperature：22.7 ℃

DASY4 Configuration:
- Probe: EX3DV4 - SN3931; ConvF(3.71, 3.71, 3.71); Calibrated: 2016/10/3
- Sensor-Surface: 1.4mm (Mechanical Surface Detection)
- Electronics: DAE3 Sn577; Calibrated: 2016/9/28
- Phantom: SAM_Right; Type: QD000P40CD; Serial: TP:1815
- ;Postprocessing SW: SEMCAD, V1.8 Build 159

Pin=100mW/Area Scan (71x71x1): Measurement grid: dx=10mm, dy=10mm
Maximum value of SAR (interpolated) = 21.8 mW/g

Pin=100mW/Zoom Scan (7x7x7)/Cube 0: Measurement grid: dx=4mm, dy=4mm, dz=1.4mm
Reference Value = 66.8 V/m; Power Drift = -0.062 dB
Peak SAR (extrapolated) = 35.0 W/kg
SAR(1 g) = 8.41 mW/g; SAR(10 g) = 2.24 mW/g
Maximum value of SAR (measured) = 21.1 mW/g

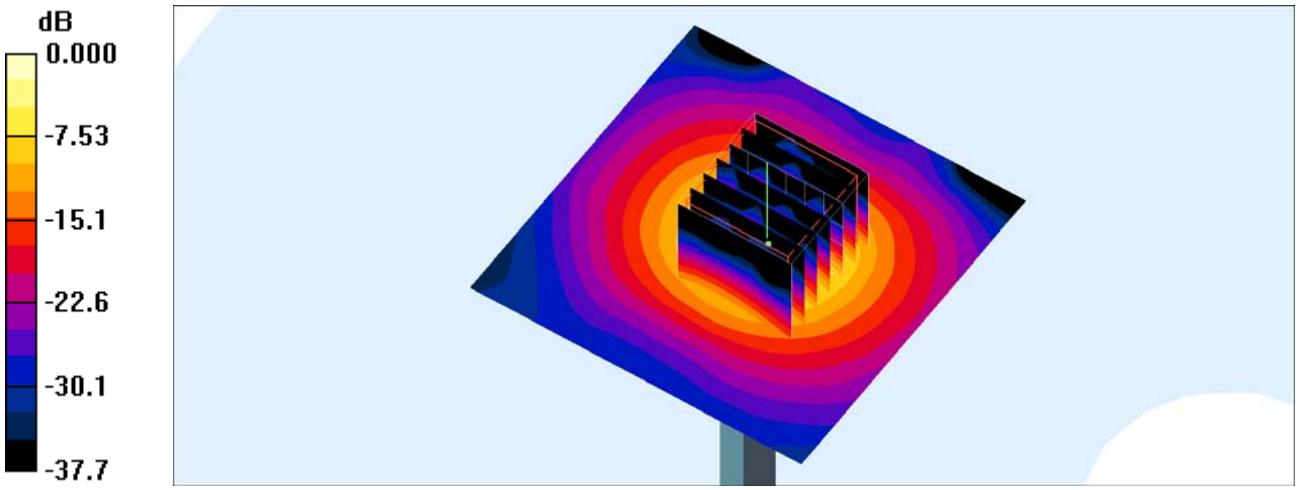

0 dB = 21.1mW/g

Test Laboratory: Sporton International Inc. SAR/HAC Testing Lab Date: 2017/3/8

System Check_Body_5600MHz

DUT: D5GHzV2-1006

Communication System: CW; Frequency: 5600 MHz;Duty Cycle: 1:1
Medium: MSL_5G_170308 Medium parameters used: f = 5600 MHz; σ = 5.96 mho/m; ε_r = 46.2; ρ = 1000 kg/m^3
Ambient Temperature：23.1 ℃; Liquid Temperature：22.1 ℃

DASY4 Configuration:
- Probe: EX3DV4 - SN3955; ConvF(3.91, 3.91, 3.91); Calibrated: 2016/11/24
- Sensor-Surface: 1.4mm (Mechanical Surface Detection)
- Electronics: DAE4 Sn1399; Calibrated: 2016/11/17
- Phantom: SAM_Right; Type: QD000P40CD; Serial: TP:1815
- ;Postprocessing SW: SEMCAD, V1.8 Build 159

Pin=100mW/Area Scan (71x71x1): Measurement grid: dx=10mm, dy=10mm
Maximum value of SAR (interpolated) = 18.6 mW/g

Pin=100mW/Zoom Scan (7x7x7)/Cube 0: Measurement grid: dx=4mm, dy=4mm, dz=1.4mm
Reference Value = 65.9 V/m; Power Drift = 0.146 dB
Peak SAR (extrapolated) = 36.6 W/kg
SAR(1 g) = 7.78 mW/g; SAR(10 g) = 2.1 mW/g
Maximum value of SAR (measured) = 20.6 mW/g

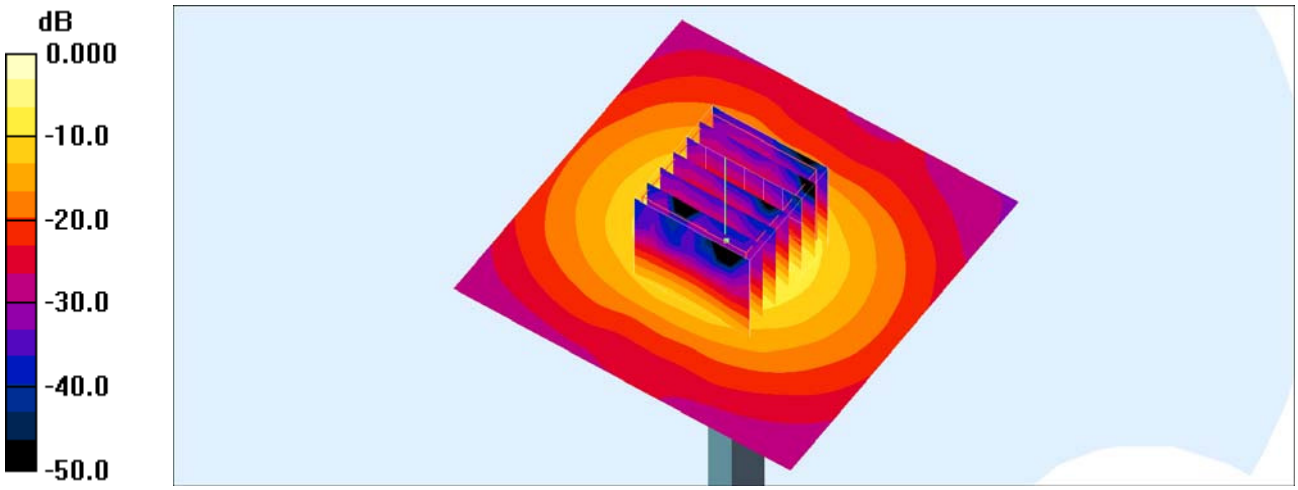

0 dB = 20.6mW/g

Test Laboratory: Sporton International Inc. SAR/HAC Testing Lab Date: 2017/3/6

System Check_Head_5750MHz

DUT: D5GHzV2-1006

Communication System: CW; Frequency: 5750 MHz;Duty Cycle: 1:1
Medium: HSL_5G_170306 Medium parameters used: f = 5750 MHz; σ = 5.19 mho/m; ε_r = 36.6; ρ = 1000 kg/m^3
Ambient Temperature：23.7 ℃; Liquid Temperature：22.7 ℃

DASY4 Configuration:
- Probe: EX3DV4 - SN3931; ConvF(4.84, 4.84, 4.84); Calibrated: 2016/10/3
- Sensor-Surface: 1.4mm (Mechanical Surface Detection)
- Electronics: DAE3 Sn577; Calibrated: 2016/9/28
- Phantom: SAM_Right; Type: QD000P40CD; Serial: TP:1815
- ;Postprocessing SW: SEMCAD, V1.8 Build 159

Pin=100mW/Area Scan (71x71x1): Measurement grid: dx=10mm, dy=10mm
Maximum value of SAR (interpolated) = 20.9 mW/g

Pin=100mW/Zoom Scan (7x7x7)/Cube 0: Measurement grid: dx=4mm, dy=4mm, dz=1.4mm
Reference Value = 70.4 V/m; Power Drift = -0.065 dB
Peak SAR (extrapolated) = 35.4 W/kg
SAR(1 g) = 7.99 mW/g; SAR(10 g) = 2.25 mW/g
Maximum value of SAR (measured) = 20.7 mW/g

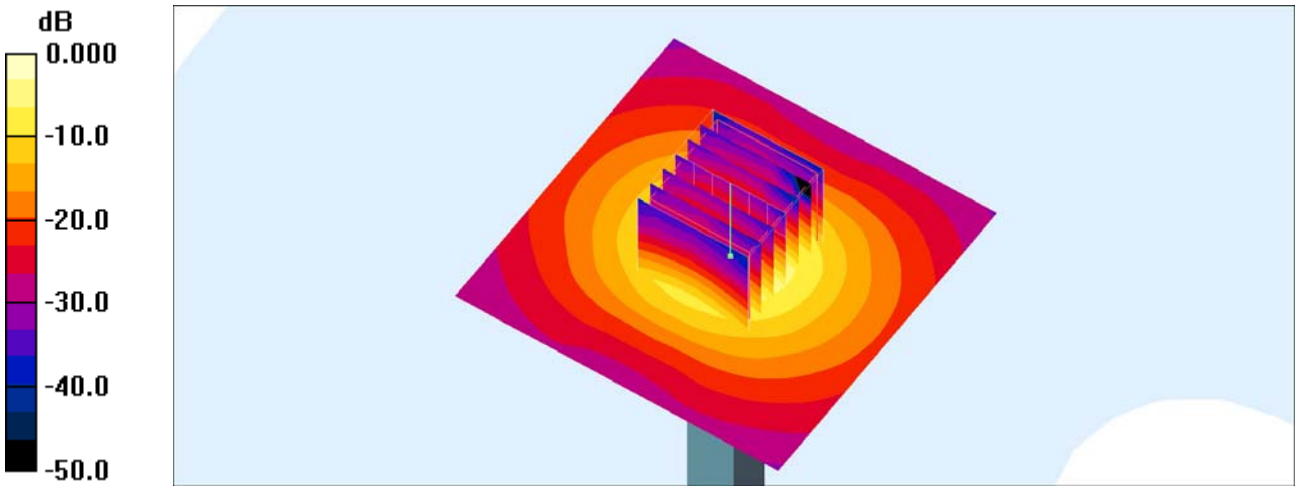

0 dB = 20.7mW/g

Test Laboratory: Sporton International Inc. SAR/HAC Testing Lab Date: 2017/3/10

System Check_Body_5750MHz

DUT: D5GHzV2-1006

Communication System: CW; Frequency: 5750 MHz;Duty Cycle: 1:1
Medium: MSL_5G_170310 Medium parameters used: f = 5750 MHz; σ = 6.17 mho/m; ε_r = 45.9; ρ = 1000 kg/m^3
Ambient Temperature：23.2 ℃； Liquid Temperature：22.2 ℃

DASY4 Configuration:
- Probe: EX3DV4 - SN3931; ConvF(4.01, 4.01, 4.01); Calibrated: 2016/10/3
- Sensor-Surface: 1.4mm (Mechanical Surface Detection)
- Electronics: DAE3 Sn577; Calibrated: 2016/9/28
- Phantom: SAM_Right; Type: QD000P40CD; Serial: TP:1815
- ;Postprocessing SW: SEMCAD, V1.8 Build 159

Pin=100mW/Area Scan (71x71x1): Measurement grid: dx=10mm, dy=10mm
Maximum value of SAR (interpolated) = 19.0 mW/g

Pin=100mW/Zoom Scan (7x7x7)/Cube 0: Measurement grid: dx=4mm, dy=4mm, dz=1.4mm
Reference Value = 64.1 V/m; Power Drift = 0.068 dB
Peak SAR (extrapolated) = 32.0 W/kg
SAR(1 g) = 7.52 mW/g; SAR(10 g) = 2.09 mW/g
Maximum value of SAR (measured) = 19.0 mW/g

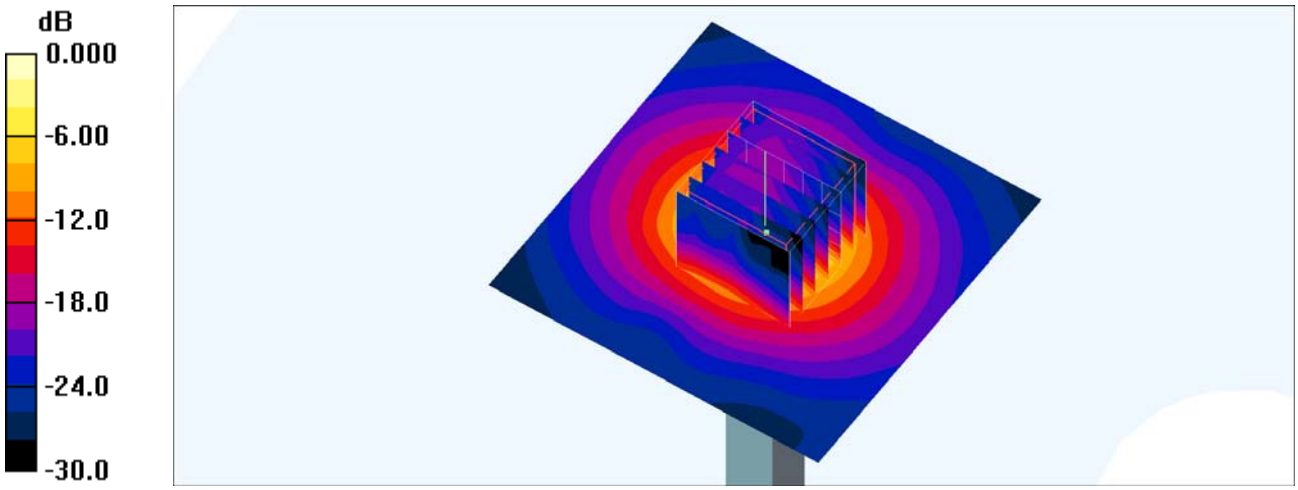

0 dB = 19.0mW/g