System Check_Head_750MHz

DUT: D750V3-1012

Communication System: CW; Frequency: 750 MHz;Duty Cycle: 1:1
Medium: HSL_750_170507 Medium parameters used: f = 750 MHz; σ = 0.888 S/m; ε_r = 40.482; ρ = 1000 kg/m^3
Ambient Temperature：23.2 ℃； Liquid Temperature：22.2 ℃

DASY5 Configuration
- Probe: EX3DV4 - SN3955; ConvF(10.65, 10.65, 10.65); Calibrated: 2016/11/24;
- Sensor-Surface: 1.4mm (Mechanical Surface Detection)
- Electronics: DAE4 Sn1399; Calibrated: 2016/11/17
- Phantom: SAM_RIGHT; Type: QD000P40CD; Serial: 1719
- Measurement SW: DASY52, Version 52.8 (8); SEMCAD X Version 14.6.10 (7373)

Pin=250mW/Area Scan (61x61x1): Interpolated grid: dx=1.500 mm, dy=1.500 mm
Maximum value of SAR (interpolated) = 2.71 W/kg

Pin=250mW/Zoom Scan (5x5x7)/Cube 0: Measurement grid: dx=8mm, dy=8mm, dz=5mm
Reference Value = 56.31 V/m; Power Drift = -0.01 dB
Peak SAR (extrapolated) = 3.12 W/kg
SAR(1 g) = 2.14 W/kg; SAR(10 g) = 1.4 W/kg
Maximum value of SAR (measured) = 2.69 W/kg

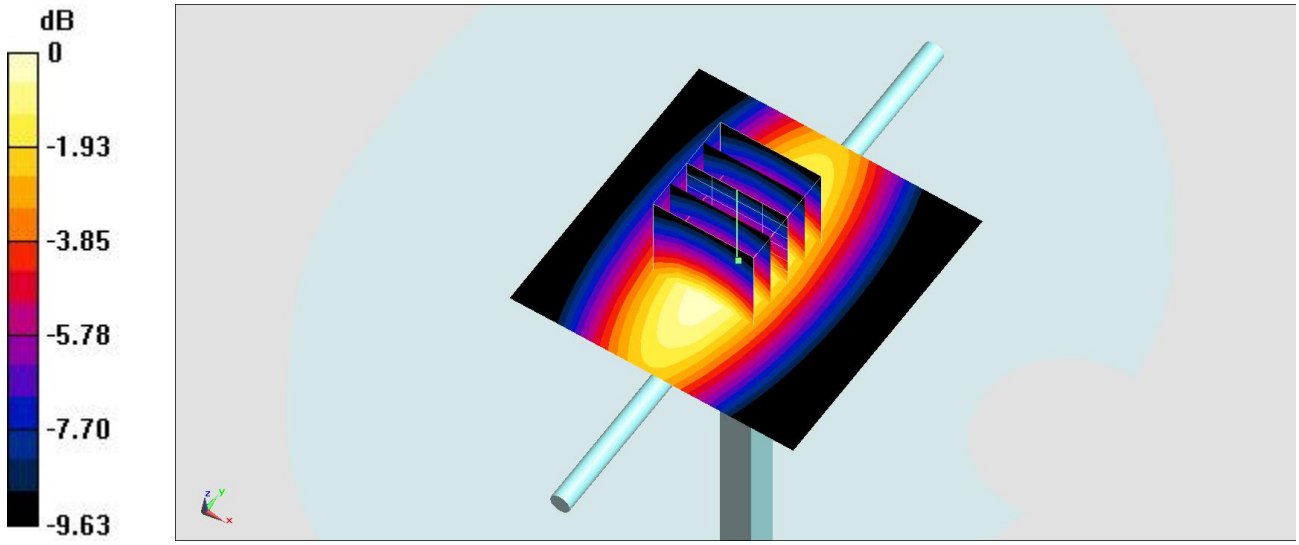

0 dB = 2.69 W/kg = 4.30 dBW/kg

System Check_Body_750MHz

DUT: D750V3-1012

Communication System: CW; Frequency: 750 MHz;Duty Cycle: 1:1
Medium: MSL_750_170506 Medium parameters used: f = 750 MHz; σ = 0.959 S/m; ε_r = 55.209; ρ = 1000 kg/m^3
Ambient Temperature：23.3 ℃； Liquid Temperature：22.3 ℃

DASY5 Configuration
- Probe: EX3DV4 - SN3976; ConvF(10.68, 10.68, 10.68); Calibrated: 2017/2/21;
- Sensor-Surface: 1.4mm (Mechanical Surface Detection)
- Electronics: DAE4 Sn1424; Calibrated: 2017/2/16
- Phantom: SAM_RIGHT; Type: QD000P40CD; Serial: 1719
- Measurement SW: DASY52, Version 52.8 (8); SEMCAD X Version 14.6.10 (7373)

Pin=250mW/Area Scan (61x61x1): Interpolated grid: dx=1.500 mm, dy=1.500 mm
Maximum value of SAR (interpolated) = 2.52 W/kg

Pin=250mW/Zoom Scan (5x5x7)/Cube 0: Measurement grid: dx=8mm, dy=8mm, dz=5mm
Reference Value = 52.22 V/m; Power Drift = -0.02 dB
Peak SAR (extrapolated) = 2.89 W/kg
SAR(1 g) = 2.02 W/kg; SAR(10 g) = 1.37 W/kg
Maximum value of SAR (measured) = 2.50 W/kg

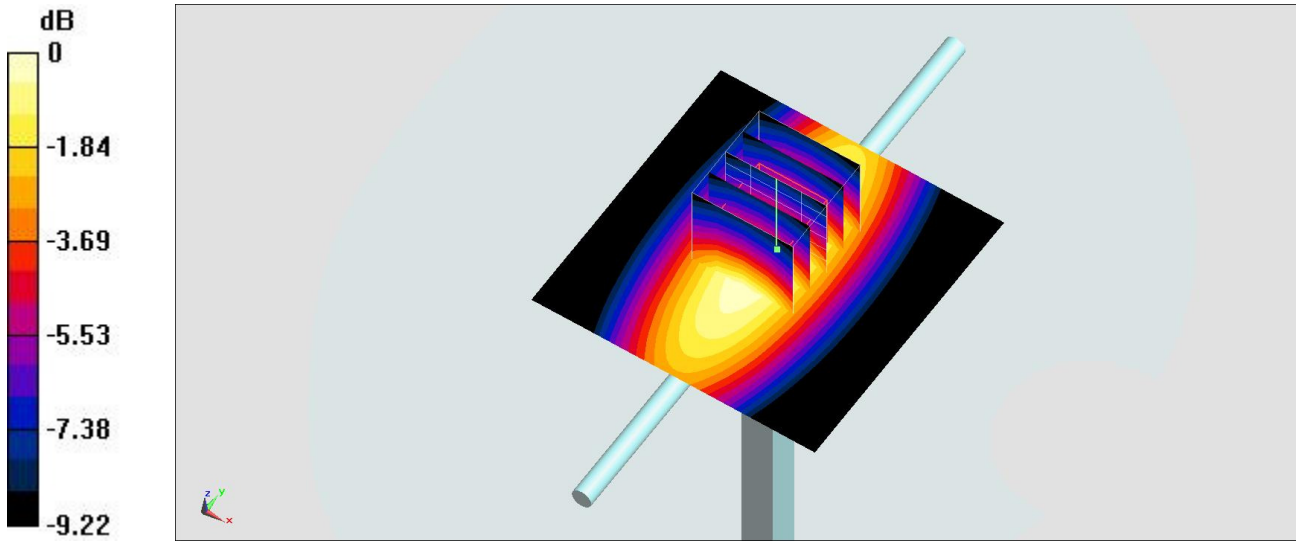

0 dB = 2.50 W/kg = 3.98 dBW/kg

System Check_Head_835MHz

DUT: D835V2-499

Communication System: CW; Frequency: 835 MHz;Duty Cycle: 1:1
Medium: HSL_850_170507 Medium parameters used: f = 835 MHz; σ = 0.905 S/m; ε_r = 42.891; ρ = 1000 kg/m^3
Ambient Temperature：23.2 ℃； Liquid Temperature：22.2 ℃

DASY5 Configuration
- Probe: EX3DV4 - SN3955; ConvF(10.33, 10.33, 10.33); Calibrated: 2016/11/24;
- Sensor-Surface: 1.4mm (Mechanical Surface Detection)
- Electronics: DAE4 Sn1399; Calibrated: 2016/11/17
- Phantom: SAM_RIGHT; Type: QD000P40CD; Serial: 1719
- Measurement SW: DASY52, Version 52.8 (8); SEMCAD X Version 14.6.10 (7373)

Pin=250mW/Area Scan (61x61x1): Interpolated grid: dx=1.500 mm, dy=1.500 mm
Maximum value of SAR (interpolated) = 3.19 W/kg

Pin=250mW/Zoom Scan (5x5x7)/Cube 0: Measurement grid: dx=8mm, dy=8mm, dz=5mm
Reference Value = 60.94 V/m; Power Drift = 0.03 dB
Peak SAR (extrapolated) = 3.58 W/kg
SAR(1 g) = 2.39 W/kg; SAR(10 g) = 1.57 W/kg
Maximum value of SAR (measured) = 3.17 W/kg

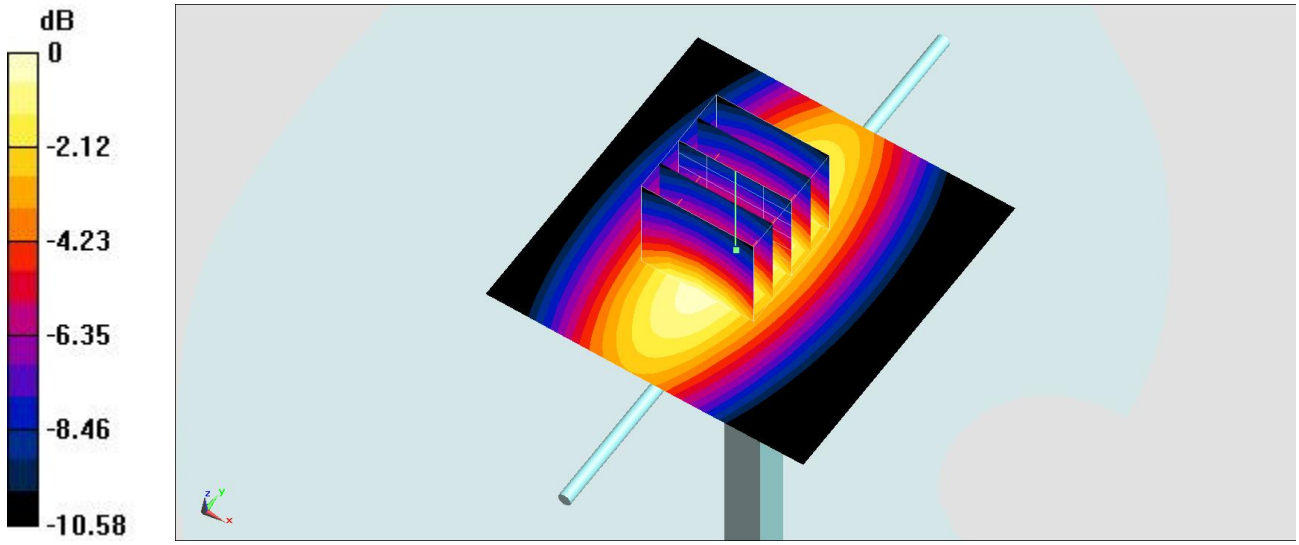

0 dB = 3.17 W/kg = 5.01 dBW/kg

System Check_Head_835MHz

DUT: D835V2-499

Communication System: CW; Frequency: 835 MHz;Duty Cycle: 1:1
Medium: HSL_850_170507 Medium parameters used: f = 835 MHz; σ = 0.905 S/m; ε_r = 42.891; ρ = 1000 kg/m^3
Ambient Temperature：23.2 ℃； Liquid Temperature：22.2 ℃

DASY5 Configuration
- Probe: ES3DV3 - SN3270; ConvF(6.03, 6.03, 6.03); Calibrated: 2016/8/26;
- Sensor-Surface: 3mm (Mechanical Surface Detection)
- Electronics: DAE4 Sn778; Calibrated: 2016/5/12
- Phantom: SAM_RIGHT; Type: QD000P40CD; Serial: 1719
- Measurement SW: DASY52, Version 52.8 (8); SEMCAD X Version 14.6.10 (7373)

Pin=250mW/Area Scan (61x61x1): Interpolated grid: dx=1.500 mm, dy=1.500 mm
Maximum value of SAR (interpolated) = 2.88 W/kg

Pin=250mW/Zoom Scan (5x5x7)/Cube 0: Measurement grid: dx=8mm, dy=8mm, dz=5mm
Reference Value = 57.82 V/m; Power Drift = 0.01 dB
Peak SAR (extrapolated) = 3.64 W/kg
SAR(1 g) = 2.45 W/kg; SAR(10 g) = 1.62 W/kg
Maximum value of SAR (measured) = 2.85 W/kg

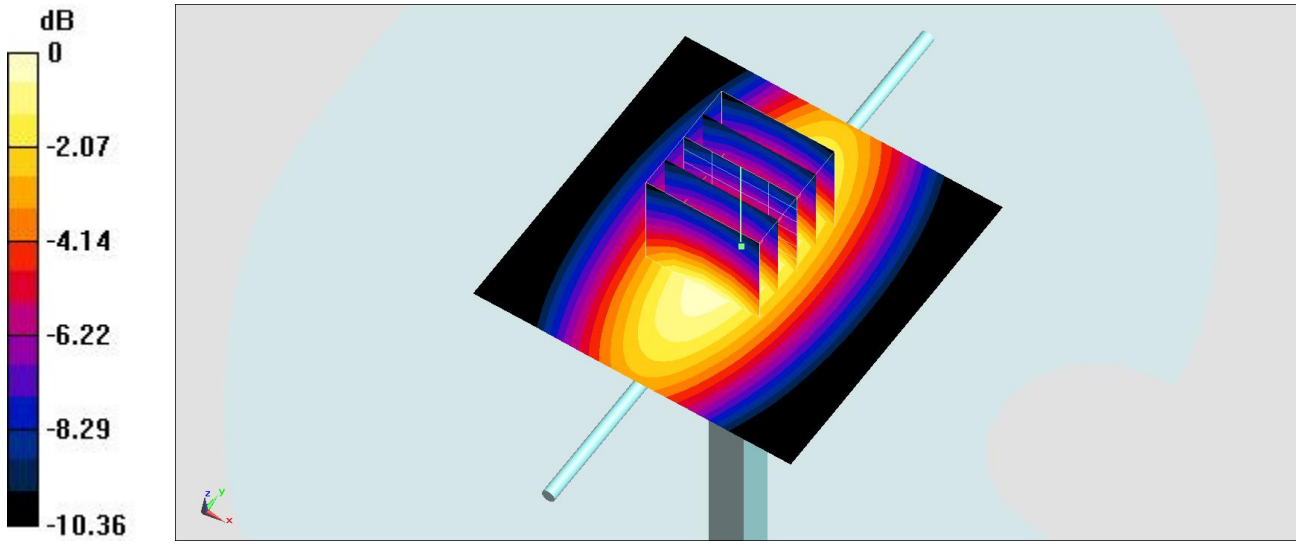

0 dB = 2.85 W/kg = 4.55 dBW/kg

System Check_Body_835MHz

DUT: D835V2-499

Communication System: CW; Frequency: 835 MHz;Duty Cycle: 1:1
Medium: MSL_850_170506 Medium parameters used: f = 835 MHz; σ = 0.969 S/m; ε_r = 56.944; ρ = 1000 kg/m^3
Ambient Temperature：23.3 ℃； Liquid Temperature：22.3 ℃

DASY5 Configuration
- Probe: EX3DV4 - SN3976; ConvF(10.41, 10.41, 10.41); Calibrated: 2017/2/21;
- Sensor-Surface: 1.4mm (Mechanical Surface Detection)
- Electronics: DAE4 Sn1424; Calibrated: 2017/2/16
- Phantom: SAM_RIGHT; Type: QD000P40CD; Serial: 1719
- Measurement SW: DASY52, Version 52.8 (8); SEMCAD X Version 14.6.10 (7373)

Pin=250mW/Area Scan (61x61x1): Interpolated grid: dx=1.500 mm, dy=1.500 mm
Maximum value of SAR (interpolated) = 3.57 W/kg

Pin=250mW/Zoom Scan (5x5x7)/Cube 0: Measurement grid: dx=8mm, dy=8mm, dz=5mm
Reference Value = 62.52 V/m; Power Drift = -0.04 dB
Peak SAR (extrapolated) = 4.00 W/kg
SAR(1 g) = 2.61 W/kg; SAR(10 g) = 1.71 W/kg
Maximum value of SAR (measured) = 3.55 W/kg

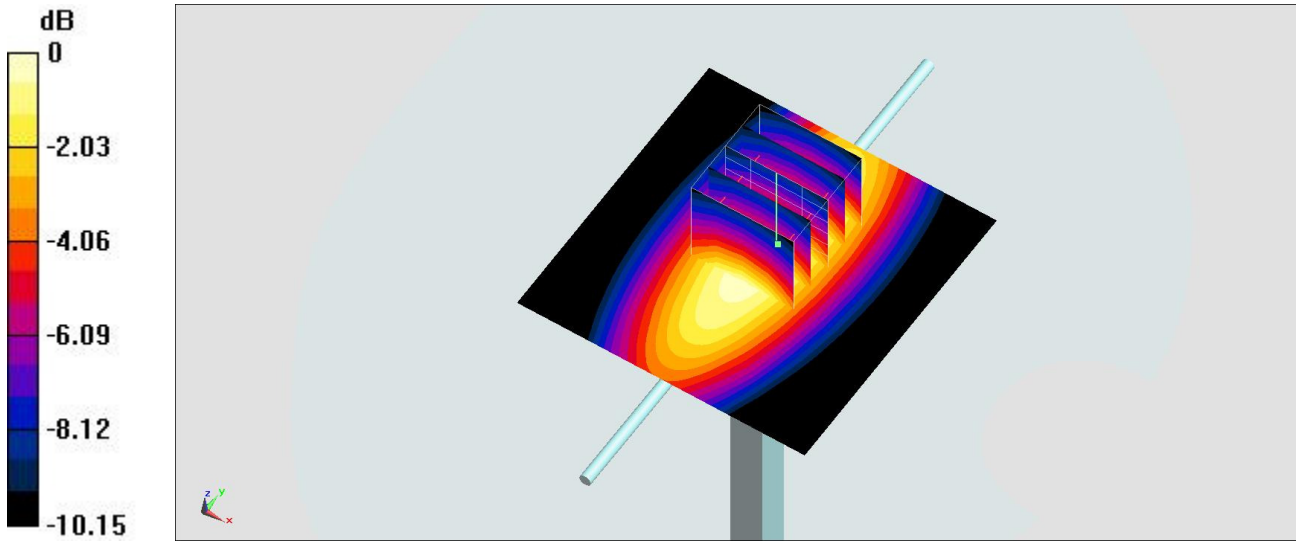

0 dB = 3.55 W/kg = 5.50 dBW/kg

System Check_Head_1750MHz

DUT: D1750V2-1068

Communication System: CW; Frequency: 1750 MHz;Duty Cycle: 1:1
Medium: HSL_1750_170507 Medium parameters used: f = 1750 MHz; σ = 1.377 S/m; ε_r = 41.514; ρ = 1000 kg/m^3
Ambient Temperature：23.3 ℃； Liquid Temperature：22.3 ℃

DASY5 Configuration
- Probe: EX3DV4 - SN3931; ConvF(8.68, 8.68, 8.68); Calibrated: 2016/10/3;
- Sensor-Surface: 1.4mm (Mechanical Surface Detection)
- Electronics: DAE3 Sn577; Calibrated: 2016/9/28
- Phantom: SAM_RIGHT; Type: QD000P40CD; Serial: 1719
- Measurement SW: DASY52, Version 52.8 (8); SEMCAD X Version 14.6.10 (7373)

Pin=250mW/Area Scan (61x61x1): Interpolated grid: dx=1.500 mm, dy=1.500 mm
Maximum value of SAR (interpolated) = 14.5 W/kg

Pin=250mW/Zoom Scan (5x5x7)/Cube 0: Measurement grid: dx=8mm, dy=8mm, dz=5mm
Reference Value = 105.1 V/m; Power Drift = -0.01 dB
Peak SAR (extrapolated) = 17.0 W/kg
SAR(1 g) = 9.43 W/kg; SAR(10 g) = 5.09 W/kg
Maximum value of SAR (measured) = 14.2 W/kg

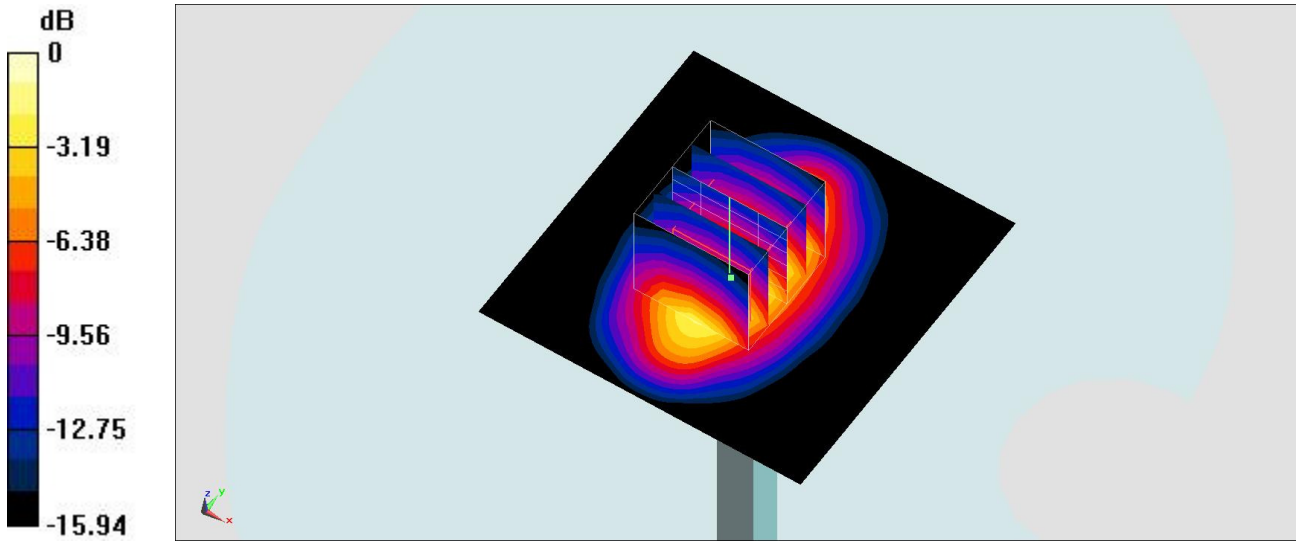

0 dB = 14.2 W/kg = 11.52 dBW/kg

System Check_Head_1750MHz

DUT: D1750V2-1068

Communication System: CW; Frequency: 1750 MHz;Duty Cycle: 1:1
Medium: HSL_1750_170507 Medium parameters used: f = 1750 MHz; σ = 1.377 S/m; ε_r = 41.514; ρ = 1000 kg/m^3
Ambient Temperature：23.3 ℃； Liquid Temperature：22.3 ℃

DASY5 Configuration
- Probe: EX3DV4 - SN3925; ConvF(8.57, 8.57, 8.57); Calibrated: 2016/5/26;
- Sensor-Surface: 1.4mm (Mechanical Surface Detection)
- Electronics: DAE3 Sn495; Calibrated: 2016/5/27
- Phantom: SAM_RIGHT; Type: QD000P40CD; Serial: 1719
- Measurement SW: DASY52, Version 52.8 (8); SEMCAD X Version 14.6.10 (7373)

Pin=250mW/Area Scan (61x61x1): Interpolated grid: dx=1.500 mm, dy=1.500 mm
Maximum value of SAR (interpolated) = 13.1 W/kg

Pin=250mW/Zoom Scan (5x5x7)/Cube 0: Measurement grid: dx=8mm, dy=8mm, dz=5mm
Reference Value = 96.70 V/m; Power Drift = 0.03 dB
Peak SAR (extrapolated) = 16.7 W/kg
SAR(1 g) = 9.34 W/kg; SAR(10 g) = 5.01 W/kg
Maximum value of SAR (measured) = 13.1 W/kg

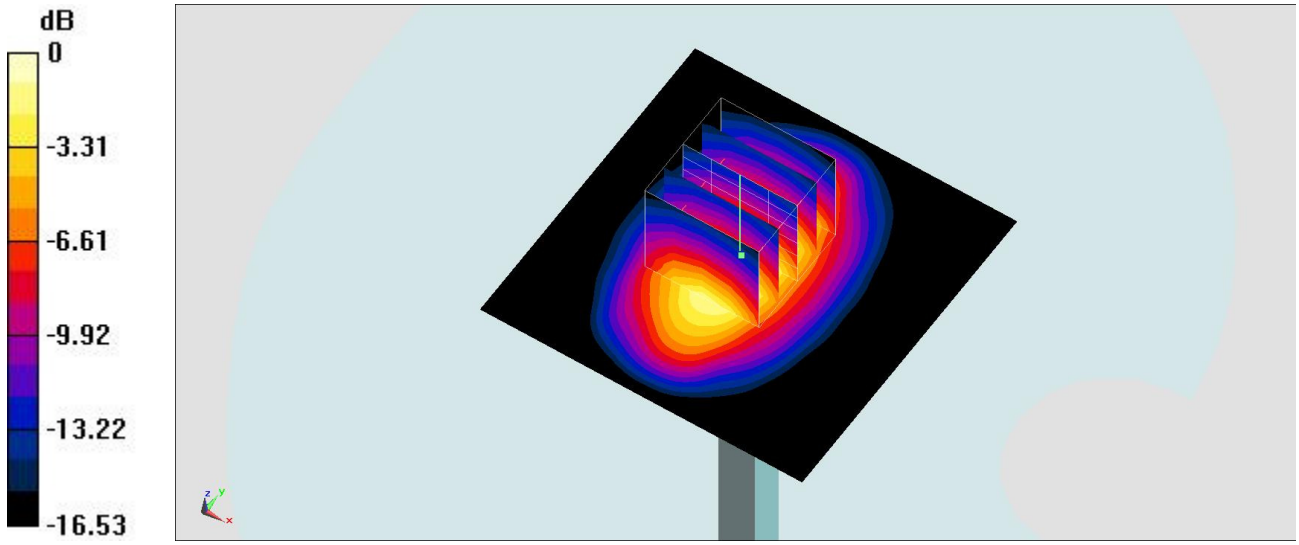

0 dB = 13.1 W/kg = 11.17 dBW/kg

System Check_Body_1750MHz

DUT: D1750V2-1068

Communication System: CW ; Frequency: 1750 MHz;Duty Cycle: 1:1
Medium: MSL_1750_170505 Medium parameters used: f = 1750 MHz; σ = 1.486 S/m; ε_r = 55.902; ρ = 1000 kg/m^3
Ambient Temperature：23.5 ℃； Liquid Temperature：22.5 ℃

DASY5 Configuration
- Probe: EX3DV4 - SN3976; ConvF(8.57, 8.57, 8.57); Calibrated: 2017/2/21;
- Sensor-Surface: 1.4mm (Mechanical Surface Detection)
- Electronics: DAE4 Sn1424; Calibrated: 2017/2/16
- Phantom: SAM_RIGHT; Type: QD000P40CD; Serial: 1719
- Measurement SW: DASY52, Version 52.8 (8); SEMCAD X Version 14.6.10 (7373)

Pin=250mW/Area Scan (61x61x1): Interpolated grid: dx=1.500 mm, dy=1.500 mm
Maximum value of SAR (interpolated) = 14.4 W/kg

Pin=250mW/Zoom Scan (5x5x7)/Cube 0: Measurement grid: dx=8mm, dy=8mm, dz=5mm
Reference Value = 102.3 V/m; Power Drift = 0.02 dB
Peak SAR (extrapolated) = 17.1 W/kg
SAR(1 g) = 9.67 W/kg; SAR(10 g) = 5.24 W/kg
Maximum value of SAR (measured) = 14.6 W/kg

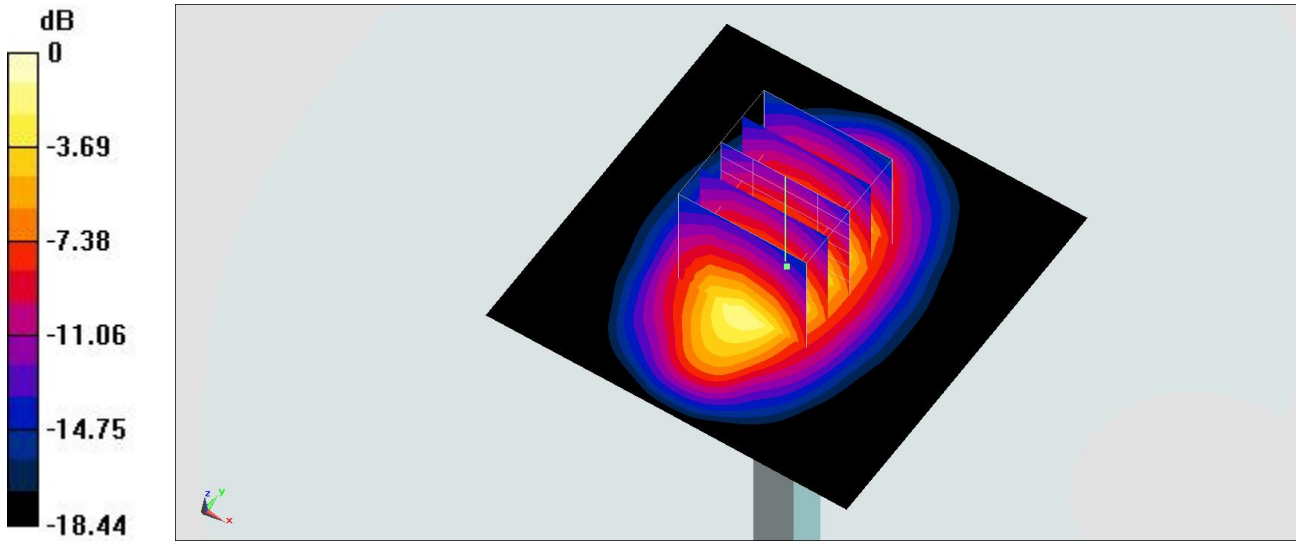

0 dB = 14.6 W/kg = 11.64 dBW/kg

System Check_Head_1900MHz

DUT: D1900V2-5d041

Communication System: CW; Frequency: 1900 MHz;Duty Cycle: 1:1
Medium: HSL_1900_170507 Medium parameters used: f = 1900 MHz; σ = 1.418 S/m; ε_r = 40.253; ρ = 1000 kg/m^3
Ambient Temperature：23.3 ℃； Liquid Temperature：22.3 ℃

DASY5 Configuration
- Probe: EX3DV4 - SN3578; ConvF(7.99, 7.99, 7.99); Calibrated: 2016/5/11;
- Sensor-Surface: 1.4mm (Mechanical Surface Detection)
- Electronics: DAE4 Sn914; Calibrated: 2017/1/6
- Phantom: SAM_RIGHT; Type: QD000P40CD; Serial: 1719
- Measurement SW: DASY52, Version 52.8 (8); SEMCAD X Version 14.6.10 (7373)

Pin=250mW/Area Scan (61x61x1): Interpolated grid: dx=1.500 mm, dy=1.500 mm
Maximum value of SAR (interpolated) = 15.1 W/kg

Pin=250mW/Zoom Scan (5x5x7)/Cube 0: Measurement grid: dx=8mm, dy=8mm, dz=5mm
Reference Value = 106.4 V/m; Power Drift = 0.06 dB
Peak SAR (extrapolated) = 18.3 W/kg
SAR(1 g) = 9.9 W/kg; SAR(10 g) = 5.14 W/kg
Maximum value of SAR (measured) = 15.4 W/kg

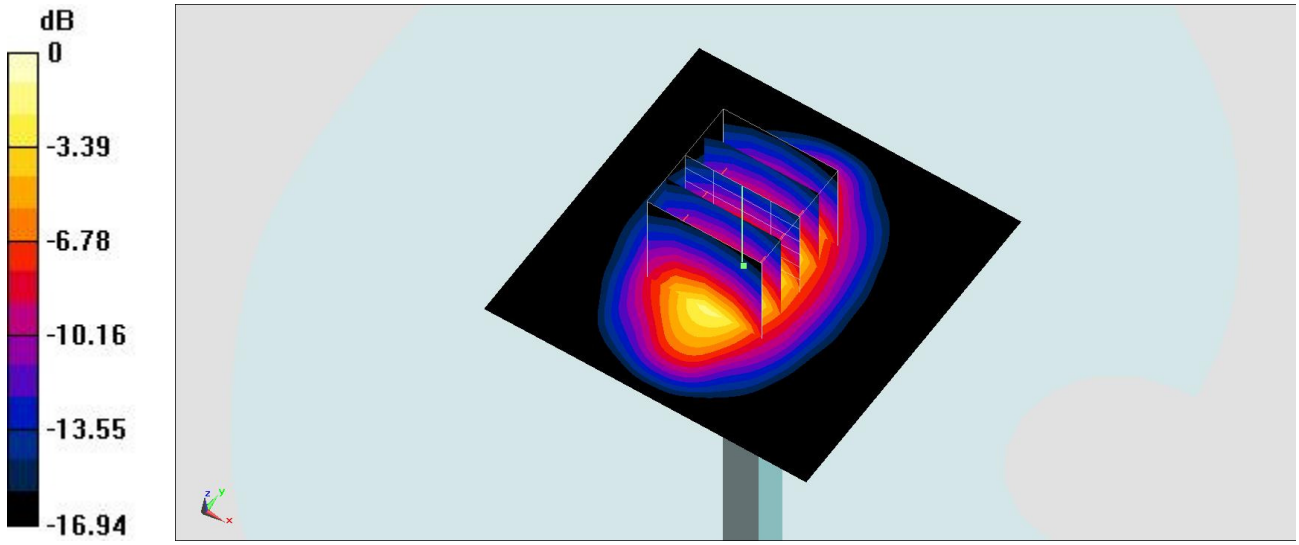

0 dB = 15.4 W/kg = 11.88 dBW/kg

System Check_Head_1900MHz

DUT: D1900V2-5d041

Communication System: CW; Frequency: 1900 MHz;Duty Cycle: 1:1
Medium: HSL_1900_170507 Medium parameters used: f = 1900 MHz; σ = 1.418 S/m; ε_r = 40.253; ρ = 1000 kg/m^3
Ambient Temperature：23.3 ℃； Liquid Temperature：22.3 ℃

DASY5 Configuration
- Probe: EX3DV4 - SN3955; ConvF(8.43, 8.43, 8.43); Calibrated: 2016/11/24;
- Sensor-Surface: 1.4mm (Mechanical Surface Detection)
- Electronics: DAE4 Sn1399; Calibrated: 2016/11/17
- Phantom: SAM_RIGHT; Type: QD000P40CD; Serial: 1719
- Measurement SW: DASY52, Version 52.8 (8); SEMCAD X Version 14.6.10 (7373)

Pin=250mW/Area Scan (61x61x1): Interpolated grid: dx=1.500 mm, dy=1.500 mm
Maximum value of SAR (interpolated) = 15.9 W/kg

Pin=250mW/Zoom Scan (5x5x7)/Cube 0: Measurement grid: dx=8mm, dy=8mm, dz=5mm
Reference Value = 107.0 V/m; Power Drift = 0.11 dB
Peak SAR (extrapolated) = 19.4 W/kg
SAR(1 g) = 10 W/kg; SAR(10 g) = 5.08 W/kg
Maximum value of SAR (measured) = 15.6 W/kg

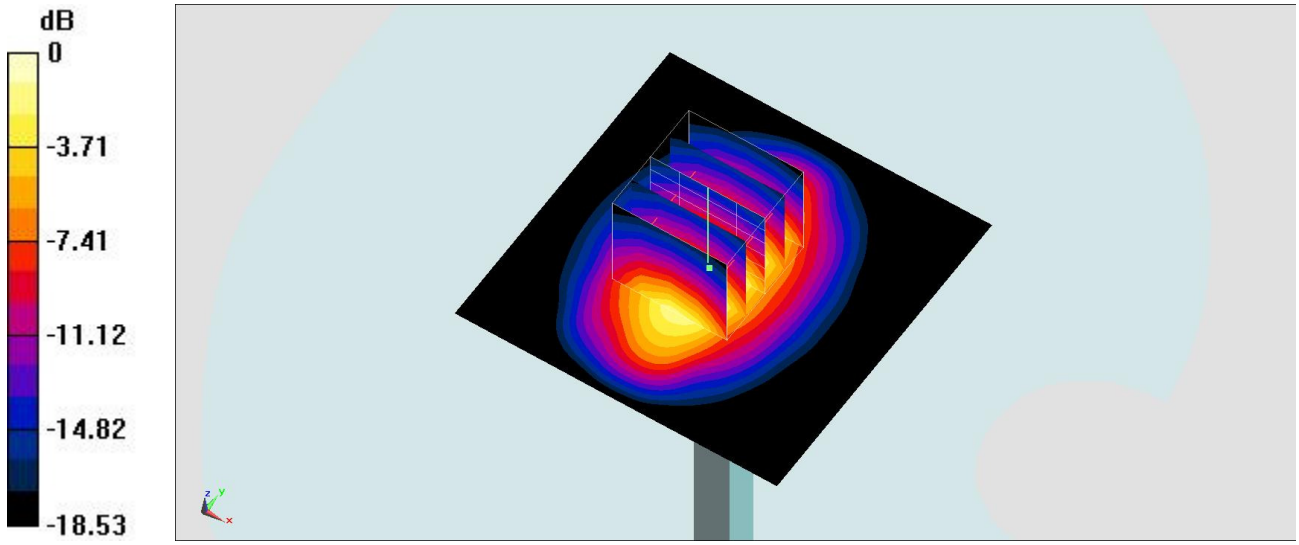

0 dB = 15.6 W/kg = 11.93 dBW/kg

System Check_Body_1900MHz

DUT: D1900V2-5d041

Communication System: CW; Frequency: 1900 MHz;Duty Cycle: 1:1
Medium: MSL_1900_170505 Medium parameters used: f = 1900 MHz; σ = 1.556 S/m; ε_r = 55.286; ρ = 1000 kg/m^3
Ambient Temperature：23.5 ℃； Liquid Temperature：22.5 ℃

DASY5 Configuration
- Probe: EX3DV4 - SN3976; ConvF(8.31, 8.31, 8.31); Calibrated: 2017/2/21;
- Sensor-Surface: 1.4mm (Mechanical Surface Detection)
- Electronics: DAE4 Sn1424; Calibrated: 2017/2/16
- Phantom: SAM_RIGHT; Type: QD000P40CD; Serial: 1719
- Measurement SW: DASY52, Version 52.8 (8); SEMCAD X Version 14.6.10 (7373)

Pin=250mW/Area Scan (61x61x1): Interpolated grid: dx=1.500 mm, dy=1.500 mm
Maximum value of SAR (interpolated) = 14.4 W/kg

Pin=250mW/Zoom Scan (5x5x7)/Cube 0: Measurement grid: dx=8mm, dy=8mm, dz=5mm
Reference Value = 98.82 V/m; Power Drift = -0.11 dB
Peak SAR (extrapolated) = 16.1 W/kg
SAR(1 g) = 9 W/kg; SAR(10 g) = 4.75 W/kg
Maximum value of SAR (measured) = 13.6 W/kg

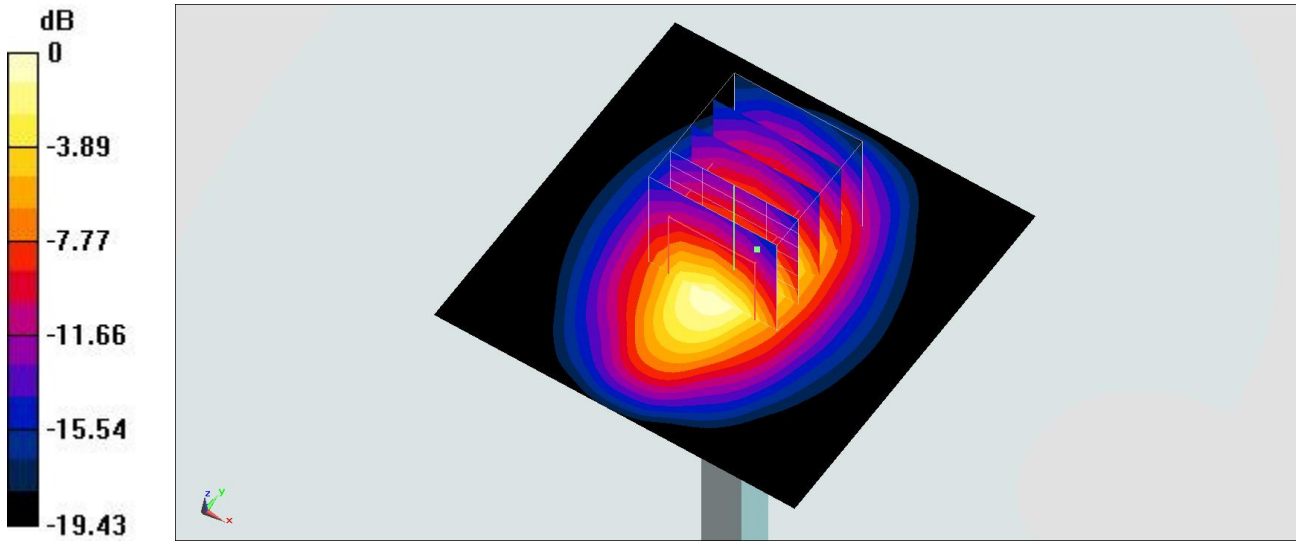

0 dB = 13.6 W/kg = 11.34 dBW/kg

System Check_Head_2300MHz

DUT: D2300V2-1006

Communication System: CW ; Frequency: 2300 MHz;Duty Cycle: 1:1
Medium: HSL_2300_170507 Medium parameters used: f = 2300 MHz; σ = 1.632 S/m; ε_r = 40.291; ρ = 1000 kg/m^3
Ambient Temperature：23.6 ℃； Liquid Temperature：22.6 ℃

DASY5 Configuration
- Probe: EX3DV4 - SN3931; ConvF(7.94, 7.94, 7.94); Calibrated: 2016/10/3;
- Sensor-Surface: 1.4mm (Mechanical Surface Detection)
- Electronics: DAE3 Sn577; Calibrated: 2016/9/28
- Phantom: SAM_RIGHT; Type: QD000P40CD; Serial: 1719
- Measurement SW: DASY52, Version 52.8 (8); SEMCAD X Version 14.6.10 (7373)

Pin=250mW/Area Scan (71x71x1): Interpolated grid: dx=1.200 mm, dy=1.200 mm
Maximum value of SAR (interpolated) = 21.9 W/kg

Pin=250mW/Zoom Scan (7x7x7)/Cube 0: Measurement grid: dx=5mm, dy=5mm, dz=5mm
Reference Value = 118.2 V/m; Power Drift = -0.05 dB
Peak SAR (extrapolated) = 26.8 W/kg
SAR(1 g) = 13.1 W/kg; SAR(10 g) = 6.25 W/kg
Maximum value of SAR (measured) = 21.7 W/kg

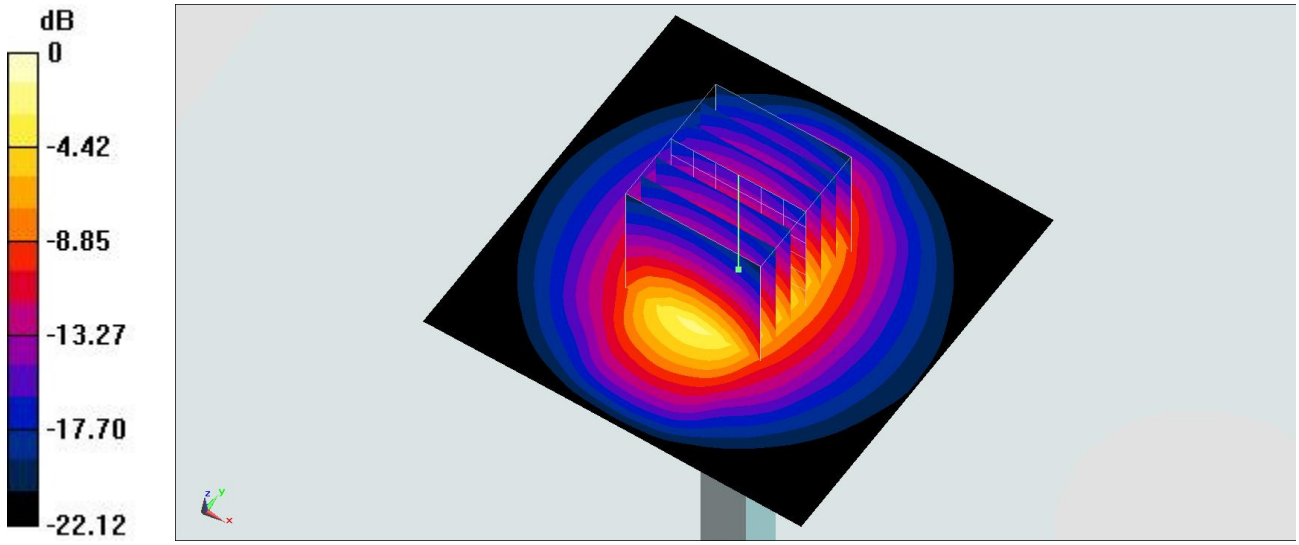

0 dB = 21.7 W/kg = 13.36 dBW/kg

System Check_Body_2300MHz

DUT: D2300V2-1006

Communication System: CW ; Frequency: 2300 MHz;Duty Cycle: 1:1
Medium: MSL_2300_170506 Medium parameters used: f = 2300 MHz; σ = 1.766 S/m; ε_r = 53.397; ρ = 1000 kg/m^3
Ambient Temperature：23.5 ℃； Liquid Temperature：22.5 ℃

DASY5 Configuration
- Probe: EX3DV4 - SN3931; ConvF(7.96, 7.96, 7.96); Calibrated: 2016/10/3;
- Sensor-Surface: 1.4mm (Mechanical Surface Detection)
- Electronics: DAE3 Sn577; Calibrated: 2016/9/28
- Phantom: SAM_RIGHT; Type: QD000P40CD; Serial: 1719
- Measurement SW: DASY52, Version 52.8 (8); SEMCAD X Version 14.6.10 (7373)

Pin=250mW/Area Scan (71x71x1): Interpolated grid: dx=1.200 mm, dy=1.200 mm
Maximum value of SAR (interpolated) = 19.3 W/kg

Pin=250mW/Zoom Scan (7x7x7)/Cube 0: Measurement grid: dx=5mm, dy=5mm, dz=5mm
Reference Value = 106.4 V/m; Power Drift = 0.06 dB
Peak SAR (extrapolated) = 23.4 W/kg
SAR(1 g) = 11.8 W/kg; SAR(10 g) = 5.67 W/kg
Maximum value of SAR (measured) = 19.3 W/kg

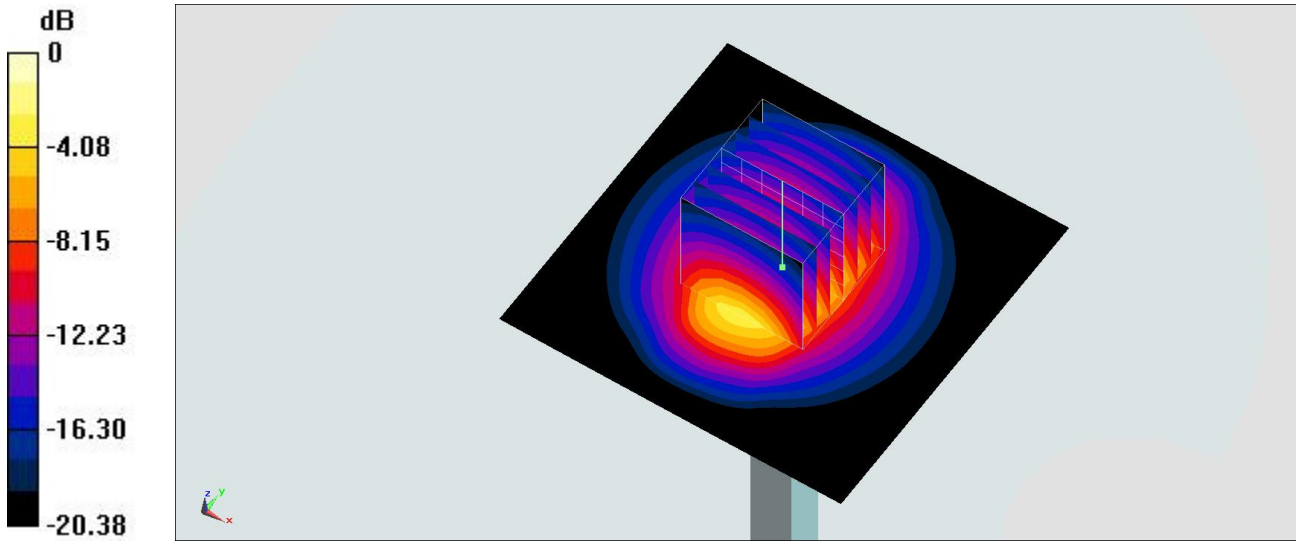

0 dB = 19.3 W/kg = 12.86 dBW/kg

System Check_Head_2450MHz

DUT: D2450V2-926

Communication System: CW; Frequency: 2450 MHz;Duty Cycle: 1:1
Medium: HSL_2450_170507 Medium parameters used: f = 2450 MHz; σ = 1.807 S/m; ε_r = 39.725; ρ = 1000 kg/m^3
Ambient Temperature：23.6 ℃； Liquid Temperature：22.6 ℃

DASY5 Configuration
- Probe: EX3DV4 - SN3976; ConvF(7.83, 7.83, 7.83); Calibrated: 2017/2/21;
- Sensor-Surface: 1.4mm (Mechanical Surface Detection)
- Electronics: DAE4 Sn1424; Calibrated: 2017/2/16
- Phantom: SAM_RIGHT; Type: QD000P40CD; Serial: 1719
- Measurement SW: DASY52, Version 52.8 (8); SEMCAD X Version 14.6.10 (7373)

Pin=250mW/Area Scan (71x71x1): Interpolated grid: dx=1.200 mm, dy=1.200 mm
Maximum value of SAR (interpolated) = 18.1 W/kg

Pin=250mW/Zoom Scan (7x7x7)/Cube 0: Measurement grid: dx=5mm, dy=5mm, dz=5mm
Reference Value = 108.6 V/m; Power Drift = 0.10 dB
Peak SAR (extrapolated) = 26.5 W/kg
SAR(1 g) = 12.3 W/kg; SAR(10 g) = 5.64 W/kg
Maximum value of SAR (measured) = 21.0 W/kg

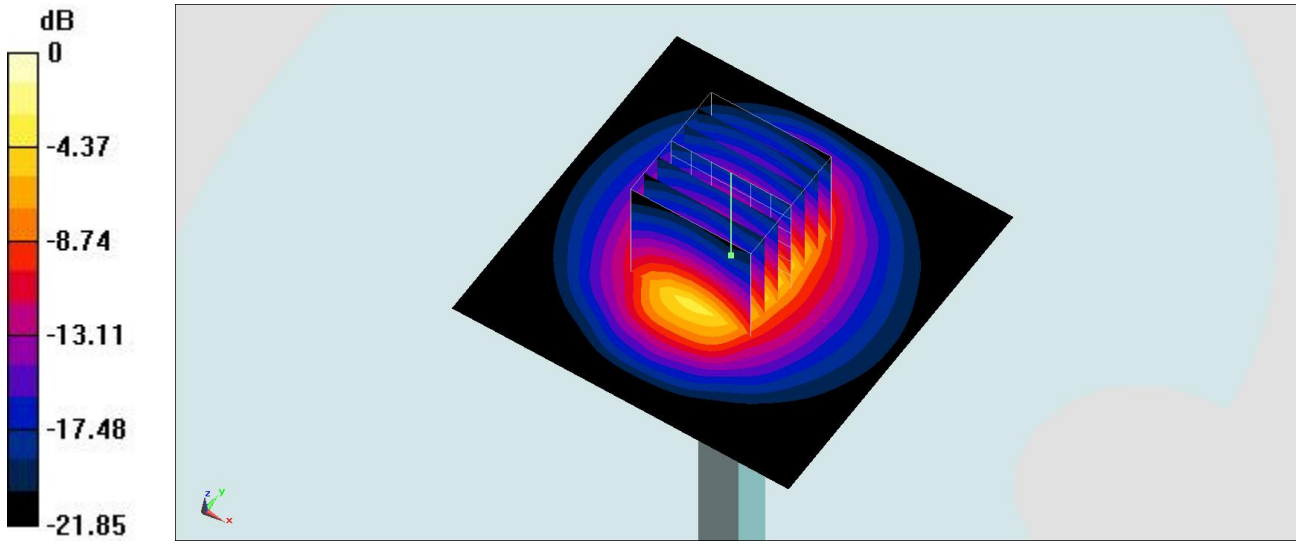

0 dB = 21.0 W/kg = 13.22 dBW/kg

System Check_Body_2450MHz

DUT: D2450V2-926

Communication System: CW ; Frequency: 2450 MHz;Duty Cycle: 1:1
Medium: MSL_2450_170506 Medium parameters used: f = 2450 MHz; σ = 1.96 S/m; ε_r = 52.965; ρ = 1000 kg/m^3
Ambient Temperature：23.5 ℃; Liquid Temperature：22.5 ℃

DASY5 Configuration
- Probe: EX3DV4 - SN3976; ConvF(7.93, 7.93, 7.93); Calibrated: 2017/2/21;
- Sensor-Surface: 1.4mm (Mechanical Surface Detection)
- Electronics: DAE4 Sn1424; Calibrated: 2017/2/16
- Phantom: SAM_RIGHT; Type: QD000P40CD; Serial: 1719
- Measurement SW: DASY52, Version 52.8 (8); SEMCAD X Version 14.6.10 (7373)

Pin=250mW/Area Scan (61x61x1): Interpolated grid: dx=1.200 mm, dy=1.200 mm
Maximum value of SAR (interpolated) = 21.7 W/kg

Pin=250mW/Zoom Scan (7x7x7)/Cube 0: Measurement grid: dx=5mm, dy=5mm, dz=5mm
Reference Value = 108.6 V/m; Power Drift = -0.04 dB
Peak SAR (extrapolated) = 26.2 W/kg
SAR(1 g) = 12.7 W/kg; SAR(10 g) = 5.97 W/kg
Maximum value of SAR (measured) = 21.3 W/kg

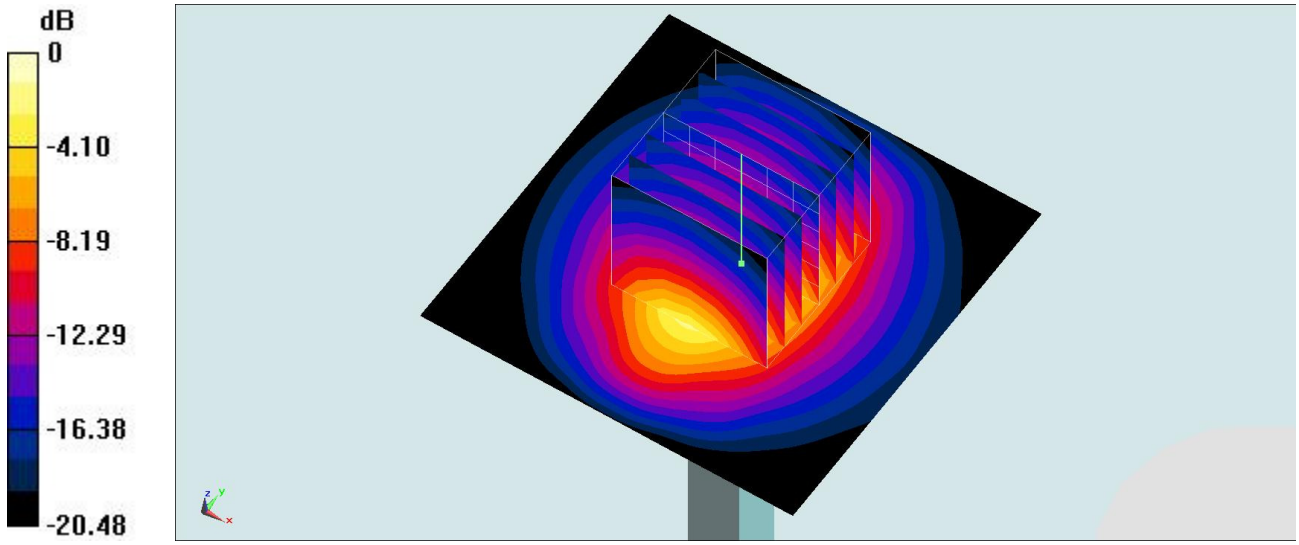

0 dB = 21.3 W/kg = 13.28 dBW/kg

System Check_Head_2600MHz

DUT: D2600V2-1008

Communication System: CW; Frequency: 2600 MHz;Duty Cycle: 1:1
Medium: HSL_2600_170507 Medium parameters used: f = 2600 MHz; σ = 1.985 S/m; ε_r = 39.138; ρ = 1000 kg/m^3
Ambient Temperature：23.6 ℃； Liquid Temperature：22.6 ℃

DASY5 Configuration
- Probe: EX3DV4 - SN3976; ConvF(7.6, 7.6, 7.6); Calibrated: 2017/2/21;
- Sensor-Surface: 1.4mm (Mechanical Surface Detection)
- Electronics: DAE4 Sn1424; Calibrated: 2017/2/16
- Phantom: SAM_RIGHT; Type: QD000P40CD; Serial: 1719
- Measurement SW: DASY52, Version 52.8 (8); SEMCAD X Version 14.6.10 (7373)

Pin=250mW/Area Scan (61x61x1): Interpolated grid: dx=1.200 mm, dy=1.200 mm
Maximum value of SAR (interpolated) = 23.0 W/kg

Pin=250mW/Zoom Scan (7x7x7)/Cube 0: Measurement grid: dx=5mm, dy=5mm, dz=5mm
Reference Value = 111.6 V/m; Power Drift = -0.02 dB
Peak SAR (extrapolated) = 29.2 W/kg
SAR(1 g) = 13.3 W/kg; SAR(10 g) = 5.95 W/kg
Maximum value of SAR (measured) = 23.0 W/kg

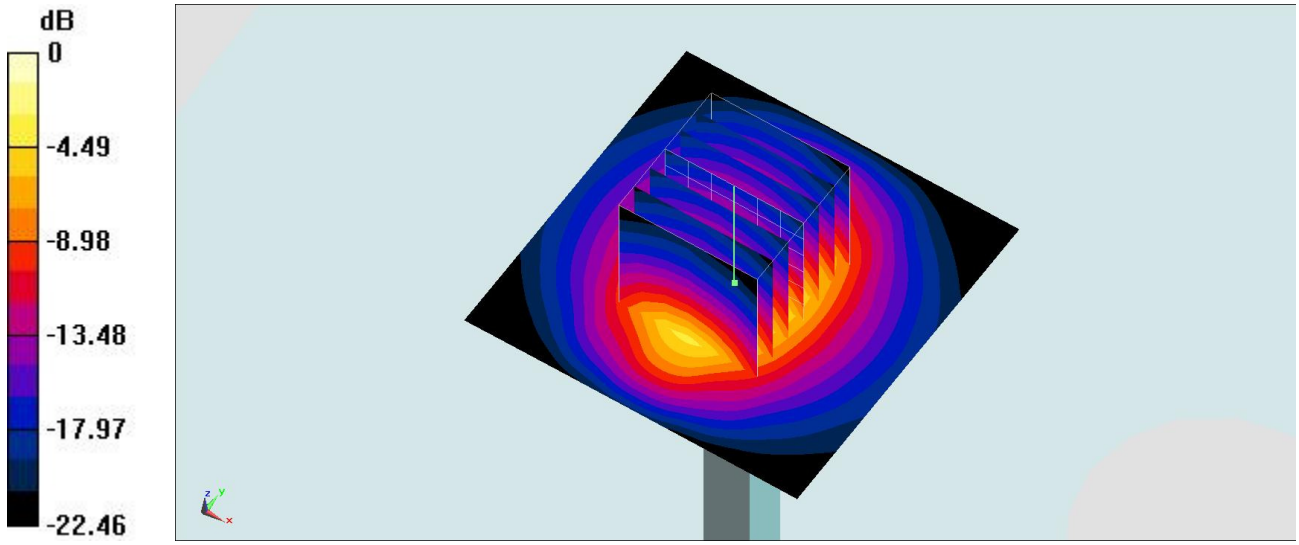

0 dB = 23.0 W/kg = 13.62 dBW/kg

System Check_Body_2600MHz

DUT: D2600V2-1008

Communication System: CW ; Frequency: 2600 MHz;Duty Cycle: 1:1
Medium: MSL_2600_170506 Medium parameters used: f = 2600 MHz; σ = 2.167 S/m; ε_r = 52.469; ρ = 1000 kg/m^3
Ambient Temperature：23.5 ℃； Liquid Temperature：22.5 ℃

DASY5 Configuration
- Probe: EX3DV4 - SN3976; ConvF(7.59, 7.59, 7.59); Calibrated: 2017/2/21;
- Sensor-Surface: 1.4mm (Mechanical Surface Detection)
- Electronics: DAE4 Sn1424; Calibrated: 2017/2/16
- Phantom: SAM_RIGHT; Type: QD000P40CD; Serial: 1719
- Measurement SW: DASY52, Version 52.8 (8); SEMCAD X Version 14.6.10 (7373)

Pin=250mW/Area Scan (61x61x1): Interpolated grid: dx=1.200 mm, dy=1.200 mm
Maximum value of SAR (interpolated) = 21.1 W/kg

Pin=250mW/Zoom Scan (7x7x7)/Cube 0: Measurement grid: dx=5mm, dy=5mm, dz=5mm
Reference Value = 98.64 V/m; Power Drift = 0.02 dB
Peak SAR (extrapolated) = 28.7 W/kg
SAR(1 g) = 13.5 W/kg; SAR(10 g) = 6.05 W/kg
Maximum value of SAR (measured) = 21.0 W/kg

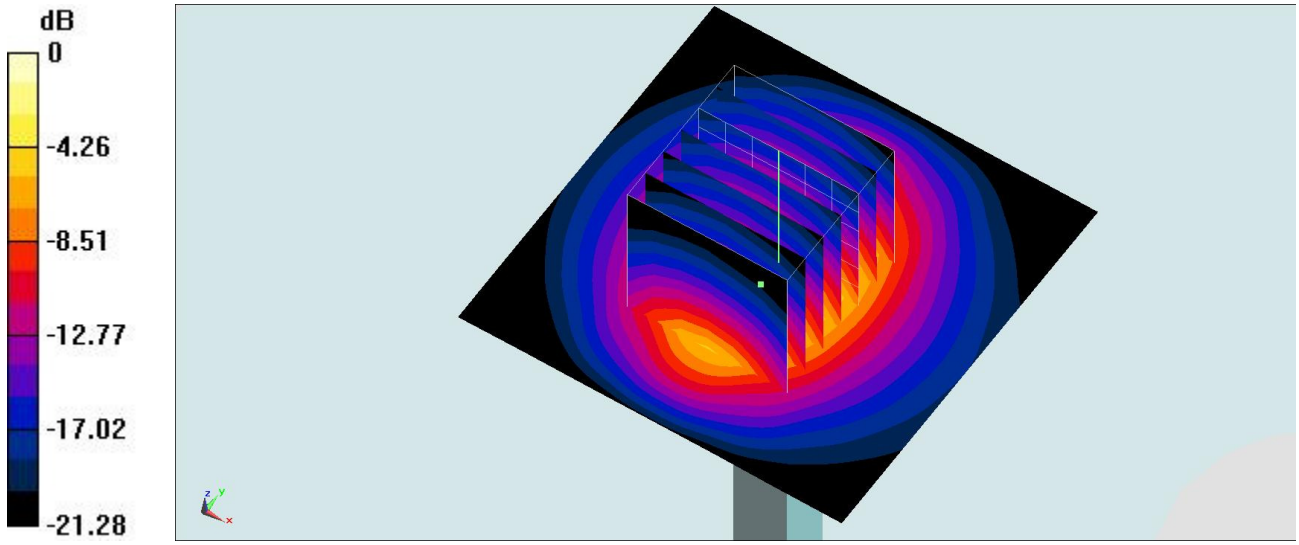

0 dB = 21.0 W/kg = 13.22 dBW/kg

System Check_Head_5250MHz

DUT: D5GHzV2-1128

Communication System: CW; Frequency: 5250 MHz;Duty Cycle: 1:1
Medium: HSL_5G_170615 Medium parameters used: f = 5250 MHz; σ = 4.498 S/m; ε_r = 35.675; ρ = 1000 kg/m^3
Ambient Temperature：23.5 ℃； Liquid Temperature：22.5 ℃

DASY5 Configuration
- Probe: EX3DV4 - SN3976; ConvF(5.56, 5.56, 5.56); Calibrated: 2017/2/21;
- Sensor-Surface: 1.4mm (Mechanical Surface Detection)
- Electronics: DAE4 Sn1424; Calibrated: 2017/2/16
- Phantom: SAM_RIGHT; Type: QD000P40CD; Serial: 1719
- Measurement SW: DASY52, Version 52.8 (8); SEMCAD X Version 14.6.10 (7373)

Pin=100mW/Area Scan (71x71x1): Interpolated grid: dx=1.000 mm, dy=1.000 mm
Maximum value of SAR (interpolated) = 19.2 W/kg

Pin=100mW/Zoom Scan (7x7x7)/Cube 0: Measurement grid: dx=4mm, dy=4mm, dz=1.4mm
Reference Value = 74.61 V/m; Power Drift = -0.14 dB
Peak SAR (extrapolated) = 33.6 W/kg
SAR(1 g) = 8.06 W/kg; SAR(10 g) = 2.24 W/kg
Maximum value of SAR (measured) = 19.5 W/kg

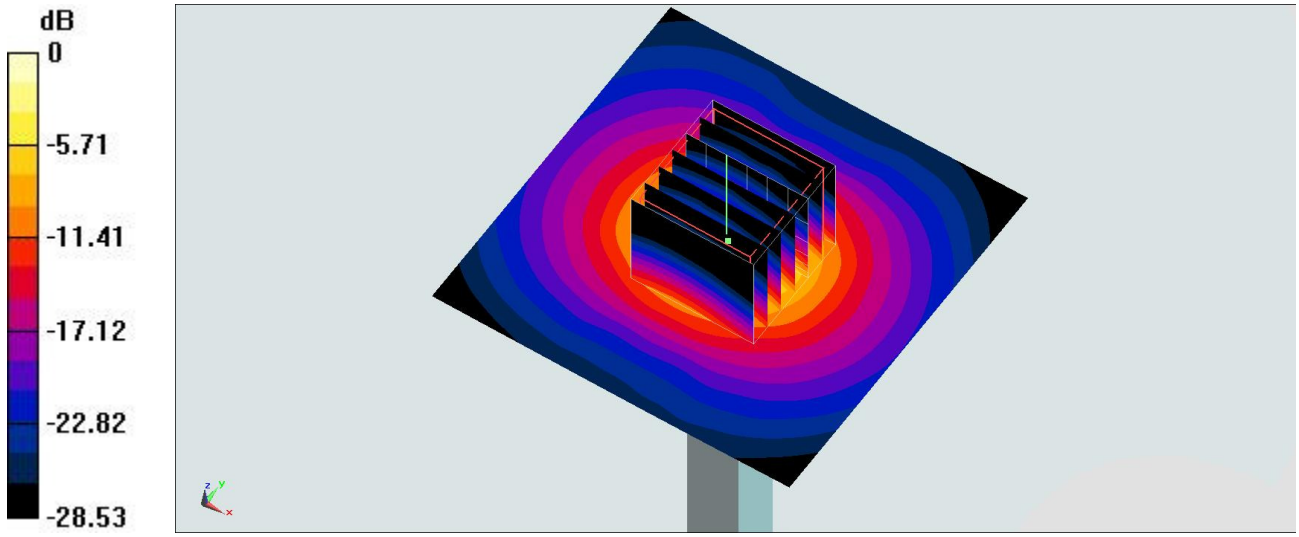

0 dB = 19.5 W/kg = 12.90 dBW/kg

System Check_Body_5250MHz

DUT: D5GHzV2-1128

Communication System: CW; Frequency: 5250 MHz;Duty Cycle: 1:1
Medium: MSL_5G_170507 Medium parameters used: f = 5250 MHz; σ = 5.562 S/m; ε_r = 47.033; ρ = 1000 kg/m^3
Ambient Temperature：23.3 ℃； Liquid Temperature：22.3 ℃

DASY5 Configuration
- Probe: EX3DV4 - SN3976; ConvF(4.87, 4.87, 4.87); Calibrated: 2017/2/21;
- Sensor-Surface: 1.4mm (Mechanical Surface Detection)
- Electronics: DAE4 Sn1424; Calibrated: 2017/2/16
- Phantom: SAM LEFT; Type: QD000P40CD; Serial: TP:1718
- Measurement SW: DASY52, Version 52.8 (8); SEMCAD X Version 14.6.10 (7373)

Pin=100mW/Area Scan (71x71x1): Interpolated grid: dx=1.000 mm, dy=1.000 mm
Maximum value of SAR (interpolated) = 19.8 W/kg

Pin=100mW/Zoom Scan (7x7x7)/Cube 0: Measurement grid: dx=4mm, dy=4mm, dz=1.4mm
Reference Value = 67.61 V/m; Power Drift = -0.10 dB
Peak SAR (extrapolated) = 36.3 W/kg
SAR(1 g) = 7.55 W/kg; SAR(10 g) = 2.01 W/kg
Maximum value of SAR (measured) = 21.2 W/kg

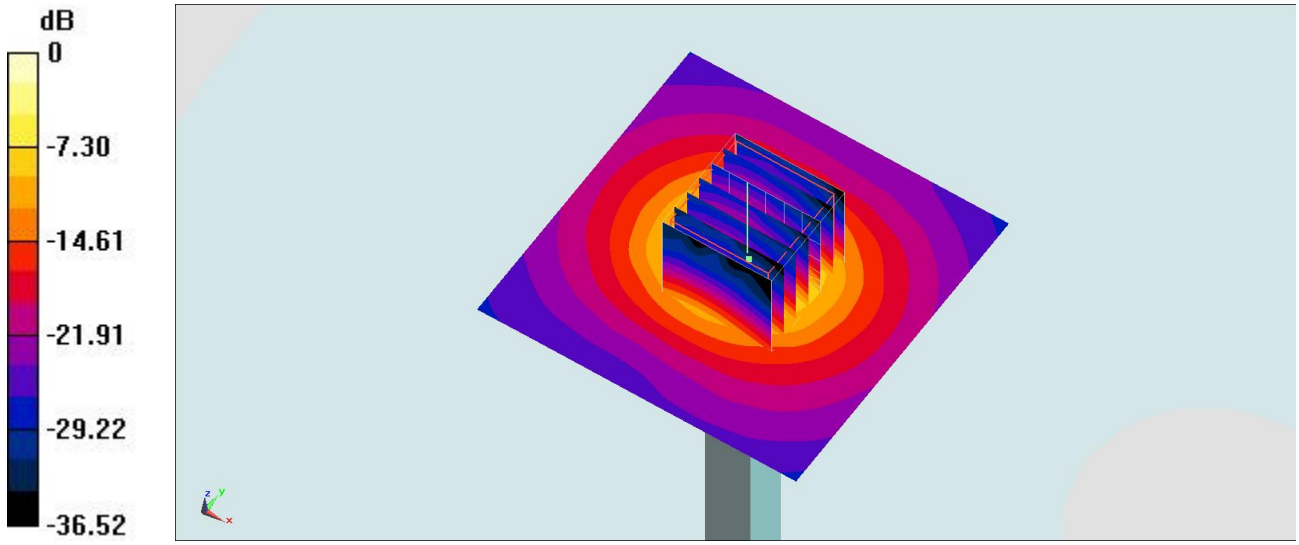

0 dB = 21.2 W/kg = 13.26 dBW/kg

System Check_Head_5600MHz

DUT: D5GHzV2-1128

Communication System: CW; Frequency: 5600 MHz;Duty Cycle: 1:1
Medium: HSL_5G_170505 Medium parameters used: f = 5600 MHz; σ = 4.957 S/m; ε_r = 36.843; ρ = 1000 kg/m^3
Ambient Temperature：23.4 ℃； Liquid Temperature：22.4 ℃

DASY5 Configuration
- Probe: EX3DV4 - SN3976; ConvF(4.98, 4.98, 4.98); Calibrated: 2017/2/21;
- Sensor-Surface: 1.4mm (Mechanical Surface Detection)
- Electronics: DAE4 Sn1424; Calibrated: 2017/2/16
- Phantom: SAM LEFT; Type: QD000P40CD; Serial: TP:1718
- Measurement SW: DASY52, Version 52.8 (8); SEMCAD X Version 14.6.10 (7373)

Pin=100mW/Area Scan (71x71x1): Interpolated grid: dx=1.000 mm, dy=1.000 mm
Maximum value of SAR (interpolated) = 20.2 W/kg

Pin=100mW/Zoom Scan (7x7x7)/Cube 0: Measurement grid: dx=4mm, dy=4mm, dz=1.4mm
Reference Value = 70.81 V/m; Power Drift = -0.01 dB
Peak SAR (extrapolated) = 34.1 W/kg
SAR(1 g) = 8.17 W/kg; SAR(10 g) = 2.27 W/kg
Maximum value of SAR (measured) = 20.8 W/kg

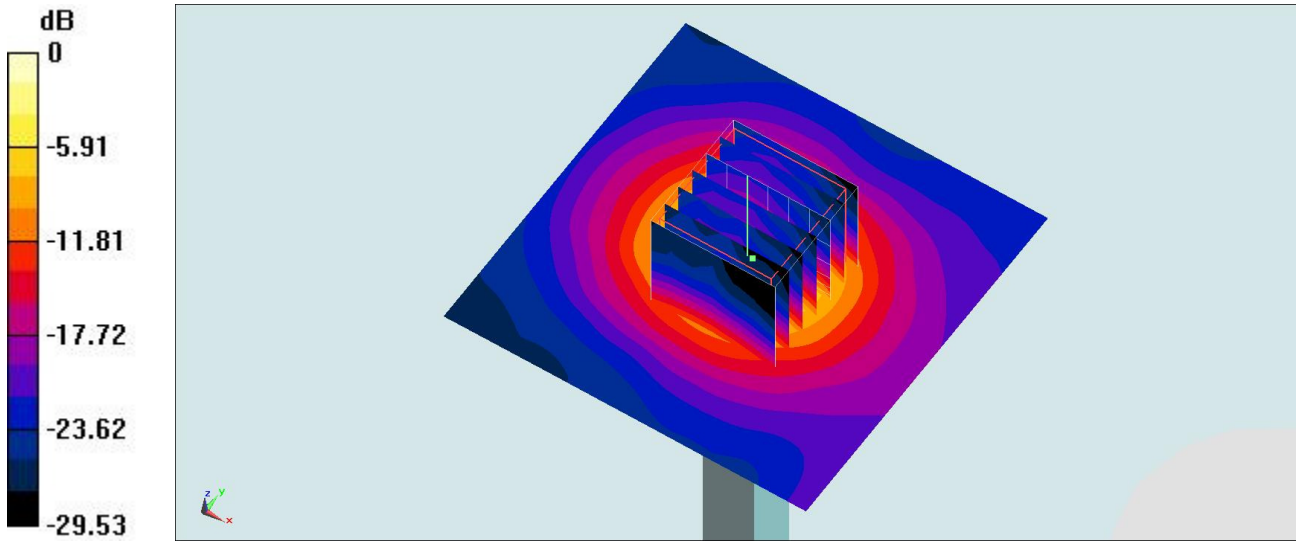

0 dB = 20.8 W/kg = 13.18 dBW/kg

System Check_Body_5600MHz

DUT: D5GHzV2-1128

Communication System: CW; Frequency: 5600 MHz;Duty Cycle: 1:1
Medium: MSL_5G_170507 Medium parameters used: f = 5600 MHz; σ = 6.017 S/m; ε_r = 46.4; ρ = 1000 kg/m^3
Ambient Temperature：23.3 ℃； Liquid Temperature：22.3 ℃

DASY5 Configuration
- Probe: EX3DV4 - SN3976; ConvF(4.03, 4.03, 4.03); Calibrated: 2017/2/21;
- Sensor-Surface: 1.4mm (Mechanical Surface Detection)
- Electronics: DAE4 Sn1424; Calibrated: 2017/2/16
- Phantom: SAM LEFT; Type: QD000P40CD; Serial: TP:1718
- Measurement SW: DASY52, Version 52.8 (8); SEMCAD X Version 14.6.10 (7373)

Pin=100mW/Area Scan (71x71x1): Interpolated grid: dx=1.000 mm, dy=1.000 mm
Maximum value of SAR (interpolated) = 22.5 W/kg

Pin=100mW/Zoom Scan (7x7x7)/Cube 0: Measurement grid: dx=4mm, dy=4mm, dz=1.4mm
Reference Value = 71.87 V/m; Power Drift = -0.02 dB
Peak SAR (extrapolated) = 39.6 W/kg
SAR(1 g) = 7.95 W/kg; SAR(10 g) = 2.1 W/kg
Maximum value of SAR (measured) = 23.1 W/kg

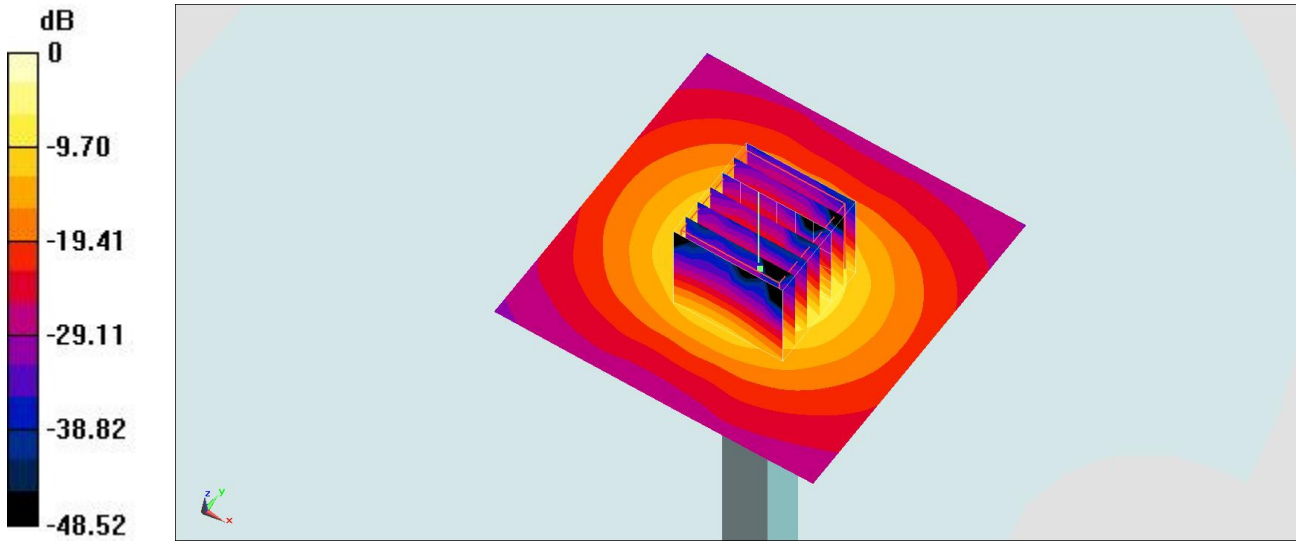

0 dB = 23.1 W/kg = 13.64 dBW/kg

System Check_Head_5750MHz

DUT: D5GHzV2-1128

Communication System: CW; Frequency: 5750 MHz;Duty Cycle: 1:1
Medium: HSL_5G_170505 Medium parameters used: f = 5750 MHz; σ = 5.117 S/m; ε_r = 36.635; ρ = 1000 kg/m^3
Ambient Temperature：23.4 ℃； Liquid Temperature：22.4 ℃

DASY5 Configuration
- Probe: EX3DV4 - SN3976; ConvF(5.16, 5.16, 5.16); Calibrated: 2017/2/21;
- Sensor-Surface: 1.4mm (Mechanical Surface Detection)
- Electronics: DAE4 Sn1424; Calibrated: 2017/2/16
- Phantom: SAM LEFT; Type: QD000P40CD; Serial: TP:1718
- Measurement SW: DASY52, Version 52.8 (8); SEMCAD X Version 14.6.10 (7373)

Pin=100mW/Area Scan (71x71x1): Interpolated grid: dx=1.000 mm, dy=1.000 mm
Maximum value of SAR (interpolated) = 19.0 W/kg

Pin=100mW/Zoom Scan (7x7x7)/Cube 0: Measurement grid: dx=4mm, dy=4mm, dz=1.4mm
Reference Value = 67.02 V/m; Power Drift = 0.03 dB
Peak SAR (extrapolated) = 38.4 W/kg
SAR(1 g) = 8.12 W/kg; SAR(10 g) = 2.23 W/kg
Maximum value of SAR (measured) = 21.4 W/kg

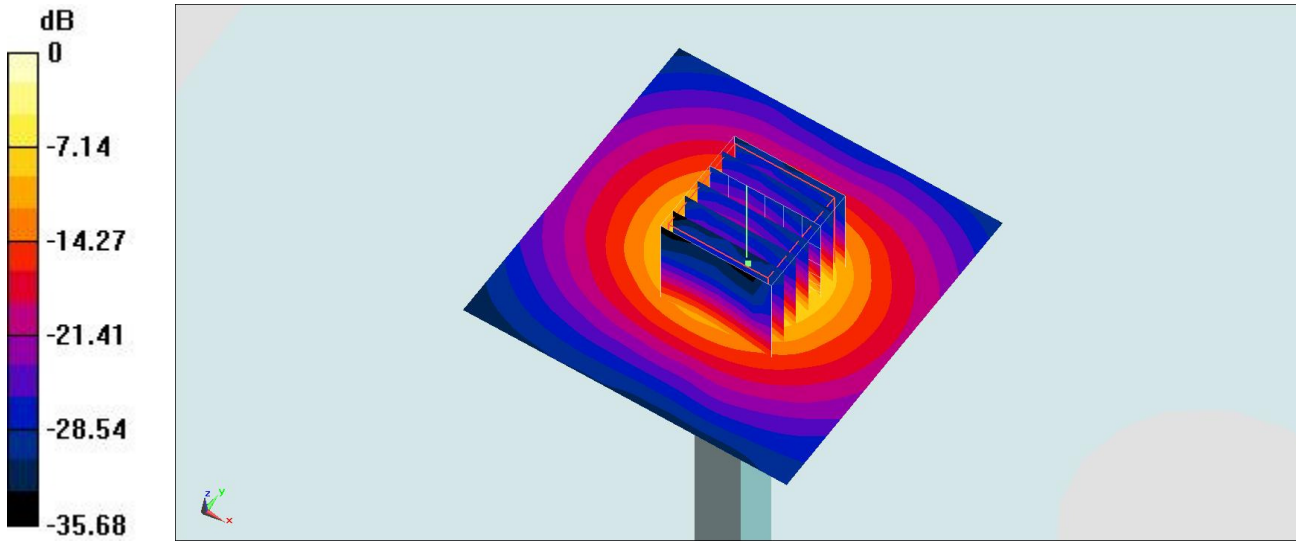

0 dB = 21.4 W/kg = 13.30 dBW/kg

System Check_Body_5750MHz

DUT: D5GHzV2-1128

Communication System: CW; Frequency: 5750 MHz;Duty Cycle: 1:1
Medium: MSL_5G_170507 Medium parameters used: f = 5750 MHz; σ = 6.229 S/m; ε_r = 46.166; ρ = 1000 kg/m^3
Ambient Temperature：23.3 ℃； Liquid Temperature：22.3 ℃

DASY5 Configuration
- Probe: EX3DV4 - SN3976; ConvF(4.33, 4.33, 4.33); Calibrated: 2017/2/21;
- Sensor-Surface: 1.4mm (Mechanical Surface Detection)
- Electronics: DAE4 Sn1424; Calibrated: 2017/2/16
- Phantom: SAM LEFT; Type: QD000P40CD; Serial: TP:1718
- Measurement SW: DASY52, Version 52.8 (8); SEMCAD X Version 14.6.10 (7373)

Pin=100mW/Area Scan (71x71x1): Interpolated grid: dx=1.000 mm, dy=1.000 mm
Maximum value of SAR (interpolated) = 20.5 W/kg

Pin=100mW/Zoom Scan (7x7x7)/Cube 0: Measurement grid: dx=4mm, dy=4mm, dz=1.4mm
Reference Value = 67.94 V/m; Power Drift = -0.14 dB
Peak SAR (extrapolated) = 37.9 W/kg
SAR(1 g) = 7.53 W/kg; SAR(10 g) = 1.96 W/kg
Maximum value of SAR (measured) = 21.6 W/kg

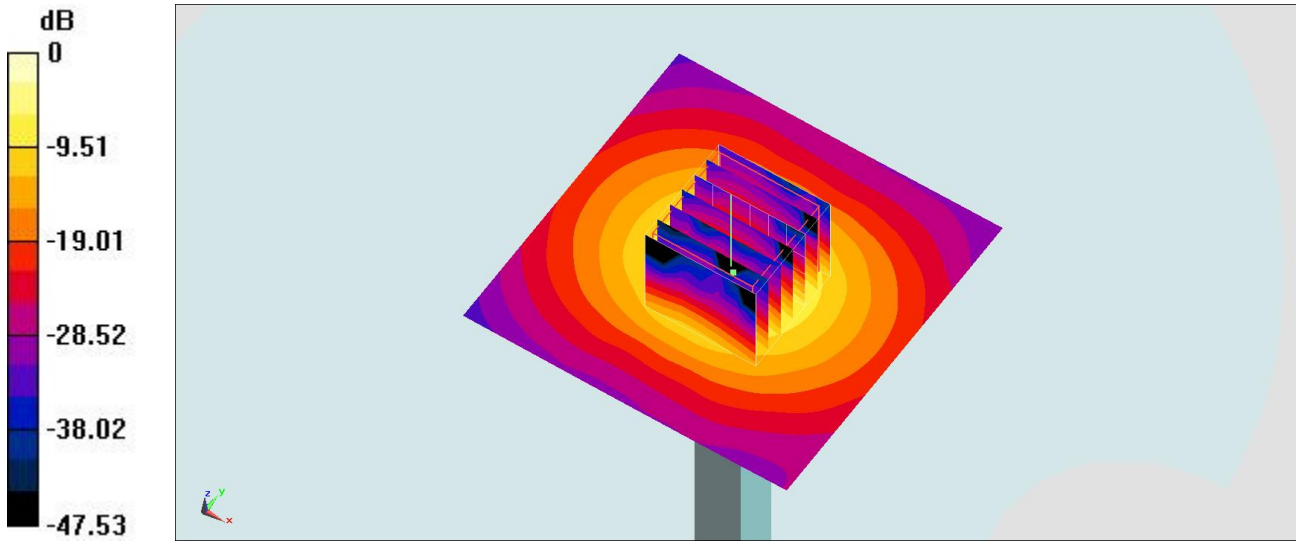

0 dB = 21.6 W/kg = 13.34 dBW/kg