System Check_Head_750MHz

DUT: D750V3-1012

Communication System: CW ; Frequency: 750 MHz;Duty Cycle: 1:1
Medium: HSL_750_170425 Medium parameters used: f = 750 MHz; σ = 0.902 S/m; ε_r = 40.709; ρ = 1000 kg/m^3
Ambient Temperature：23.4 ℃; Liquid Temperature：22.4 ℃

DASY5 Configuration:
- Probe: EX3DV4 - SN3931; ConvF(10.68, 10.68, 10.68); Calibrated: 2016/10/3;
- Sensor-Surface: 1.4mm (Mechanical Surface Detection)
- Electronics: DAE3 Sn577; Calibrated: 2016/9/28
- Phantom: SAM-Right; Type: SAM; Serial: TP-1303
- Measurement SW: DASY52, Version 52.8 (8);SEMCAD X Version 14.6.10 (7373)

Pin=250mW/Area Scan (61x61x1): Interpolated grid: dx=1.500 mm, dy=1.500 mm
Maximum value of SAR (interpolated) = 2.94 W/kg

Pin=250mW/Zoom Scan (5x5x7)/Cube 0: Measurement grid: dx=8mm, dy=8mm, dz=5mm
Reference Value = 60.07 V/m; Power Drift = -0.02 dB
Peak SAR (extrapolated) = 3.16 W/kg
SAR(1 g) = 2.15 W/kg; SAR(10 g) = 1.44 W/kg
Maximum value of SAR (measured) = 2.80 W/kg

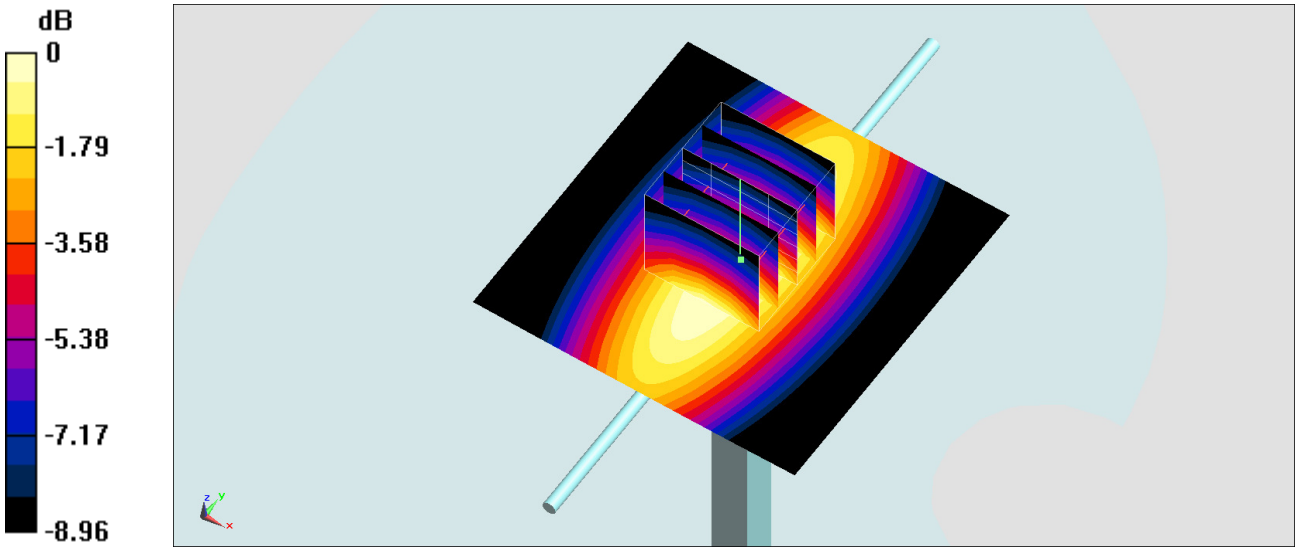

0 dB = 2.80 W/kg = 4.47 dBW/kg

System Check_Body_750MHz

DUT: D750V3-1012

Communication System: CW ; Frequency: 750 MHz;Duty Cycle: 1:1
Medium: MSL_750_170502 Medium parameters used: f = 750 MHz; σ = 0.957 S/m; ε_r = 55.174; ρ = 1000 kg/m^3
Ambient Temperature：23.6 ℃； Liquid Temperature：22.6 ℃

DASY5 Configuration
- Probe: EX3DV4 - SN3976; ConvF(10.68, 10.68, 10.68); Calibrated: 2017/2/21;
- Sensor-Surface: 1.4mm (Mechanical Surface Detection)
- Electronics: DAE4 Sn1424; Calibrated: 2017/2/16
- Phantom: SAM LEFT; Type: QD000P40CD; Serial: TP:1718
- Measurement SW: DASY52, Version 52.8 (8); SEMCAD X Version 14.6.10 (7373)

Pin=250mW/Area Scan (61x61x1): Interpolated grid: dx=1.500 mm, dy=1.500 mm
Maximum value of SAR (interpolated) = 2.79 W/kg

Pin=250mW/Zoom Scan (5x5x7)/Cube 0: Measurement grid: dx=8mm, dy=8mm, dz=5mm
Reference Value = 54.84 V/m; Power Drift = -0.01 dB
Peak SAR (extrapolated) = 3.17 W/kg
SAR(1 g) = 2.25 W/kg; SAR(10 g) = 1.54 W/kg
Maximum value of SAR (measured) = 2.77 W/kg

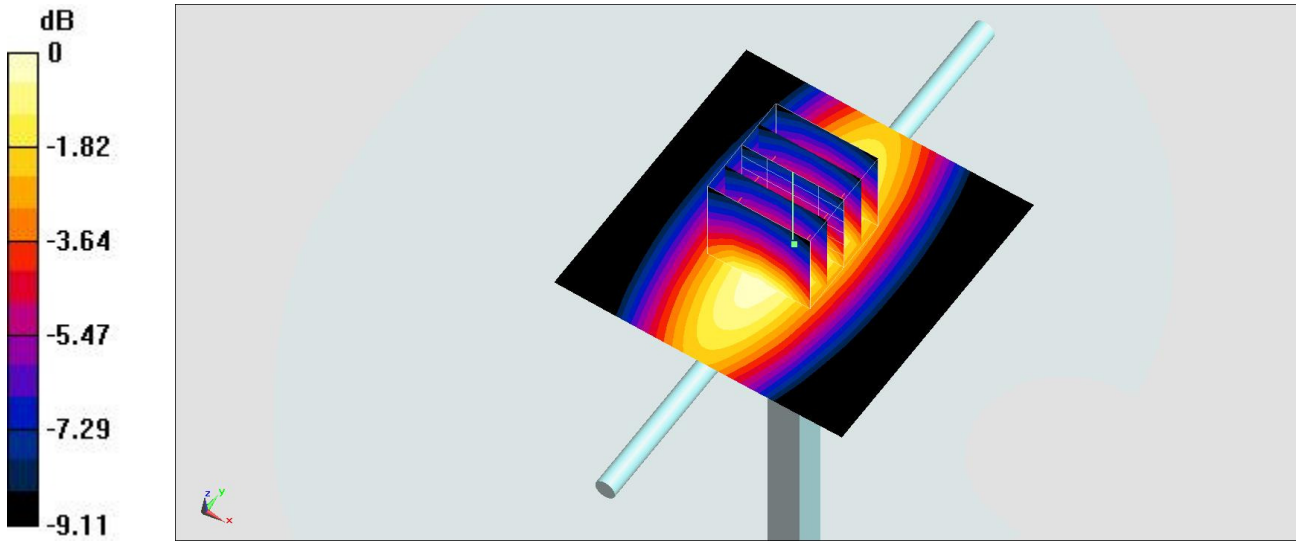

0 dB = 2.77 W/kg = 4.42 dBW/kg

System Check_Head_835MHz

DUT: D835V2-499

Communication System: CW; Frequency: 835 MHz;Duty Cycle: 1:1
Medium: HSL_850_170424 Medium parameters used: f = 835 MHz; σ = 0.895 S/m; ε_r = 42.932; ρ = 1000 kg/m^3
Ambient Temperature：23.4 ℃; Liquid Temperature：22.4 ℃

DASY5 Configuration:
- Probe: EX3DV4 - SN3931; ConvF(10.35, 10.35, 10.35); Calibrated: 2016/10/3;
- Sensor-Surface: 1.4mm (Mechanical Surface Detection)
- Electronics: DAE3 Sn577; Calibrated: 2016/9/28
- Phantom: SAM-Right; Type: SAM; Serial: TP-1303
- Measurement SW: DASY52, Version 52.8 (8);SEMCAD X Version 14.6.10 (7373)

Pin=250mW/Area Scan (61x61x1): Interpolated grid: dx=1.500 mm, dy=1.500 mm
Maximum value of SAR (interpolated) = 3.21 W/kg

Pin=250mW/Zoom Scan (5x5x7)/Cube 0: Measurement grid: dx=8mm, dy=8mm, dz=5mm
Reference Value = 62.03 V/m; Power Drift = -0.06 dB
Peak SAR (extrapolated) = 3.38 W/kg
SAR(1 g) = 2.29 W/kg; SAR(10 g) = 1.53 W/kg
Maximum value of SAR (measured) = 3.01 W/kg

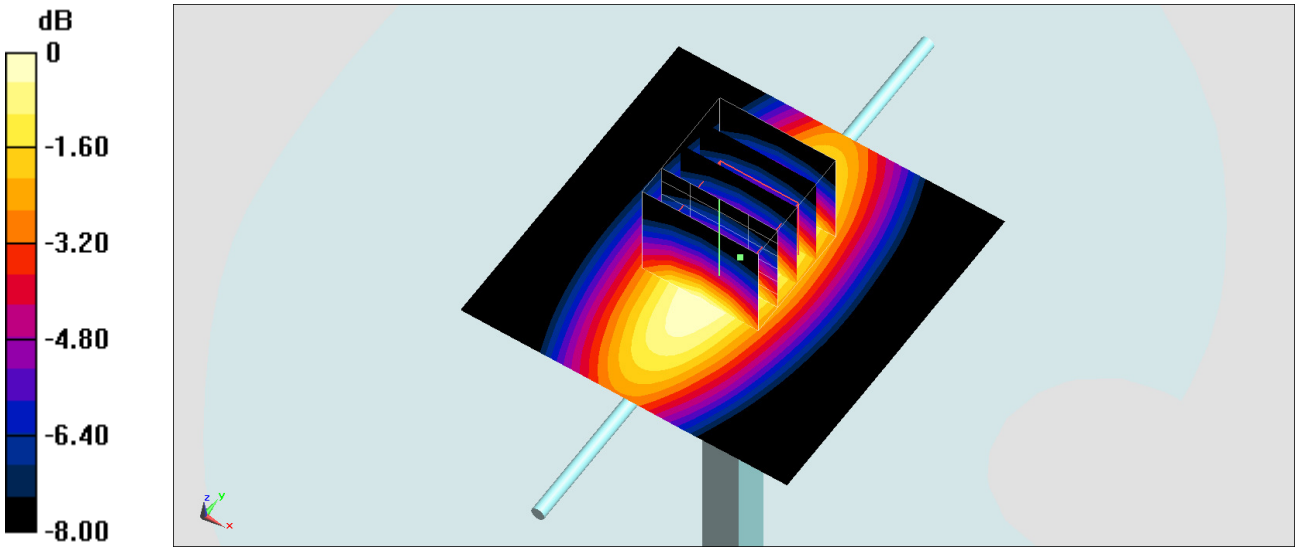

0 dB = 3.01 W/kg = 4.79 dBW/kg

System Check_Body_835MHz

DUT: D835V2-499

Communication System: CW ; Frequency: 835 MHz;Duty Cycle: 1:1
Medium: MSL_850_170430 Medium parameters used: f = 835 MHz; σ = 0.946 S/m; ε_r = 54.473; ρ = 1000 kg/m^3
Ambient Temperature：23.6 ℃； Liquid Temperature：22.6 ℃

DASY5 Configuration
- Probe: EX3DV4 - SN3976; ConvF(10.41, 10.41, 10.41); Calibrated: 2017/2/21;
- Sensor-Surface: 1.4mm (Mechanical Surface Detection)
- Electronics: DAE4 Sn1424; Calibrated: 2017/2/16
- Phantom: SAM LEFT; Type: QD000P40CD; Serial: TP:1718
- Measurement SW: DASY52, Version 52.8 (8); SEMCAD X Version 14.6.10 (7373)

Pin=250mW/Area Scan (61x61x1): Interpolated grid: dx=1.500 mm, dy=1.500 mm
Maximum value of SAR (interpolated) = 3.16 W/kg

Pin=250mW/Zoom Scan (5x5x7)/Cube 0: Measurement grid: dx=8mm, dy=8mm, dz=5mm
Reference Value = 60.02 V/m; Power Drift = -0.01 dB
Peak SAR (extrapolated) = 3.59 W/kg
SAR(1 g) = 2.36 W/kg; SAR(10 g) = 1.56 W/kg
Maximum value of SAR (measured) = 3.16 W/kg

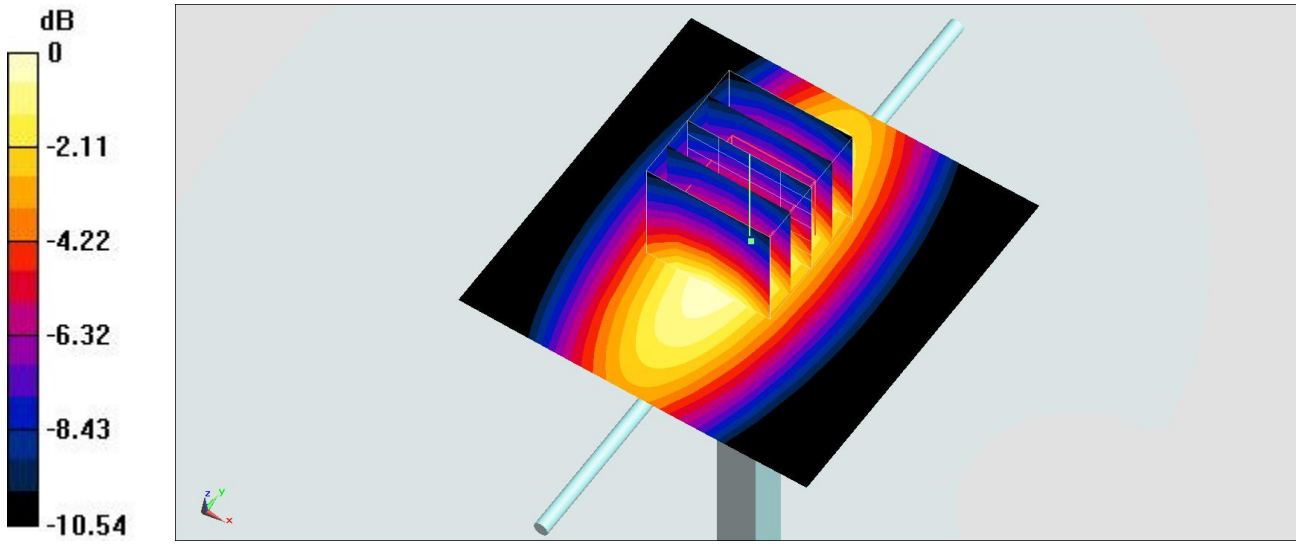

0 dB = 3.16 W/kg = 5.00 dBW/kg

System Check_Body_835MHz

DUT: D835V2-499

Communication System: CW; Frequency: 835 MHz;Duty Cycle: 1:1
Medium: MSL_850_170503 Medium parameters used: f = 835 MHz; σ = 0.975 S/m; ε_r = 57.194; ρ = 1000 kg/m^3
Ambient Temperature：23.6 ℃； Liquid Temperature：22.6 ℃

DASY5 Configuration
- Probe: EX3DV4 - SN3976; ConvF(10.41, 10.41, 10.41); Calibrated: 2017/2/21;
- Sensor-Surface: 1.4mm (Mechanical Surface Detection)
- Electronics: DAE4 Sn1424; Calibrated: 2017/2/16
- Phantom: SAM LEFT; Type: QD000P40CD; Serial: TP:1718
- Measurement SW: DASY52, Version 52.8 (8); SEMCAD X Version 14.6.10 (7373)

Pin=250mW/Area Scan (61x61x1): Interpolated grid: dx=1.500 mm, dy=1.500 mm
Maximum value of SAR (interpolated) = 3.09 W/kg

Pin=250mW/Zoom Scan (5x5x7)/Cube 0: Measurement grid: dx=8mm, dy=8mm, dz=5mm
Reference Value = 57.23 V/m; Power Drift = -0.02 dB
Peak SAR (extrapolated) = 3.63 W/kg
SAR(1 g) = 2.48 W/kg; SAR(10 g) = 1.65 W/kg
Maximum value of SAR (measured) = 3.10 W/kg

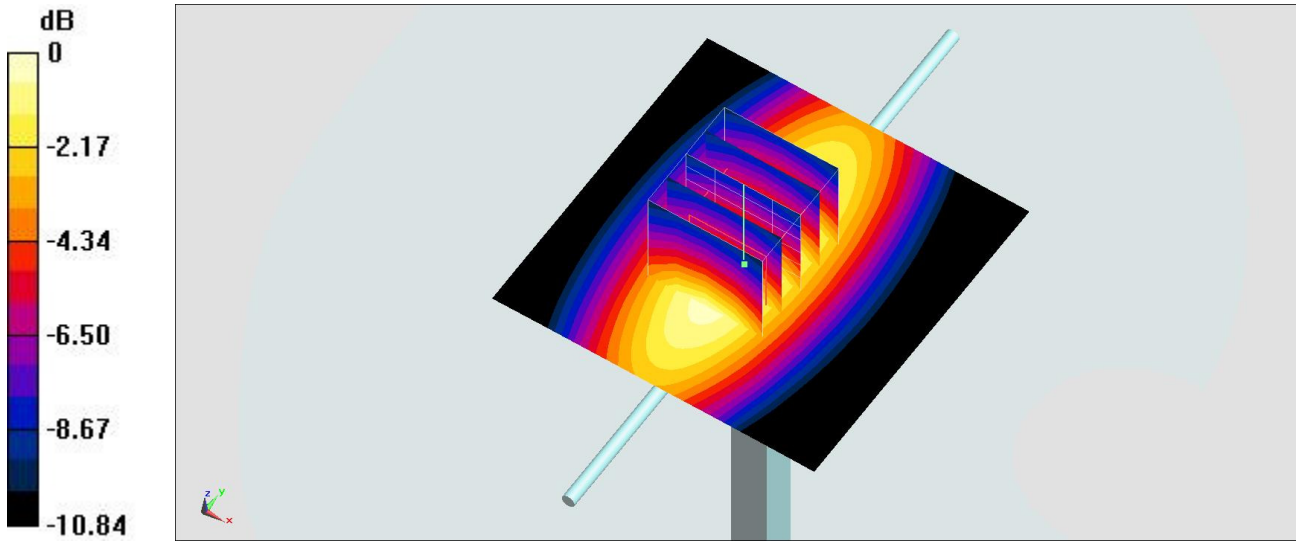

0 dB = 3.10 W/kg = 4.91 dBW/kg

Test Laboratory: Sporton International Inc. SAR/HAC Testing Lab Date: 2017/4/14

System Check_Head_1750MHz

DUT: D1750V2-1068

Communication System: CW; Frequency: 1750 MHz;Duty Cycle: 1:1
Medium: HSL_1750_170414 Medium parameters used: f = 1750 MHz; σ = 1.39 mho/m; ε_r = 41.7; ρ = 1000 kg/m^3
Ambient Temperature：23.5 ℃; Liquid Temperature：22.5 ℃

DASY4 Configuration:
- Probe: EX3DV4 - SN3925; ConvF(8.57, 8.57, 8.57); Calibrated: 2016/5/26
- Sensor-Surface: 1.4mm (Mechanical Surface Detection)
- Electronics: DAE3 Sn495; Calibrated: 2016/5/27
- Phantom: SAM_Right; Type: QD000P40CD; Serial: TP:1815
- ;Postprocessing SW: SEMCAD, V1.8 Build 159

Pin=250mW/Area Scan (61x61x1): Measurement grid: dx=15mm, dy=15mm
Maximum value of SAR (interpolated) = 15.0 mW/g

Pin=250mW/Zoom Scan (5x5x7)/Cube 0: Measurement grid: dx=8mm, dy=8mm, dz=5mm
Reference Value = 104.5 V/m; Power Drift = 0.034 dB
Peak SAR (extrapolated) = 17.3 W/kg
SAR(1 g) = 9.34 mW/g; SAR(10 g) = 4.89 mW/g
Maximum value of SAR (measured) = 14.4 mW/g

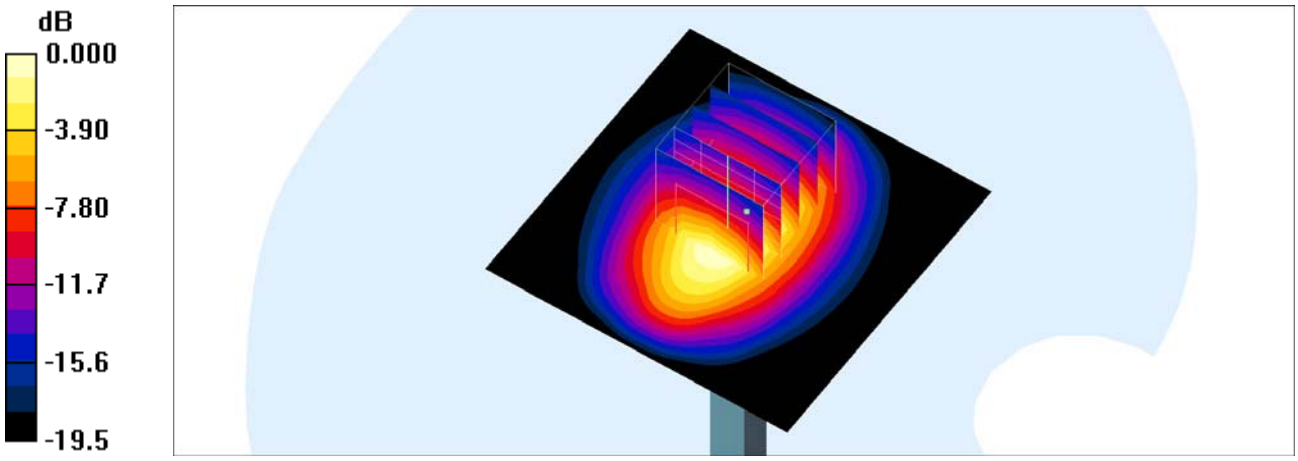

0 dB = 14.4mW/g

System Check_Head_1750MHz

DUT: D1750V2-1068

Communication System: CW; Frequency: 1750 MHz;Duty Cycle: 1:1
Medium: HSL_1750_170428 Medium parameters used: f = 1750 MHz; σ = 1.375 S/m; ε_r = 41.829; ρ = 1000 kg/m^3
Ambient Temperature：23.5 ℃； Liquid Temperature：22.5 ℃

DASY5 Configuration
- Probe: EX3DV4 - SN3976; ConvF(8.93, 8.93, 8.93); Calibrated: 2017/2/21;
- Sensor-Surface: 1.4mm (Mechanical Surface Detection)
- Electronics: DAE4 Sn1424; Calibrated: 2017/2/16
- Phantom: SAM LEFT; Type: QD000P40CD; Serial: TP:1718
- Measurement SW: DASY52, Version 52.8 (8); SEMCAD X Version 14.6.10 (7373)

Pin=250mW/Area Scan (61x61x1): Interpolated grid: dx=1.500 mm, dy=1.500 mm
Maximum value of SAR (interpolated) = 13.5 W/kg

Pin=250mW/Zoom Scan (5x5x7)/Cube 0: Measurement grid: dx=8mm, dy=8mm, dz=5mm
Reference Value = 101.6 V/m; Power Drift = 0.15 dB
Peak SAR (extrapolated) = 17.2 W/kg
SAR(1 g) = 9.36 W/kg; SAR(10 g) = 5 W/kg
Maximum value of SAR (measured) = 14.3 W/kg

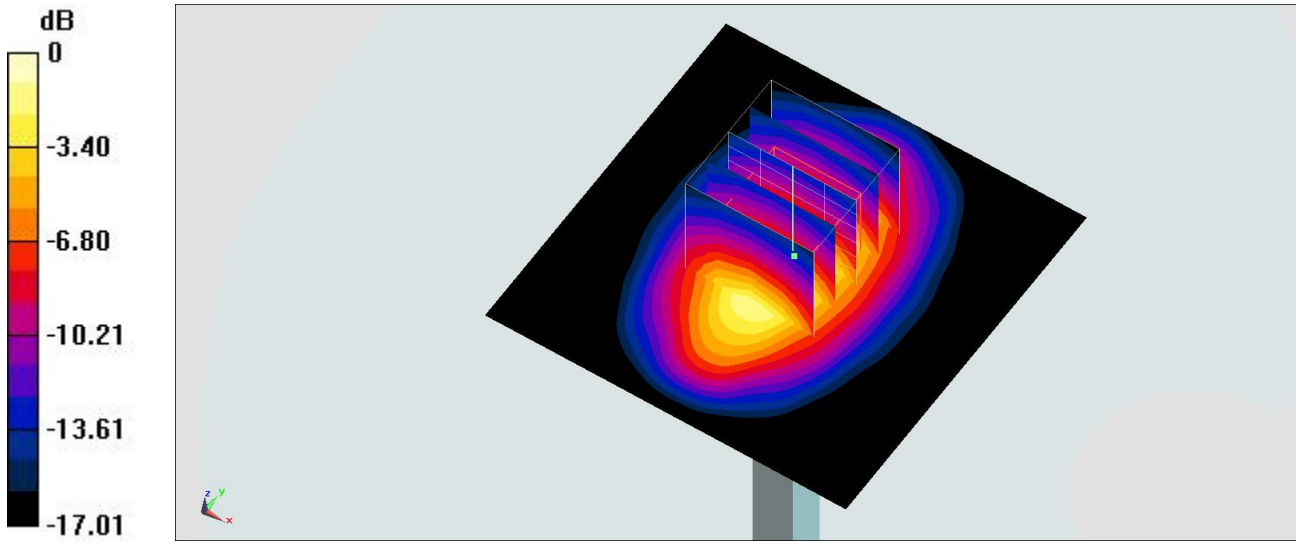

0 dB = 14.3 W/kg = 11.55 dBW/kg

System Check_Body_1750MHz

DUT: D1750V2-1068

Communication System: CW; Frequency: 1750 MHz;Duty Cycle: 1:1
Medium: MSL1750_170420 Medium parameters used: f = 1750 MHz; σ = 1.527 S/m; ε_r = 54.161; ρ = 1000 kg/m^3
Ambient Temperature：23.5 ℃; Liquid Temperature：22.5 ℃

DASY5 Configuration:
- Probe: EX3DV4 - SN3976; ConvF(8.57, 8.57, 8.57); Calibrated: 2017/2/21;
- Sensor-Surface: 1.4mm (Mechanical Surface Detection)
- Electronics: DAE4 Sn1424; Calibrated: 2017/2/16
- Phantom: SAM-Right; Type: SAM; Serial: TP-1303
- Measurement SW: DASY52, Version 52.8 (8);SEMCAD X Version 14.6.10 (7373)

Pin=250mW/Area Scan (61x61x1): Interpolated grid: dx=1.500 mm, dy=1.500 mm
Maximum value of SAR (interpolated) = 14.6 W/kg

Pin=250mW/Zoom Scan (5x5x7)/Cube 0: Measurement grid: dx=8mm, dy=8mm, dz=5mm
Reference Value = 101.2 V/m; Power Drift = -0.00 dB
Peak SAR (extrapolated) = 17.1 W/kg
SAR(1 g) = 9.61 W/kg; SAR(10 g) = 5.15 W/kg
Maximum value of SAR (measured) = 14.6 W/kg

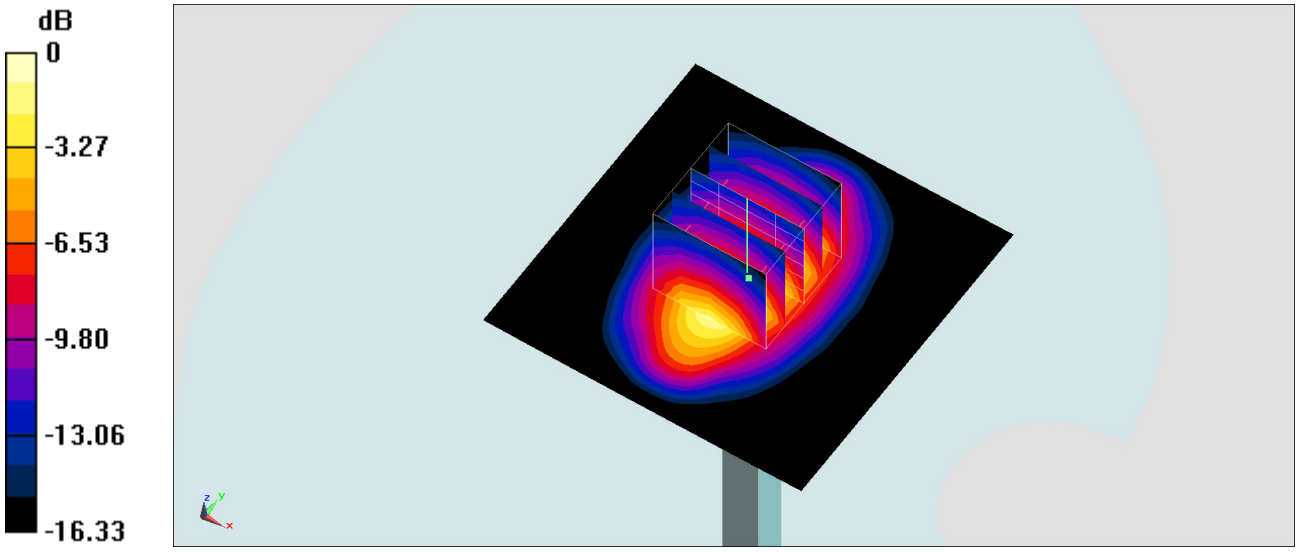

0 dB = 14.6 W/kg = 11.64 dBW/kg

System Check_Body_1750MHz

DUT: D1750V2-1068

Communication System: CW ; Frequency: 1750 MHz;Duty Cycle: 1:1
Medium: MSL_1750_170427 Medium parameters used: f = 1750 MHz; σ = 1.492 S/m; ε_r = 52.638; ρ = 1000 kg/m^3
Ambient Temperature：23.2 ℃; Liquid Temperature：22.2 ℃

DASY5 Configuration:
- Probe: EX3DV4 - SN3931; ConvF(8.45, 8.45, 8.45); Calibrated: 2016/10/3;
- Sensor-Surface: 1.4mm (Mechanical Surface Detection)
- Electronics: DAE3 Sn577; Calibrated: 2016/9/28
- Phantom: SAM-Right; Type: SAM; Serial: TP-1303
- Measurement SW: DASY52, Version 52.8 (8);SEMCAD X Version 14.6.10 (7373)

Pin=250mW/Area Scan (61x61x1): Interpolated grid: dx=1.500 mm, dy=1.500 mm
Maximum value of SAR (interpolated) = 14.2 W/kg

Pin=250mW/Zoom Scan (5x5x7)/Cube 0: Measurement grid: dx=8mm, dy=8mm, dz=5mm
Reference Value = 99.87 V/m; Power Drift = 0.09 dB
Peak SAR (extrapolated) = 16.9 W/kg
SAR(1 g) = 9.63 W/kg; SAR(10 g) = 5.21 W/kg
Maximum value of SAR (measured) = 14.5 W/kg

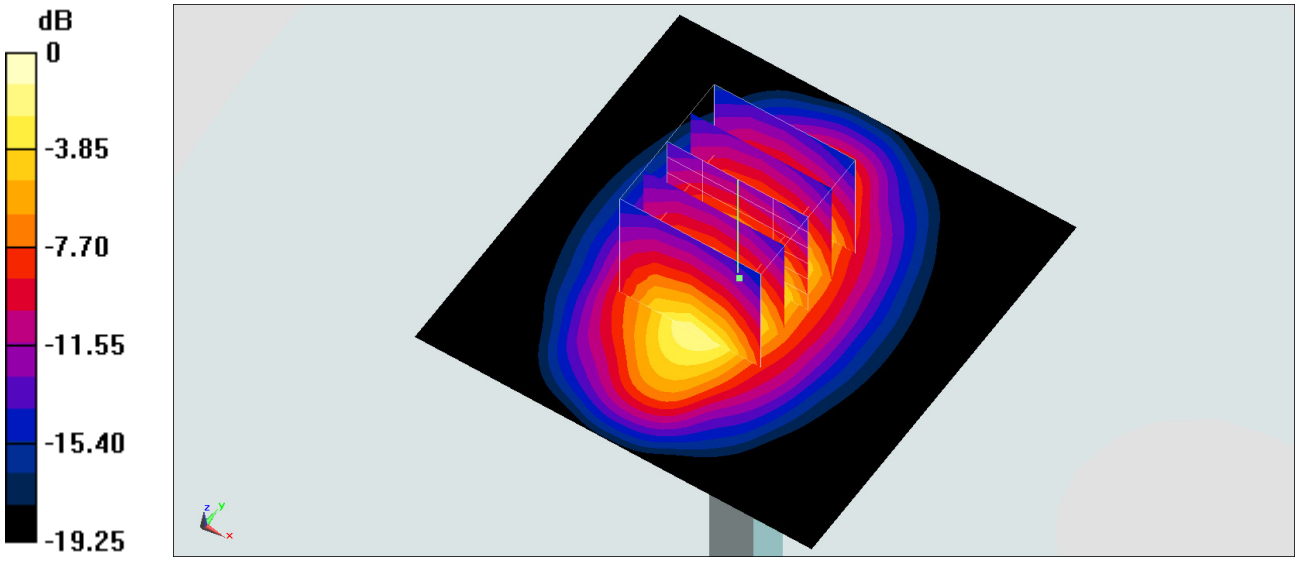

0 dB = 14.5 W/kg = 11.61 dBW/kg

Test Laboratory: Sporton International Inc. SAR/HAC Testing Lab Date: 2017/4/12

System Check_Head_1900MHz

DUT: D1900V2-5d041

Communication System: CW; Frequency: 1900 MHz;Duty Cycle: 1:1
Medium: HSL_1900_170412 Medium parameters used: f = 1900 MHz; σ = 1.41 mho/m; ε_r = 41.6; ρ = 1000 kg/m^3
Ambient Temperature：23.5 ℃; Liquid Temperature：22.5 ℃

DASY4 Configuration:
- Probe: EX3DV4 - SN3925; ConvF(8.3, 8.3, 8.3); Calibrated: 2016/5/26
- Sensor-Surface: 1.4mm (Mechanical Surface Detection)
- Electronics: DAE3 Sn495; Calibrated: 2016/5/27
- Phantom: SAM_Right; Type: QD000P40CD; Serial: TP:1815
- ;Postprocessing SW: SEMCAD, V1.8 Build 159

Pin=250mW/Area Scan (61x61x1): Measurement grid: dx=15mm, dy=15mm
Maximum value of SAR (interpolated) = 16.3 mW/g

Pin=250mW/Zoom Scan (5x5x7)/Cube 0: Measurement grid: dx=8mm, dy=8mm, dz=5mm
Reference Value = 109.2 V/m; Power Drift = 0.045 dB
Peak SAR (extrapolated) = 18.9 W/kg
SAR(1 g) = 9.89 mW/g; SAR(10 g) = 5.09 mW/g
Maximum value of SAR (measured) = 15.2 mW/g

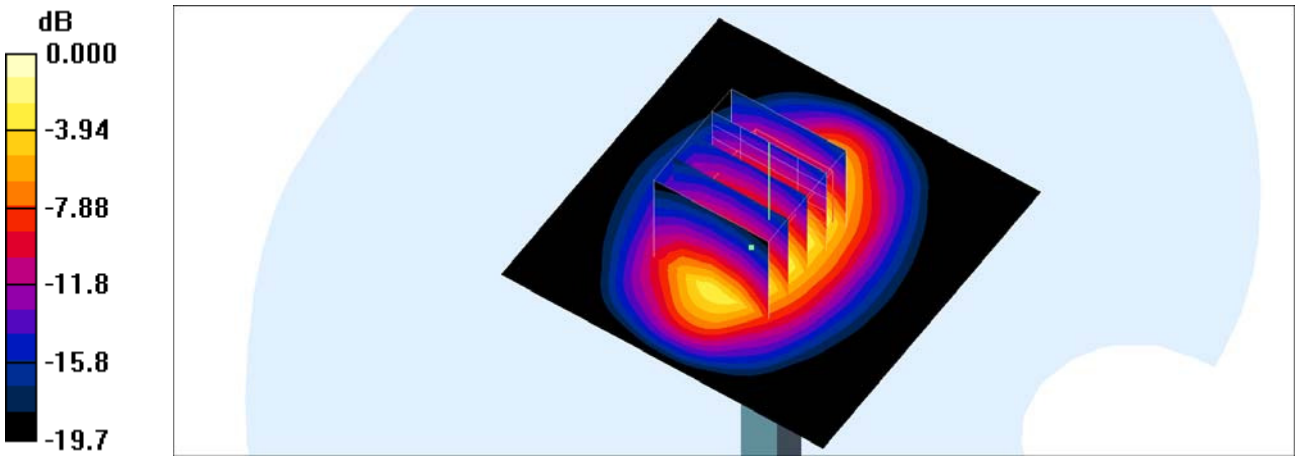

0 dB = 15.2mW/g

System Check_Head_1900MHz

DUT: D1900V2-5d041

Communication System: CW; Frequency: 1900 MHz;Duty Cycle: 1:1
Medium: HSL_1900_170428 Medium parameters used: f = 1900 MHz; σ = 1.385 S/m; ε_r = 38.747; ρ = 1000 kg/m^3
Ambient Temperature：23.5 ℃； Liquid Temperature：22.5 ℃

DASY5 Configuration
- Probe: EX3DV4 - SN3976; ConvF(8.62, 8.62, 8.62); Calibrated: 2017/2/21;
- Sensor-Surface: 1.4mm (Mechanical Surface Detection)
- Electronics: DAE4 Sn1424; Calibrated: 2017/2/16
- Phantom: SAM LEFT; Type: QD000P40CD; Serial: TP:1718
- Measurement SW: DASY52, Version 52.8 (8); SEMCAD X Version 14.6.10 (7373)

Pin=250mW/Area Scan (61x61x1): Interpolated grid: dx=1.500 mm, dy=1.500 mm
Maximum value of SAR (interpolated) = 14.4 W/kg

Pin=250mW/Zoom Scan (5x5x7)/Cube 0: Measurement grid: dx=8mm, dy=8mm, dz=5mm
Reference Value = 105.9 V/m; Power Drift = -0.05 dB
Peak SAR (extrapolated) = 17.0 W/kg
SAR(1 g) = 9.32 W/kg; SAR(10 g) = 4.89 W/kg
Maximum value of SAR (measured) = 14.0 W/kg

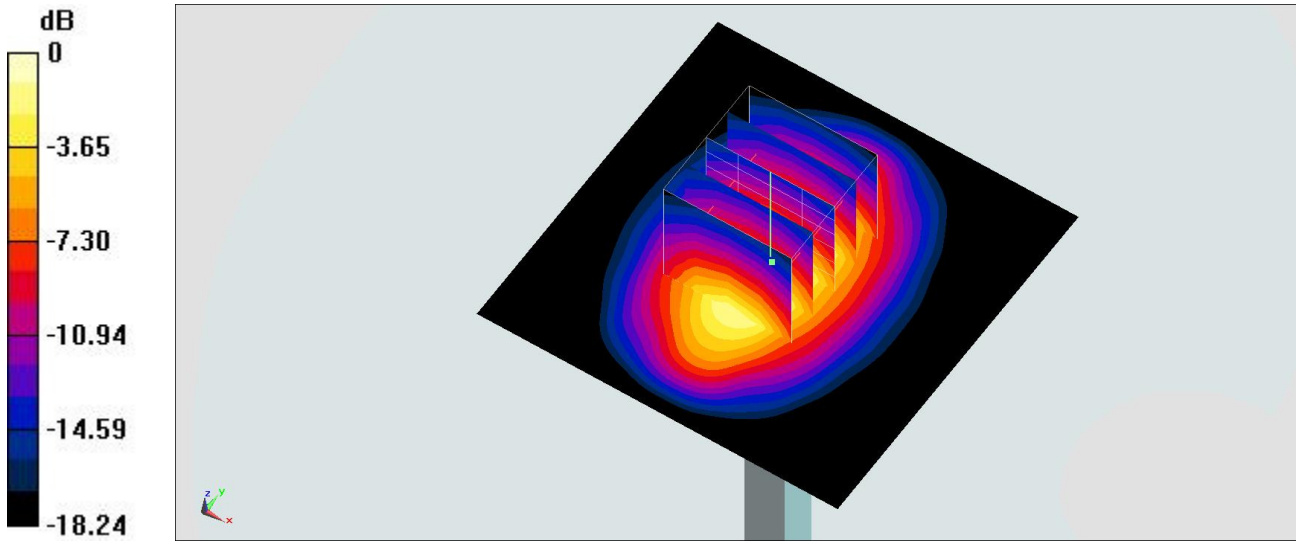

0 dB = 14.0 W/kg = 11.46 dBW/kg

System Check_Body_1900MHz

DUT: **D**1900V2-5d04**1**

Communication System: CW ; Frequency: 1900 MHz;Duty Cycle: 1:1
Medium: MSL_1900_170418 Medium parameters used: f = 1900 MHz; σ = 1.533 S/m; ε_r = 53.363; ρ = 1000 kg/m^3
Ambient Temperature：23.5 ℃; Liquid Temperature：22.5 ℃

DASY5 Configuration:
- Probe: EX3DV4 - SN3976; ConvF(8.31, 8.31, 8.31); Calibrated: 2017/2/21;
- Sensor-Surface: 1.4mm (Mechanical Surface Detection)
- Electronics: DAE4 Sn1424; Calibrated: 2017/2/16
- Phantom: SAM-Right; Type: SAM; Serial: TP-1303
- Measurement SW: DASY52, Version 52.8 (8);SEMCAD X Version 14.6.10 (7373)

Pin=250mW/Area Scan (61x61x1): Interpolated grid: dx=1.500 mm, dy=1.500 mm
Maximum value of SAR (interpolated) = 15.4 W/kg

Pin=250mW/Zoom Scan (5x5x7)/Cube 0: Measurement grid: dx=8mm, dy=8mm, dz=5mm
Reference Value = 103.7 V/m; Power Drift = -0.04 dB
Peak SAR (extrapolated) = 18.1 W/kg
SAR(1 g) = 10 W/kg; SAR(10 g) = 5.27 W/kg
Maximum value of SAR (measured) = 15.4 W/kg

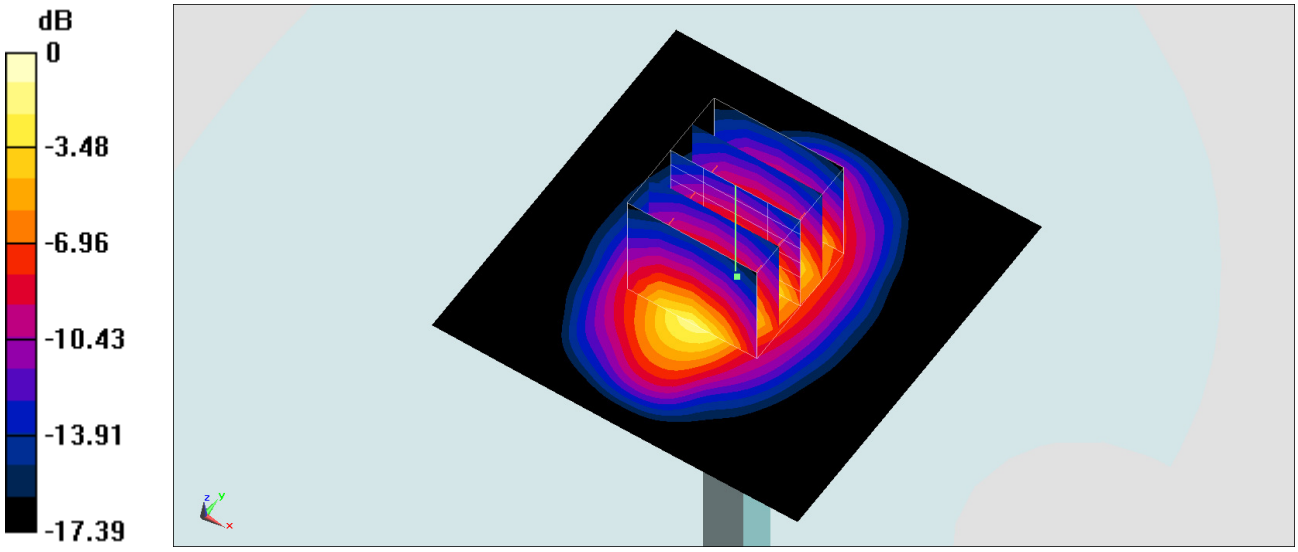

0 dB = 15.4 W/kg = 11.88 dBW/kg

System Check_Body_1900MHz

DUT: D1900V2-5d041

Communication System: CW; Frequency: 1900 MHz;Duty Cycle: 1:1
Medium: MSL_1900_170420 Medium parameters used: f = 1900 MHz; σ = 1.555 S/m; ε_r = 54.164; ρ = 1000 kg/m^3
Ambient Temperature：23.5 ℃; Liquid Temperature：22.5 ℃

DASY5 Configuration:
- Probe: EX3DV4 - SN3976; ConvF(8.31, 8.31, 8.31); Calibrated: 2017/2/21;
- Sensor-Surface: 1.4mm (Mechanical Surface Detection)
- Electronics: DAE4 Sn1424; Calibrated: 2017/2/16
- Phantom: SAM-Right; Type: SAM; Serial: TP-1303
- Measurement SW: DASY52, Version 52.8 (8);SEMCAD X Version 14.6.10 (7373)

Pin=250mW/Area Scan (61x61x1): Interpolated grid: dx=1.500 mm, dy=1.500 mm
Maximum value of SAR (interpolated) = 16.2 W/kg

Pin=250mW/Zoom Scan (5x5x7)/Cube **0:** Measurement grid: dx=8mm, dy=8mm, dz=5mm
Reference Value = 106.1 V/m; Power Drift = 0.00 dB
Peak SAR (extrapolated) = 19.1 W/kg
SAR(**1** g) = **10.5** W/kg; SAR(**10 g**) = 5.56 W/kg
Maximum value of SAR (measured) = 16.2 W/kg

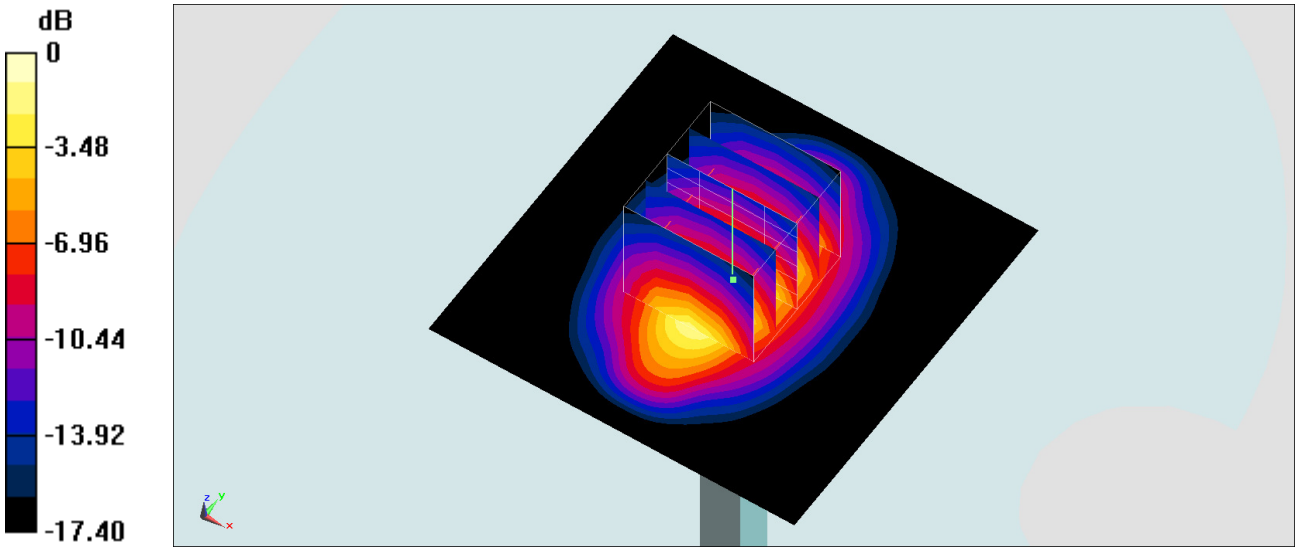

0 dB = 16.2 W/kg = 12.10 dBW/kg

System Check_Head_1900MHz

DUT: D1900V2-5d041

Communication System: CW; Frequency: 1900 MHz;Duty Cycle: 1:1
Medium: HSL_1900_170428 Medium parameters used: f = 1900 MHz; σ = 1.432 S/m; ε_r = 41.123; ρ = 1000 kg/m^3
Ambient Temperature：23.5 ℃； Liquid Temperature：22.5 ℃

DASY5 Configuration
- Probe: EX3DV4 - SN3976; ConvF(8.62, 8.62, 8.62); Calibrated: 2017/2/21;
- Sensor-Surface: 1.4mm (Mechanical Surface Detection)
- Electronics: DAE4 Sn1424; Calibrated: 2017/2/16
- Phantom: SAM_RIGHT; Type: QD000P40CD; Serial: 1719
- Measurement SW: DASY52, Version 52.8 (8); SEMCAD X Version 14.6.10 (7373)

Pin=250mW/Area Scan (61x61x1): Interpolated grid: dx=1.500 mm, dy=1.500 mm
Maximum value of SAR (interpolated) = 17.0 W/kg

Pin=250mW/Zoom Scan (5x5x7)/Cube 0: Measurement grid: dx=8mm, dy=8mm, dz=5mm
Reference Value = 109.8 V/m; Power Drift = -0.06 dB
Peak SAR (extrapolated) = 19.8 W/kg
SAR(1 g) = 10.5 W/kg; SAR(10 g) = 5.41 W/kg
Maximum value of SAR (measured) = 16.3 W/kg

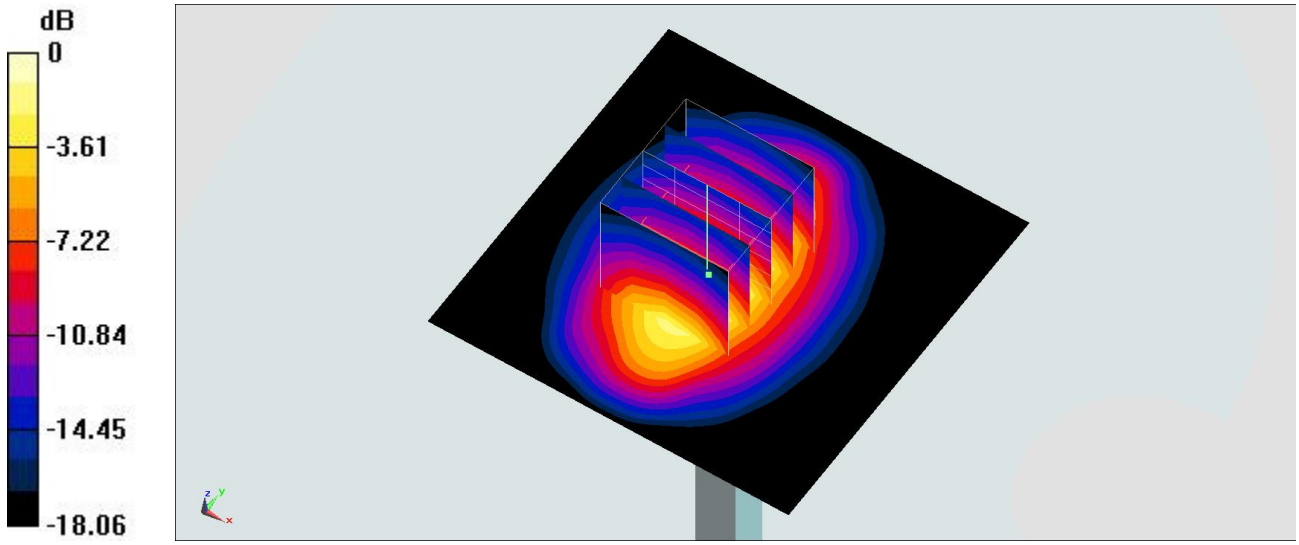

0 dB = 16.3 W/kg = 12.12 dBW/kg

System Check_Body_1900MHz

DUT: D1900V2-5d041

Communication System: CW; Frequency: 1900 MHz;Duty Cycle: 1:1
Medium: MSL_1900_170429 Medium parameters used: f = 1900 MHz; σ = 1.551 S/m; ε_r = 55.309; ρ = 1000 kg/m^3
Ambient Temperature：23.5 ℃； Liquid Temperature：22.5 ℃

DASY5 Configuration
- Probe: EX3DV4 - SN3976; ConvF(8.31, 8.31, 8.31); Calibrated: 2017/2/21;
- Sensor-Surface: 1.4mm (Mechanical Surface Detection)
- Electronics: DAE4 Sn1424; Calibrated: 2017/2/16
- Phantom: SAM LEFT; Type: QD000P40CD; Serial: TP:1718
- Measurement SW: DASY52, Version 52.8 (8); SEMCAD X Version 14.6.10 (7373)

Pin=250mW/Area Scan (61x61x1): Interpolated grid: dx=1.500 mm, dy=1.500 mm
Maximum value of SAR (interpolated) = 14.4 W/kg

Pin=250mW/Zoom Scan (5x5x7)/Cube 0: Measurement grid: dx=8mm, dy=8mm, dz=5mm
Reference Value = 98.82 V/m; Power Drift = -0.02 dB
Peak SAR (extrapolated) = 16.0 W/kg
SAR(1 g) = 8.98 W/kg; SAR(10 g) = 4.74 W/kg
Maximum value of SAR (measured) = 13.6 W/kg

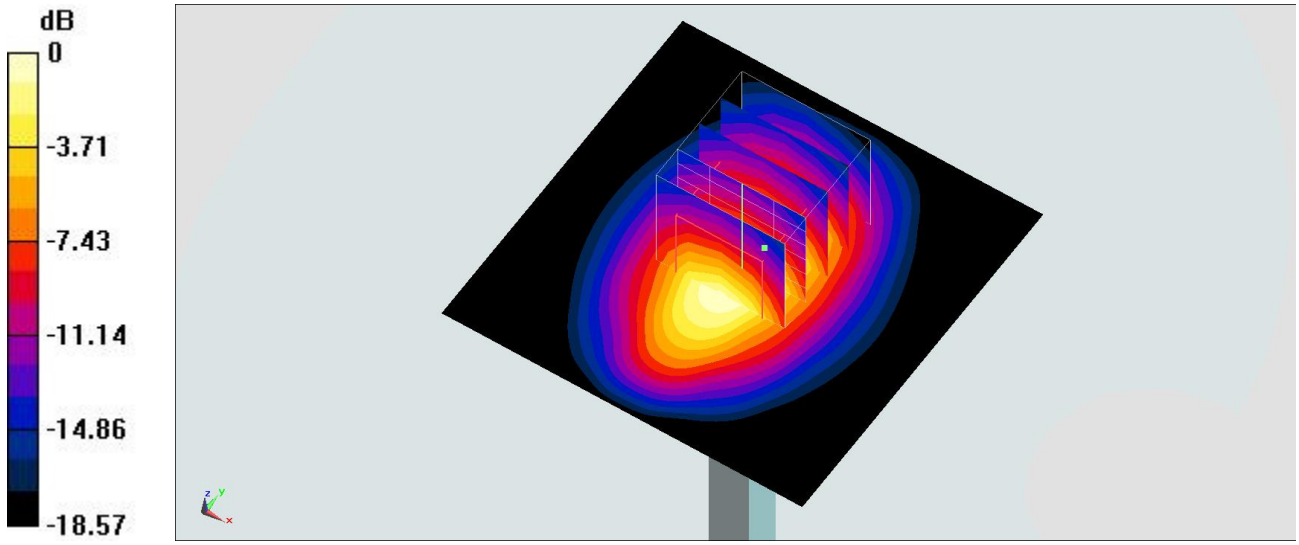

0 dB = 13.6 W/kg = 11.34 dBW/kg

Test Laboratory: Sporton International Inc. SAR/HAC Testing Lab Date: 2017/4/16

System Check_Head_2450MHz

DUT: D2450V2-926

Communication System: CW; Frequency: 2450 MHz;Duty Cycle: 1:1
Medium: HSL_2450_170416 Medium parameters used: f = 2450 MHz; σ = 1.81 mho/m; ε_r = 40.8; ρ = 1000 kg/m^3
Ambient Temperature：23.2 ℃； Liquid Temperature：22.2 ℃

DASY4 Configuration:
- Probe: EX3DV4 - SN3925; ConvF(7.47, 7.47, 7.47); Calibrated: 2016/5/26
- Sensor-Surface: 1.4mm (Mechanical Surface Detection)
- Electronics: DAE3 Sn495; Calibrated: 2016/5/27
- Phantom: SAM_Right; Type: QD000P40CD; Serial: TP:1815
- ;Postprocessing SW: SEMCAD, V1.8 Build 159

Pin=250mW/Area Scan (71x71x1): Measurement grid: dx=12mm, dy=12mm
Maximum value of SAR (interpolated) = 22.2 mW/g

Pin=250mW/Zoom Scan (7x7x7)/Cube 0: Measurement grid: dx=5mm, dy=5mm, dz=5mm
Reference Value = 113.1 V/m; Power Drift = 0.023 dB
Peak SAR (extrapolated) = 27.4 W/kg
SAR(1 g) = 13.2 mW/g; SAR(10 g) = 6.01 mW/g
Maximum value of SAR (measured) = 21.9 mW/g

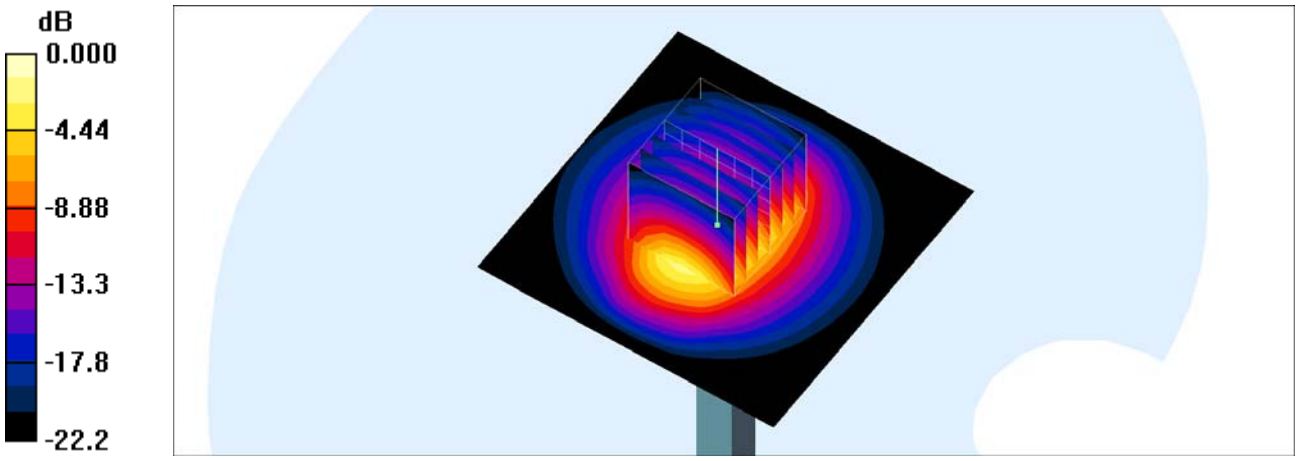

0 dB = 21.9mW/g

System Check_Head_2450MHz

DUT: D2450V2-926

Communication System: CW; Frequency: 2450 MHz;Duty Cycle: 1:1
Medium: HSL_2450_170428 Medium parameters used: f = 2450 MHz; σ = 1.776 S/m; ε_r = 40.635; ρ = 1000 kg/m^3
Ambient Temperature：23.4 ℃; Liquid Temperature：22.4 ℃

DASY5 Configuration:
- Probe: EX3DV4 - SN3931; ConvF(7.6, 7.6, 7.6); Calibrated: 2016/10/3;
- Sensor-Surface: 1.4mm (Mechanical Surface Detection)
- Electronics: DAE3 Sn577; Calibrated: 2016/9/28
- Phantom: SAM-Right; Type: SAM; Serial: TP-1303
- Measurement SW: DASY52, Version 52.8 (8);SEMCAD X Version 14.6.10 (7373)

Pin=250mW/Area Scan (71x71x1): Interpolated grid: dx=1.200 mm, dy=1.200 mm
Maximum value of SAR (interpolated) = 18.6 W/kg

Pin=250mW/Zoom Scan (7x7x7)/Cube 0: Measurement grid: dx=5mm, dy=5mm, dz=5mm
Reference Value = 110.9 V/m; Power Drift = 0.10 dB
Peak SAR (extrapolated) = 27.0 W/kg
SAR(1 g) = 12.4 W/kg; SAR(10 g) = 5.65 W/kg
Maximum value of SAR (measured) = 21.4 W/kg

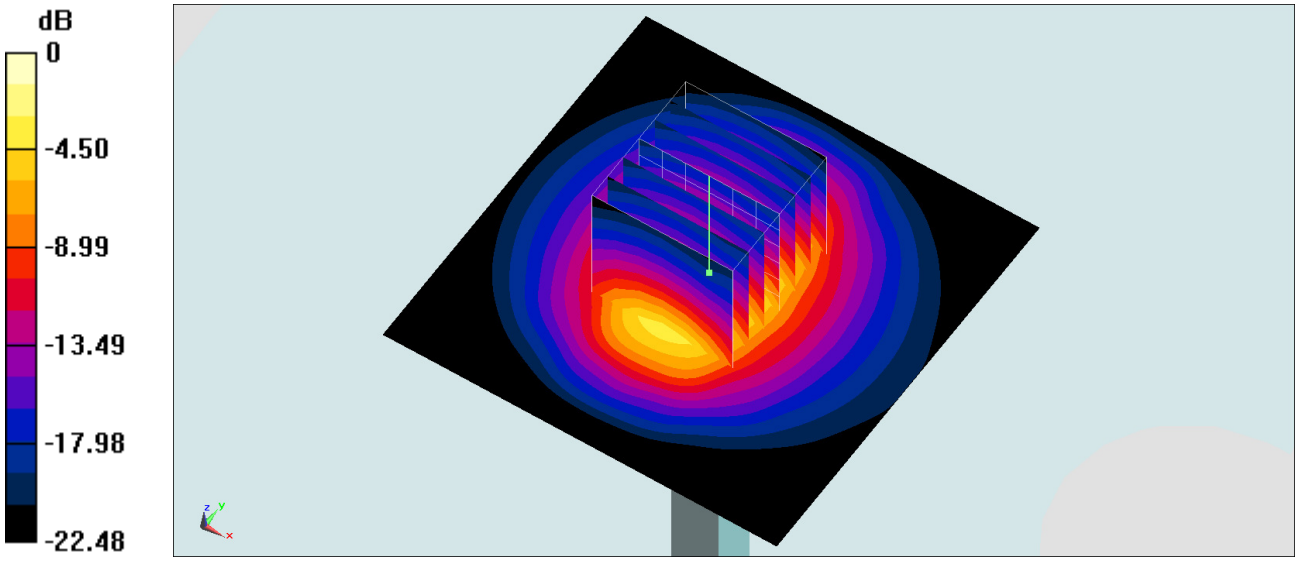

0 dB = 21.4 W/kg = 13.30 dBW/kg

System Check_Body_2450MHz

DUT: D2450V2-926

Communication System: CW ; Frequency: 2450 MHz;Duty Cycle: 1:1
Medium: MSL_2450_170423 Medium parameters used: f = 2450 MHz; σ = 2.024 S/m; ε_r = 52.188; ρ = 1000 kg/m^3
Ambient Temperature：23.4 ℃; Liquid Temperature：22.4 ℃

DASY5 Configuration:
- Probe: EX3DV4 - SN3931; ConvF(7.73, 7.73, 7.73); Calibrated: 2016/10/3;
- Sensor-Surface: 1.4mm (Mechanical Surface Detection)
- Electronics: DAE3 Sn577; Calibrated: 2016/9/28
- Phantom: SAM-Right; Type: SAM; Serial: TP-1303
- Measurement SW: DASY52, Version 52.8 (8);SEMCAD X Version 14.6.10 (7373)

Pin=250mW/Area Scan (61x61x1): Interpolated grid: dx=1.200 mm, dy=1.200 mm
Maximum value of SAR (interpolated) = 23.0 W/kg

Pin=250mW/Zoom Scan (7x7x7)/Cube 0: Measurement grid: dx=5mm, dy=5mm, dz=5mm
Reference Value = 110.7 V/m; Power Drift = -0.14 dB
Peak SAR (extrapolated) = 27.6 W/kg
SAR(1 g) = 13.6 W/kg; SAR(10 g) = 6.35 W/kg
Maximum value of SAR (measured) = 22.4 W/kg

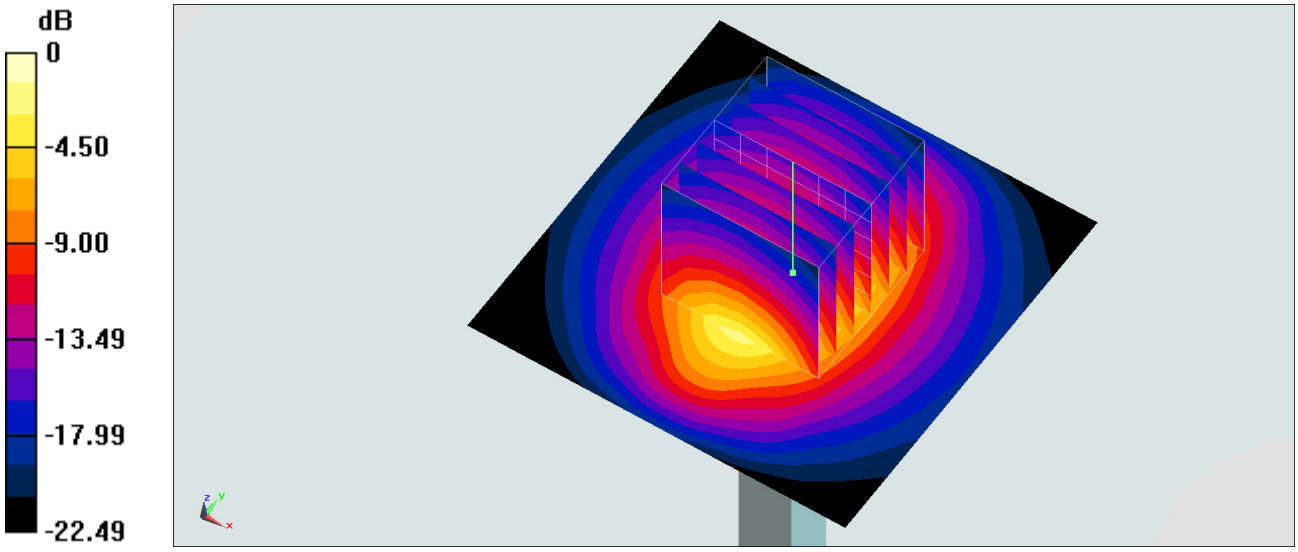

0 dB = 22.4 W/kg = 13.50 dBW/kg

System Check_Head_2600MHz

DUT: D2600V2-1008

Communication System: CW; Frequency: 2600 MHz;Duty Cycle: 1:1
Medium: HSL_2600_170427 Medium parameters used: f = 2600 MHz; σ = 1.951 S/m; ε_r = 40.084; ρ = 1000 kg/m^3
Ambient Temperature：23.4 ℃; Liquid Temperature：22.4 ℃

DASY5 Configuration:
- Probe: EX3DV4 - SN3931; ConvF(7.37, 7.37, 7.37); Calibrated: 2016/10/3;
- Sensor-Surface: 1.4mm (Mechanical Surface Detection)
- Electronics: DAE3 Sn577; Calibrated: 2016/9/28
- Phantom: SAM-Right; Type: SAM; Serial: TP-1303
- Measurement SW: DASY52, Version 52.8 (8);SEMCAD X Version 14.6.10 (7373)

Pin=250mW/Area Scan (61x61x1): Interpolated grid: dx=1.200 mm, dy=1.200 mm
Maximum value of SAR (interpolated) = 23.6 W/kg

Pin=250mW/Zoom Scan (7x7x7)/Cube 0: Measurement grid: dx=5mm, dy=5mm, dz=5mm
Reference Value = 113.9 V/m; Power Drift = -0.02 dB
Peak SAR (extrapolated) = 29.9 W/kg
SAR(1 g) = 13.7 W/kg; SAR(10 g) = 6.09 W/kg
Maximum value of SAR (measured) = 23.6 W/kg

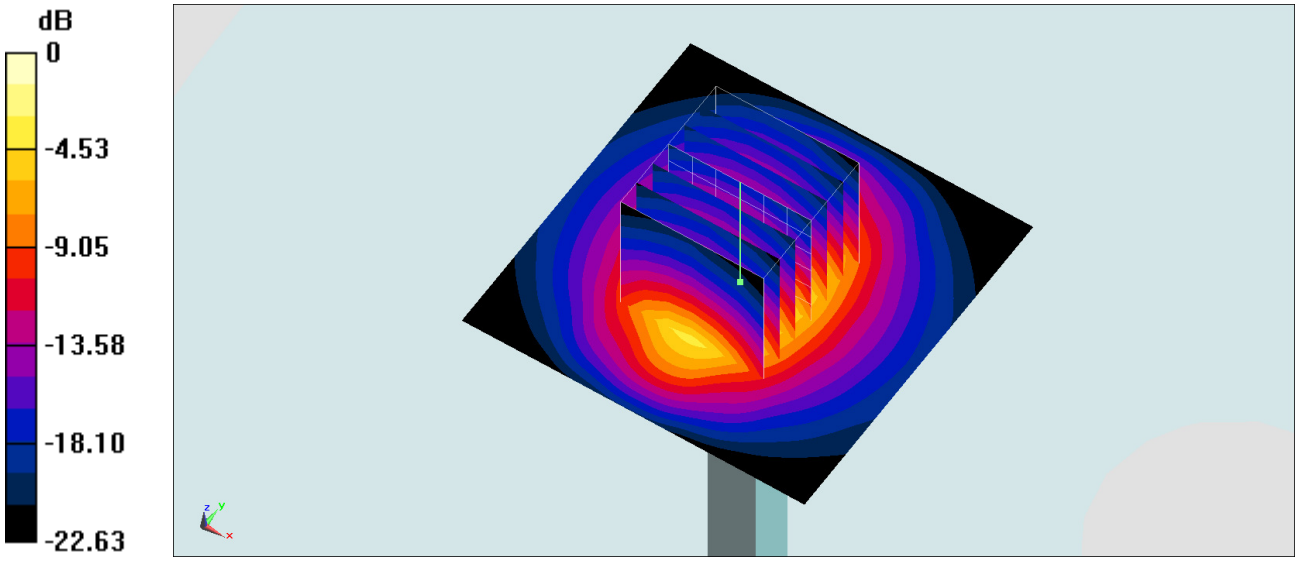

0 dB = 23.6 W/kg = 13.73 dBW/kg

System Check_Body_2600MHz

DUT: D2600V2-1008

Communication System: CW ; Frequency: 2600 MHz;Duty Cycle: 1:1
Medium: MSL_2600_170429 Medium parameters used: f = 2600 MHz; σ = 2.157 S/m; ε_r = 52.04; ρ = 1000 kg/m^3
Ambient Temperature：23.5 ℃; Liquid Temperature：22.5 ℃

DASY5 Configuration
- Probe: EX3DV4 - SN3976; ConvF(7.59, 7.59, 7.59); Calibrated: 2017/2/21;
- Sensor-Surface: 1.4mm (Mechanical Surface Detection)
- Electronics: DAE4 Sn1424; Calibrated: 2017/2/16
- Phantom: SAM_RIGHT; Type: QD000P40CD; Serial: 1719
- Measurement SW: DASY52, Version 52.8 (8); SEMCAD X Version 14.6.10 (7373)

Pin=250mW/Area Scan (61x61x1): Interpolated grid: dx=1.200 mm, dy=1.200 mm
Maximum value of SAR (interpolated) = 21.0 W/kg

Pin=250mW/Zoom Scan (7x7x7)/Cube 0: Measurement grid: dx=5mm, dy=5mm, dz=5mm
Reference Value = 98.44 V/m; Power Drift = 0.17 dB
Peak SAR (extrapolated) = 28.6 W/kg
SAR(1 g) = 13.4 W/kg; SAR(10 g) = 6.02 W/kg
Maximum value of SAR (measured) = 20.9 W/kg

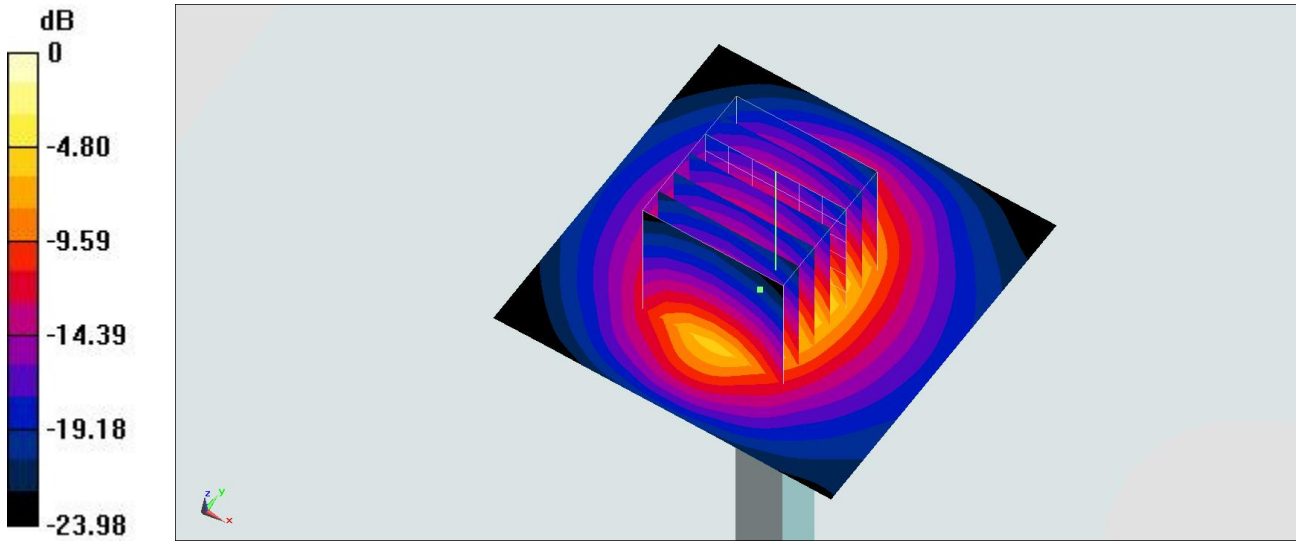

0 dB = 20.9 W/kg = 13.20 dBW/kg

Test Laboratory: Sporton International Inc. SAR/HAC Testing Lab Date: 2017/4/17

System Check_Body_5200MHz

DUT: D5GHzV2-1040

Communication System: CW; Frequency: 5200 MHz;Duty Cycle: 1:1
Medium: MSL_5G_170417 Medium parameters used: f = 5200 MHz; σ = 5.45 mho/m; ε_r = 47.1; ρ = 1000 kg/m^3
Ambient Temperature：23.7 ℃; Liquid Temperature：22.7 ℃

DASY4 Configuration:
- Probe: EX3DV4 - SN3925; ConvF(4.39, 4.39, 4.39); Calibrated: 2016/5/26
- Sensor-Surface: 1.4mm (Mechanical Surface Detection)
- Electronics: DAE3 Sn495; Calibrated: 2016/5/27
- Phantom: SAM_Right; Type: QD000P40CD; Serial: TP:1815
- ;Postprocessing SW: SEMCAD, V1.8 Build 159

Pin=100mW/Area Scan (71x71x1): Measurement grid: dx=10mm, dy=10mm
Maximum value of SAR (interpolated) = 19.4 mW/g

Pin=100mW/Zoom Scan (7x7x7)/Cube 0: Measurement grid: dx=4mm, dy=4mm, dz=1.4mm
Reference Value = 66.0 V/m; Power Drift = 0.177 dB
Peak SAR (extrapolated) = 30.5 W/kg
SAR(1 g) = 7.93 mW/g; SAR(10 g) = 2.17 mW/g
Maximum value of SAR (measured) = 18.8 mW/g

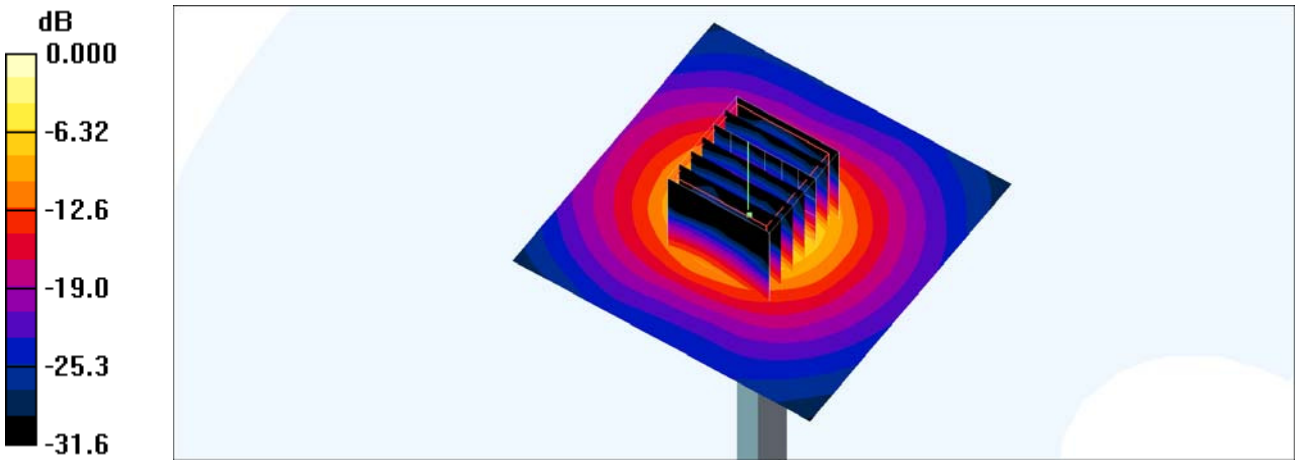

0 dB = 18.8mW/g

System Check_Head_5250MHz

DUT: D5GHzV2-1006

Communication System: CW ; Frequency: 5250 MHz;Duty Cycle: 1:1
Medium: HSL_5G_170428 Medium parameters used: f = 5250 MHz; σ = 4.559 S/m; ε_r = 37.392; ρ = 1000 kg/m^3
Ambient Temperature：23.4 ℃; Liquid Temperature：22.4 ℃

DASY5 Configuration:
- Probe: EX3DV4 - SN3931; ConvF(5.38, 5.38, 5.38); Calibrated: 2016/10/3;
- Sensor-Surface: 1.4mm (Mechanical Surface Detection)
- Electronics: DAE3 Sn577; Calibrated: 2016/9/28
- Phantom: SAM-Right; Type: SAM; Serial: TP-1303
- Measurement SW: DASY52, Version 52.8 (8);SEMCAD X Version 14.6.10 (7373)

Pin=100mW/Area Scan (71x71x1): Interpolated grid: dx=1.000 mm, dy=1.000 mm
Maximum value of SAR (interpolated) = 19.1 W/kg

Pin=100mW/Zoom Scan (7x7x7)/Cube 0: Measurement grid: dx=4mm, dy=4mm, dz=1.4mm
Reference Value = 72.82 V/m; Power Drift = -0.10 dB
Peak SAR (extrapolated) = 31.3 W/kg
SAR(1 g) = 7.79 W/kg; SAR(10 g) = 2.17 W/kg
Maximum value of SAR (measured) = 19.5 W/kg

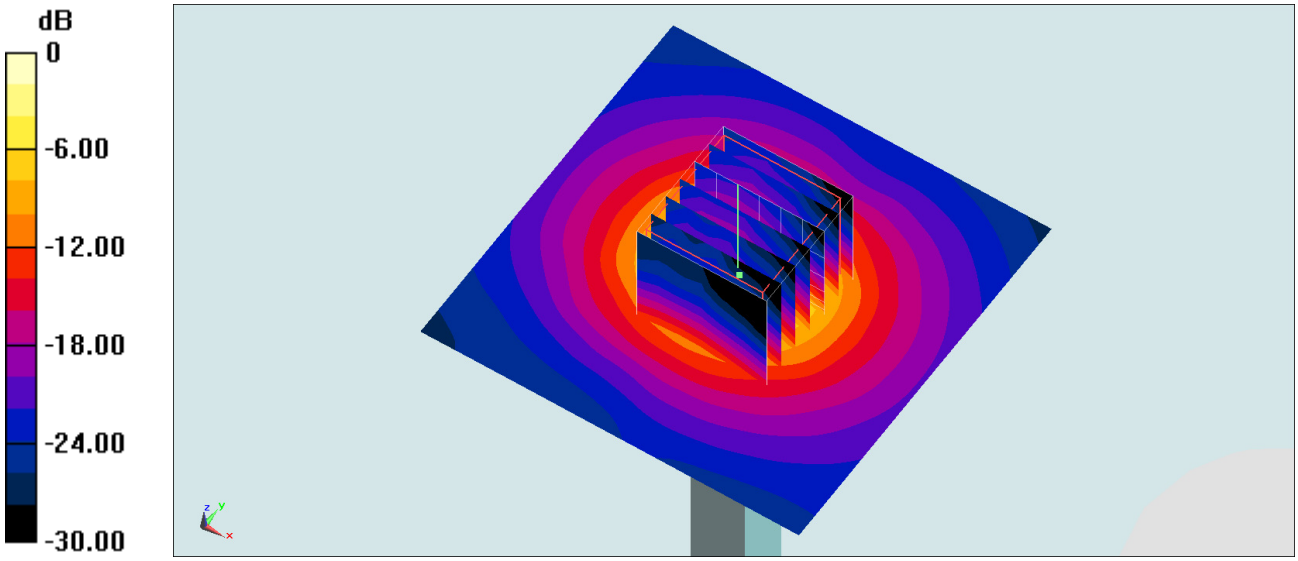

0 dB = 19.5 W/kg = 12.90 dBW/kg

System Check_Body_5250MHz

DUT: D5GHzV2-1006

Communication System: CW; Frequency: 5250 MHz;Duty Cycle: 1:1
Medium: MSL_5G_170427 Medium parameters used: f = 5250 MHz; σ = 5.228 S/m; ε_r = 46.937; ρ = 1000 kg/m^3
Ambient Temperature：23.4 ℃; Liquid Temperature：22.4 ℃

DASY5 Configuration:
- Probe: EX3DV4 - SN3931; ConvF(4.57, 4.57, 4.57); Calibrated: 2016/10/3;
- Sensor-Surface: 1.4mm (Mechanical Surface Detection)
- Electronics: DAE3 Sn577; Calibrated: 2016/9/28
- Phantom: SAM-Right; Type: SAM; Serial: TP-1303
- Measurement SW: DASY52, Version 52.8 (8);SEMCAD X Version 14.6.10 (7373)

Pin=100mW/Area Scan (71x71x1): Interpolated grid: dx=1.000 mm, dy=1.000 mm
Maximum value of SAR (interpolated) = 17.0 W/kg

Pin=100mW/Zoom Scan (7x7x7)/Cube 0: Measurement grid: dx=4mm, dy=4mm, dz=1.4mm
Reference Value = 66.78 V/m; Power Drift = -0.12 dB
Peak SAR (extrapolated) = 29.3 W/kg
SAR(1 g) = 7.17 W/kg; SAR(10 g) = 1.91 W/kg
Maximum value of SAR (measured) = 18.1 W/kg

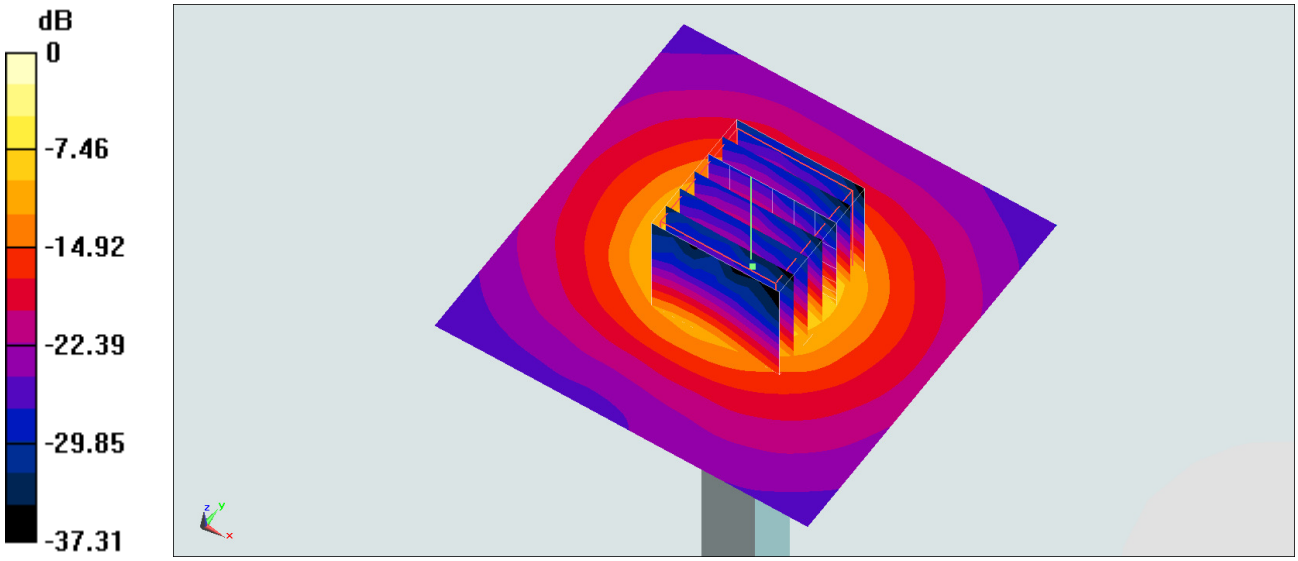

0 dB = 18.1 W/kg = 12.58 dBW/kg

Test Laboratory: Sporton International Inc. SAR/HAC Testing Lab Date: 2017/4/16

System Check_Head_5600MHz

DUT: D5GHzV2-1040

Communication System: CW; Frequency: 5600 MHz;Duty Cycle: 1:1
Medium: HSL_5G_170416 Medium parameters used: f = 5600 MHz; σ = 5.01 mho/m; ε_r = 36.1; ρ = 1000 kg/m^3
Ambient Temperature：23.8 ℃; Liquid Temperature：22.8 ℃

DASY4 Configuration:
- Probe: EX3DV4 - SN3925; ConvF(4.47, 4.47, 4.47); Calibrated: 2016/5/26
- Sensor-Surface: 1.4mm (Mechanical Surface Detection)
- Electronics: DAE3 Sn495; Calibrated: 2016/5/27
- Phantom: SAM_Right; Type: QD000P40CD; Serial: TP:1815
- ;Postprocessing SW: SEMCAD, V1.8 Build 159

Pin=100mW/Area Scan (71x71x1): Measurement grid: dx=10mm, dy=10mm
Maximum value of SAR (interpolated) = 20.0 mW/g

Pin=100mW/Zoom Scan (7x7x7)/Cube 0: Measurement grid: dx=4mm, dy=4mm, dz=1.4mm
Reference Value = 69.5 V/m; Power Drift = 0.126 dB
Peak SAR (extrapolated) = 33.1 W/kg
SAR(1 g) = 7.99 mW/g; SAR(10 g) = 2.27 mW/g
Maximum value of SAR (measured) = 20.6 mW/g

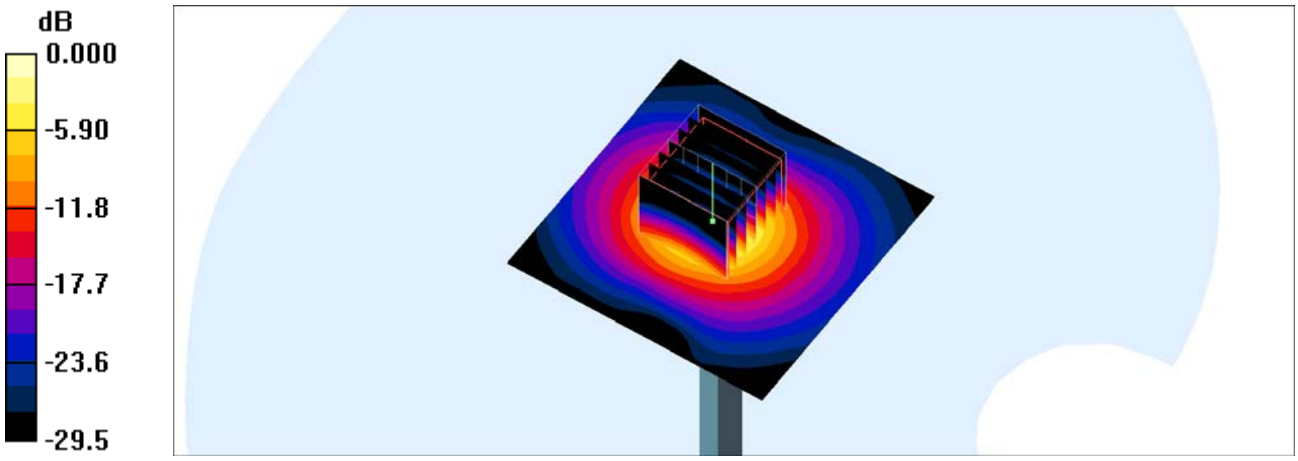

0 dB = 20.6mW/g

System Check_Body_5600MHz

DUT: D5GHzV2-1006

Communication System: CW; Frequency: 5600 MHz;Duty Cycle: 1:1
Medium: MSL_5G_170427 Medium parameters used: f = 5600 MHz; σ = 5.664 S/m; ε_r = 46.39; ρ = 1000 kg/m^3
Ambient Temperature：23.4 ℃; Liquid Temperature：22.4 ℃

DASY5 Configuration:
- Probe: EX3DV4 - SN3931; ConvF(3.71, 3.71, 3.71); Calibrated: 2016/10/3;
- Sensor-Surface: 1.4mm (Mechanical Surface Detection)
- Electronics: DAE3 Sn577; Calibrated: 2016/9/28
- Phantom: SAM-Right; Type: SAM; Serial: TP-1303
- Measurement SW: DASY52, Version 52.8 (8);SEMCAD X Version 14.6.10 (7373)

Pin=100mW/Area Scan (71x71x1): Interpolated grid: dx=1.000 mm, dy=1.000 mm
Maximum value of SAR (interpolated) = 19.0 W/kg

Pin=100mW/Zoom Scan (7x7x7)/Cube 0: Measurement grid: dx=4mm, dy=4mm, dz=1.4mm
Reference Value = 70.11 V/m; Power Drift = 0.06 dB
Peak SAR (extrapolated) = 33.2 W/kg
SAR(1 g) = 7.9 W/kg; SAR(10 g) = 2.19 W/kg
Maximum value of SAR (measured) = 20.7 W/kg

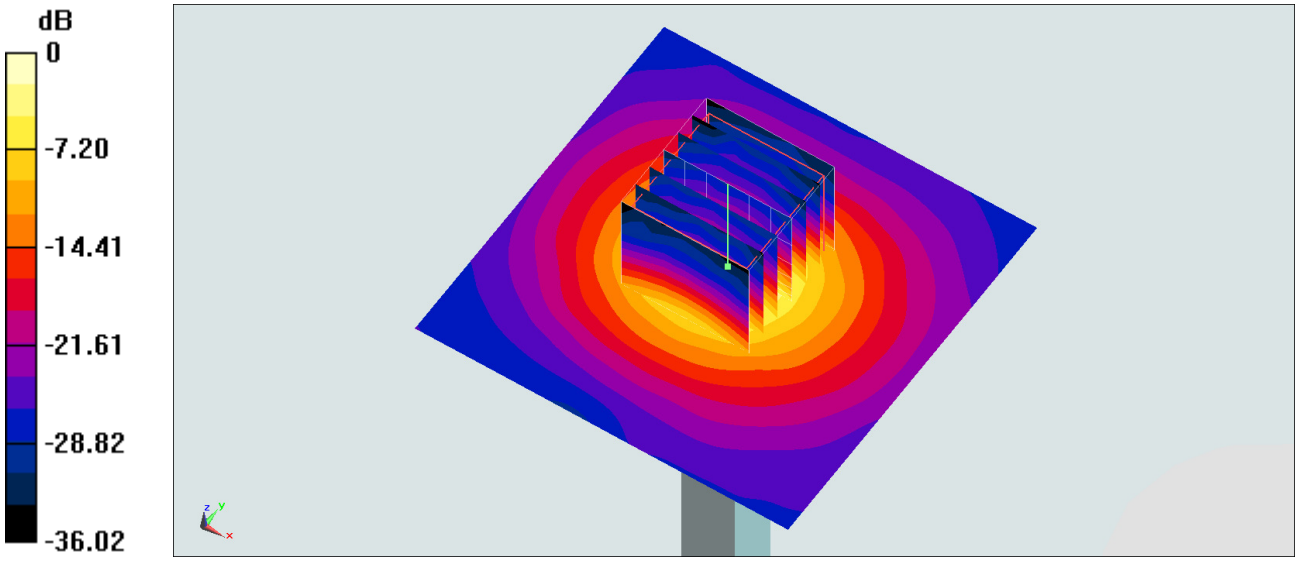

0 dB = 20.7 W/kg = 13.16 dBW/kg

System Check_Head_5750MHz

DUT: D5GHzV2-1006

Communication System: CW; Frequency: 5750 MHz;Duty Cycle: 1:1
Medium: HSL_5G_170428 Medium parameters used: f = 5750 MHz; σ = 5.065 S/m; ε_r = 36.718; ρ = 1000 kg/m^3
Ambient Temperature：23.4 ℃; Liquid Temperature：22.4 ℃

DASY5 Configuration:
- Probe: EX3DV4 - SN3931; ConvF(4.84, 4.84, 4.84); Calibrated: 2016/10/3;
- Sensor-Surface: 1.4mm (Mechanical Surface Detection)
- Electronics: DAE3 Sn577; Calibrated: 2016/9/28
- Phantom: SAM-Right; Type: SAM; Serial: TP-1303
- Measurement SW: DASY52, Version 52.8 (8);SEMCAD X Version 14.6.10 (7373)

Pin=100mW/Area Scan (71x71x1): Interpolated grid: dx=1.000 mm, dy=1.000 mm
Maximum value of SAR (interpolated) = 19.9 W/kg

Pin=100mW/Zoom Scan (7x7x7)/Cube 0: Measurement grid: dx=4mm, dy=4mm, dz=1.4mm
Reference Value = 70.22 V/m; Power Drift = -0.00 dB
Peak SAR (extrapolated) = 36.2 W/kg
SAR(1 g) = 8.03 W/kg; SAR(10 g) = 2.24 W/kg
Maximum value of SAR (measured) = 20.2 W/kg

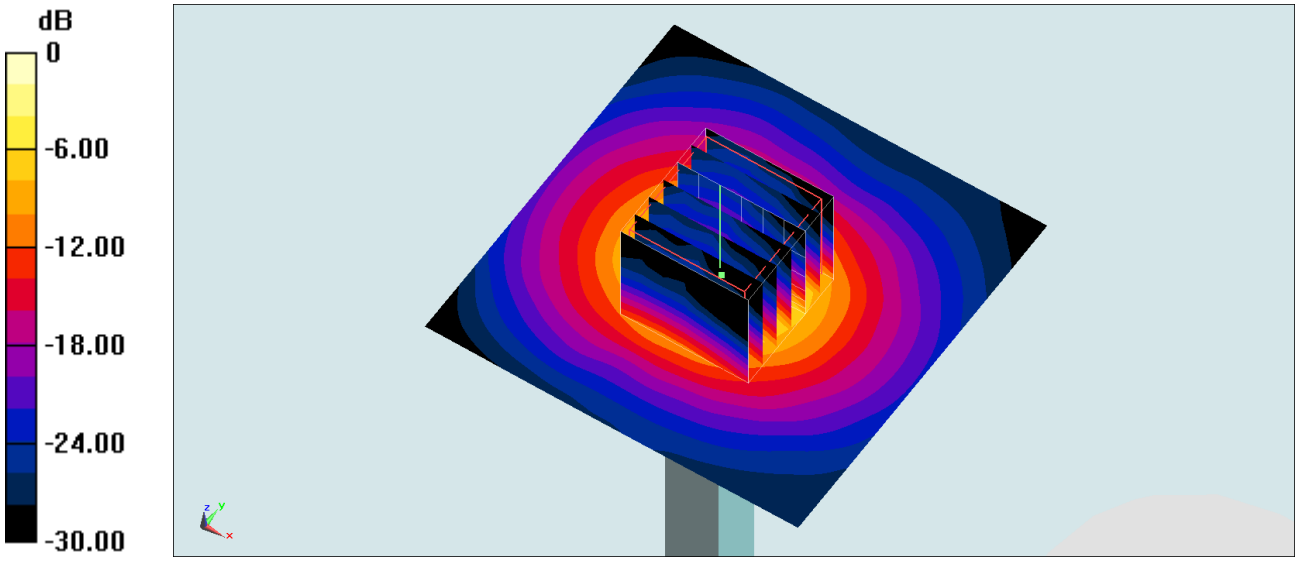

0 dB = 20.2 W/kg = 13.05 dBW/kg

Test Laboratory: Sporton International Inc. SAR/HAC Testing Lab Date: 2017/4/20

System Check_Head_5800MHz

DUT: D5GHzV2-1040

Communication System: CW; Frequency: 5800 MHz;Duty Cycle: 1:1
Medium: HSL_5G_170420 Medium parameters used: f = 5800 MHz; σ = 5.09 mho/m; ε_r = 36.2; ρ = 1000 kg/m^3
Ambient Temperature：23.3 ℃; Liquid Temperature：22.3 ℃

DASY4 Configuration:
- Probe: EX3DV4 - SN3925; ConvF(4.51, 4.51, 4.51); Calibrated: 2016/5/26
- Sensor-Surface: 1.4mm (Mechanical Surface Detection)
- Electronics: DAE3 Sn495; Calibrated: 2016/5/27
- Phantom: SAM_Right; Type: QD000P40CD; Serial: TP:1815
- ;Postprocessing SW: SEMCAD, V1.8 Build 159

Pin=100mW/Area Scan (71x71x1): Measurement grid: dx=10mm, dy=10mm
Maximum value of SAR (interpolated) = 18.3 mW/g

Pin=100mW/Zoom Scan (7x7x7)/Cube 0: Measurement grid: dx=4mm, dy=4mm, dz=1.4mm
Reference Value = 67.2 V/m; Power Drift = 0.110 dB
Peak SAR (extrapolated) = 31.1 W/kg
SAR(1 g) = 7.36 mW/g; SAR(10 g) = 2.02 mW/g
Maximum value of SAR (measured) = 18.9 mW/g

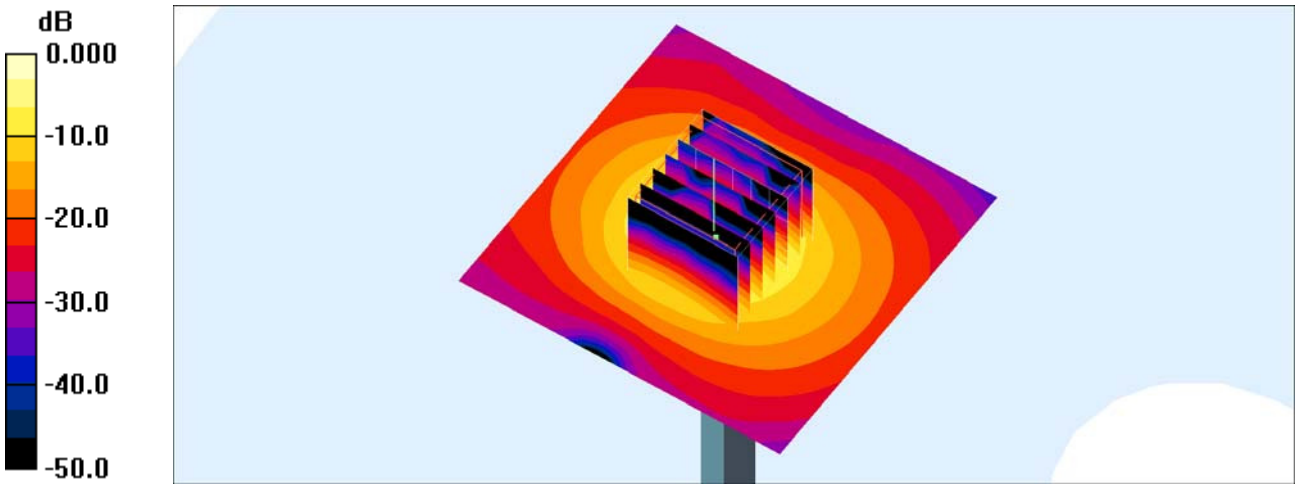

0 dB = 18.9mW/g

Test Laboratory: Sporton International Inc. SAR/HAC Testing Lab Date: 2017/4/17

System Check_Body_5800MHz

DUT: D5GHzV2-1040

Communication System: CW; Frequency: 5800 MHz;Duty Cycle: 1:1
Medium: MSL_5G_170417 Medium parameters used: f = 5800 MHz; σ = 6.23 mho/m; ε_r = 46; ρ = 1000 kg/m^3
Ambient Temperature：23.7 ℃; Liquid Temperature：22.7 ℃

DASY4 Configuration:
- Probe: EX3DV4 - SN3925; ConvF(3.85, 3.85, 3.85); Calibrated: 2016/5/26
- Sensor-Surface: 1.4mm (Mechanical Surface Detection)
- Electronics: DAE3 Sn495; Calibrated: 2016/5/27
- Phantom: SAM_Right; Type: QD000P40CD; Serial: TP:1815
- ;Postprocessing SW: SEMCAD, V1.8 Build 159

Pin=100mW/Area Scan (71x71x1): Measurement grid: dx=10mm, dy=10mm
Maximum value of SAR (interpolated) = 18.4 mW/g

Pin=100mW/Zoom Scan (7x7x7)/Cube 0: Measurement grid: dx=4mm, dy=4mm, dz=1.4mm
Reference Value = 62.0 V/m; Power Drift = 0.147 dB
Peak SAR (extrapolated) = 30.7 W/kg
SAR(1 g) = 7.1 mW/g; SAR(10 g) = 1.97 mW/g
Maximum value of SAR (measured) = 17.2 mW/g

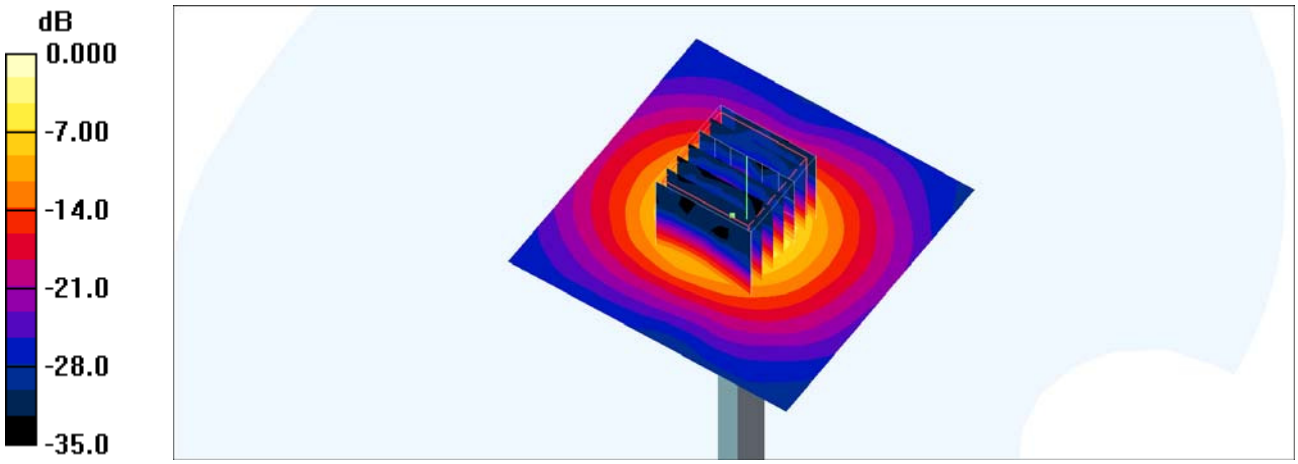

0 dB = 17.2mW/g