System Check_Head_750MHz

DUT: D750V3-1078

Communication System: CW ; Frequency: 750 MHz;Duty Cycle: 1:1
Medium: HSL_750_170530 Medium parameters used: f = 750 MHz; σ = 0.895 S/m; ε_r = 40.718; ρ = 1000 kg/m^3
Ambient Temperature：23.4 ℃； Liquid Temperature：22.4 ℃

DASY5 Configuration
- Probe: EX3DV4 - SN3931; ConvF(10.68, 10.68, 10.68); Calibrated: 2016/10/3;
- Sensor-Surface: 1.4mm (Mechanical Surface Detection)
- Electronics: DAE3 Sn577; Calibrated: 2016/9/28
- Phantom: SAM_RIGHT; Type: QD000P40CD; Serial: 1719
- Measurement SW: DASY52, Version 52.8 (8); SEMCAD X Version 14.6.10 (7373)

Pin=250mW/Area Scan (61x61x1): Interpolated grid: dx=1.500 mm, dy=1.500 mm
Maximum value of SAR (interpolated) = 2.67 W/kg

Pin=250mW/Zoom Scan (5x5x7)/Cube 0: Measurement grid: dx=8mm, dy=8mm, dz=5mm
Reference Value = 55.95 V/m; Power Drift = -0.02 dB
Peak SAR (extrapolated) = 3.12 W/kg
SAR(1 g) = 2.12 W/kg; SAR(10 g) = 1.41 W/kg
Maximum value of SAR (measured) = 2.68 W/kg

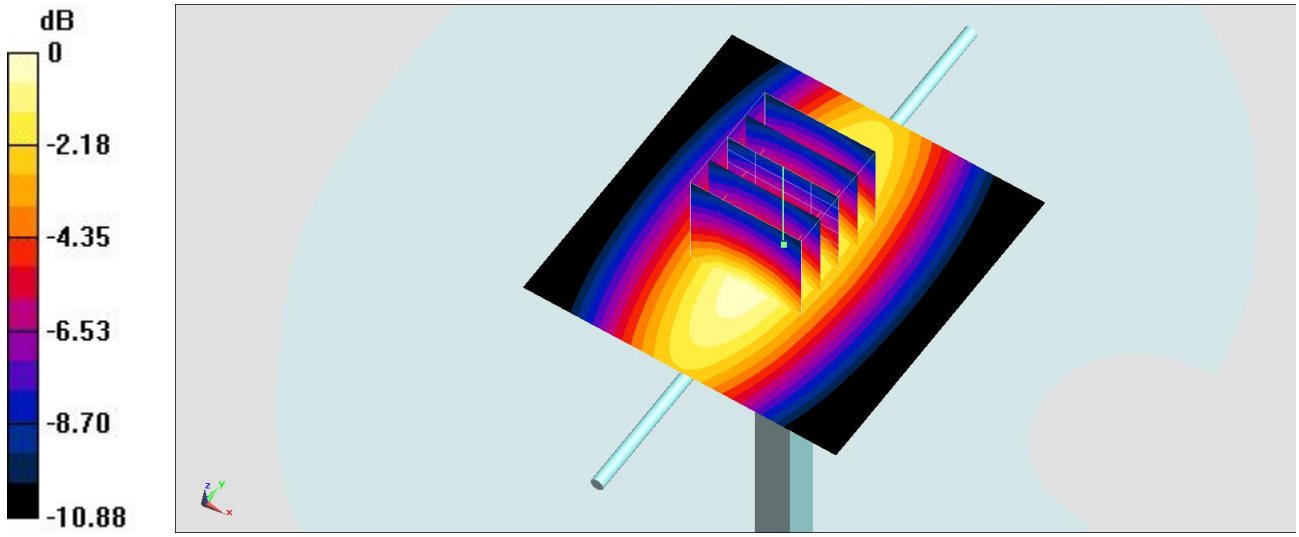

0 dB = 2.68 W/kg = 4.28 dBW/kg

System Check_Body_750MHz

DUT: D750V3-1078

Communication System: CW ; Frequency: 750 MHz;Duty Cycle: 1:1
Medium: MSL_750_170528 Medium parameters used: f = 750 MHz; σ = 0.975 S/m; ε_r = 54.274; ρ = 1000 kg/m^3
Ambient Temperature：23.5 ℃； Liquid Temperature：22.5 ℃

DASY5 Configuration
- Probe: EX3DV4 - SN3931; ConvF(10.37, 10.37, 10.37); Calibrated: 2016/10/3;
- Sensor-Surface: 1.4mm (Mechanical Surface Detection)
- Electronics: DAE3 Sn577; Calibrated: 2016/9/28
- Phantom: SAM_RIGHT; Type: QD000P40CD; Serial: 1719
- Measurement SW: DASY52, Version 52.8 (8); SEMCAD X Version 14.6.10 (7373)

Pin=250mW/Area Scan (61x61x1): Interpolated grid: dx=1.500 mm, dy=1.500 mm
Maximum value of SAR (interpolated) = 3.18 W/kg

Pin=250mW/Zoom Scan (5x5x7)/Cube 0: Measurement grid: dx=8mm, dy=8mm, dz=5mm
Reference Value = 57.26 V/m; Power Drift = -0.02 dB
Peak SAR (extrapolated) = 3.34 W/kg
SAR(1 g) = 2.29 W/kg; SAR(10 g) = 1.55 W/kg
Maximum value of SAR (measured) = 2.86 W/kg

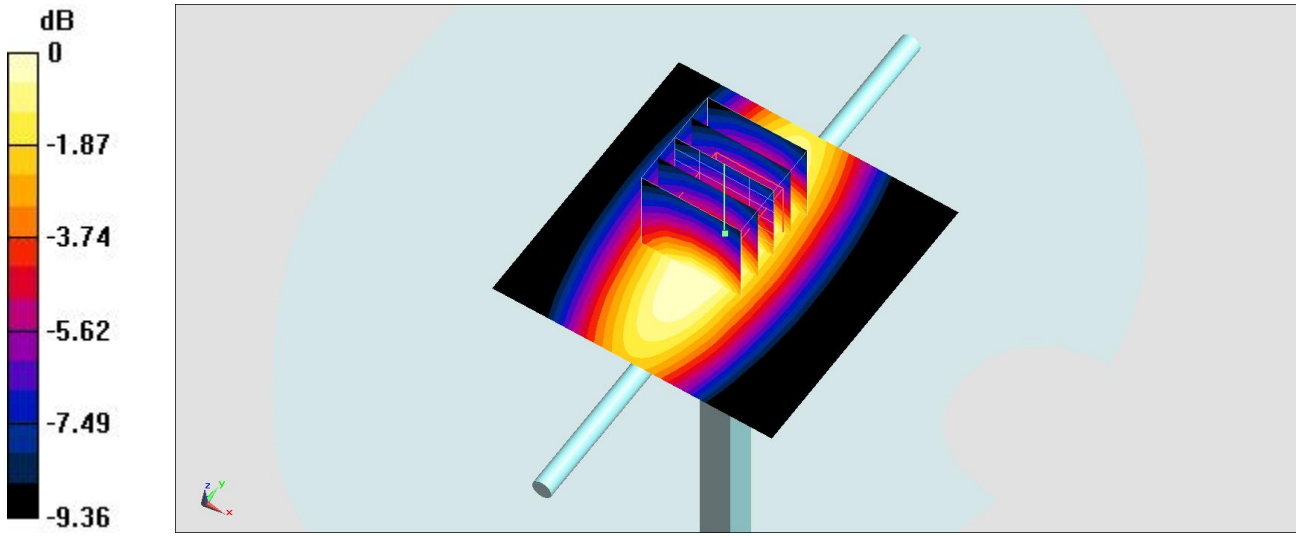

0 dB = 2.86 W/kg = 4.56 dBW/kg

System Check_Head_835MHz

DUT: D835V2-499

Communication System: CW; Frequency: 835 MHz;Duty Cycle: 1:1
Medium: HSL_850_170530 Medium parameters used: f = 835 MHz; σ = 0.885 S/m; ε_r = 42.274; ρ = 1000 kg/m^3
Ambient Temperature：23.4 ℃； Liquid Temperature：22.4 ℃

DASY5 Configuration
- Probe: EX3DV4 - SN3931; ConvF(10.35, 10.35, 10.35); Calibrated: 2016/10/3;
- Sensor-Surface: 1.4mm (Mechanical Surface Detection)
- Electronics: DAE3 Sn577; Calibrated: 2016/9/28
- Phantom: SAM_RIGHT; Type: QD000P40CD; Serial: 1719
- Measurement SW: DASY52, Version 52.8 (8); SEMCAD X Version 14.6.10 (7373)

Pin=250mW/Area Scan (61x61x1): Interpolated grid: dx=1.500 mm, dy=1.500 mm
Maximum value of SAR (interpolated) = 2.93 W/kg

Pin=250mW/Zoom Scan (5x5x7)/Cube 0: Measurement grid: dx=8mm, dy=8mm, dz=5mm
Reference Value = 58.63 V/m; Power Drift = -0.12 dB
Peak SAR (extrapolated) = 3.38 W/kg
SAR(1 g) = 2.3 W/kg; SAR(10 g) = 1.52 W/kg
Maximum value of SAR (measured) = 2.87 W/kg

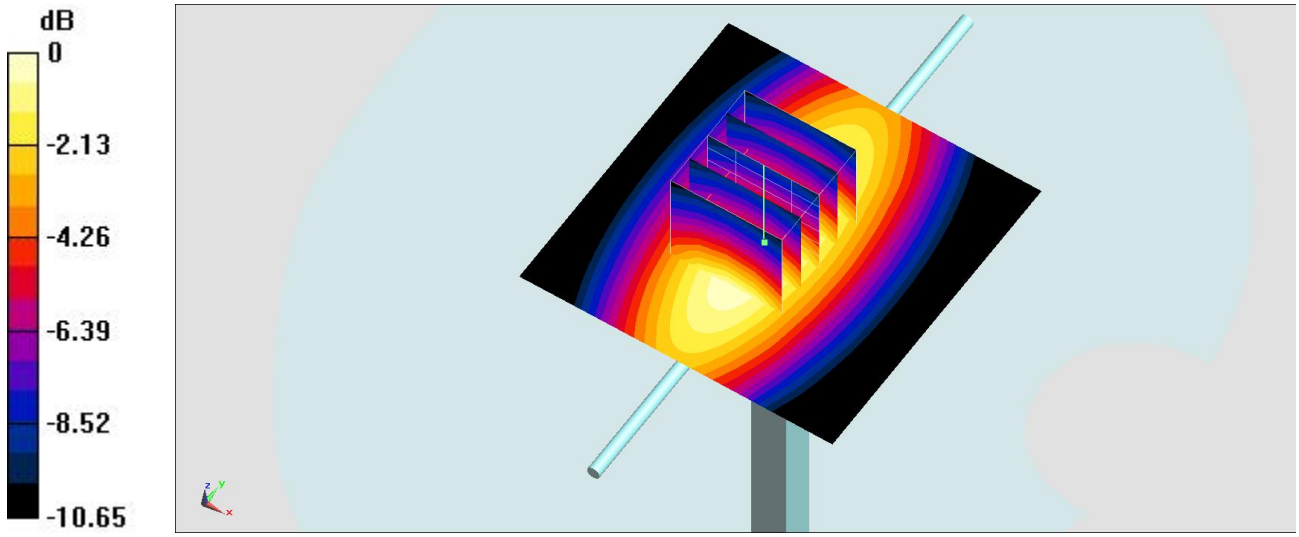

0 dB = 2.87 W/kg = 4.58 dBW/kg

System Check_Body_835MHz

DUT: D835V2-499

Communication System: CW; Frequency: 835 MHz;Duty Cycle: 1:1
Medium: MSL_850_170528 Medium parameters used: f = 835 MHz; σ = 0.96 S/m; ε_r = 54.591; ρ = 1000 kg/m^3
Ambient Temperature：23.5 ℃； Liquid Temperature：22.5 ℃

DASY5 Configuration
- Probe: EX3DV4 - SN3931; ConvF(10.14, 10.14, 10.14); Calibrated: 2016/10/3;
- Sensor-Surface: 1.4mm (Mechanical Surface Detection)
- Electronics: DAE3 Sn577; Calibrated: 2016/9/28
- Phantom: SAM_RIGHT; Type: QD000P40CD; Serial: 1719
- Measurement SW: DASY52, Version 52.8 (8); SEMCAD X Version 14.6.10 (7373)

Pin=250mW/Area Scan (61x61x1): Interpolated grid: dx=1.500 mm, dy=1.500 mm
Maximum value of SAR (interpolated) = 3.30 W/kg

Pin=250mW/Zoom Scan (5x5x7)/Cube 0: Measurement grid: dx=8mm, dy=8mm, dz=5mm
Reference Value = 60.56 V/m; Power Drift = -0.06 dB
Peak SAR (extrapolated) = 3.69 W/kg
SAR(1 g) = 2.48 W/kg; SAR(10 g) = 1.65 W/kg
Maximum value of SAR (measured) = 3.28 W/kg

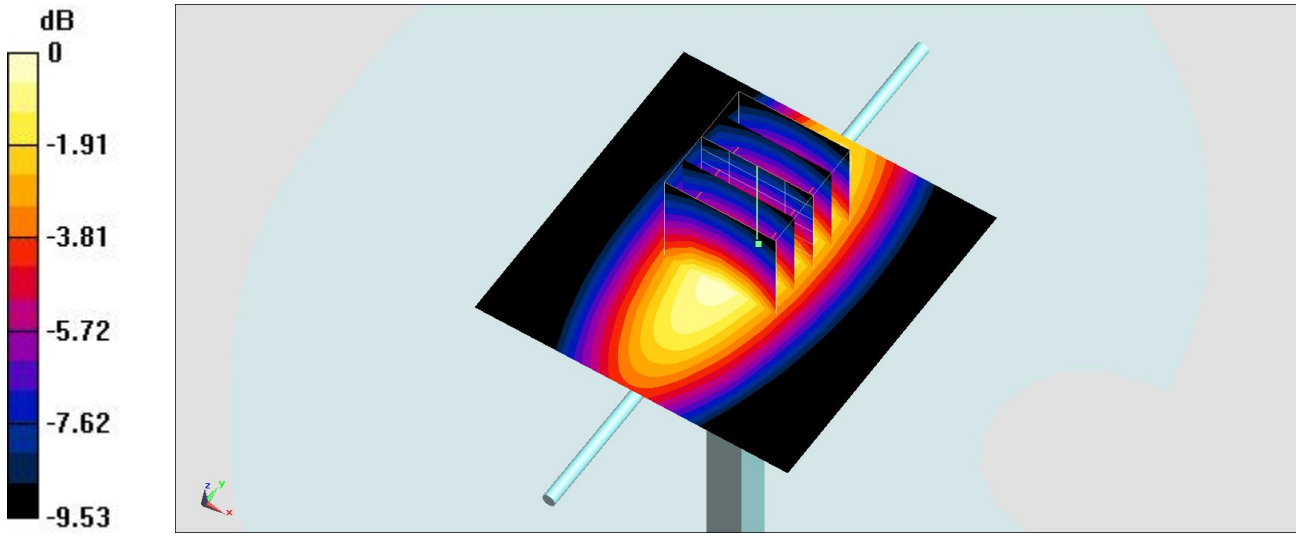

0 dB = 3.28 W/kg = 5.16 dBW/kg

System Check_Head_1750MHz

DUT: D1750V2-1068

Communication System: CW ; Frequency: 1750 MHz;Duty Cycle: 1:1
Medium: HSL_1750_170525 Medium parameters used: f = 1750 MHz; σ = 1.411 S/m; ε_r = 40.564; ρ = 1000 kg/m^3
Ambient Temperature：23.3 ℃； Liquid Temperature：22.3 ℃

DASY5 Configuration
- Probe: EX3DV4 - SN7375; ConvF(8.31, 8.31, 8.31); Calibrated: 2016/12/8;
- Sensor-Surface: 1.4mm (Mechanical Surface Detection)
- Electronics: DAE4 Sn1305; Calibrated: 2016/12/15
- Phantom: SAM LEFT; Type: QD000P40CD; Serial: TP:1718
- Measurement SW: DASY52, Version 52.8 (8); SEMCAD X Version 14.6.10 (7373)

Pin=250mW/Area Scan (61x61x1): Interpolated grid: dx=1.500 mm, dy=1.500 mm
Maximum value of SAR (interpolated) = 13.4 W/kg

Pin=250mW/Zoom Scan (5x5x7)/Cube 0: Measurement grid: dx=8mm, dy=8mm, dz=5mm
Reference Value = 98.21 V/m; Power Drift = -0.14 dB
Peak SAR (extrapolated) = 16.1 W/kg
SAR(1 g) = 9.73 W/kg; SAR(10 g) = 5.27 W/kg
Maximum value of SAR (measured) = 12.9 W/kg

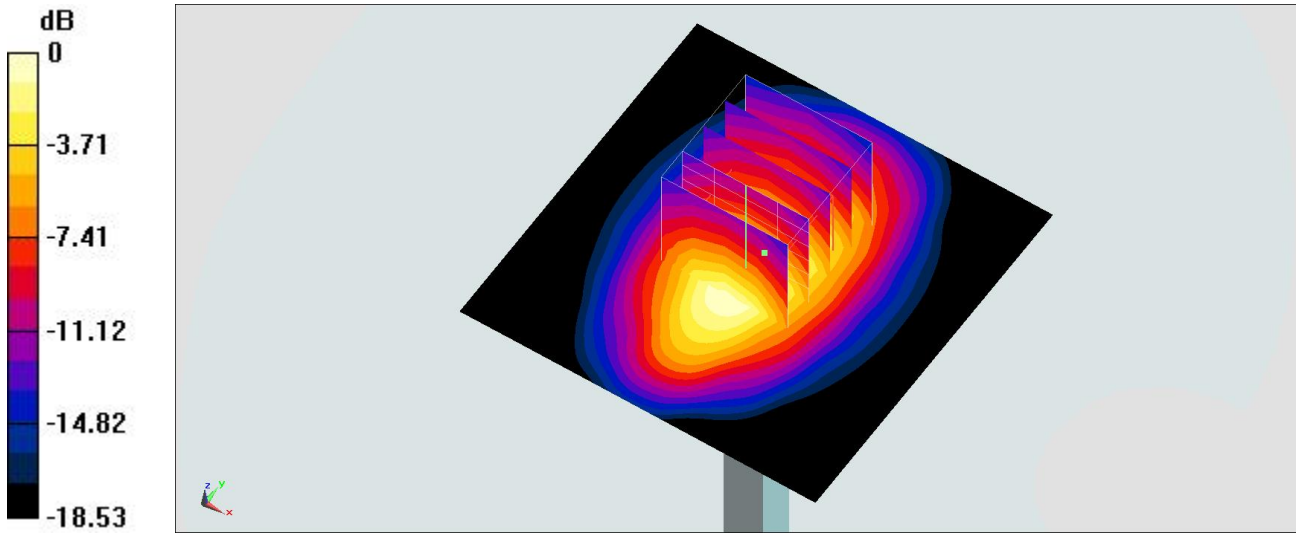

0 dB = 12.9 W/kg = 11.11 dBW/kg

System Check_Body_1750MHz

DUT: D1750V2-1068

Communication System: CW ; Frequency: 1750 MHz;Duty Cycle: 1:1
Medium: MSL_1750_170525 Medium parameters used: f = 1750 MHz; σ = 1.529 S/m; ε_r = 55.734; ρ = 1000 kg/m^3
Ambient Temperature：23.3 ℃； Liquid Temperature：22.3 ℃

DASY5 Configuration
- Probe: EX3DV4 - SN7375; ConvF(8.22, 8.22, 8.22); Calibrated: 2016/12/8;
- Sensor-Surface: 1.4mm (Mechanical Surface Detection)
- Electronics: DAE4 Sn1305; Calibrated: 2016/12/15
- Phantom: SAM_RIGHT; Type: QD000P40CD; Serial: 1719
- Measurement SW: DASY52, Version 52.8 (8); SEMCAD X Version 14.6.10 (7373)

Pin=250mW/Area Scan (61x61x1): Interpolated grid: dx=1.500 mm, dy=1.500 mm
Maximum value of SAR (interpolated) = 13.9 W/kg

Pin=250mW/Zoom Scan (5x5x7)/Cube 0: Measurement grid: dx=8mm, dy=8mm, dz=5mm
Reference Value = 97.63 V/m; Power Drift = 0.05 dB
Peak SAR (extrapolated) = 16.3 W/kg
SAR(1 g) = 9.34 W/kg; SAR(10 g) = 5.07 W/kg
Maximum value of SAR (measured) = 13.8 W/kg

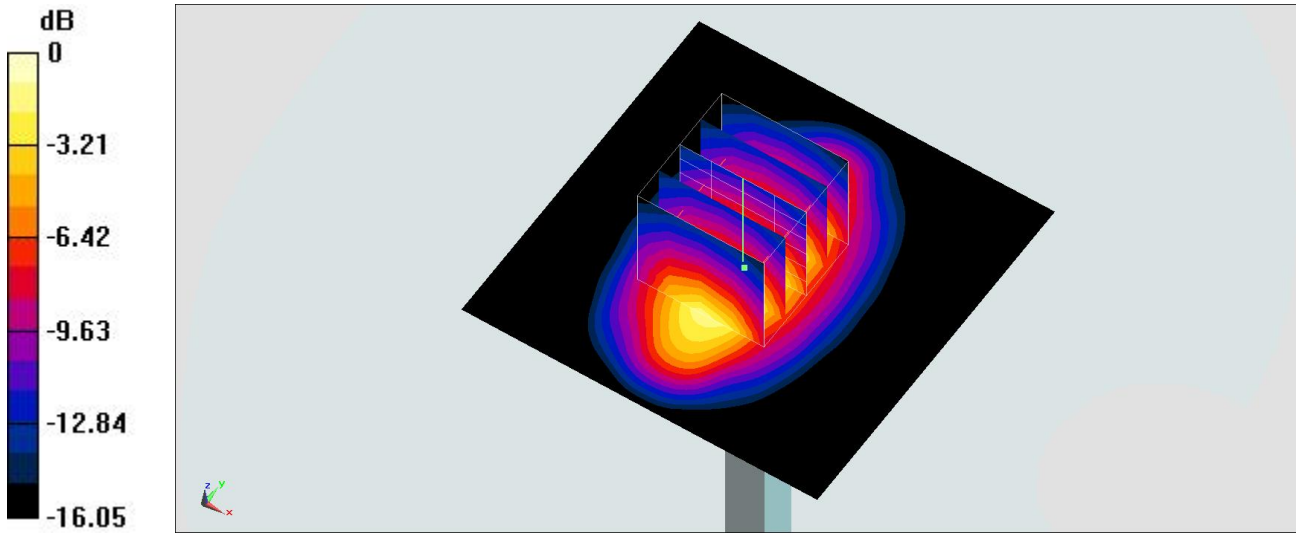

0 dB = 13.8 W/kg = 11.40 dBW/kg

System Check_Body_1750MHz

DUT: D1750V2-1068

Communication System: CW ; Frequency: 1750 MHz;Duty Cycle: 1:1
Medium: MSL_1750_170530 Medium parameters used: f = 1750 MHz; σ = 1.471 S/m; ε_r = 55.215; ρ = 1000 kg/m^3
Ambient Temperature：23.6 ℃； Liquid Temperature：22.6 ℃

DASY5 Configuration
- Probe: EX3DV4 - SN3931; ConvF(8.45, 8.45, 8.45); Calibrated: 2016/10/3;
- Sensor-Surface: 1.4mm (Mechanical Surface Detection)
- Electronics: DAE3 Sn577; Calibrated: 2016/9/28
- Phantom: SAM LEFT; Type: QD000P40CD; Serial: TP:1718
- Measurement SW: DASY52, Version 52.8 (8); SEMCAD X Version 14.6.10 (7373)

Pin=250mW/Area Scan (61x61x1): Interpolated grid: dx=1.500 mm, dy=1.500 mm
Maximum value of SAR (interpolated) = 14.0 W/kg

Pin=250mW/Zoom Scan (5x5x7)/Cube 0: Measurement grid: dx=8mm, dy=8mm, dz=5mm
Reference Value = 99.87 V/m; Power Drift = 0.06 dB
Peak SAR (extrapolated) = 16.7 W/kg
SAR(1 g) = 9.49 W/kg; SAR(10 g) = 5.14 W/kg
Maximum value of SAR (measured) = 14.3 W/kg

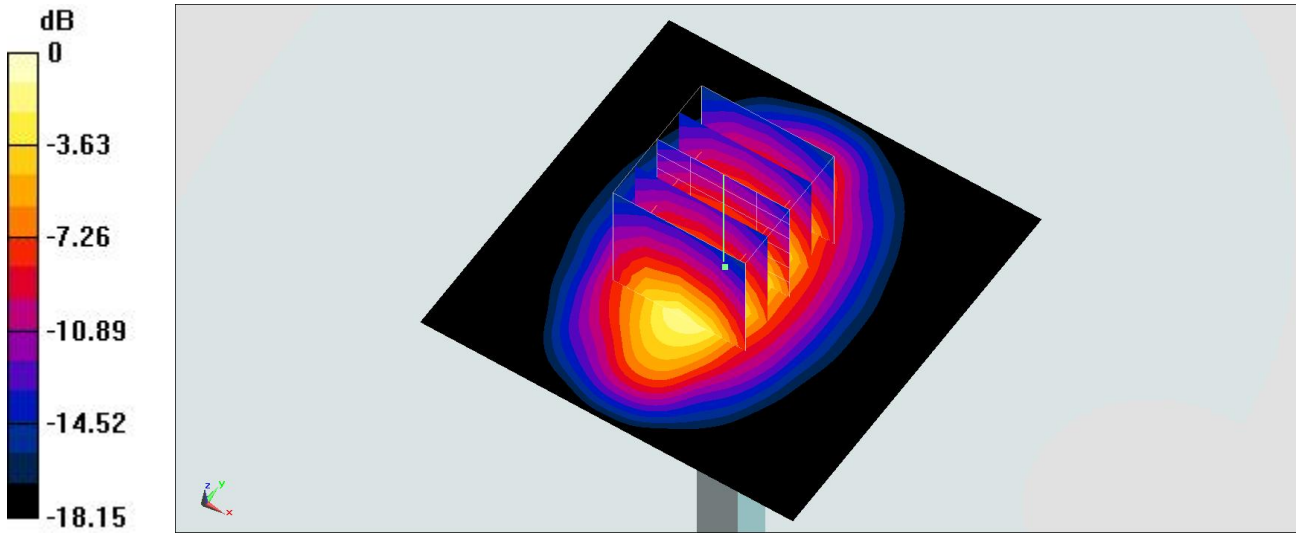

0 dB = 14.3 W/kg = 11.55 dBW/kg

System Check_Head_1900MHz

DUT: D1900V2-5d041

Communication System: CW ; Frequency: 1900 MHz;Duty Cycle: 1:1
Medium: HSL_1900_170526 Medium parameters used: f = 1900 MHz; σ = 1.432 S/m; ε_r = 40.626; ρ = 1000 kg/m^3
Ambient Temperature：23.3 ℃； Liquid Temperature：22.3 ℃

DASY5 Configuration
- Probe: EX3DV4 - SN7375; ConvF(7.92, 7.92, 7.92); Calibrated: 2016/12/8;
- Sensor-Surface: 1.4mm (Mechanical Surface Detection)
- Electronics: DAE4 Sn1305; Calibrated: 2016/12/15
- Phantom: SAM LEFT; Type: QD000P40CD; Serial: TP:1718
- Measurement SW: DASY52, Version 52.8 (8); SEMCAD X Version 14.6.10 (7373)

Pin=250mW/Area Scan (61x61x1): Interpolated grid: dx=1.500 mm, dy=1.500 mm
Maximum value of SAR (interpolated) = 14.8 W/kg

Pin=250mW/Zoom Scan (5x5x7)/Cube 0: Measurement grid: dx=8mm, dy=8mm, dz=5mm
Reference Value = 110.7 V/m; Power Drift = -0.09 dB
Peak SAR (extrapolated) = 19.0 W/kg
SAR(1 g) = 10.2 W/kg; SAR(10 g) = 5.22 W/kg
Maximum value of SAR (measured) = 15.5 W/kg

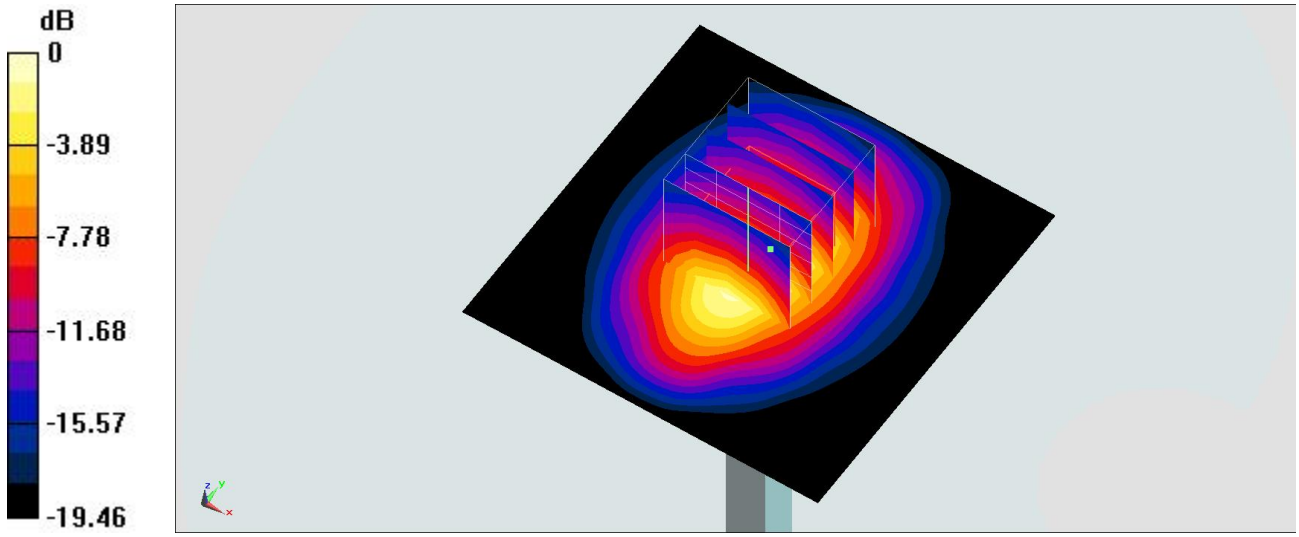

0 dB = 15.5 W/kg = 11.90 dBW/kg

System Check_Body_1900MHz

DUT: D1900V2-5d041

Communication System: CW; Frequency: 1900 MHz;Duty Cycle: 1:1
Medium: MSL_1900_170527 Medium parameters used: f = 1900 MHz; σ = 1.539 S/m; ε_r = 54.579; ρ = 1000 kg/m^3
Ambient Temperature：23.3 ℃； Liquid Temperature：22.3 ℃

DASY5 Configuration
- Probe: EX3DV4 - SN7375; ConvF(7.62, 7.62, 7.62); Calibrated: 2016/12/8;
- Sensor-Surface: 1.4mm (Mechanical Surface Detection)
- Electronics: DAE4 Sn1305; Calibrated: 2016/12/15
- Phantom: SAM_RIGHT; Type: QD000P40CD; Serial: 1719
- Measurement SW: DASY52, Version 52.8 (8); SEMCAD X Version 14.6.10 (7373)

Pin=250mW/Area Scan (61x61x1): Interpolated grid: dx=1.500 mm, dy=1.500 mm
Maximum value of SAR (interpolated) = 16.6 W/kg

Pin=250mW/Zoom Scan (5x5x7)/Cube 0: Measurement grid: dx=8mm, dy=8mm, dz=5mm
Reference Value = 102.5 V/m; Power Drift = 0.13 dB
Peak SAR (extrapolated) = 18.5 W/kg
SAR(1 g) = 10.2 W/kg; SAR(10 g) = 5.32 W/kg
Maximum value of SAR (measured) = 15.7 W/kg

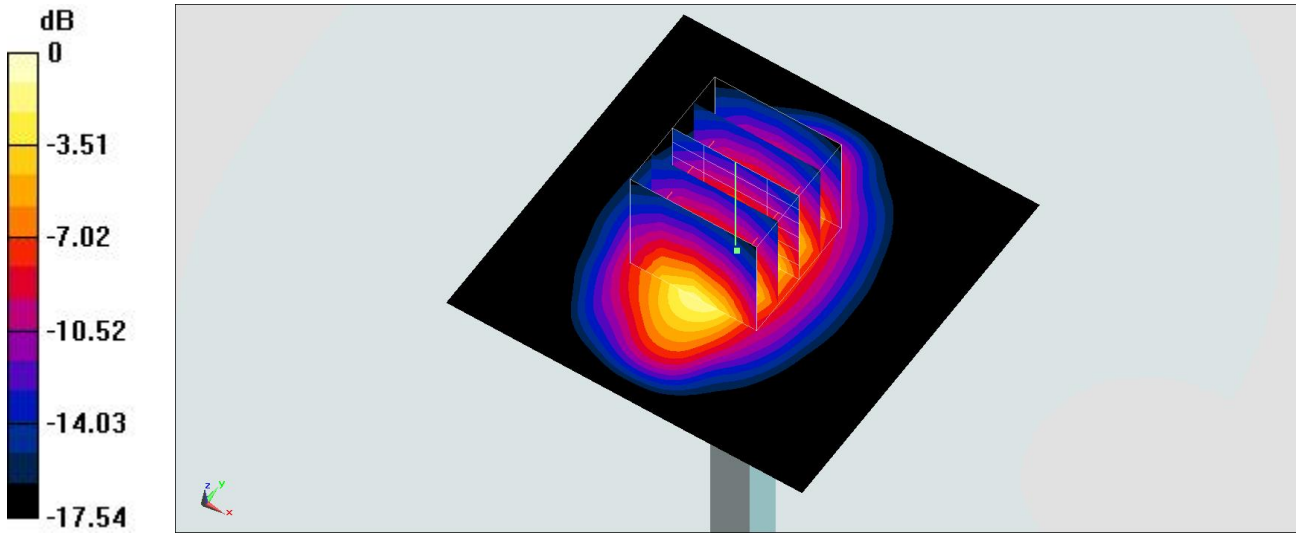

0 dB = 15.7 W/kg = 11.96 dBW/kg

System Check_Body_1900MHz

DUT: D1900V2-5d041

Communication System: CW; Frequency: 1900 MHz;Duty Cycle: 1:1
Medium: MSL_1900_170530 Medium parameters used: f = 1900 MHz; σ = 1.534 S/m; ε_r = 54.474; ρ = 1000 kg/m^3
Ambient Temperature：23.6 ℃； Liquid Temperature：22.6 ℃

DASY5 Configuration
- Probe: EX3DV4 - SN3931; ConvF(8.14, 8.14, 8.14); Calibrated: 2016/10/3;
- Sensor-Surface: 1.4mm (Mechanical Surface Detection)
- Electronics: DAE3 Sn577; Calibrated: 2016/9/28
- Phantom: SAM LEFT; Type: QD000P40CD; Serial: TP:1718
- Measurement SW: DASY52, Version 52.8 (8); SEMCAD X Version 14.6.10 (7373)

Pin=250mW/Area Scan (61x61x1): Interpolated grid: dx=1.500 mm, dy=1.500 mm
Maximum value of SAR (interpolated) = 15.6 W/kg

Pin=250mW/Zoom Scan (5x5x7)/Cube 0: Measurement grid: dx=8mm, dy=8mm, dz=5mm
Reference Value = 105.4 V/m; Power Drift = -0.11 dB
Peak SAR (extrapolated) = 18.1 W/kg
SAR(1 g) = 10 W/kg; SAR(10 g) = 5.25 W/kg
Maximum value of SAR (measured) = 15.4 W/kg

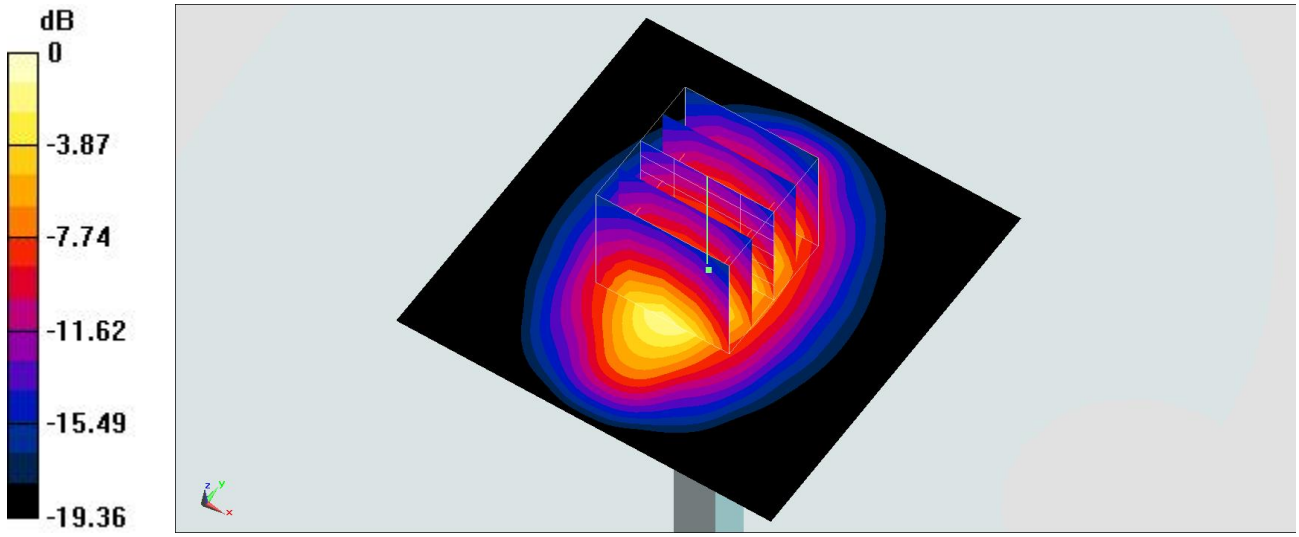

0 dB = 15.4 W/kg = 11.88 dBW/kg

System Check_Head_2300MHz

DUT: D2300V2-1006

Communication System: CW ; Frequency: 2300 MHz;Duty Cycle: 1:1
Medium: HSL_2300_170525 Medium parameters used: f = 2300 MHz; σ = 1.662 S/m; ε_r = 39.242; ρ = 1000 kg/m^3
Ambient Temperature：23.3 ℃； Liquid Temperature：22.3 ℃

DASY5 Configuration
- Probe: EX3DV4 - SN7375; ConvF(7.57, 7.57, 7.57); Calibrated: 2016/12/8;
- Sensor-Surface: 1.4mm (Mechanical Surface Detection)
- Electronics: DAE4 Sn1305; Calibrated: 2016/12/15
- Phantom: SAM_RIGHT; Type: QD000P40CD; Serial: 1719
- Measurement SW: DASY52, Version 52.8 (8); SEMCAD X Version 14.6.10 (7373)

Pin=250mW/Area Scan (71x71x1): Interpolated grid: dx=1.200 mm, dy=1.200 mm
Maximum value of SAR (interpolated) = 19.4 W/kg

Pin=250mW/Zoom Scan (7x7x7)/Cube 0: Measurement grid: dx=5mm, dy=5mm, dz=5mm
Reference Value = 108.9 V/m; Power Drift = -0.12 dB
Peak SAR (extrapolated) = 25.2 W/kg
SAR(1 g) = 12.9 W/kg; SAR(10 g) = 6.08 W/kg
Maximum value of SAR (measured) = 19.4 W/kg

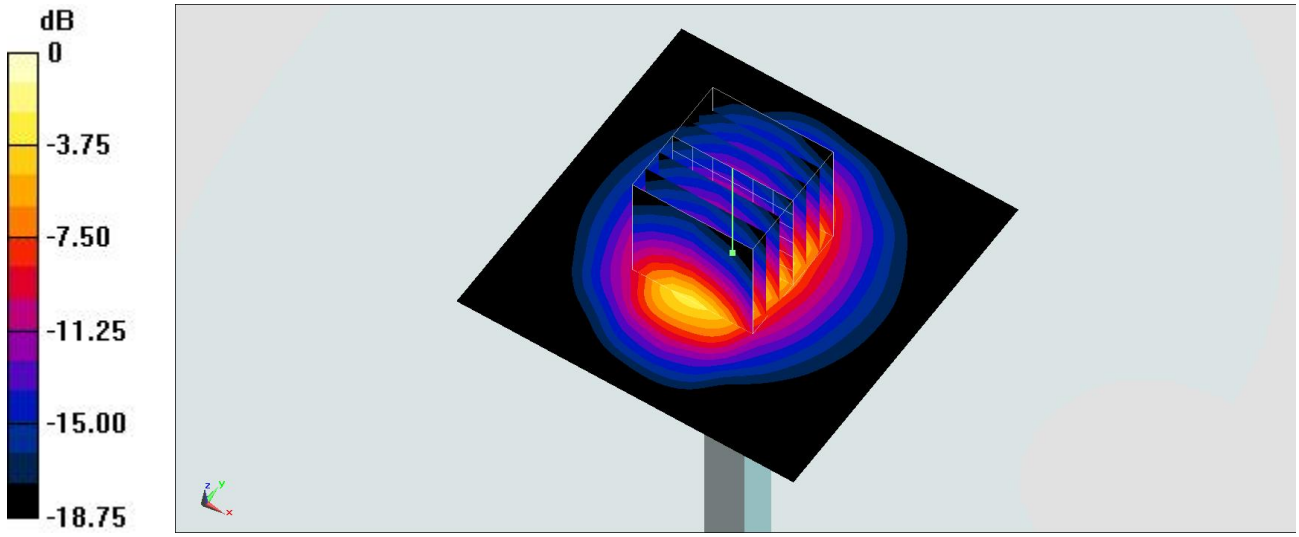

0 dB = 19.4 W/kg = 12.88 dBW/kg

System Check_Body_2300MHz

DUT: D2300V2-1006

Communication System: CW ; Frequency: 2300 MHz;Duty Cycle: 1:1
Medium: MSL_2300_170529 Medium parameters used: f = 2300 MHz; σ = 1.737 S/m; ε_r = 55.221; ρ = 1000 kg/m^3
Ambient Temperature：23.5 ℃； Liquid Temperature：22.5 ℃

DASY5 Configuration
- Probe: EX3DV4 - SN3931; ConvF(7.96, 7.96, 7.96); Calibrated: 2016/10/3;
- Sensor-Surface: 1.4mm (Mechanical Surface Detection)
- Electronics: DAE3 Sn577; Calibrated: 2016/9/28
- Phantom: SAM LEFT; Type: QD000P40CD; Serial: TP:1718
- Measurement SW: DASY52, Version 52.8 (8); SEMCAD X Version 14.6.10 (7373)

Pin=250mW/Area Scan (71x71x1): Interpolated grid: dx=1.200 mm, dy=1.200 mm
Maximum value of SAR (interpolated) = 18.0 W/kg

Pin=250mW/Zoom Scan (7x7x7)/Cube 0: Measurement grid: dx=5mm, dy=5mm, dz=5mm
Reference Value = 98.33 V/m; Power Drift = 0.12 dB
Peak SAR (extrapolated) = 23.0 W/kg
SAR(1 g) = 11.8 W/kg; SAR(10 g) = 5.71 W/kg
Maximum value of SAR (measured) = 19.1 W/kg

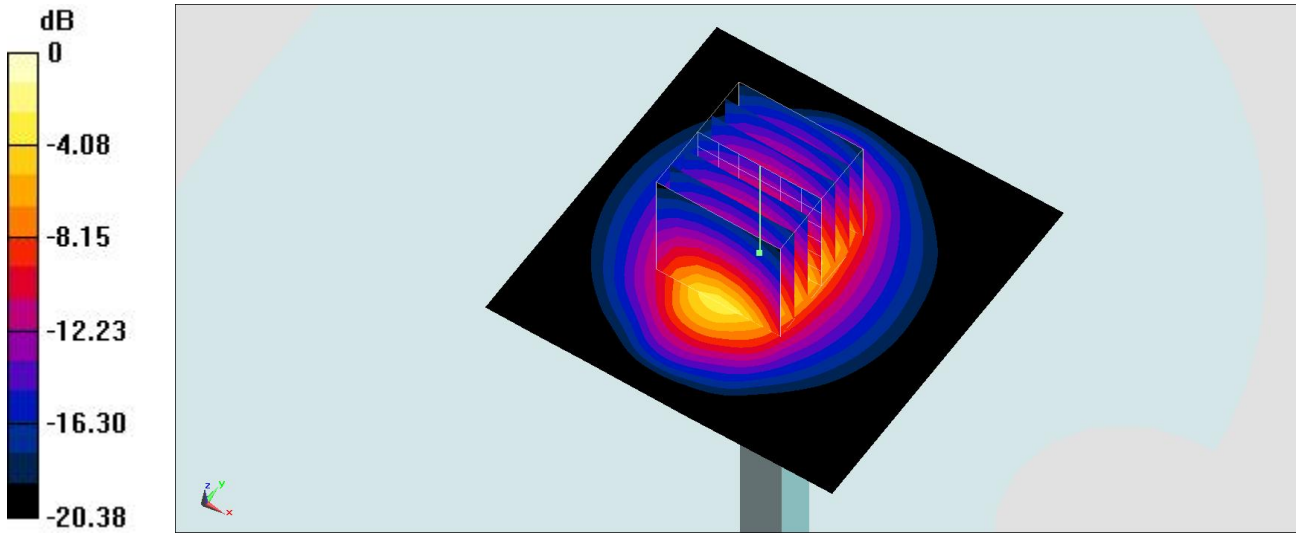

0 dB = 19.1 W/kg = 12.81 dBW/kg

System Check_Head_2450MHz

DUT: D2450V2-736

Communication System: CW; Frequency: 2450 MHz;Duty Cycle: 1:1
Medium: HSL_2450_170525 Medium parameters used: f = 2450 MHz; σ = 1.835 S/m; ε_r = 38.629; ρ = 1000 kg/m^3
Ambient Temperature：23.3 ℃； Liquid Temperature：22.3 ℃

DASY5 Configuration
- Probe: EX3DV4 - SN7375; ConvF(7.27, 7.27, 7.27); Calibrated: 2016/12/8;
- Sensor-Surface: 1.4mm (Mechanical Surface Detection)
- Electronics: DAE4 Sn1305; Calibrated: 2016/12/15
- Phantom: SAM_RIGHT; Type: QD000P40CD; Serial: 1719
- Measurement SW: DASY52, Version 52.8 (8); SEMCAD X Version 14.6.10 (7373)

Pin=250mW/Area Scan (61x61x1): Interpolated grid: dx=1.200 mm, dy=1.200 mm
Maximum value of SAR (interpolated) = 22.8 W/kg

Pin=250mW/Zoom Scan (7x7x7)/Cube 0: Measurement grid: dx=5mm, dy=5mm, dz=5mm
Reference Value = 109.7 V/m; Power Drift = 0.04 dB
Peak SAR (extrapolated) = 28.8 W/kg
SAR(1 g) = 13.9 W/kg; SAR(10 g) = 6.34 W/kg
Maximum value of SAR (measured) = 21.6 W/kg

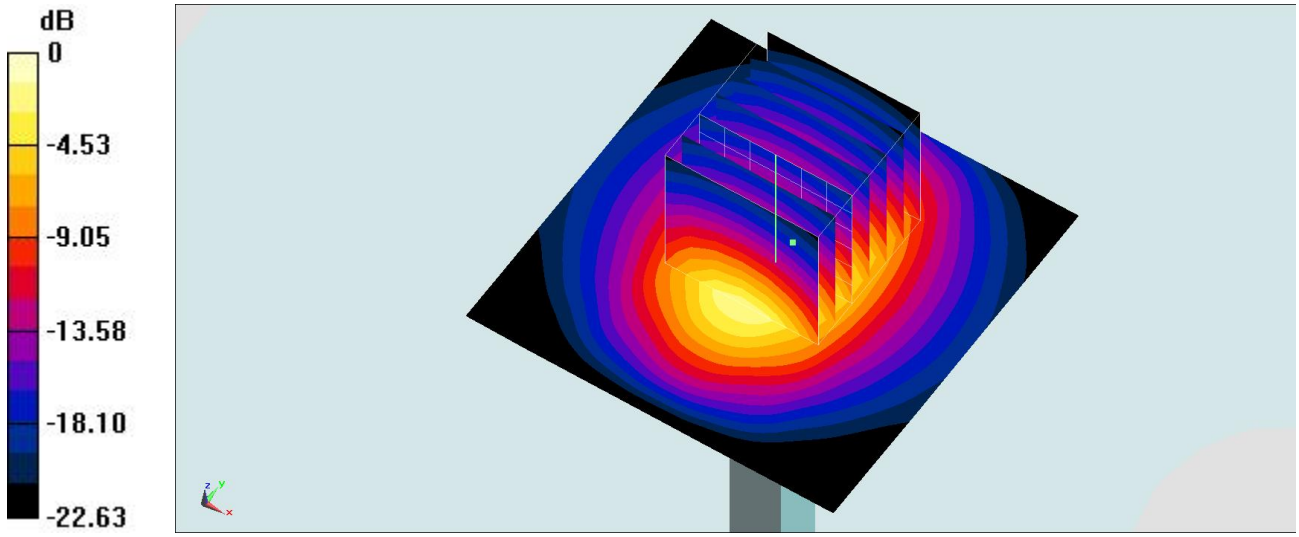

0 dB = 21.6 W/kg = 13.34 dBW/kg

System Check_Body_2450MHz

DUT: D2450V2-736

Communication System: CW; Frequency: 2450 MHz;Duty Cycle: 1:1
Medium: MSL_2450_170529 Medium parameters used: f = 2450 MHz; σ = 1.943 S/m; ε_r = 54.731; ρ = 1000 kg/m^3
Ambient Temperature：23.5 ℃； Liquid Temperature：22.5 ℃

DASY5 Configuration
- Probe: EX3DV4 - SN3931; ConvF(7.73, 7.73, 7.73); Calibrated: 2016/10/3;
- Sensor-Surface: 1.4mm (Mechanical Surface Detection)
- Electronics: DAE3 Sn577; Calibrated: 2016/9/28
- Phantom: SAM LEFT; Type: QD000P40CD; Serial: TP:1718
- Measurement SW: DASY52, Version 52.8 (8); SEMCAD X Version 14.6.10 (7373)

Pin=250mW/Area Scan (61x61x1): Interpolated grid: dx=1.200 mm, dy=1.200 mm
Maximum value of SAR (interpolated) = 20.4 W/kg

Pin=250mW/Zoom Scan (7x7x7)/Cube 0: Measurement grid: dx=5mm, dy=5mm, dz=5mm
Reference Value = 106.8 V/m; Power Drift = -0.04 dB
Peak SAR (extrapolated) = 24.3 W/kg
SAR(1 g) = 12.1 W/kg; SAR(10 g) = 5.77 W/kg
Maximum value of SAR (measured) = 19.8 W/kg

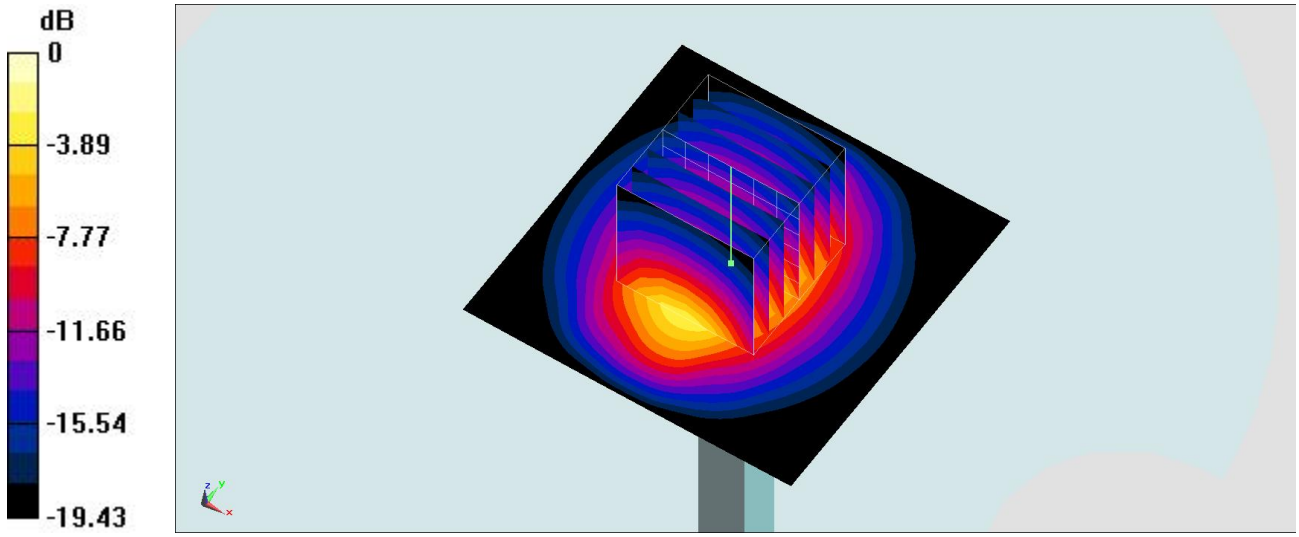

0 dB = 19.8 W/kg = 12.97 dBW/kg

System Check_Head_2600MHz

DUT: D2600V2-1008

Communication System: CW; Frequency: 2600 MHz;Duty Cycle: 1:1
Medium: HSL_2600_170525 Medium parameters used: f = 2600 MHz; σ = 2.012 S/m; ε_r = 38.002; ρ = 1000 kg/m^3
Ambient Temperature：23.3 ℃； Liquid Temperature：22.3 ℃

DASY5 Configuration
- Probe: EX3DV4 - SN7375; ConvF(7.25, 7.25, 7.25); Calibrated: 2016/12/8;
- Sensor-Surface: 1.4mm (Mechanical Surface Detection)
- Electronics: DAE4 Sn1305; Calibrated: 2016/12/15
- Phantom: SAM_RIGHT; Type: QD000P40CD; Serial: 1719
- Measurement SW: DASY52, Version 52.8 (8); SEMCAD X Version 14.6.10 (7373)

Pin=250mW/Area Scan (61x61x1): Interpolated grid: dx=1.200 mm, dy=1.200 mm
Maximum value of SAR (interpolated) = 24.0 W/kg

Pin=250mW/Zoom Scan (7x7x7)/Cube 0: Measurement grid: dx=5mm, dy=5mm, dz=5mm
Reference Value = 106.0 V/m; Power Drift = -0.00 dB
Peak SAR (extrapolated) = 29.3 W/kg
SAR(1 g) = 14.4 W/kg; SAR(10 g) = 6.69 W/kg
Maximum value of SAR (measured) = 23.8 W/kg

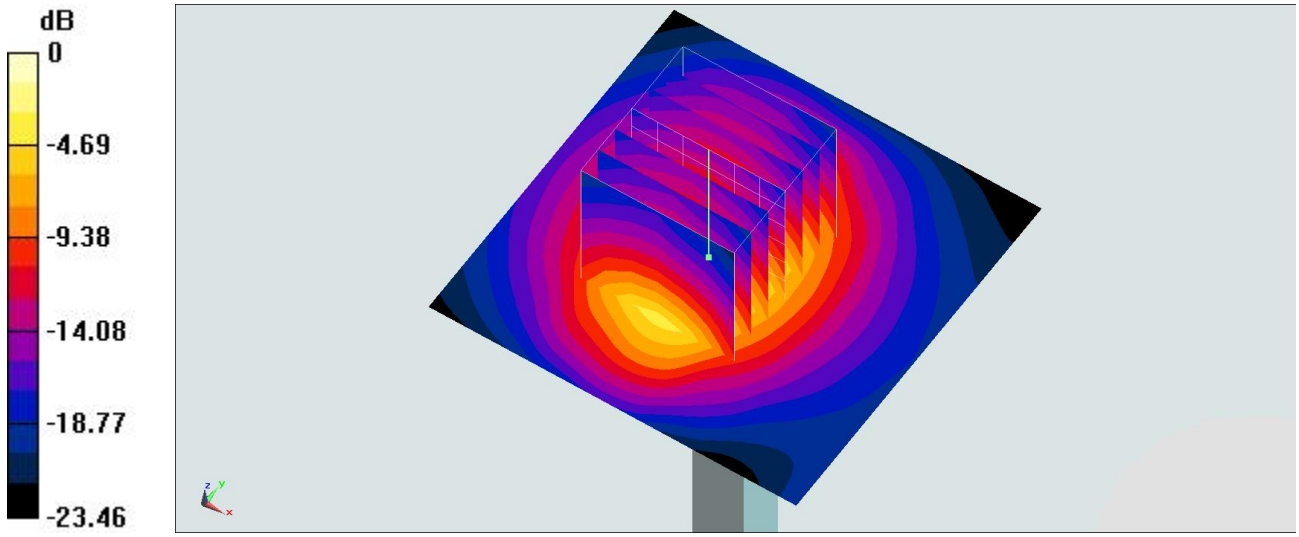

0 dB = 23.8 W/kg = 13.77 dBW/kg

System Check_Body_2600MHz

DUT: D2600V2-1008

Communication System: CW; Frequency: 2600 MHz;Duty Cycle: 1:1
Medium: MSL_2600_170529 Medium parameters used: f = 2600 MHz; σ = 2.149 S/m; ε_r = 54.206; ρ = 1000 kg/m^3
Ambient Temperature：23.5 ℃； Liquid Temperature：22.5 ℃

DASY5 Configuration
- Probe: EX3DV4 - SN3931; ConvF(7.46, 7.46, 7.46); Calibrated: 2016/10/3;
- Sensor-Surface: 1.4mm (Mechanical Surface Detection)
- Electronics: DAE3 Sn577; Calibrated: 2016/9/28
- Phantom: SAM LEFT; Type: QD000P40CD; Serial: TP:1718
- Measurement SW: DASY52, Version 52.8 (8); SEMCAD X Version 14.6.10 (7373)

Pin=250mW/Area Scan (61x61x1): Interpolated grid: dx=1.200 mm, dy=1.200 mm
Maximum value of SAR (interpolated) = 21.7 W/kg

Pin=250mW/Zoom Scan (7x7x7)/Cube 0: Measurement grid: dx=5mm, dy=5mm, dz=5mm
Reference Value = 99.92 V/m; Power Drift = 0.03 dB
Peak SAR (extrapolated) = 29.4 W/kg
SAR(1 g) = 13.8 W/kg; SAR(10 g) = 6.18 W/kg
Maximum value of SAR (measured) = 21.5 W/kg

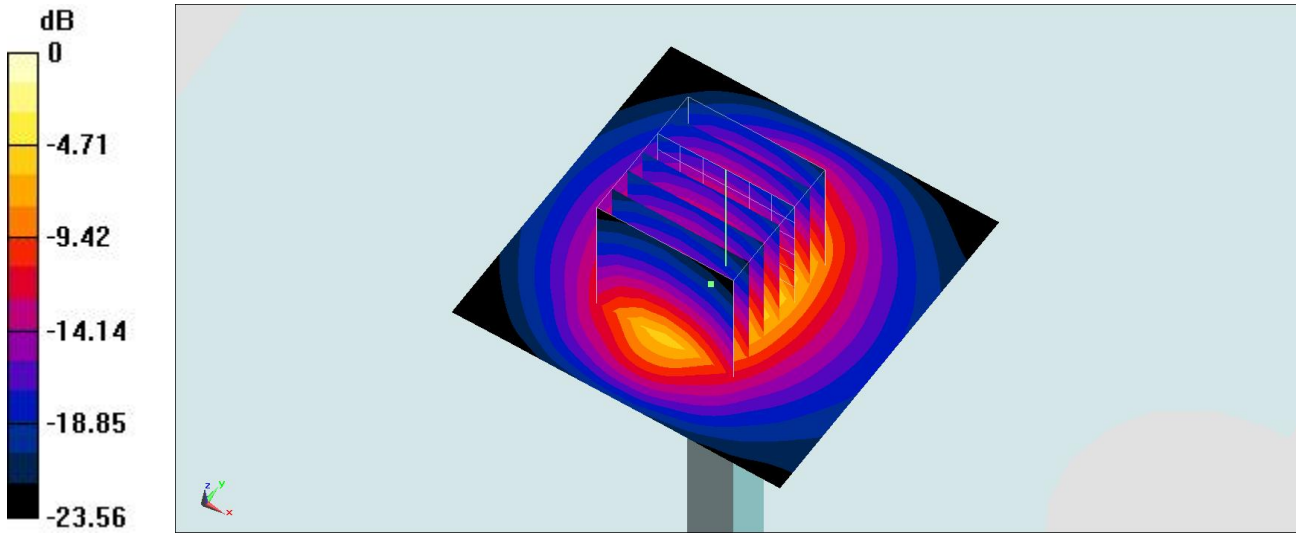

0 dB = 21.5 W/kg = 13.32 dBW/kg

System Check_Head_5250MHz

DUT: D5GHzV2-1128

Communication System: CW; Frequency: 5250 MHz;Duty Cycle: 1:1
Medium: HSL_5G_170530 Medium parameters used: f = 5250 MHz; σ = 4.493 S/m; ε_r = 35.431; ρ = 1000 kg/m^3
Ambient Temperature：23.2 ℃； Liquid Temperature：22.2 ℃

DASY5 Configuration
- Probe: EX3DV4 - SN3931; ConvF(5.38, 5.38, 5.38); Calibrated: 2016/10/3;
- Sensor-Surface: 1.4mm (Mechanical Surface Detection)
- Electronics: DAE3 Sn577; Calibrated: 2016/9/28
- Phantom: SAM LEFT; Type: QD000P40CD; Serial: TP:1718
- Measurement SW: DASY52, Version 52.8 (8); SEMCAD X Version 14.6.10 (7373)

Pin=100mW/Area Scan (71x71x1): Interpolated grid: dx=1.000 mm, dy=1.000 mm
Maximum value of SAR (interpolated) = 16.4 W/kg

Pin=100mW/Zoom Scan (7x7x7)/Cube 0: Measurement grid: dx=4mm, dy=4mm, dz=1.4mm
Reference Value = 66.76 V/m; Power Drift = -0.04 dB
Peak SAR (extrapolated) = 25.0 W/kg
SAR(1 g) = 7.2 W/kg; SAR(10 g) = 2.07 W/kg
Maximum value of SAR (measured) = 16.6 W/kg

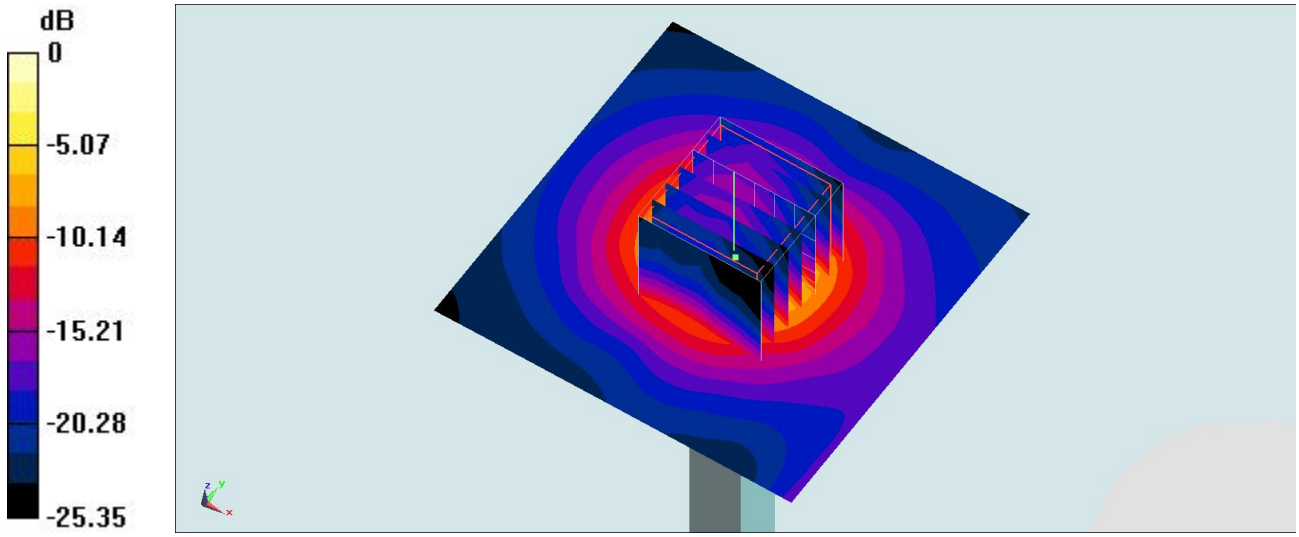

0 dB = 16.6 W/kg = 12.20 dBW/kg

System Check_Body_5250MHz

DUT: D5GHzV2-1006

Communication System: CW; Frequency: 5250 MHz;Duty Cycle: 1:1
Medium: MSL_5G_170529 Medium parameters used: f = 5250 MHz; σ = 5.442 S/m; ε_r = 46.777; ρ = 1000 kg/m^3
Ambient Temperature：23.5 ℃； Liquid Temperature：22.5 ℃

DASY5 Configuration
- Probe: EX3DV4 - SN3931; ConvF(4.57, 4.57, 4.57); Calibrated: 2016/10/3;
- Sensor-Surface: 1.4mm (Mechanical Surface Detection)
- Electronics: DAE3 Sn577; Calibrated: 2016/9/28
- Phantom: SAM_RIGHT; Type: QD000P40CD; Serial: 1719
- Measurement SW: DASY52, Version 52.8 (8); SEMCAD X Version 14.6.10 (7373)

Pin=100mW/Area Scan (71x71x1): Interpolated grid: dx=1.000 mm, dy=1.000 mm
Maximum value of SAR (interpolated) = 19.2 W/kg

Pin=100mW/Zoom Scan (7x7x7)/Cube 0: Measurement grid: dx=4mm, dy=4mm, dz=1.4mm
Reference Value = 66.31 V/m; Power Drift = 0.18 dB
Peak SAR (extrapolated) = 32.8 W/kg
SAR(1 g) = 8.07 W/kg; SAR(10 g) = 2.23 W/kg
Maximum value of SAR (measured) = 20.0 W/kg

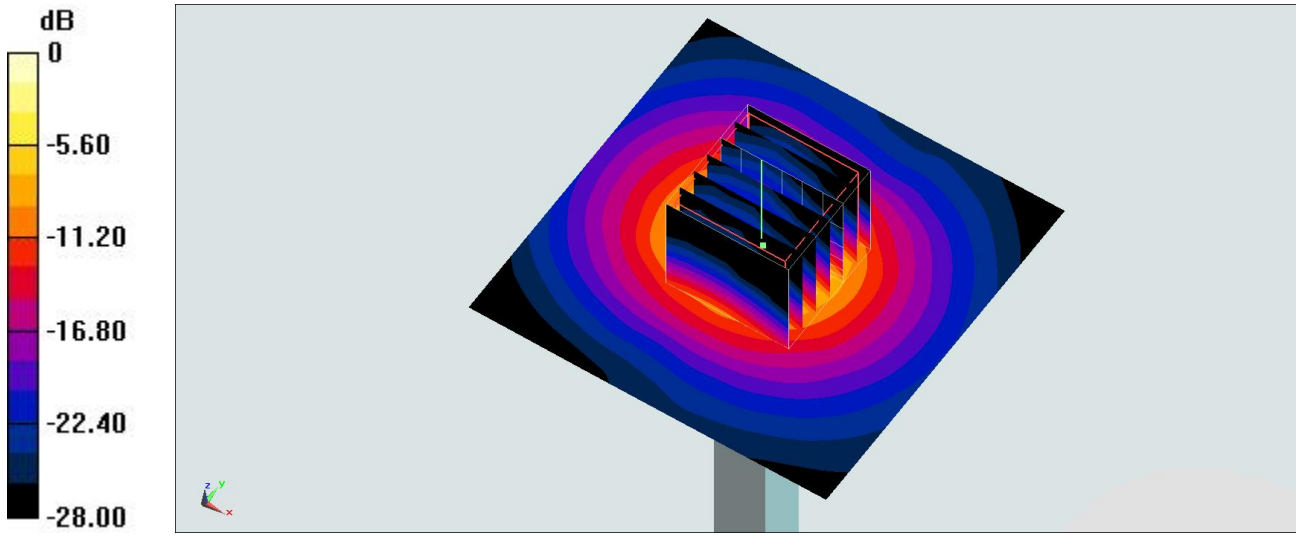

0 dB = 20.0 W/kg = 13.01 dBW/kg

System Check_Head_5600MHz

DUT: D5GHzV2-1128

Communication System: CW; Frequency: 5600 MHz;Duty Cycle: 1:1
Medium: HSL_5G_170530 Medium parameters used: f = 5600 MHz; σ = 4.823 S/m; ε_r = 34.97; ρ = 1000 kg/m^3
Ambient Temperature：23.2 ℃； Liquid Temperature：22.2 ℃

DASY5 Configuration
- Probe: EX3DV4 - SN3931; ConvF(4.68, 4.68, 4.68); Calibrated: 2016/10/3;
- Sensor-Surface: 1.4mm (Mechanical Surface Detection)
- Electronics: DAE3 Sn577; Calibrated: 2016/9/28
- Phantom: SAM LEFT; Type: QD000P40CD; Serial: TP:1718
- Measurement SW: DASY52, Version 52.8 (8); SEMCAD X Version 14.6.10 (7373)

Pin=100mW/Area Scan (71x71x1): Interpolated grid: dx=1.000 mm, dy=1.000 mm
Maximum value of SAR (interpolated) = 20.8 W/kg

Pin=100mW/Zoom Scan (7x7x7)/Cube 0: Measurement grid: dx=4mm, dy=4mm, dz=1.4mm
Reference Value = 72.92 V/m; Power Drift = -0.10 dB
Peak SAR (extrapolated) = 34.8 W/kg
SAR(1 g) = 8.37 W/kg; SAR(10 g) = 2.32 W/kg
Maximum value of SAR (measured) = 21.3 W/kg

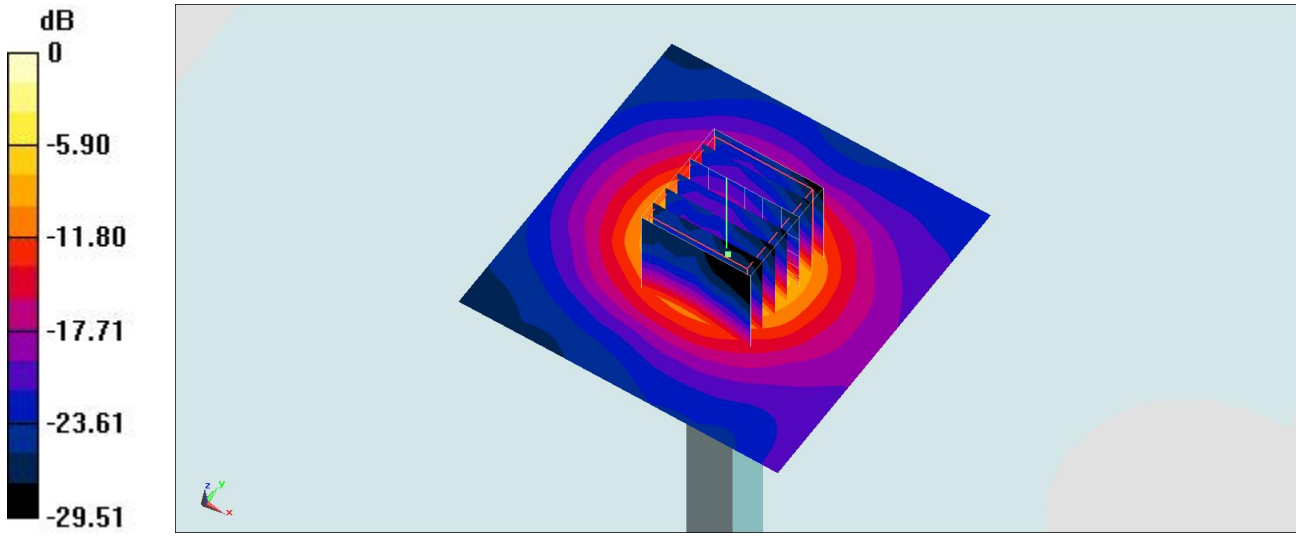

0 dB = 21.3 W/kg = 13.28 dBW/kg

System Check_Body_5600MHz

DUT: D5GHzV2-1006

Communication System: CW; Frequency: 5600 MHz;Duty Cycle: 1:1
Medium: MSL_5G_170529 Medium parameters used: f = 5600 MHz; σ = 5.9 S/m; ε_r = 46.172; ρ = 1000 kg/m^3
Ambient Temperature：23.5 ℃； Liquid Temperature：22.5 ℃

DASY5 Configuration
- Probe: EX3DV4 - SN3931; ConvF(3.71, 3.71, 3.71); Calibrated: 2016/10/3;
- Sensor-Surface: 1.4mm (Mechanical Surface Detection)
- Electronics: DAE3 Sn577; Calibrated: 2016/9/28
- Phantom: SAM_RIGHT; Type: QD000P40CD; Serial: 1719
- Measurement SW: DASY52, Version 52.8 (8); SEMCAD X Version 14.6.10 (7373)

Pin=100mW/Area Scan (71x71x1): Interpolated grid: dx=1.000 mm, dy=1.000 mm
Maximum value of SAR (interpolated) = 20.6 W/kg

Pin=100mW/Zoom Scan (7x7x7)/Cube 0: Measurement grid: dx=4mm, dy=4mm, dz=1.4mm
Reference Value = 71.52 V/m; Power Drift = -0.10 dB
Peak SAR (extrapolated) = 33.8 W/kg
SAR(1 g) = 8.34 W/kg; SAR(10 g) = 2.25 W/kg
Maximum value of SAR (measured) = 21.0 W/kg

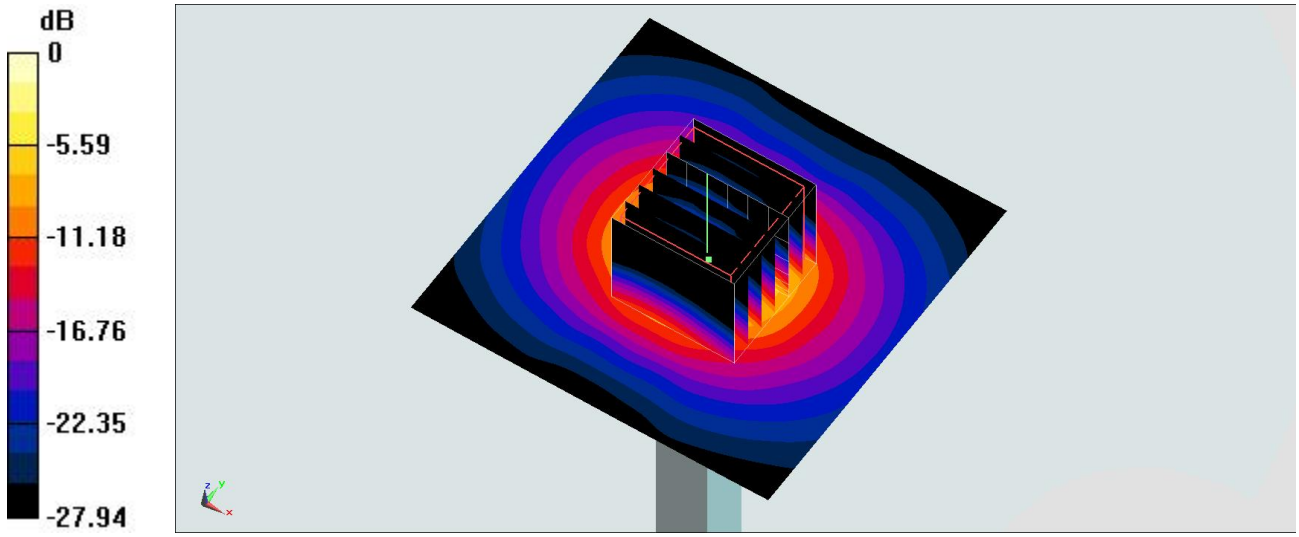

0 dB = 21.0 W/kg = 13.22 dBW/kg

System Check_Head_5750MHz

DUT: D5GHzV2-1128

Communication System: CW; Frequency: 5750 MHz;Duty Cycle: 1:1
Medium: HSL_5G_170530 Medium parameters used: f = 5750 MHz; σ = 4.969 S/m; ε_r = 34.777; ρ = 1000 kg/m^3
Ambient Temperature：23.2 ℃； Liquid Temperature：22.2 ℃

DASY5 Configuration
- Probe: EX3DV4 - SN3931; ConvF(4.84, 4.84, 4.84); Calibrated: 2016/10/3;
- Sensor-Surface: 1.4mm (Mechanical Surface Detection)
- Electronics: DAE3 Sn577; Calibrated: 2016/9/28
- Phantom: SAM LEFT; Type: QD000P40CD; Serial: TP:1718
- Measurement SW: DASY52, Version 52.8 (8); SEMCAD X Version 14.6.10 (7373)

Pin=100mW/Area Scan (71x71x1): Interpolated grid: dx=1.000 mm, dy=1.000 mm
Maximum value of SAR (interpolated) = 18.1 W/kg

Pin=100mW/Zoom Scan (7x7x7)/Cube 0: Measurement grid: dx=4mm, dy=4mm, dz=1.4mm
Reference Value = 66.49 V/m; Power Drift = 0.07 dB
Peak SAR (extrapolated) = 36.2 W/kg
SAR(1 g) = 7.68 W/kg; SAR(10 g) = 2.11 W/kg
Maximum value of SAR (measured) = 20.2 W/kg

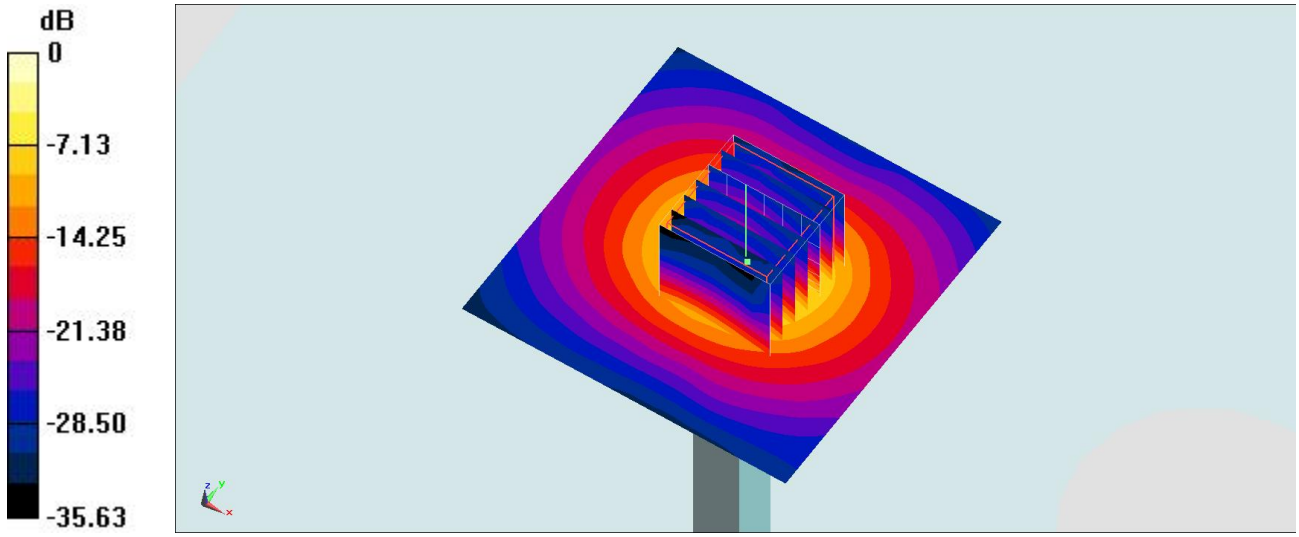

0 dB = 20.2 W/kg = 13.05 dBW/kg

System Check_Body_5750MHz

DUT: D5GHzV2-1006

Communication System: CW; Frequency: 5750 MHz;Duty Cycle: 1:1
Medium: MSL_5G_170529 Medium parameters used: f = 5750 MHz; σ = 6.102 S/m; ε_r = 45.942; ρ = 1000 kg/m^3
Ambient Temperature：23.5 ℃； Liquid Temperature：22.5 ℃

DASY5 Configuration
- Probe: EX3DV4 - SN3931; ConvF(4.01, 4.01, 4.01); Calibrated: 2016/10/3;
- Sensor-Surface: 1.4mm (Mechanical Surface Detection)
- Electronics: DAE3 Sn577; Calibrated: 2016/9/28
- Phantom: SAM_RIGHT; Type: QD000P40CD; Serial: 1719
- Measurement SW: DASY52, Version 52.8 (8); SEMCAD X Version 14.6.10 (7373)

Pin=100mW/Area Scan (71x71x1): Interpolated grid: dx=1.000 mm, dy=1.000 mm
Maximum value of SAR (interpolated) = 19.3 W/kg

Pin=100mW/Zoom Scan (7x7x7)/Cube 0: Measurement grid: dx=4mm, dy=4mm, dz=1.4mm
Reference Value = 68.99 V/m; Power Drift = 0.00 dB
Peak SAR (extrapolated) = 34.4 W/kg
SAR(1 g) = 7.88 W/kg; SAR(10 g) = 2.13 W/kg
Maximum value of SAR (measured) = 20.4 W/kg

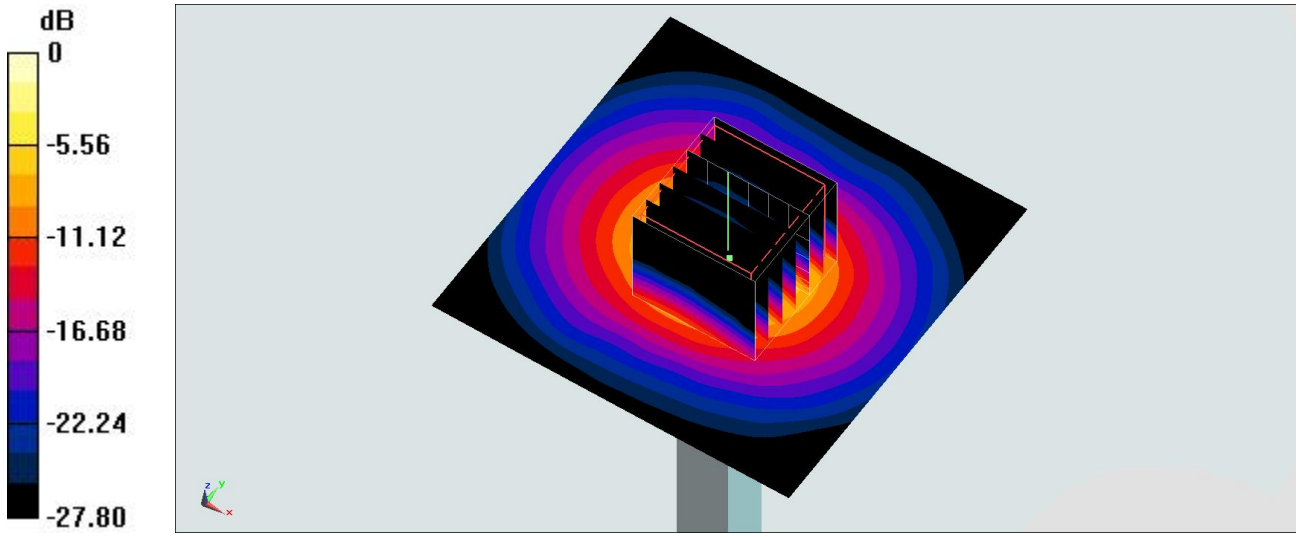

0 dB = 20.3 W/kg = 13.07 dBW/kg