System Check_Head_750MHz

DUT: D750V3-1012

Communication System: CW ; Frequency: 750 MHz;Duty Cycle: 1:1
Medium: HSL_750_171230 Medium parameters used: f = 750 MHz; σ = 0.9 S/m; ε_r = 40.782; ρ = 1000 kg/m^3
Ambient Temperature：23.1 ℃; Liquid Temperature：22.1 ℃

DASY5 Configuration
- Probe: EX3DV4 - SN7306; ConvF(9.96, 9.96, 9.96); Calibrated: 2017/7/24;
- Sensor-Surface: 1.4mm (Mechanical Surface Detection)
- Electronics: DAE4 Sn853; Calibrated: 2017/7/19
- Phantom: SAM_Right; Type: QD000P40CD; Serial: S/N:1796
- Measurement SW: DASY52, Version 52.8 (8); SEMCAD X Version 14.6.10 (7373)

Pin=250mW/Area Scan (61x61x1): Interpolated grid: dx=1.500 mm, dy=1.500 mm
Maximum value of SAR (interpolated) = 2.59 W/kg

Pin=250mW/Zoom Scan (5x5x7)/Cube 0: Measurement grid: dx=8mm, dy=8mm, dz=5mm
Reference Value = 52.70 V/m; Power Drift = 0.05 dB
Peak SAR (extrapolated) = 2.97 W/kg
SAR(1 g) = 2.09 W/kg; SAR(10 g) = 1.42 W/kg
Maximum value of SAR (measured) = 2.58 W/kg

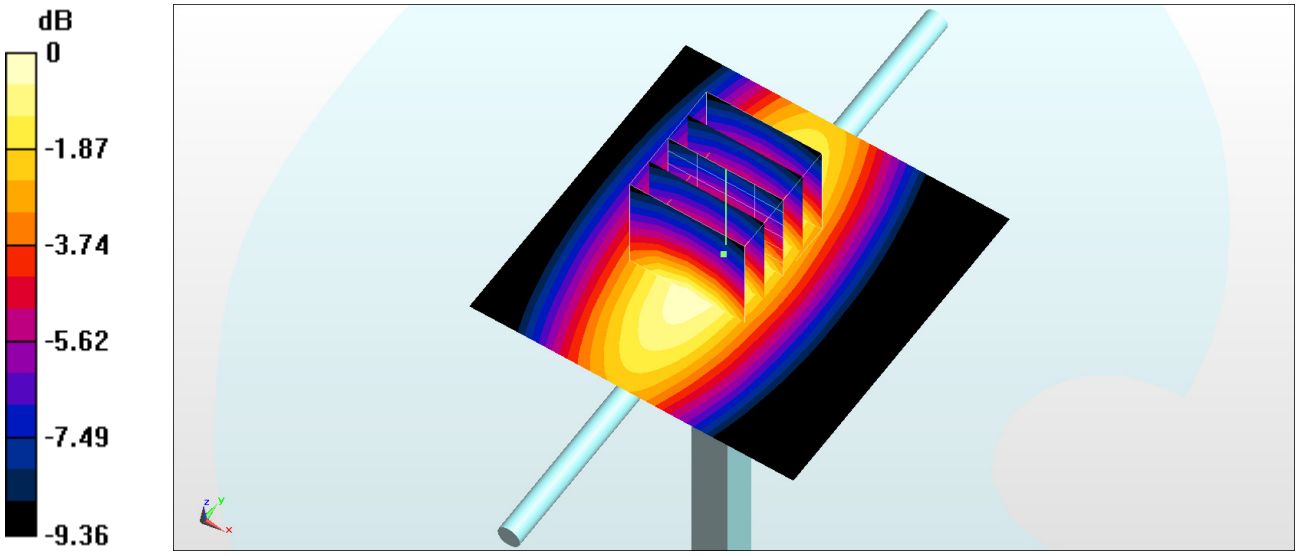

0 dB = 2.58 W/kg = 4.12 dBW/kg

System Check_Body_750MHz

DUT: D750V3-1012

Communication System: CW ; Frequency: 750 MHz;Duty Cycle: 1:1
Medium: MSL_750_180109 Medium parameters used: f = 750 MHz; σ = 0.976 S/m; ε_r = 54.334; ρ = 1000 kg/m^3
Ambient Temperature：23.3 ℃; Liquid Temperature：22.3 ℃

DASY5 Configuration
- Probe: EX3DV4 - SN3931; ConvF(10.34, 10.34, 10.34); Calibrated: 2017/9/29;
- Sensor-Surface: 1.4mm (Mechanical Surface Detection)
- Electronics: DAE4 Sn1399; Calibrated: 2017/11/16
- Phantom: SAM_Right; Type: QD000P40CD; Serial: S/N:1796
- Measurement SW: DASY52, Version 52.8 (8); SEMCAD X Version 14.6.10 (7373)

Pin=250mW/Area Scan (61x61x1): Interpolated grid: dx=1.500 mm, dy=1.500 mm
Maximum value of SAR (interpolated) = 3.22 W/kg

Pin=250mW/Zoom Scan (5x5x7)/Cube 0: Measurement grid: dx=8mm, dy=8mm, dz=5mm
Reference Value = 57.28 V/m; Power Drift = 0.02 dB
Peak SAR (extrapolated) = 3.41 W/kg
SAR(1 g) = 2.31 W/kg; SAR(10 g) = 1.55 W/kg
Maximum value of SAR (measured) = 2.90 W/kg

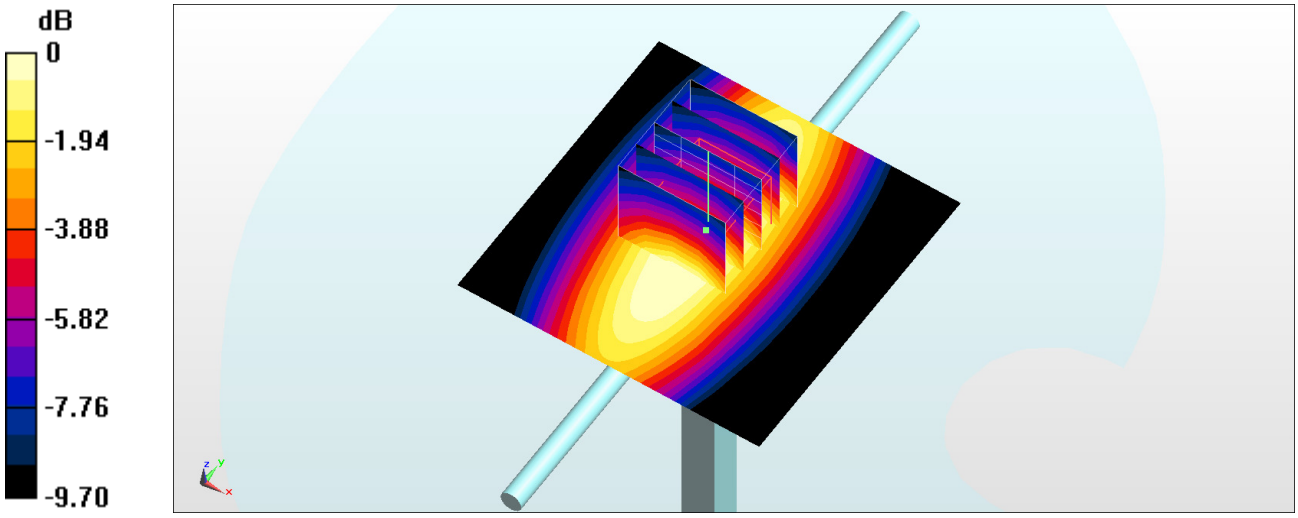

0 dB = 2.90 W/kg = 4.62 dBW/kg

System Check_Body_750MHz

DUT: D750V3-1012

Communication System: CW ; Frequency: 750 MHz;Duty Cycle: 1:1
Medium: MSL_750_180129 Medium parameters used: f = 750 MHz; σ = 0.972 S/m; ε_r = 53.878; ρ = 1000 kg/m^3
Ambient Temperature：23.5 ℃; Liquid Temperature：22.5 ℃

DASY5 Configuration
- Probe: EX3DV4 - SN3931; ConvF(10.34, 10.34, 10.34); Calibrated: 2017/9/29;
- Sensor-Surface: 1.4mm (Mechanical Surface Detection)
- Electronics: DAE4 Sn1399; Calibrated: 2017/11/16
- Phantom: SAM_Right; Type: QD000P40CD; Serial: S/N:1796
- Measurement SW: DASY52, Version 52.8 (8); SEMCAD X Version 14.6.10 (7373)

Pin=250mW/Area Scan (61x61x1): Interpolated grid: dx=1.500 mm, dy=1.500 mm
Maximum value of SAR (interpolated) = 2.99 W/kg

Pin=250mW/Zoom Scan (5x5x7)/Cube 0: Measurement grid: dx=8mm, dy=8mm, dz=5mm
Reference Value = 56.35 V/m; Power Drift = -0.14 dB
Peak SAR (extrapolated) = 3.31 W/kg
SAR(1 g) = 2.28 W/kg; SAR(10 g) = 1.53 W/kg
Maximum value of SAR (measured) = 2.84 W/kg

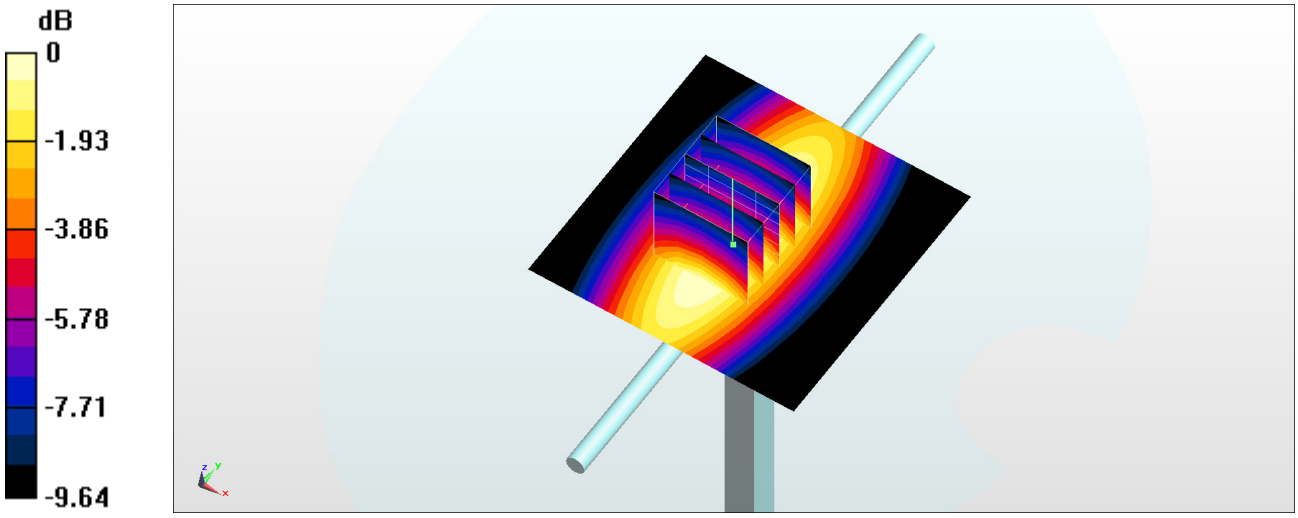

0 dB = 2.84 W/kg = 4.53 dBW/kg

System Check_Head_835MHz

DUT: D835V2-499

Communication System: CW; Frequency: 835 MHz;Duty Cycle: 1:1
Medium: HSL_850_171230 Medium parameters used: f = 835 MHz; σ = 0.91 S/m; ε_r = 42.472; ρ = 1000 kg/m^3
Ambient Temperature：23.1 ℃; Liquid Temperature：22.1 ℃

DASY5 Configuration
- Probe: EX3DV4 - SN7306; ConvF(9.79, 9.79, 9.79); Calibrated: 2017/7/24;
- Sensor-Surface: 1.4mm (Mechanical Surface Detection)
- Electronics: DAE4 Sn853; Calibrated: 2017/7/19
- Phantom: SAM_Right; Type: QD000P40CD; Serial: S/N:1796
- Measurement SW: DASY52, Version 52.8 (8); SEMCAD X Version 14.6.10 (7373)

Pin=250mW/Area Scan (61x61x1): Interpolated grid: dx=1.500 mm, dy=1.500 mm
Maximum value of SAR (interpolated) = 3.43 W/kg

Pin=250mW/Zoom Scan (5x5x7)/Cube 0: Measurement grid: dx=8mm, dy=8mm, dz=5mm
Reference Value = 63.76 V/m; Power Drift = -0.04 dB
Peak SAR (extrapolated) = 3.61 W/kg
SAR(1 g) = 2.46 W/kg; SAR(10 g) = 1.64 W/kg
Maximum value of SAR (measured) = 3.22 W/kg

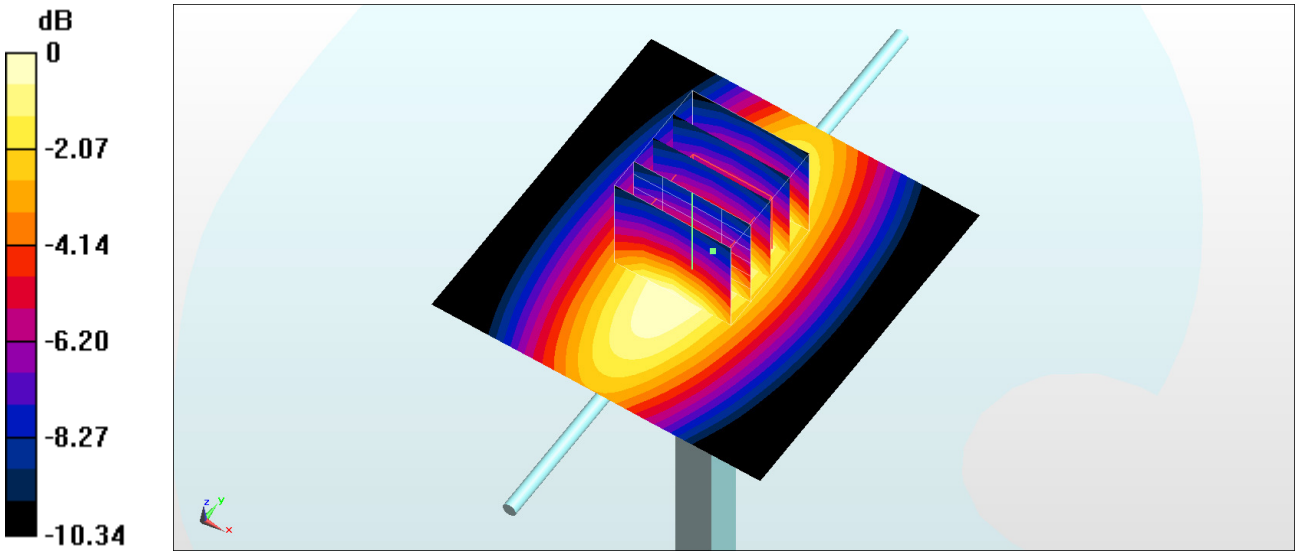

0 dB = 3.22 W/kg = 5.08 dBW/kg

System Check_Head_835MHz

DUT: D835V2-499

Communication System: CW; Frequency: 835 MHz;Duty Cycle: 1:1
Medium: HSL_850_180107 Medium parameters used: f = 835 MHz; σ = 0.873 S/m; ε_r = 43.23; ρ = 1000 kg/m^3
Ambient Temperature：23.6 ℃; Liquid Temperature：22.6 ℃

DASY5 Configuration
- Probe: EX3DV4 - SN3925; ConvF(10.41, 10.41, 10.41); Calibrated: 2017/5/24;
- Sensor-Surface: 1.4mm (Mechanical Surface Detection)
- Electronics: DAE4 Sn853; Calibrated: 2017/7/19
- Phantom: SAM_Left; Type: QD000P40CD; Serial: S/N:1801
- Measurement SW: DASY52, Version 52.8 (8); SEMCAD X Version 14.6.10 (7373)

Pin=250mW/Area Scan (61x61x1): Interpolated grid: dx=1.500 mm, dy=1.500 mm
Maximum value of SAR (interpolated) = 3.01 W/kg

Pin=250mW/Zoom Scan (5x5x7)/Cube 0: Measurement grid: dx=8mm, dy=8mm, dz=5mm
Reference Value = 61.18 V/m; Power Drift = 0.03 dB
Peak SAR (extrapolated) = 3.46 W/kg
SAR(1 g) = 2.27 W/kg; SAR(10 g) = 1.49 W/kg
Maximum value of SAR (measured) = 3.06 W/kg

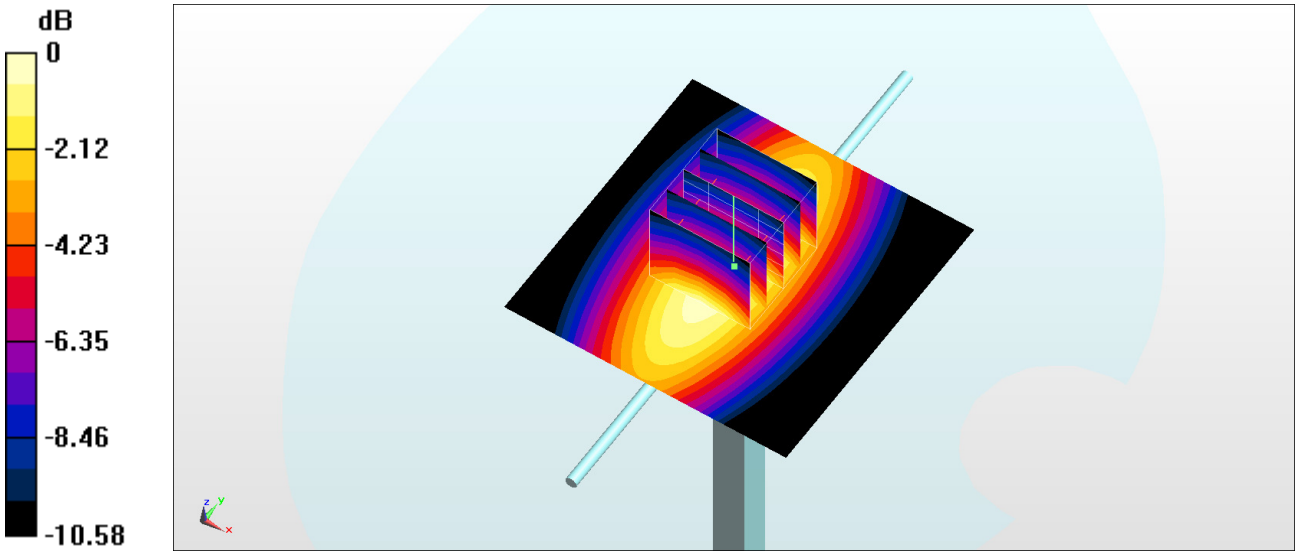

0 dB = 3.06 W/kg = 4.86 dBW/kg

System Check_Body_835MHz

DUT: D835V2-499

Communication System: CW; Frequency: 835 MHz;Duty Cycle: 1:1
Medium: MSL_850_180110 Medium parameters used: f = 835 MHz; σ = 0.937 S/m; ε_r = 56.065; ρ = 1000 kg/m^3
Ambient Temperature：23.5 ℃; Liquid Temperature：22.5 ℃

DASY5 Configuration
- Probe: EX3DV4 - SN3931; ConvF(10.09, 10.09, 10.09); Calibrated: 2017/9/29;
- Sensor-Surface: 1.4mm (Mechanical Surface Detection)
- Electronics: DAE4 Sn1399; Calibrated: 2017/11/16
- Phantom: SAM_Right; Type: QD000P40CD; Serial: S/N:1796
- Measurement SW: DASY52, Version 52.8 (8); SEMCAD X Version 14.6.10 (7373)

Pin=250mW/Area Scan (61x61x1): Interpolated grid: dx=1.500 mm, dy=1.500 mm
Maximum value of SAR (interpolated) = 3.09 W/kg

Pin=250mW/Zoom Scan (5x5x7)/Cube 0: Measurement grid: dx=8mm, dy=8mm, dz=5mm
Reference Value = 58.30 V/m; Power Drift = -0.02 dB
Peak SAR (extrapolated) = 3.63 W/kg
SAR(1 g) = 2.48 W/kg; SAR(10 g) = 1.65 W/kg
Maximum value of SAR (measured) = 3.11 W/kg

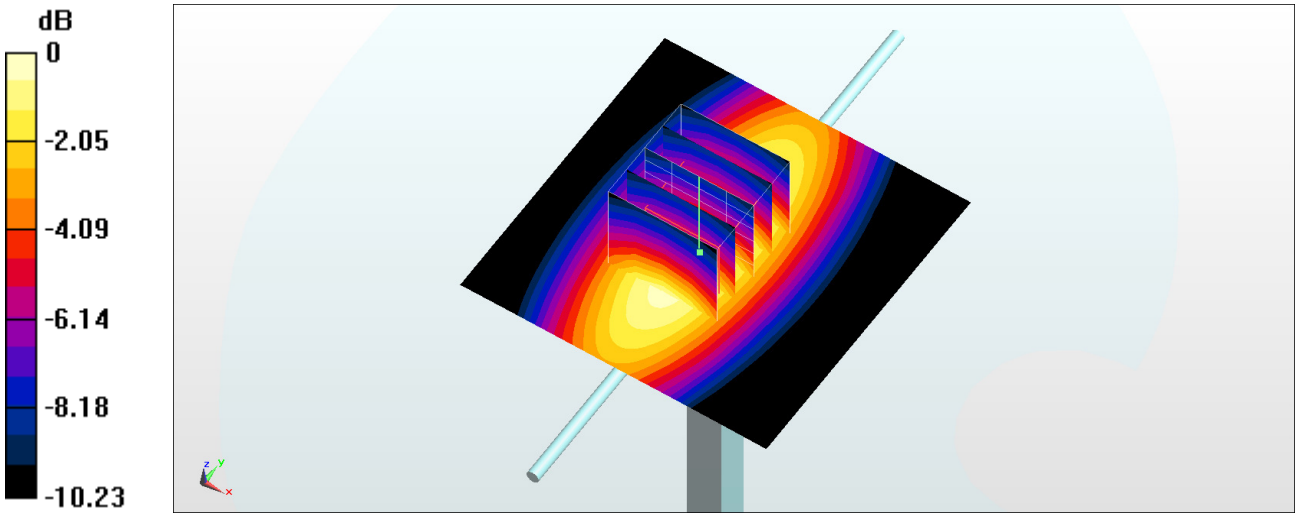

0 dB = 3.11 W/kg = 4.93 dBW/kg

System Check_Body_835MHz

DUT: D835V2-499

Communication System: CW; Frequency: 835 MHz;Duty Cycle: 1:1
Medium: MSL_850_180123 Medium parameters used: f = 835 MHz; σ = 0.964 S/m; ε_r = 56.895; ρ = 1000 kg/m^3
Ambient Temperature：23.2 ℃; Liquid Temperature：22.2 ℃

DASY5 Configuration
- Probe: ES3DV3 - SN3270; ConvF(6.09, 6.09, 6.09); Calibrated: 2017/9/25;
- Sensor-Surface: 3mm (Mechanical Surface Detection)
- Electronics: DAE4 Sn854; Calibrated: 2017/5/2
- Phantom: SAM_RIGHT; Type: QD000P40CD; Serial: 1719
- Measurement SW: DASY52, Version 52.8 (8); SEMCAD X Version 14.6.10 (7373)

Pin=250mW/Area Scan (61x61x1): Interpolated grid: dx=1.500 mm, dy=1.500 mm
Maximum value of SAR (interpolated) = 2.72 W/kg

Pin=250mW/Zoom Scan (5x5x7)/Cube 0: Measurement grid: dx=8mm, dy=8mm, dz=5mm
Reference Value = 55.06 V/m; Power Drift = -0.03 dB
Peak SAR (extrapolated) = 3.35 W/kg
SAR(1 g) = 2.36 W/kg; SAR(10 g) = 1.6 W/kg
Maximum value of SAR (measured) = 2.72 W/kg

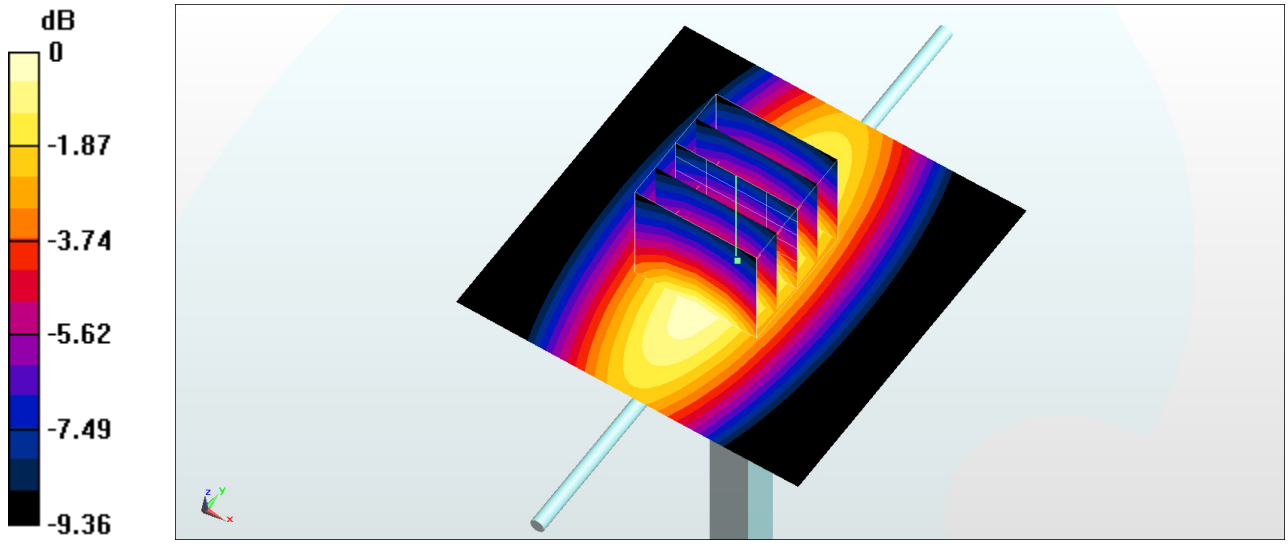

0 dB = 2.72 W/kg = 4.35 dBW/kg

System Check_Head_1750MHz

DUT: D1750V2-1068

Communication System: CW ; Frequency: 1750 MHz;Duty Cycle: 1:1
Medium: HSL_1750_180106 Medium parameters used: f = 1750 MHz; σ = 1.362 S/m; ε_r = 38.748; ρ = 1000 kg/m^3
Ambient Temperature：23.4 ℃; Liquid Temperature：22.4 ℃

DASY5 Configuration
- Probe: EX3DV4 - SN3925; ConvF(9, 9, 9); Calibrated: 2017/5/24;
- Sensor-Surface: 1.4mm (Mechanical Surface Detection)
- Electronics: DAE4 Sn853; Calibrated: 2017/7/19
- Phantom: SAM_Right; Type: QD000P40CD; Serial: S/N:1796
- Measurement SW: DASY52, Version 52.8 (8); SEMCAD X Version 14.6.10 (7373)

Pin=250mW/Area Scan (61x61x1): Interpolated grid: dx=1.500 mm, dy=1.500 mm
Maximum value of SAR (interpolated) = 13.4 W/kg

Pin=250mW/Zoom Scan (5x5x7)/Cube 0: Measurement grid: dx=8mm, dy=8mm, dz=5mm
Reference Value = 102.0 V/m; Power Drift = -0.00 dB
Peak SAR (extrapolated) = 16.0 W/kg
SAR(1 g) = 8.58 W/kg; SAR(10 g) = 4.54 W/kg
Maximum value of SAR (measured) = 13.3 W/kg

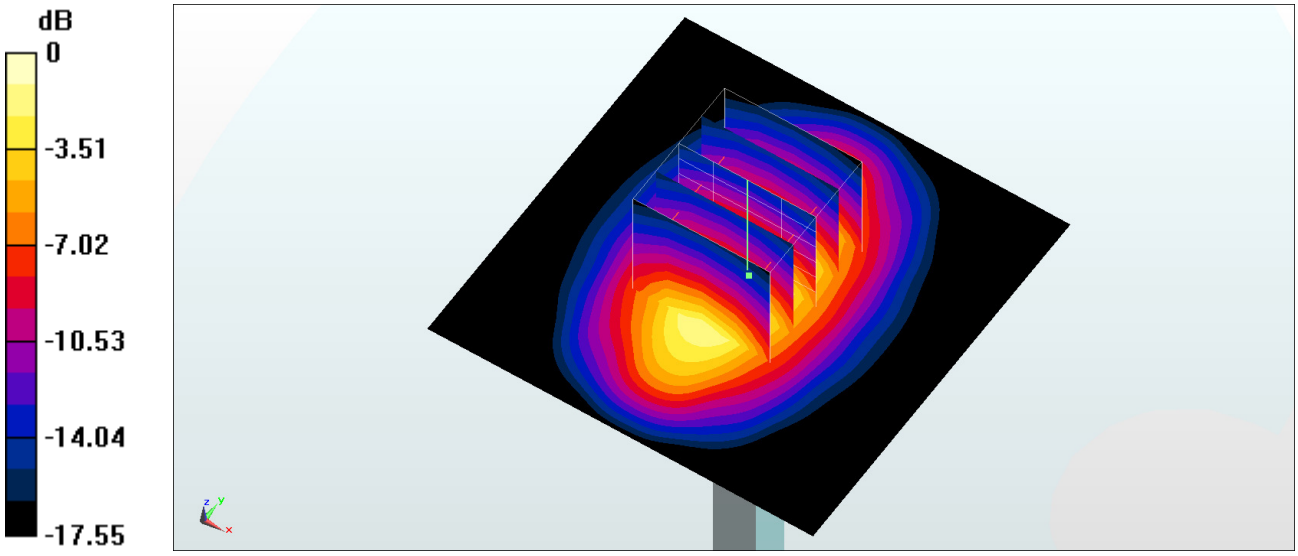

0 dB = 13.3 W/kg = 11.24 dBW/kg

System Check_Body_1750MHz

DUT: D1750V2-1068

Communication System: CW ; Frequency: 1750 MHz;Duty Cycle: 1:1
Medium: MSL_1750_180123 Medium parameters used: f = 1750 MHz; σ = 1.466 S/m; ε_r = 55.25; ρ = 1000 kg/m^3
Ambient Temperature：23.3 ℃; Liquid Temperature：22.3 ℃

DASY5 Configuration
- Probe: ES3DV3 - SN3270; ConvF(5, 5, 5); Calibrated: 2017/9/25;
- Sensor-Surface: 3mm (Mechanical Surface Detection)
- Electronics: DAE4 Sn854; Calibrated: 2017/5/2
- Phantom: SAM_RIGHT; Type: QD000P40CD; Serial: 1719
- Measurement SW: DASY52, Version 52.8 (8); SEMCAD X Version 14.6.10 (7373)

Pin=250mW/Area Scan (61x61x1): Interpolated grid: dx=1.500 mm, dy=1.500 mm
Maximum value of SAR (interpolated) = 10.9 W/kg

Pin=250mW/Zoom Scan (5x5x7)/Cube 0: Measurement grid: dx=8mm, dy=8mm, dz=5mm
Reference Value = 89.05 V/m; Power Drift = -0.00 dB
Peak SAR (extrapolated) = 14.8 W/kg
SAR(1 g) = 8.8 W/kg; SAR(10 g) = 4.87 W/kg
Maximum value of SAR (measured) = 10.8 W/kg

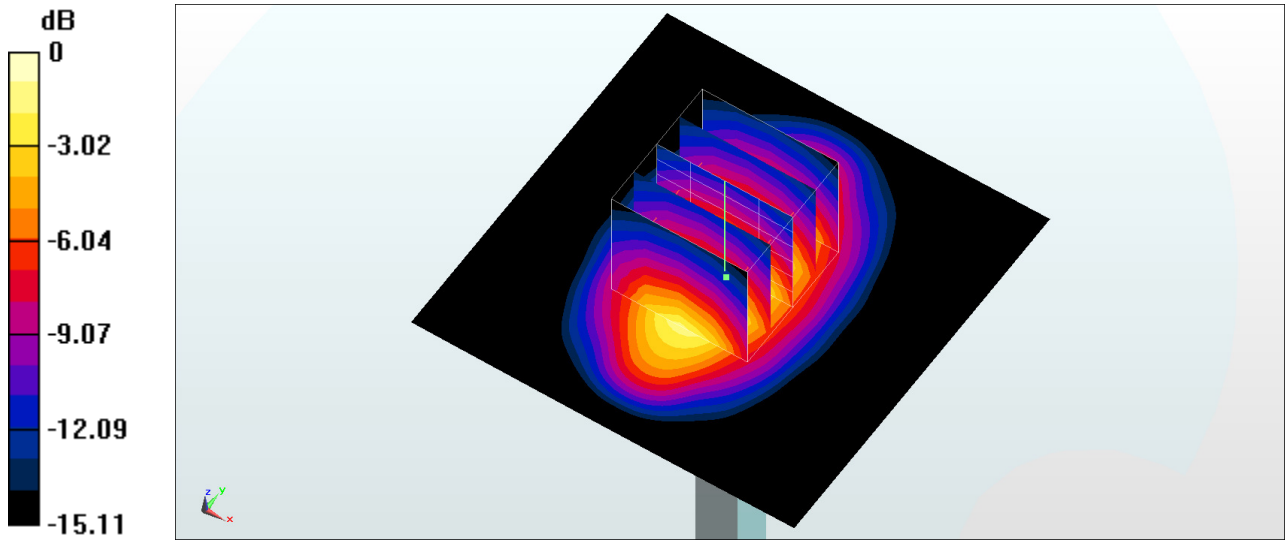

0 dB = 10.8 W/kg = 10.33 dBW/kg

System Check_Body_1750MHz

DUT: D1750V2-1068

Communication System: CW; Frequency: 1750 MHz;Duty Cycle: 1:1
Medium: MSL_1750_180128 Medium parameters used: f = 1750 MHz; σ = 1.463 S/m; ε_r = 55.13; ρ = 1000 kg/m^3
Ambient Temperature：23.4 ℃; Liquid Temperature：22.4 ℃

DASY5 Configuration
- Probe: EX3DV4 - SN3931; ConvF(8.43, 8.43, 8.43); Calibrated: 2017/9/29;
- Sensor-Surface: 1.4mm (Mechanical Surface Detection)
- Electronics: DAE4 Sn1399; Calibrated: 2017/11/16
- Phantom: SAM_Left; Type: QD000P40CD; Serial: S/N:1801
- Measurement SW: DASY52, Version 52.8 (8); SEMCAD X Version 14.6.10 (7373)

Pin=250mW/Area Scan (61x61x1): Interpolated grid: dx=1.500 mm, dy=1.500 mm
Maximum value of SAR (interpolated) = 13.7 W/kg

Pin=250mW/Zoom Scan (5x5x7)/Cube 0: Measurement grid: dx=8mm, dy=8mm, dz=5mm
Reference Value = 95.83 V/m; Power Drift = -0.03 dB
Peak SAR (extrapolated) = 14.3 W/kg
SAR(1 g) = 8.61 W/kg; SAR(10 g) = 4.6 W/kg
Maximum value of SAR (measured) = 12.1 W/kg

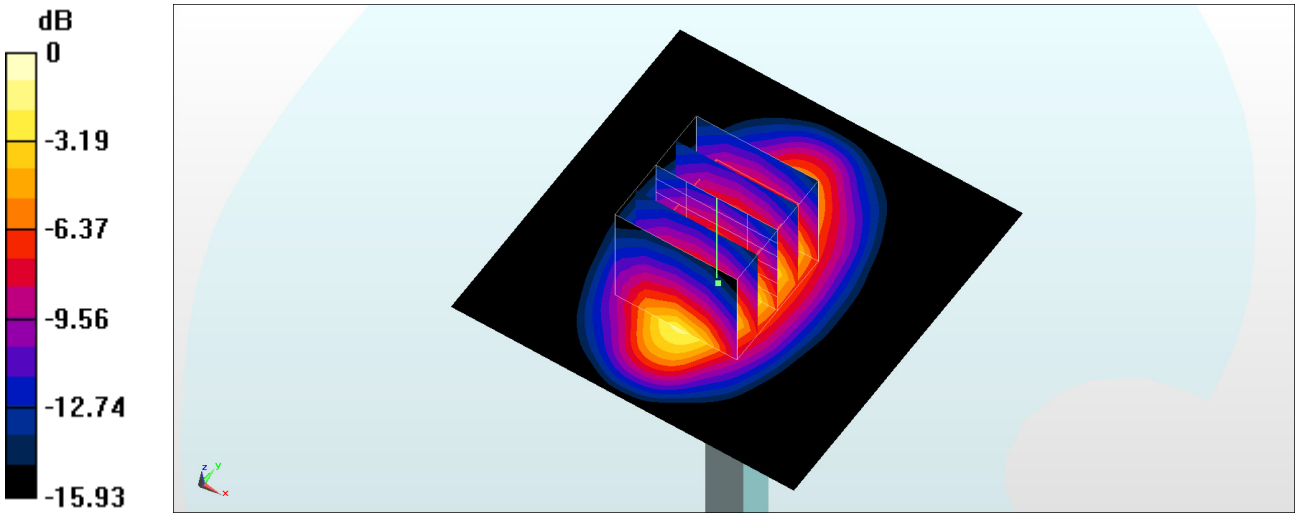

0 dB = 12.1 W/kg = 10.83 dBW/kg

System Check_Head_1900MHz

DUT: D1900V2-5d041

Communication System: CW; Frequency: 1900 MHz;Duty Cycle: 1:1
Medium: HSL_1900_180107 Medium parameters used: f = 1900 MHz; σ = 1.439 S/m; ε_r = 39.417; ρ = 1000 kg/m^3
Ambient Temperature：23.1 ℃; Liquid Temperature：22.1 ℃

DASY5 Configuration
- Probe: EX3DV4 - SN3925; ConvF(8.73, 8.73, 8.73); Calibrated: 2017/5/24;
- Sensor-Surface: 1.4mm (Mechanical Surface Detection)
- Electronics: DAE4 Sn853; Calibrated: 2017/7/19
- Phantom: SAM_Right; Type: QD000P40CD; Serial: S/N:1796
- Measurement SW: DASY52, Version 52.8 (8); SEMCAD X Version 14.6.10 (7373)

Pin=250mW/Area Scan (61x61x1): Interpolated grid: dx=1.500 mm, dy=1.500 mm
Maximum value of SAR (interpolated) = 14.8 W/kg

Pin=250mW/Zoom Scan (5x5x7)/Cube 0: Measurement grid: dx=8mm, dy=8mm, dz=5mm
Reference Value = 96.08 V/m; Power Drift = 0.10 dB
Peak SAR (extrapolated) = 17.9 W/kg
SAR(1 g) = 9.78 W/kg; SAR(10 g) = 5.12 W/kg
Maximum value of SAR (measured) = 14.8 W/kg

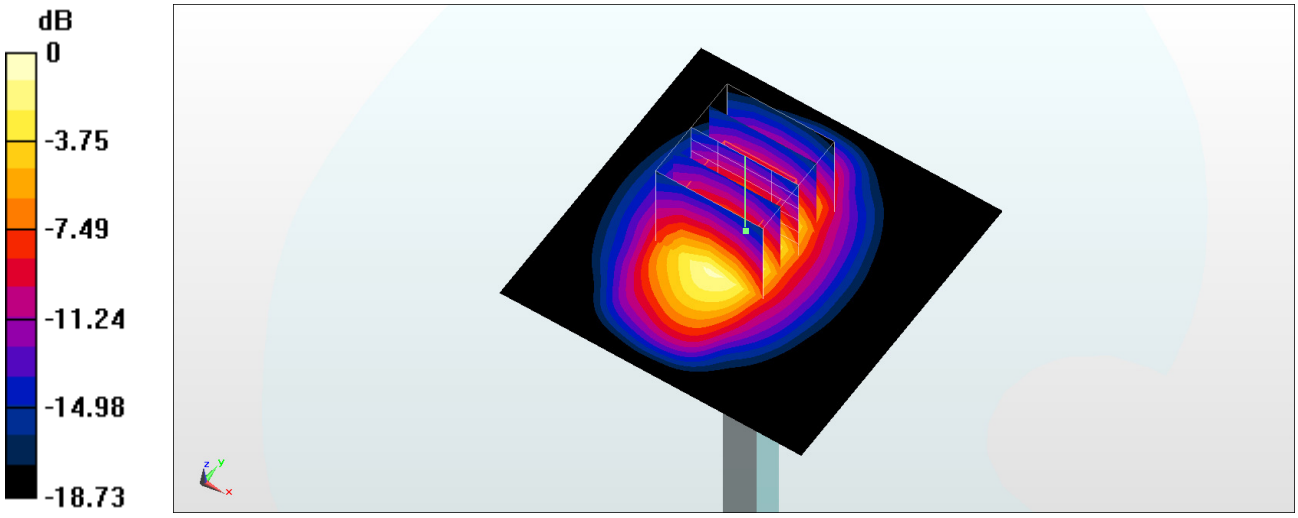

0 dB = 14.8 W/kg = 11.70 dBW/kg

System Check_Body_1900MHz

DUT: D1900V2-5d041

Communication System: CW; Frequency: 1900 MHz;Duty Cycle: 1:1
Medium: MSL_1900_180122 Medium parameters used: f = 1900 MHz; σ = 1.554 S/m; ε_r = 51.75; ρ = 1000 kg/m^3
Ambient Temperature：23.4 ℃; Liquid Temperature：22.4 ℃

DASY5 Configuration
- Probe: ES3DV3 - SN3270; ConvF(4.9, 4.9, 4.9); Calibrated: 2017/9/25;
- Sensor-Surface: 3mm (Mechanical Surface Detection)
- Electronics: DAE4 Sn854; Calibrated: 2017/5/2
- Phantom: SAM_RIGHT; Type: QD000P40CD; Serial: 1719
- Measurement SW: DASY52, Version 52.8 (8); SEMCAD X Version 14.6.10 (7373)

Pin=250mW/Area Scan (61x61x1): Interpolated grid: dx=1.500 mm, dy=1.500 mm
Maximum value of SAR (interpolated) = 12.7 W/kg

Pin=250mW/Zoom Scan (5x5x7)/Cube 0: Measurement grid: dx=8mm, dy=8mm, dz=5mm
Reference Value = 90.85 V/m; Power Drift = 0.01 dB
Peak SAR (extrapolated) = 17.4 W/kg
SAR(1 g) = 9.68 W/kg; SAR(10 g) = 5.11 W/kg
Maximum value of SAR (measured) = 12.1 W/kg

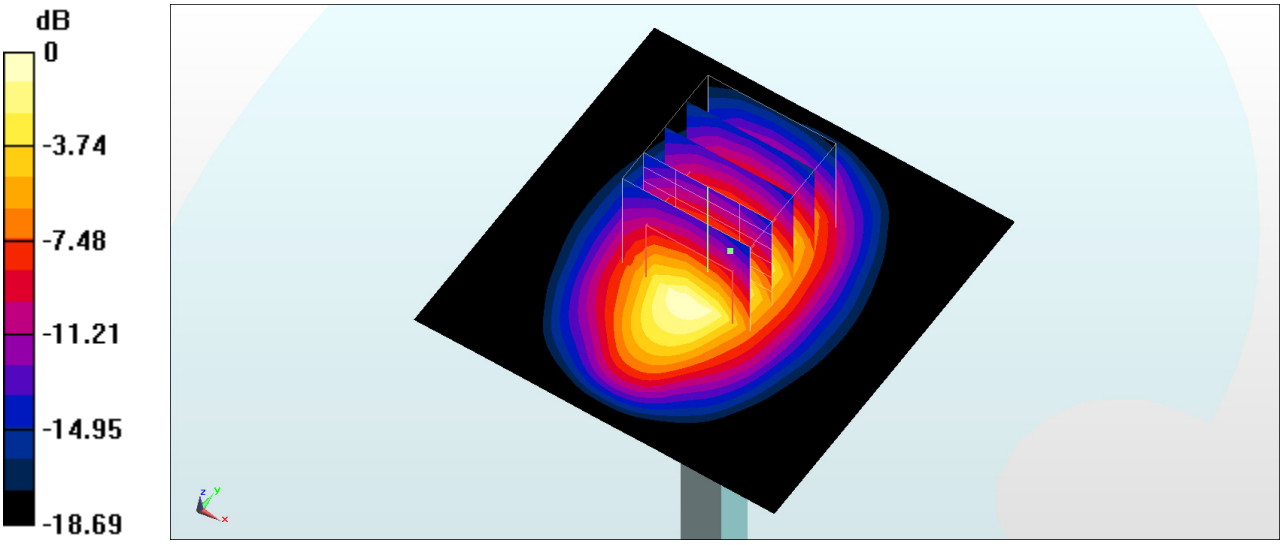

0 dB = 12.1 W/kg = 10.83 dBW/kg

System Check_Body_1900MHz

DUT: D1900V2-5d041

Communication System: CW; Frequency: 1900 MHz;Duty Cycle: 1:1
Medium: MSL_1900_180125 Medium parameters used: f = 1900 MHz; σ = 1.552 S/m; ε_r = 51.708; ρ = 1000 kg/m^3
Ambient Temperature：23.6 ℃; Liquid Temperature：22.6 ℃

DASY5 Configuration
- Probe: EX3DV4 - SN3931; ConvF(8.12, 8.12, 8.12); Calibrated: 2017/9/29;
- Sensor-Surface: 1.4mm (Mechanical Surface Detection)
- Electronics: DAE4 Sn1399; Calibrated: 2017/11/16
- Phantom: SAM_Left; Type: QD000P40CD; Serial: S/N:1801
- Measurement SW: DASY52, Version 52.8 (8); SEMCAD X Version 14.6.10 (7373)

Pin=250mW/Area Scan (61x61x1): Interpolated grid: dx=1.500 mm, dy=1.500 mm
Maximum value of SAR (interpolated) = 15.8 W/kg

Pin=250mW/Zoom Scan (5x5x7)/Cube 0: Measurement grid: dx=8mm, dy=8mm, dz=5mm
Reference Value = 102.4 V/m; Power Drift = -0.06 dB
Peak SAR (extrapolated) = 18.4 W/kg
SAR(1 g) = 10.5 W/kg; SAR(10 g) = 5.51 W/kg
Maximum value of SAR (measured) = 15.8 W/kg

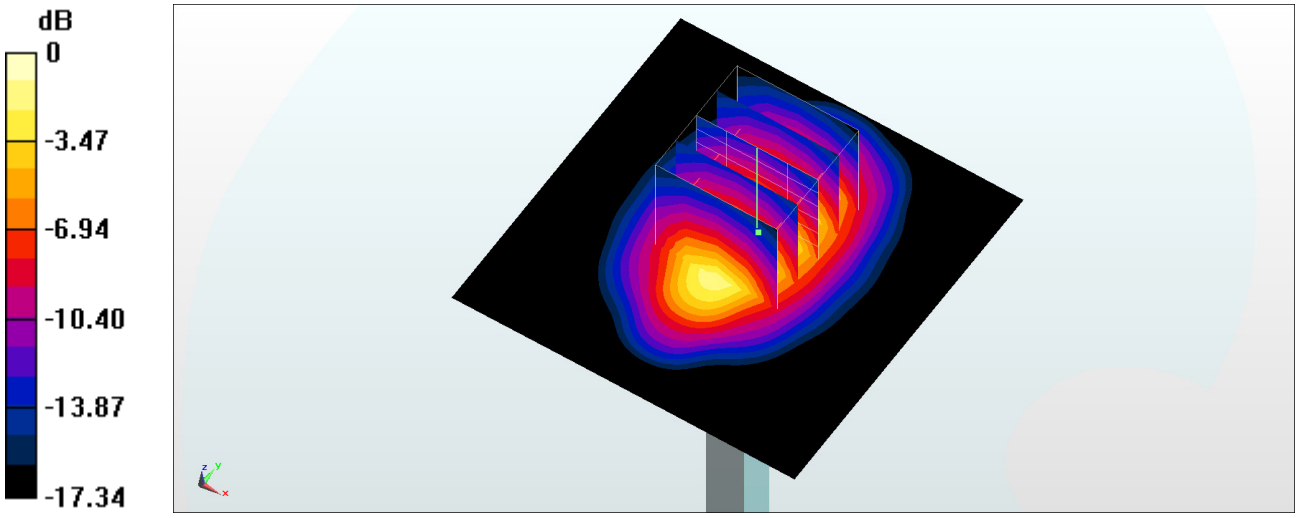

0 dB = 15.8 W/kg = 11.99 dBW/kg

System Check_Body_1900MHz

DUT: D1900V2-5d041

Communication System: CW; Frequency: 1900 MHz;Duty Cycle: 1:1
Medium: MSL_1900_180128 Medium parameters used: f = 1900 MHz; σ = 1.55 S/m; ε_r = 51.6; ρ = 1000 kg/m^3
Ambient Temperature：23.4 ℃; Liquid Temperature：22.4 ℃

DASY5 Configuration
- Probe: EX3DV4 - SN3931; ConvF(8.12, 8.12, 8.12); Calibrated: 2017/9/29;
- Sensor-Surface: 1.4mm (Mechanical Surface Detection)
- Electronics: DAE4 Sn1399; Calibrated: 2017/11/16
- Phantom: SAM_Left; Type: QD000P40CD; Serial: S/N:1801
- Measurement SW: DASY52, Version 52.8 (8); SEMCAD X Version 14.6.10 (7373)

Pin=250mW/Area Scan (61x61x1): Interpolated grid: dx=1.500 mm, dy=1.500 mm
Maximum value of SAR (interpolated) = 15.8 W/kg

Pin=250mW/Zoom Scan (5x5x7)/Cube 0: Measurement grid: dx=8mm, dy=8mm, dz=5mm
Reference Value = 102.4 V/m; Power Drift = -0.06 dB
Peak SAR (extrapolated) = 18.3 W/kg
SAR(1 g) = 10.5 W/kg; SAR(10 g) = 5.5 W/kg
Maximum value of SAR (measured) = 15.7 W/kg

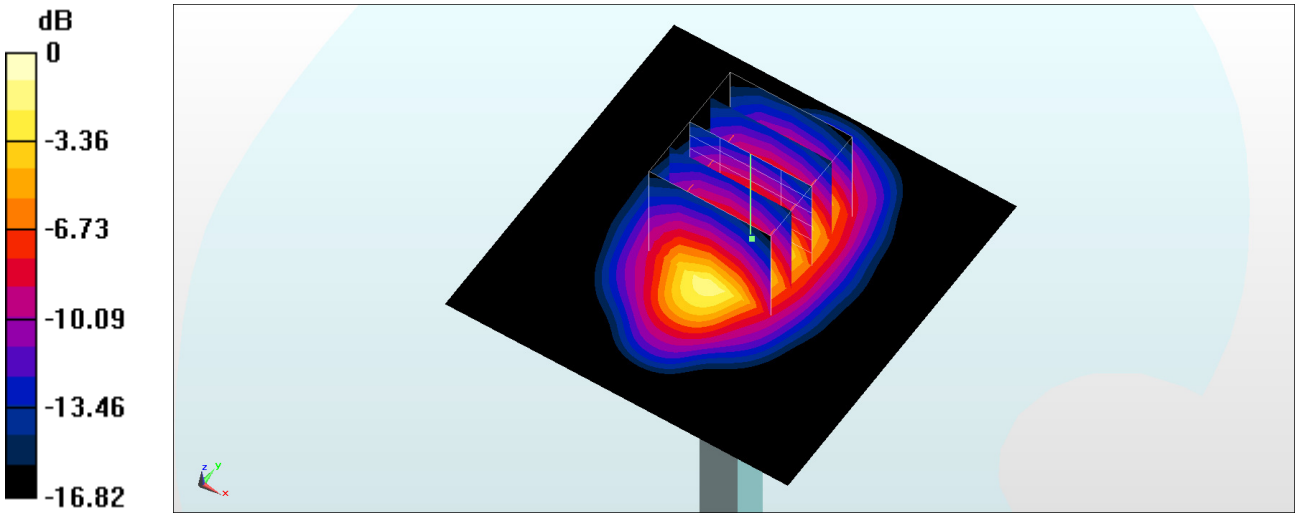

0 dB = 15.7 W/kg = 11.96 dBW/kg

System Check_Head_2450MHz

DUT: D2450V2-736

Communication System: CW; Frequency: 2450 MHz;Duty Cycle: 1:1
Medium: HSL_2450_180111 Medium parameters used: f = 2450 MHz; σ = 1.776 S/m; ε_r = 38.792; ρ = 1000 kg/m^3
Ambient Temperature：23.2 ℃; Liquid Temperature：22.2 ℃

DASY5 Configuration
- Probe: ES3DV3 - SN3169; ConvF(4.5, 4.5, 4.5); Calibrated: 2017/5/11;
- Sensor-Surface: 3mm (Mechanical Surface Detection)
- Electronics: DAE3 Sn495; Calibrated: 2017/5/22
- Phantom: SAM_Right; Type: QD000P40CD; Serial: S/N:1796
- Measurement SW: DASY52, Version 52.8 (8); SEMCAD X Version 14.6.10 (7373)

Pin=250mW/Area Scan (61x61x1): Interpolated grid: dx=1.200 mm, dy=1.200 mm
Maximum value of SAR (interpolated) = 18.7 W/kg

Pin=250mW/Zoom Scan (7x7x7)/Cube 0: Measurement grid: dx=5mm, dy=5mm, dz=5mm
Reference Value = 104.7 V/m; Power Drift = -0.03 dB
Peak SAR (extrapolated) = 28.9 W/kg
SAR(1 g) = 13.5 W/kg; SAR(10 g) = 6.2 W/kg
Maximum value of SAR (measured) = 17.6 W/kg

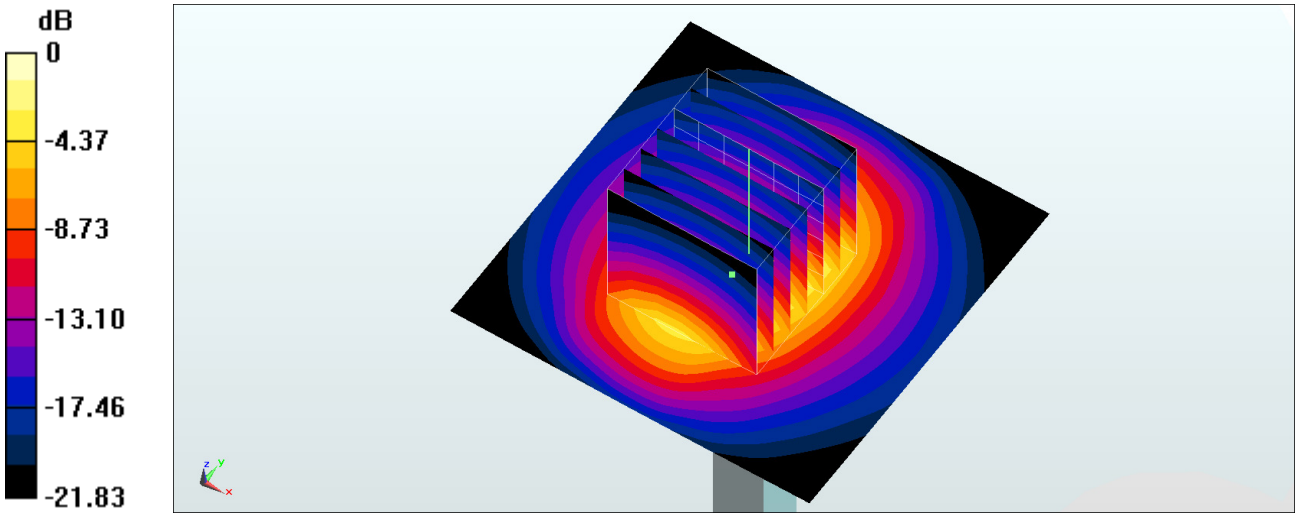

0 dB = 17.6 W/kg = 12.46 dBW/kg

System Check_Head_2450MHz

DUT: D2450V2-736

Communication System: CW; Frequency: 2450 MHz;Duty Cycle: 1:1
Medium: HSL_2450_180119 Medium parameters used: f = 2450 MHz; σ = 1.762 S/m; ε_r = 39.606; ρ = 1000 kg/m^3
Ambient Temperature：23.6 ℃; Liquid Temperature：22.6 ℃

DASY5 Configuration
- Probe: EX3DV4 - SN7306; ConvF(7.49, 7.49, 7.49); Calibrated: 2017/7/24;
- Sensor-Surface: 1.4mm (Mechanical Surface Detection)
- Electronics: DAE4 Sn778; Calibrated: 2017/5/22
- Phantom: SAM_RIGHT; Type: QD000P40CD; Serial: 1719
- Measurement SW: DASY52, Version 52.8 (8); SEMCAD X Version 14.6.10 (7373)

Pin=250mW/Area Scan (71x71x1): Interpolated grid: dx=1.200 mm, dy=1.200 mm
Maximum value of SAR (interpolated) = 19.1 W/kg

Pin=250mW/Zoom Scan (7x7x7)/Cube 0: Measurement grid: dx=5mm, dy=5mm, dz=5mm
Reference Value = 110.7 V/m; Power Drift = 0.04 dB
Peak SAR (extrapolated) = 25.5 W/kg
SAR(1 g) = 12.4 W/kg; SAR(10 g) = 5.82 W/kg
Maximum value of SAR (measured) = 20.7 W/kg

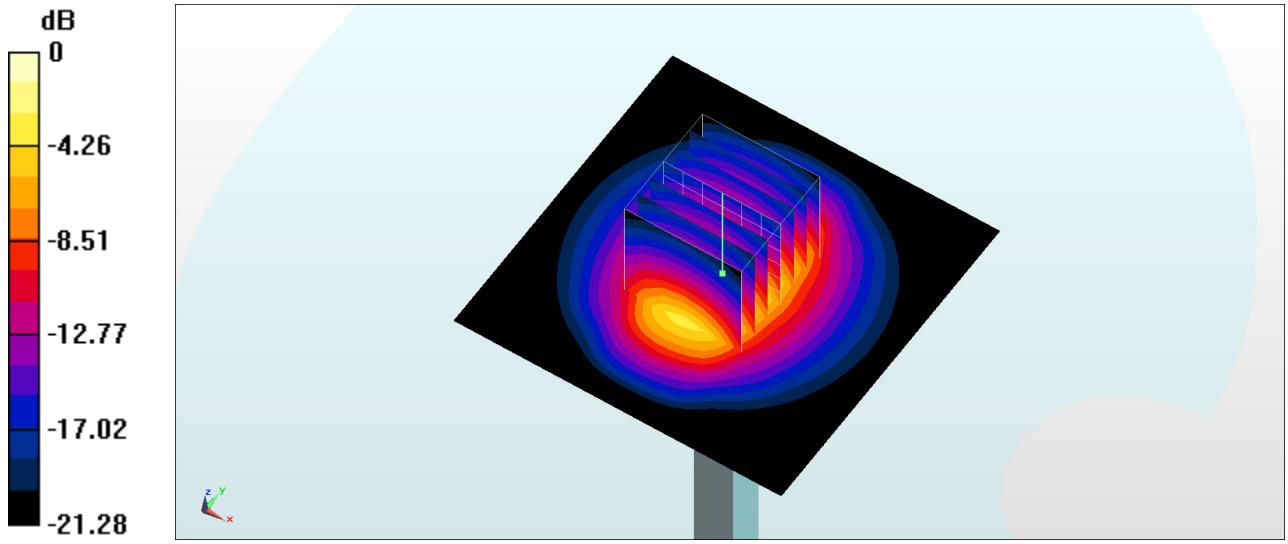

0 dB = 20.7 W/kg = 13.16 dBW/kg

System Check_Body_2450MHz

DUT: D2450V2-736

Communication System: CW; Frequency: 2450 MHz;Duty Cycle: 1:1
Medium: MSL_2450_180111 Medium parameters used: f = 2450 MHz; σ = 1.996 S/m; ε_r = 54.487; ρ = 1000 kg/m^3
Ambient Temperature：23.2 ℃; Liquid Temperature：22.2 ℃

DASY5 Configuration
- Probe: ES3DV3 - SN3169; ConvF(4.28, 4.28, 4.28); Calibrated: 2017/5/11;
- Sensor-Surface: 3mm (Mechanical Surface Detection)
- Electronics: DAE3 Sn495; Calibrated: 2017/5/22
- Phantom: SAM_Left; Type: QD000P40CD; Serial: S/N:1801
- Measurement SW: DASY52, Version 52.8 (8); SEMCAD X Version 14.6.10 (7373)

Pin=250mW/Area Scan (61x61x1): Interpolated grid: dx=1.200 mm, dy=1.200 mm
Maximum value of SAR (interpolated) = 16.5 W/kg

Pin=250mW/Zoom Scan (7x7x7)/Cube 0: Measurement grid: dx=5mm, dy=5mm, dz=5mm
Reference Value = 94.38 V/m; Power Drift = -0.05 dB
Peak SAR (extrapolated) = 24.3 W/kg
SAR(1 g) = 12.5 W/kg; SAR(10 g) = 5.9 W/kg
Maximum value of SAR (measured) = 16.5 W/kg

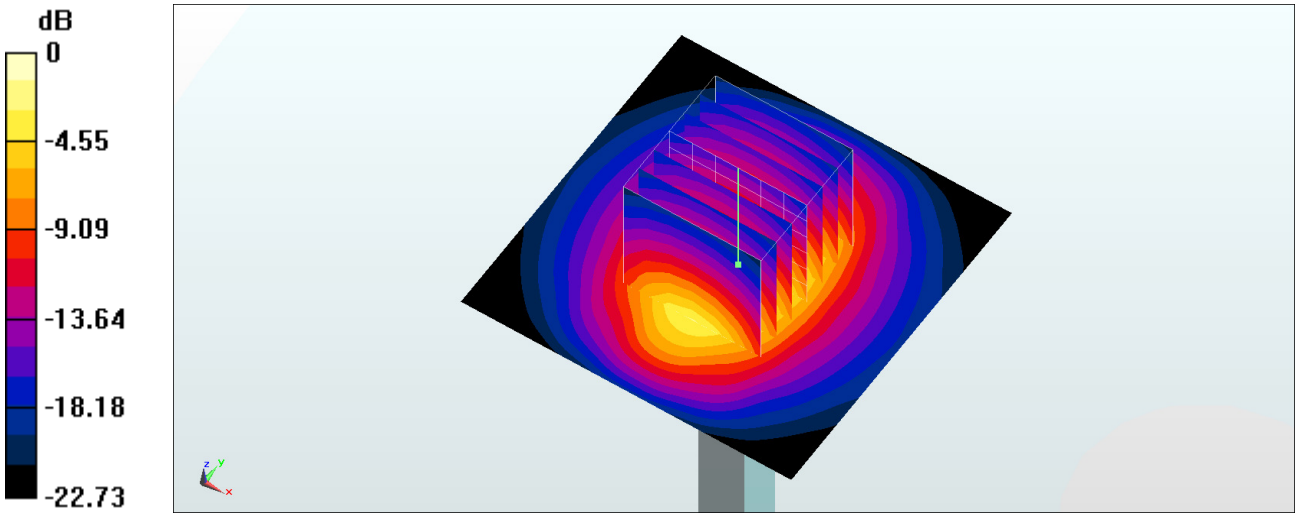

0 dB = 16.5 W/kg = 12.17 dBW/kg

System Check_Body_2450MHz

DUT: D2450V2-736

Communication System: CW; Frequency: 2450 MHz;Duty Cycle: 1:1
Medium: MSL_2450_180118 Medium parameters used: f = 2450 MHz; σ = 2.019 S/m; ε_r = 53.573; ρ = 1000 kg/m^3
Ambient Temperature：23.6 ℃; Liquid Temperature：22.6 ℃

DASY5 Configuration
- Probe: EX3DV4 - SN7306; ConvF(7.73, 7.73, 7.73); Calibrated: 2017/7/24;
- Sensor-Surface: 1.4mm (Mechanical Surface Detection)
- Electronics: DAE4 Sn778; Calibrated: 2017/5/22
- Phantom: SAM_RIGHT; Type: QD000P40CD; Serial: 1719
- Measurement SW: DASY52, Version 52.8 (8); SEMCAD X Version 14.6.10 (7373)

Pin=250mW/Area Scan (61x61x1): Interpolated grid: dx=1.200 mm, dy=1.200 mm
Maximum value of SAR (interpolated) = 21.4 W/kg

Pin=250mW/Zoom Scan (7x7x7)/Cube 0: Measurement grid: dx=5mm, dy=5mm, dz=5mm
Reference Value = 107.1 V/m; Power Drift = -0.08 dB
Peak SAR (extrapolated) = 25.6 W/kg
SAR(1 g) = 12.6 W/kg; SAR(10 g) = 6.03 W/kg
Maximum value of SAR (measured) = 20.8 W/kg

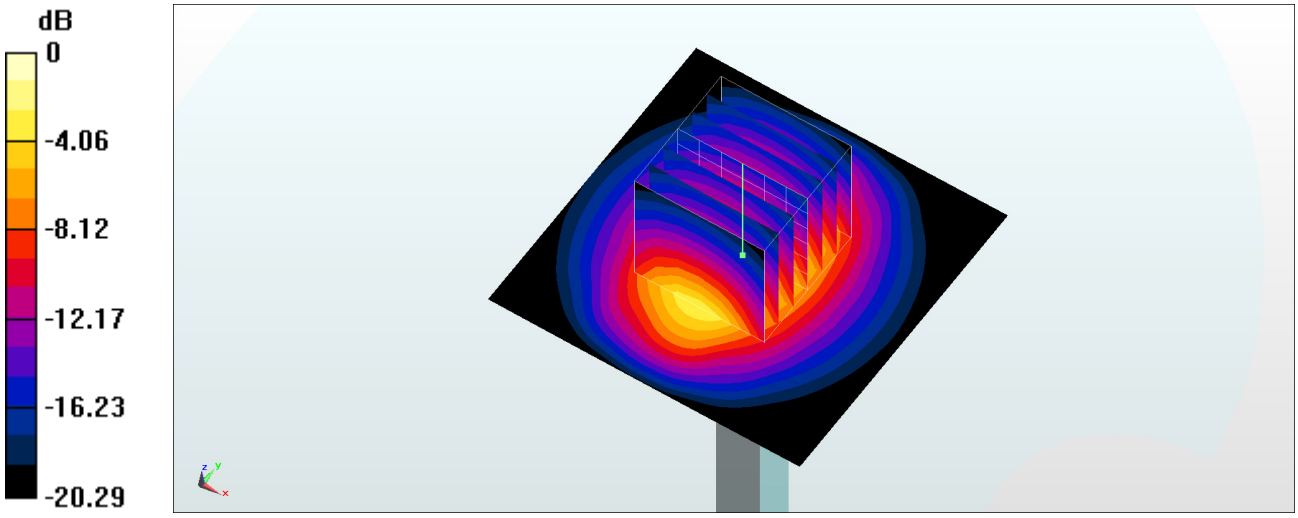

0 dB = 20.8 W/kg = 13.18 dBW/kg

System Check_Head_2600MHz

DUT: D2600V2-1008

Communication System: CW; Frequency: 2600 MHz;Duty Cycle: 1:1
Medium: HSL_2600_180108 Medium parameters used: f = 2600 MHz; σ = 1.95 S/m; ε_r = 38.37; ρ = 1000 kg/m^3
Ambient Temperature：23.2 ℃; Liquid Temperature：22.2 ℃

DASY5 Configuration
- Probe: EX3DV4 - SN3925; ConvF(7.61, 7.61, 7.61); Calibrated: 2017/5/24;
- Sensor-Surface: 1.4mm (Mechanical Surface Detection)
- Electronics: DAE4 Sn853; Calibrated: 2017/7/19
- Phantom: SAM_Left; Type: QD000P40CD; Serial: S/N:1801
- Measurement SW: DASY52, Version 52.8 (8); SEMCAD X Version 14.6.10 (7373)

Pin=250mW/Area Scan (61x61x1): Interpolated grid: dx=1.200 mm, dy=1.200 mm
Maximum value of SAR (interpolated) = 24.4 W/kg

Pin=250mW/Zoom Scan (7x7x7)/Cube 0: Measurement grid: dx=5mm, dy=5mm, dz=5mm
Reference Value = 114.3 V/m; Power Drift = 0.07 dB
Peak SAR (extrapolated) = 30.6 W/kg
SAR(1 g) = 13.9 W/kg; SAR(10 g) = 6.23 W/kg
Maximum value of SAR (measured) = 24.1 W/kg

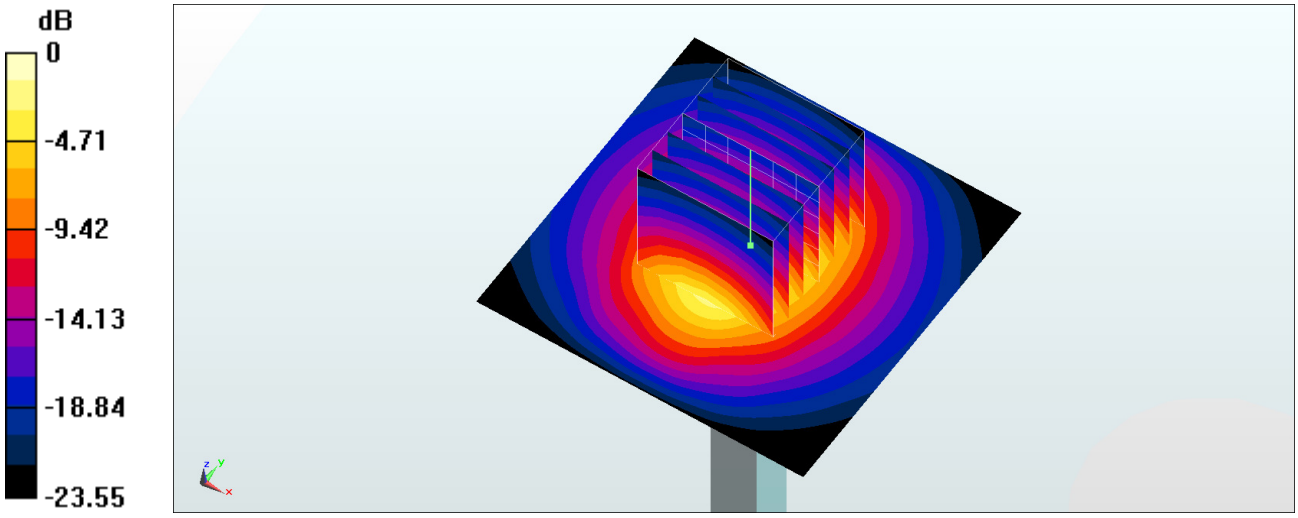

0 dB = 24.1 W/kg = 13.82 dBW/kg

System Check_Head_2600MHz

DUT: D2600V2-1008

Communication System: CW ; Frequency: 2600 MHz;Duty Cycle: 1:1
Medium: HSL_2600_180108 Medium parameters used: f = 2600 MHz; σ = 1.95 S/m; ε_r = 38.37; ρ = 1000 kg/m^3
Ambient Temperature：23.2 ℃; Liquid Temperature：22.2 ℃

DASY5 Configuration
- Probe: EX3DV4 - SN3931; ConvF(7.38, 7.38, 7.38); Calibrated: 2017/9/29;
- Sensor-Surface: 1.4mm (Mechanical Surface Detection)
- Electronics: DAE4 Sn1399; Calibrated: 2017/11/16
- Phantom: SAM_Left; Type: QD000P40CD; Serial: S/N:1801
- Measurement SW: DASY52, Version 52.8 (8); SEMCAD X Version 14.6.10 (7373)

Pin=250mW/Area Scan (61x61x1): Interpolated grid: dx=1.200 mm, dy=1.200 mm
Maximum value of SAR (interpolated) = 23.7 W/kg

Pin=250mW/Zoom Scan (7x7x7)/Cube 0: Measurement grid: dx=5mm, dy=5mm, dz=5mm
Reference Value = 114.0 V/m; Power Drift = -0.02 dB
Peak SAR (extrapolated) = 30.0 W/kg
SAR(1 g) = 13.7 W/kg; SAR(10 g) = 6.1 W/kg
Maximum value of SAR (measured) = 23.7 W/kg

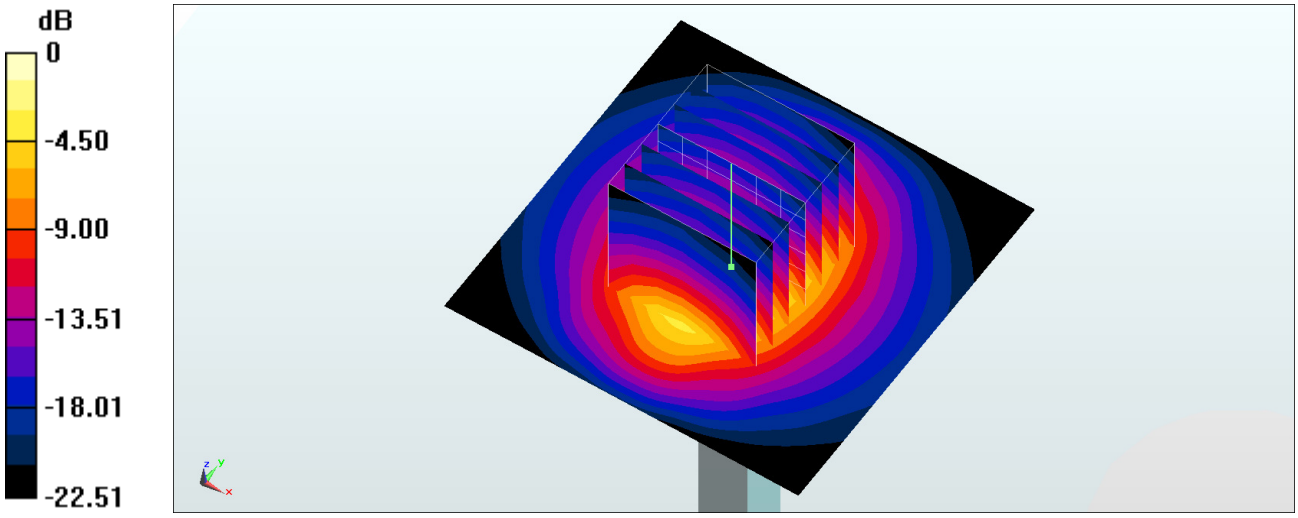

0 dB = 23.7 W/kg = 13.75 dBW/kg

System Check_Head_2600MHz

DUT: D2600V2-1008

Communication System: CW ; Frequency: 2600 MHz;Duty Cycle: 1:1
Medium: HSL_2600_180126 Medium parameters used: f = 2600 MHz; σ = 1.966 S/m; ε_r = 38.516; ρ = 1000 kg/m^3
Ambient Temperature：23.7 ℃; Liquid Temperature：22.7 ℃

DASY5 Configuration
- Probe: EX3DV4 - SN3931; ConvF(7.38, 7.38, 7.38); Calibrated: 2017/9/29;
- Sensor-Surface: 1.4mm (Mechanical Surface Detection)
- Electronics: DAE4 Sn1399; Calibrated: 2017/11/16
- Phantom: SAM_Left; Type: QD000P40CD; Serial: S/N:1801
- Measurement SW: DASY52, Version 52.8 (8); SEMCAD X Version 14.6.10 (7373)

Pin=250mW/Area Scan (61x61x1): Interpolated grid: dx=1.200 mm, dy=1.200 mm
Maximum value of SAR (interpolated) = 23.9 W/kg

Pin=250mW/Zoom Scan (7x7x7)/Cube 0: Measurement grid: dx=5mm, dy=5mm, dz=5mm
Reference Value = 114.0 V/m; Power Drift = -0.05 dB
Peak SAR (extrapolated) = 30.3 W/kg
SAR(1 g) = 13.8 W/kg; SAR(10 g) = 6.15 W/kg
Maximum value of SAR (measured) = 23.9 W/kg

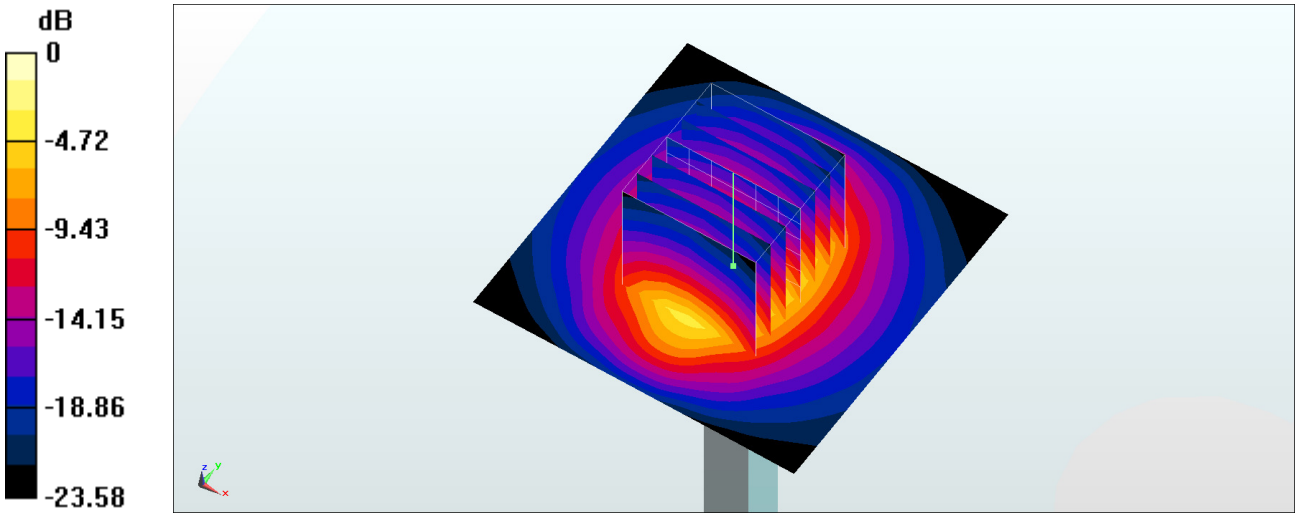

0 dB = 23.9 W/kg = 13.78 dBW/kg

System Check_Body_2600MHz

DUT: D2600V2-1008

Communication System: CW ; Frequency: 2600 MHz;Duty Cycle: 1:1
Medium: MSL_2600_180123 Medium parameters used: f = 2600 MHz; σ = 2.21 S/m; ε_r = 53.884; ρ = 1000 kg/m^3
Ambient Temperature：23.1 ℃; Liquid Temperature：22.1 ℃

DASY5 Configuration
- Probe: EX3DV4 - SN3931; ConvF(7.45, 7.45, 7.45); Calibrated: 2017/9/29;
- Sensor-Surface: 1.4mm (Mechanical Surface Detection)
- Electronics: DAE4 Sn1399; Calibrated: 2017/11/16
- Phantom: SAM_Left; Type: QD000P40CD; Serial: S/N:1801
- Measurement SW: DASY52, Version 52.8 (8); SEMCAD X Version 14.6.10 (7373)

Pin=250mW/Area Scan (61x61x1): Interpolated grid: dx=1.200 mm, dy=1.200 mm
Maximum value of SAR (interpolated) = 22.1 W/kg

Pin=250mW/Zoom Scan (7x7x7)/Cube 0: Measurement grid: dx=5mm, dy=5mm, dz=5mm
Reference Value = 100.1 V/m; Power Drift = 0.17 dB
Peak SAR (extrapolated) = 29.7 W/kg
SAR(1 g) = 14.2 W/kg; SAR(10 g) = 6.34 W/kg
Maximum value of SAR (measured) = 21.9 W/kg

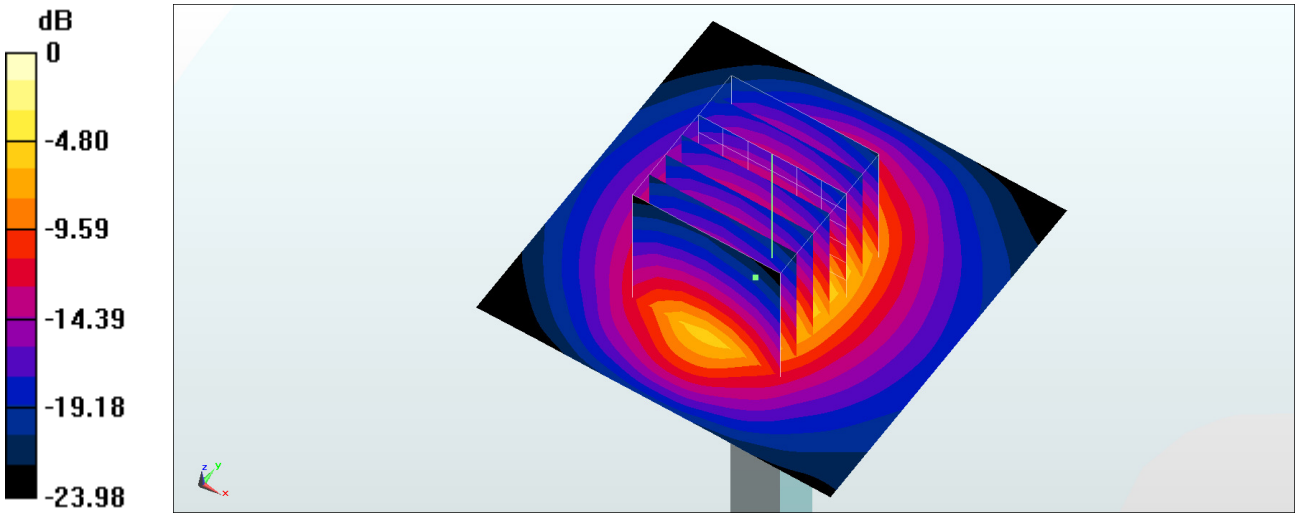

0 dB = 21.9 W/kg = 13.40 dBW/kg

System Check_Body_2600MHz

DUT: D2600V2-1008

Communication System: CW ; Frequency: 2600 MHz;Duty Cycle: 1:1
Medium: MSL_2600_180130 Medium parameters used: f = 2600 MHz; σ = 2.225 S/m; ε_r = 52.759; ρ = 1000 kg/m^3
Ambient Temperature：23.4 ℃; Liquid Temperature：22.4 ℃

DASY5 Configuration
- Probe: EX3DV4 - SN3931; ConvF(7.45, 7.45, 7.45); Calibrated: 2017/9/29;
- Sensor-Surface: 1.4mm (Mechanical Surface Detection)
- Electronics: DAE4 Sn1399; Calibrated: 2017/11/16
- Phantom: SAM_Right; Type: QD000P40CD; Serial: S/N:1796
- Measurement SW: DASY52, Version 52.8 (8); SEMCAD X Version 14.6.10 (7373)

Pin=250mW/Area Scan (61x61x1): Interpolated grid: dx=1.200 mm, dy=1.200 mm
Maximum value of SAR (interpolated) = 22.2 W/kg

Pin=250mW/Zoom Scan (7x7x7)/Cube 0: Measurement grid: dx=5mm, dy=5mm, dz=5mm
Reference Value = 100.1 V/m; Power Drift = 0.17 dB
Peak SAR (extrapolated) = 29.9 W/kg
SAR(1 g) = 14.3 W/kg; SAR(10 g) = 6.39 W/kg
Maximum value of SAR (measured) = 22.1 W/kg

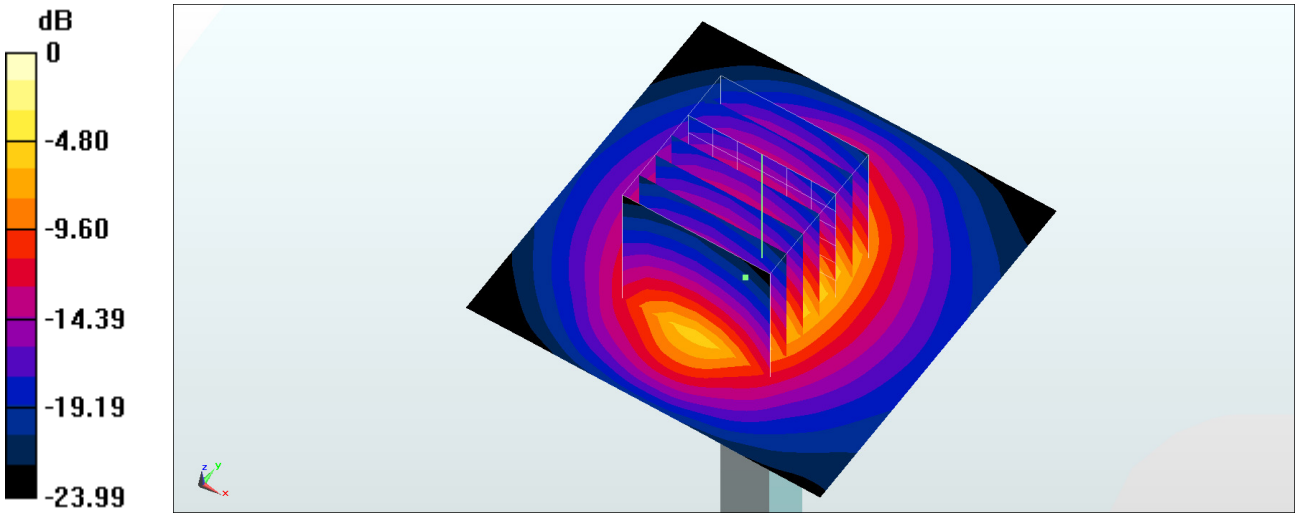

0 dB = 22.1 W/kg = 13.44 dBW/kg

System Check_Head_5250MHz

DUT: D5GHzV2-1171

Communication System: CW ; Frequency: 5250 MHz;Duty Cycle: 1:1
Medium: HSL_5G_180119 Medium parameters used: f = 5250 MHz; σ = 4.513 S/m; ε_r = 37.118; ρ = 1000 kg/m^3
Ambient Temperature：23.6 ℃; Liquid Temperature：22.6 ℃

DASY5 Configuration
- Probe: EX3DV4 - SN3931; ConvF(5.34, 5.34, 5.34); Calibrated: 2017/9/29;
- Sensor-Surface: 1.4mm (Mechanical Surface Detection)
- Electronics: DAE4 Sn1399; Calibrated: 2017/11/16
- Phantom: SAM_RIGHT; Type: QD000P40CD; Serial: 1719
- Measurement SW: DASY52, Version 52.8 (8); SEMCAD X Version 14.6.10 (7373)

Pin=100mW/Area Scan (71x71x1): Interpolated grid: dx=1.000 mm, dy=1.000 mm
Maximum value of SAR (interpolated) = 19.5 W/kg

Pin=100mW/Zoom Scan (7x7x7)/Cube 0: Measurement grid: dx=4mm, dy=4mm, dz=1.4mm
Reference Value = 68.45 V/m; Power Drift = -0.05 dB
Peak SAR (extrapolated) = 30.2 W/kg
SAR(1 g) = 7.54 W/kg; SAR(10 g) = 2.12 W/kg
Maximum value of SAR (measured) = 17.9 W/kg

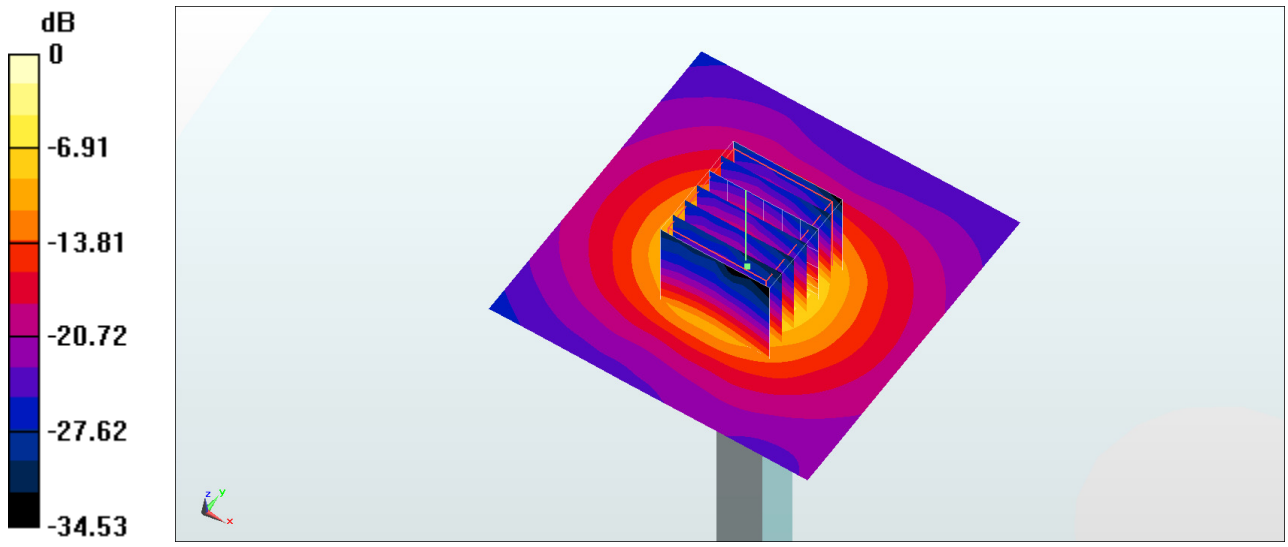

0 dB = 17.9 W/kg = 12.53 dBW/kg

System Check_Body_5250MHz

DUT: D5GHzV2-1171

Communication System: CW; Frequency: 5250 MHz;Duty Cycle: 1:1
Medium: MSL_5G_180121 Medium parameters used: f = 5250 MHz; σ = 5.537 S/m; ε_r = 47.352; ρ = 1000 kg/m^3
Ambient Temperature：23.5 ℃; Liquid Temperature：22.5 ℃

DASY5 Configuration
- Probe: EX3DV4 - SN3931; ConvF(4.7, 4.7, 4.7); Calibrated: 2017/9/29;
- Sensor-Surface: 1.4mm (Mechanical Surface Detection)
- Electronics: DAE4 Sn1399; Calibrated: 2017/11/16
- Phantom: SAM_Left; Type: QD000P40CD; Serial: S/N:1801
- Measurement SW: DASY52, Version 52.8 (8); SEMCAD X Version 14.6.10 (7373)

Pin=100mW/Area Scan (71x71x1): Interpolated grid: dx=1.000 mm, dy=1.000 mm
Maximum value of SAR (interpolated) = 17.2 W/kg

Pin=100mW/Zoom Scan (7x7x7)/Cube 0: Measurement grid: dx=4mm, dy=4mm, dz=1.4mm
Reference Value = 63.87 V/m; Power Drift = 0.00 dB
Peak SAR (extrapolated) = 30.7 W/kg
SAR(1 g) = 7.21 W/kg; SAR(10 g) = 2.06 W/kg
Maximum value of SAR (measured) = 18.5 W/kg

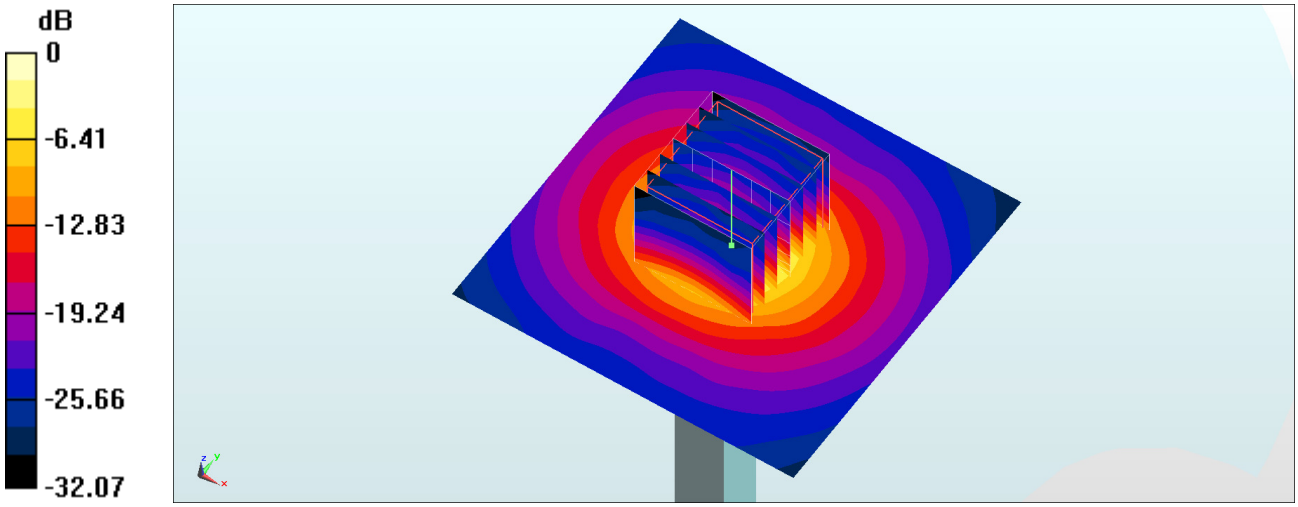

0 dB = 18.5 W/kg = 12.67 dBW/kg

System Check_Head_5600MHz

DUT: D5GHzV2-1171

Communication System: CW ; Frequency: 5600 MHz;Duty Cycle: 1:1
Medium: HSL_5G_180119 Medium parameters used: f = 5600 MHz; σ = 4.852 S/m; ε_r = 36.677; ρ = 1000 kg/m^3
Ambient Temperature：23.6 ℃; Liquid Temperature：22.6 ℃

DASY5 Configuration
- Probe: EX3DV4 - SN3925; ConvF(4.72, 4.72, 4.72); Calibrated: 2017/5/24;
- Sensor-Surface: 1.4mm (Mechanical Surface Detection)
- Electronics: DAE4 Sn853; Calibrated: 2017/7/19
- Phantom: SAM_RIGHT; Type: QD000P40CD; Serial: 1719
- Measurement SW: DASY52, Version 52.8 (8); SEMCAD X Version 14.6.10 (7373)

Pin=100mW/Area Scan (71x71x1): Interpolated grid: dx=1.000 mm, dy=1.000 mm
Maximum value of SAR (interpolated) = 19.4 W/kg

Pin=100mW/Zoom Scan (7x7x7)/Cube 0: Measurement grid: dx=4mm, dy=4mm, dz=1.4mm
Reference Value = 66.97 V/m; Power Drift = 0.02 dB
Peak SAR (extrapolated) = 34.9 W/kg
SAR(1 g) = 7.89 W/kg; SAR(10 g) = 2.21 W/kg
Maximum value of SAR (measured) = 19.8 W/kg

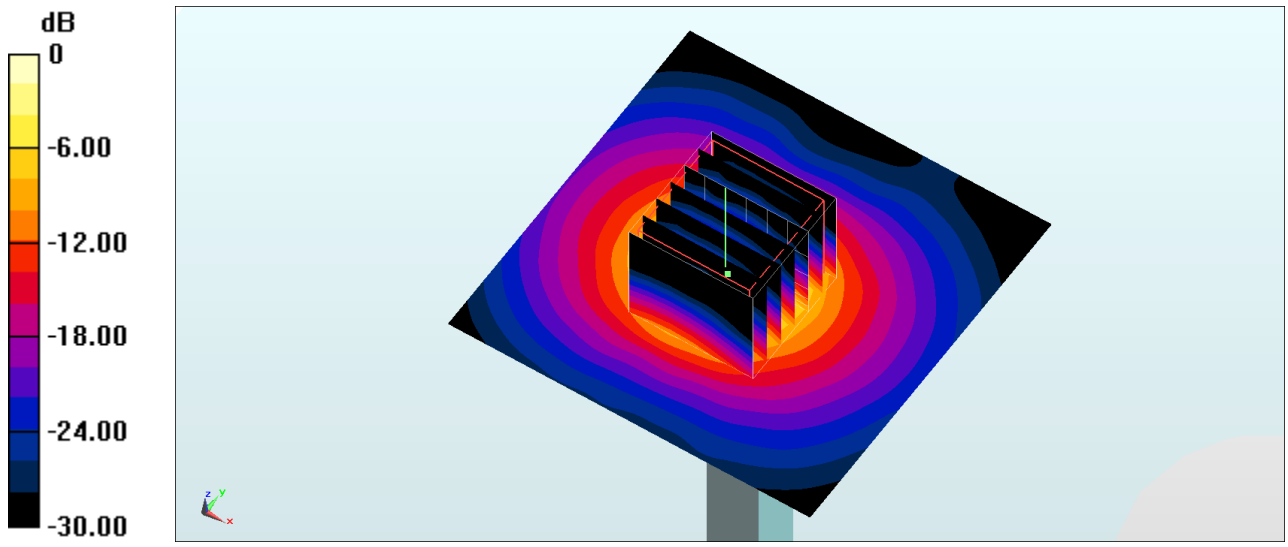

0 dB = 19.8 W/kg = 12.97 dBW/kg

System Check_Body_5600MHz

DUT: D5GHzV2-1171

Communication System: CW; Frequency: 5600 MHz;Duty Cycle: 1:1
Medium: MSL_5G_180121 Medium parameters used: f = 5600 MHz; σ = 6.012 S/m; ε_r = 46.731; ρ = 1000 kg/m^3
Ambient Temperature：23.5 ℃; Liquid Temperature：22.5 ℃

DASY5 Configuration
- Probe: EX3DV4 - SN3931; ConvF(3.99, 3.99, 3.99); Calibrated: 2017/9/29;
- Sensor-Surface: 1.4mm (Mechanical Surface Detection)
- Electronics: DAE4 Sn1399; Calibrated: 2017/11/16
- Phantom: SAM_Left; Type: QD000P40CD; Serial: S/N:1801
- Measurement SW: DASY52, Version 52.8 (8); SEMCAD X Version 14.6.10 (7373)

Pin=100mW/Area Scan (71x71x1): Interpolated grid: dx=1.000 mm, dy=1.000 mm
Maximum value of SAR (interpolated) = 20.2 W/kg

Pin=100mW/Zoom Scan (7x7x7)/Cube 0: Measurement grid: dx=4mm, dy=4mm, dz=1.4mm
Reference Value = 66.66 V/m; Power Drift = 0.01 dB
Peak SAR (extrapolated) = 36.7 W/kg
SAR(1 g) = 8.12 W/kg; SAR(10 g) = 2.3 W/kg
Maximum value of SAR (measured) = 21.3 W/kg

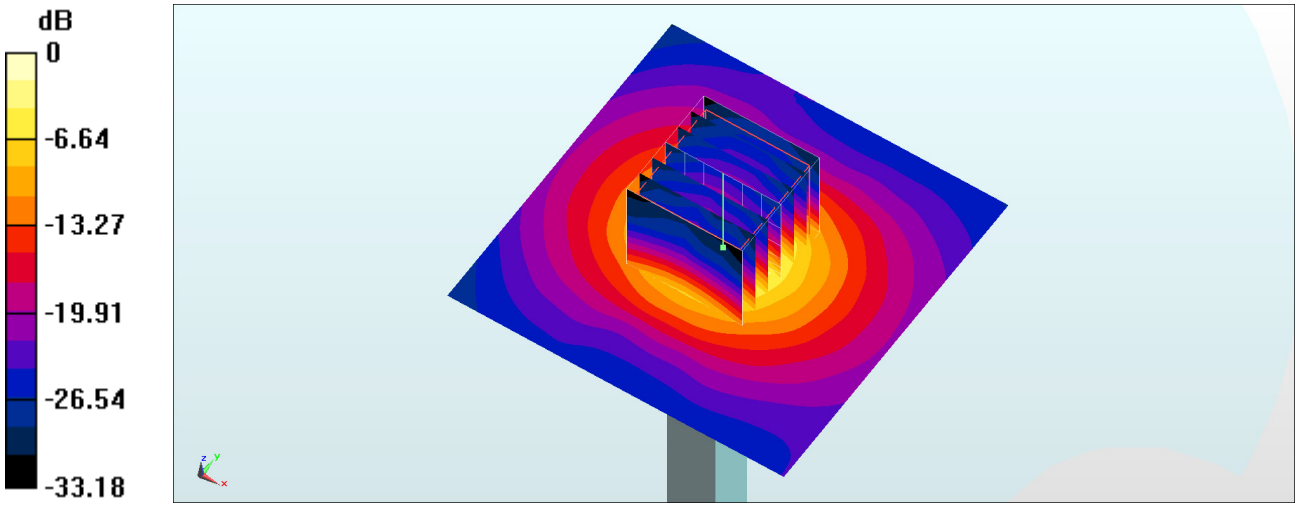

0 dB = 21.3 W/kg = 13.28 dBW/kg

System Check_Head_5750MHz

DUT: D5GHzV2-1171

Communication System: CW ; Frequency: 5750 MHz;Duty Cycle: 1:1
Medium: HSL_5G_180119 Medium parameters used: f = 5750 MHz; σ = 5.011 S/m; ε_r = 36.475; ρ = 1000 kg/m^3
Ambient Temperature：23.6 ℃; Liquid Temperature：22.6 ℃

DASY5 Configuration
- Probe: EX3DV4 - SN3931; ConvF(4.95, 4.95, 4.95); Calibrated: 2017/9/29;
- Sensor-Surface: 1.4mm (Mechanical Surface Detection)
- Electronics: DAE4 Sn1399; Calibrated: 2017/11/16
- Phantom: SAM_RIGHT; Type: QD000P40CD; Serial: 1719
- Measurement SW: DASY52, Version 52.8 (8); SEMCAD X Version 14.6.10 (7373)

Pin=100mW/Area Scan (71x71x1): Interpolated grid: dx=1.000 mm, dy=1.000 mm
Maximum value of SAR (interpolated) = 18.4 W/kg

Pin=100mW/Zoom Scan (7x7x7)/Cube 0: Measurement grid: dx=4mm, dy=4mm, dz=1.4mm
Reference Value = 66.28 V/m; Power Drift = 0.08 dB
Peak SAR (extrapolated) = 35.6 W/kg
SAR(1 g) = 8.23 W/kg; SAR(10 g) = 2.32 W/kg
Maximum value of SAR (measured) = 20.5 W/kg

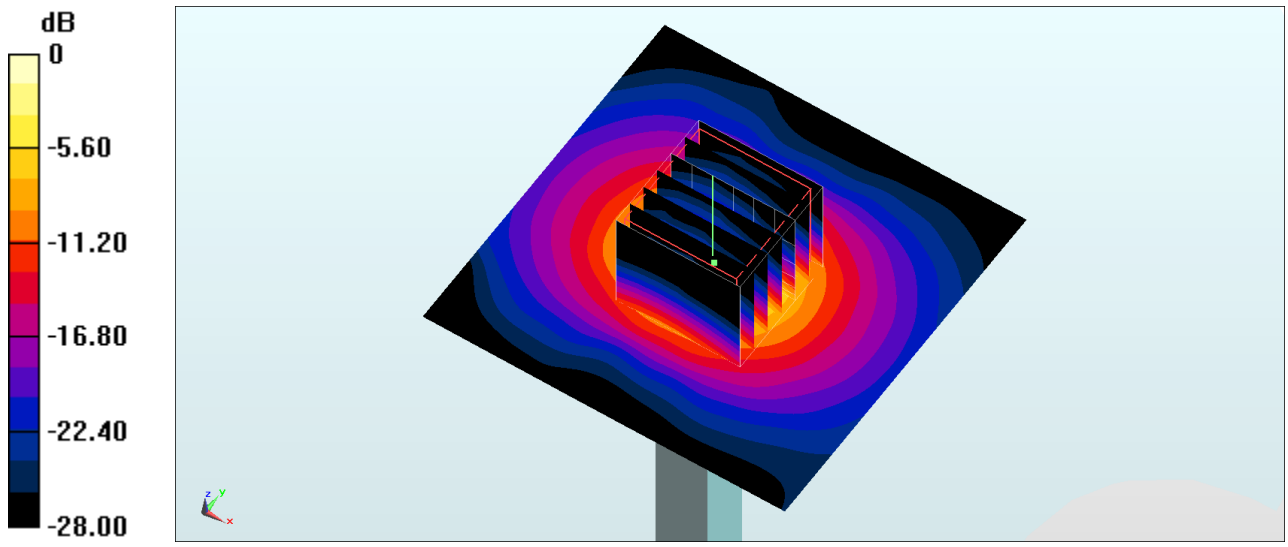

0 dB = 20.5 W/kg = 13.12 dBW/kg

System Check_Body_5750MHz

DUT: D5GHzV2-1171

Communication System: CW; Frequency: 5750 MHz;Duty Cycle: 1:1
Medium: MSL_5G_180121 Medium parameters used: f = 5750 MHz; σ = 6.223 S/m; ε_r = 46.468; ρ = 1000 kg/m^3
Ambient Temperature：23.5 ℃; Liquid Temperature：22.5 ℃

DASY5 Configuration
- Probe: EX3DV4 - SN3931; ConvF(4.32, 4.32, 4.32); Calibrated: 2017/9/29;
- Sensor-Surface: 1.4mm (Mechanical Surface Detection)
- Electronics: DAE4 Sn1399; Calibrated: 2017/11/16
- Phantom: SAM_Left; Type: QD000P40CD; Serial: S/N:1801
- Measurement SW: DASY52, Version 52.8 (8); SEMCAD X Version 14.6.10 (7373)

Pin=100mW/Area Scan (71x71x1): Interpolated grid: dx=1.000 mm, dy=1.000 mm
Maximum value of SAR (interpolated) = 18.5 W/kg

Pin=100mW/Zoom Scan (7x7x7)/Cube 0: Measurement grid: dx=4mm, dy=4mm, dz=1.4mm
Reference Value = 63.07 V/m; Power Drift = 0.01 dB
Peak SAR (extrapolated) = 34.3 W/kg
SAR(1 g) = 7.33 W/kg; SAR(10 g) = 2.08 W/kg
Maximum value of SAR (measured) = 19.4 W/kg

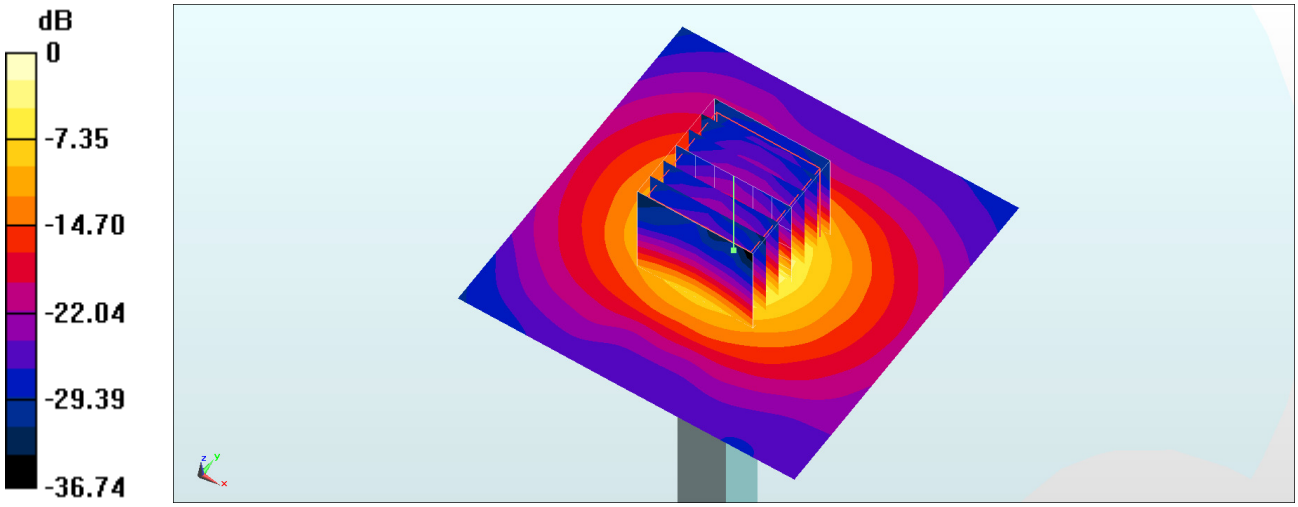

0 dB = 19.4 W/kg = 12.88 dBW/kg