FCC RADIO TEST REPORT

FCC ID	:	**IHDT56XC3**
Equipment	:	**Mobile Cellular Phone**
Brand Name	:	**Motorola**
Model Name	:	**XT1921-8**
Applicant	:	**Motorola Mobility LLC** **222 W,Merchandise Mart Plaza, Chicago IL 60654 USA**
Manufacturer	:	**Motorola Mobility LLC** **222 W,Merchandise Mart Plaza, Chicago IL 60654 USA**
Standard	:	**47 CFR Part 2, 22(H), 24(E), 27**

The product was received on Sep. 26, 208 and testing was started from Oct. 12, 2018 and completed on Oct. 16, 2018. We, SPORTON INTERNATIONAL INC., would like to declare that the tested sample has been evaluated in accordance with the test procedures given in ANSI / TIA-603-E and has been in compliance with the applicable technical standards.

The report must not be used by the client to claim product certification, approval, or endorsement by TAF or any agency of government.

The test results in this variant report apply exclusively to the tested model / sample. Without written approval of SPORTON INTERTIONAL INC. EMC & Wireless Communications Laboratory, the test report shall not be reproduced except in full.

Approved by: Joseph Lin

SPORTON INTERNATIONAL INC. EMC & Wireless Communications Laboratory

No. 52, Huaya 1st Rd., Guishan Dist., Taoyuan City, Taiwan (R.O.C.)

Table of Contents

History of this test report **3**
Summary of Test Result **4**
1 General Description **5**
1.1 Product Feature of Equipment Under Test 5
1.2 Product Specification of Equipment Under Test 6
1.3 Modification of EUT 6
1.4 Emission Designator 7
1.5 Testing Location 8
1.6 Applicable Standards 8
2 Test Configuration of Equipment Under Test **9**
2.1 Test Mode 9
2.2 Connection Diagram of Test System 10
2.3 Support Unit used in test configuration and system 10
2.4 Frequency List of Low/Middle/High Channels 11
3 Conducted Test Items **13**
3.1 Measuring Instruments 13
3.2 Conducted Output Power and ERP/EIRP 14
4 Radiated Test Items **15**
4.1 Measuring Instruments 15
4.2 Radiated Spurious Emission 16
5 List of Measuring Equipment **17**
6 Uncertainty of Evaluation **19**
Appendix A. Test Results of Conducted Test
Appendix B. Test Results of ERP/EIRP and Radiated Test

History of this test report

Report No.	Version	Description	Issued Date
FG882624C	01	Initial issue of report	Nov. 22, 2018

Summary of Test Result

Report Clause	Ref Std. Clause	Test Items	Result (PASS/FAIL)	Remark
3.2	§2.1046	Conducted Output Power	Reporting only	-
	§22.913 (a)(2)	Effective Radiated Power (Band 5)	Pass	
	§27.50 (b)(10)	Effective Radiated Power (Band 13)		
	§24.232 (c)	Equivalent Isotropic Radiated Power (Band 2)		
	§27.50 (d)(4)	Equivalent Isotropic Radiated Power (Band 4)		
-	§24.232 (d) §27.50 (d)(5)	Peak-to-Average Ratio	Not Required	-
-	§2.1049	Occupied Bandwidth	Not Required	-
-	§2.1051 §22.917 (a) §24.238 (a) §27.53 (c)(2)(4) §27.53 (h)	Conducted Band Edge Measurement (Band 2) (Band 4) (Band 5) (Band 13)	Not Required	-
-	§2.1051 §22.917 (a) §24.238 (a) §27.53 (c)(2) §27.53 (h)	Conducted Spurious Emission (Band 2) (Band 4) (Band 5) (Band 13)	Not Required	-
-	§2.1055 §22.355 §24.235 §27.54	Frequency Stability Temperature & Voltage	Not Required	-
4.2	§2.1053 §22.917 (a) §24.238 (a) §27.53 (c)(2) §27.53 (f) §27.53 (h)	Radiated Spurious Emission (Band 2) (Band 4) (Band 5) (Band 13)	Pass	Under limit 8.18 dB at 1568.000 MHz

Remark:

1. Not required means after assessing, test items are not necessary to carry out.
2. This is a variant report. All the test cases were performed on original report which can be referred to Sporton Report Number FG7D2018-03C.

Reviewed by: Wii Chang

Report Producer: Natasha Hsieh

1 General Description

1.1 Product Feature of Equipment Under Test

Product Feature	
Equipment	Mobile Cellular Phone
Brand Name	Motorola
Model Name	XT1921-8
FCC ID	IHDT56XC3
IMEI Code	**Conducted :** IMEI : 359543090002839 **Radiation :** IMEI : 359543090003555
EUT supports Radios application	CDMA/EV-DO/GSM/EGPRS/WCDMA/HSPA/LTE/GNSS/FM WLAN 11b/g/n HT20 WLAN 11a/n HT20/HT40 Bluetooth BR/EDR/LE
HW Version	PVT
EUT Stage	Identical Prototype

Remark: The above EUT's information was declared by manufacturer.

Accessory List	
AC Adapter 1	Brand Name : Motorola
	Model Name : SC-61
	Manufacturer : Acbel
AC Adapter 2	Brand Name : Motorola
	Model Name : SC-61
	Manufacturer : Chenyang
Battery	Brand Name : Motorola
	Model Name : GK40
	Manufacturer : Amperex
USB Cable	Brand Name : Saibao
	Model Name : SWT-A083A

1.2 Product Specification of Equipment Under Test

Standards-related Product Specification	
Tx Frequency	LTE Band 2: 1850.7 MHz ~ 1909.3 MHz LTE Band 4: 1710.7 MHz ~ 1754.3 MHz LTE Band 5: 824.7 MHz ~ 848.3 MHz LTE Band 13: 779.5 MHz ~ 784.5 MHz
Rx Frequency	LTE Band 2: 1930.7 MHz ~ 1989.3 MHz LTE Band 4: 2110.7 MHz ~ 2154.3 MHz LTE Band 5: 869.7 MHz ~ 893.3 MHz LTE Band 13: 748.5 MHz ~ 753.5 MHz
Bandwidth	LTE Band 2: 1.4MHz / 3MHz / 5MHz / 10MHz / 15MHz / 20MHz LTE Band 4: 1.4MHz / 3MHz / 5MHz / 10MHz / 15MHz / 20MHz LTE Band 5: 1.4MHz / 3MHz / 5MHz / 10MHz LTE Band 13: 5MHz / 10MHz
Maximum Output Power to Antenna	LTE Band 2: 23.63 dBm LTE Band 4: 23.92 dBm LTE Band 5: 23.48 dBm LTE Band 13: 23.25 dBm
Antenna Type	PIFA Antenna and Coupling type (LDS) Antenna
Antenna Gain	LTE Band 2: 0.982 dBi LTE Band 4: 0.122 dBi LTE Band 5: -0.105 dBi LTE Band 13: -0.214 dBi
Type of Modulation	QPSK / 16QAM

1.3 Modification of EUT

No modifications are made to the EUT during all test items.

1.4 Emission Designator

LTE Band 2		QPSK			16QAM		
BW (MHz)	Frequency Range (MHz)	Emission Designator (99%OBW)	Frequency Tolerance (ppm)	Maximum EIRP(W)	Emission Designator (99%OBW)	Frequency Tolerance (ppm)	Maximum EIRP(W)
1.4	1850.7 ~ 1909.3	-	-	0.2892	-	-	0.2329
3	1851.5 ~ 1908.5	-	-	0.2852	-	-	0.2428
5	1852.5 ~ 1907.5	-	-	0.2833	-	-	0.2292
10	1855.0 ~ 1905.0	-	-	0.2879	-	-	0.2209
15	1857.5 ~ 1902.5	-	-	0.2859	-	-	0.2405
20	1860.0 ~ 1900.0	-	-	0.2892	-	-	0.2329
LTE Band 4		QPSK			16QAM		
BW (MHz)	Frequency Range (MHz)	Emission Designator (99%OBW)	Frequency Tolerance (ppm)	Maximum EIRP(W)	Emission Designator (99%OBW)	Frequency Tolerance (ppm)	Maximum EIRP(W)
1.4	1710.7 ~ 1754.3	-	-	0.2536		-	0.2047
3	1711.5 ~ 1753.5	-	-	0.2490		-	0.1906
5	1712.5 ~ 1752.5	-	-	0.2479		-	0.1987
10	1715.0 ~ 1750.0	-	-	0.2479		-	0.2019
15	1717.5 ~ 1747.5	-	-	0.2490		-	0.2052
20	1720.0 ~ 1745.0	-	-	0.2378		-	0.1876
LTE Band 5		QPSK			16QAM		
BW (MHz)	Frequency Range (MHz)	Emission Designator (99%OBW)	Frequency Tolerance (ppm)	Maximum ERP(W)	Emission Designator (99%OBW)	Frequency Tolerance (ppm)	Maximum ERP(W)
1.4	824.7 ~ 848.3	-	-	0.1240	-	-	0.1160
3	825.5 ~ 847.5	-	-	0.1246	-	-	0.1179
5	826.5 ~ 846.5	-	-	0.1293	-	-	0.1184
10	829.0 ~ 844.0	-	-	0.1326	-	-	0.1121
LTE Band 13		QPSK			16QAM		
BW (MHz)	Frequency Range (MHz)	Emission Designator (99%OBW)	Frequency Tolerance (ppm)	Maximum ERP(W)	Emission Designator (99%OBW)	Frequency Tolerance (ppm)	Maximum ERP(W)
5	779.5 ~ 784.5	-	-	0.1223	-	-	0.0970
10	782.0	-	-	0.1226	-	-	0.0823

1.5 Testing Location

Sporton Lab is accredited to ISO 17025 by Taiwan Accreditation Foundation (TAF code : 1190) and the FCC designation No. TW1190 under the FCC 2.948(e) by Mutual Recognition Agreement (MRA) in FCC Test.

Test Site	SPORTON INTERNATIONAL INC.
Test Site Location	No.52, Huaya 1st Rd., Guishan Dist., Taoyuan City, Taiwan (R.O.C.) TEL: +886-3-327-3456 FAX: +886-3-328-4978
Test Site No.	**Sporton Site No.**
	TH05-HY, 03CH07-HY

Note: The test site complies with ANSI C63.4 2014 requirement.

1.6 Applicable Standards

According to the specifications of the manufacturer, the EUT must comply with the requirements of the following standards:

- ANSI C63.26-2015
- ANSI / TIA-603-E
- 47 CFR Part 2, 22(H), 24(E), 27
- FCC KDB 971168 D01 Power Meas. License Digital Systems v03r01
- FCC KDB 412172 D01 Determining ERP and EIRP v01r01

Remark:

1. All test items were verified and recorded according to the standards and without any deviation during the test.
2. This EUT has also been tested and complied with the requirements of FCC Part 15, Subpart B, recorded in a separate test report.

2 Test Configuration of Equipment Under Test

2.1 Test Mode

Antenna port conducted and radiated test items listed below are performed according to KDB 971168 D01 Power Meas. License Digital Systems v03r01 with maximum output power.

For radiated measurement, pre-scanned in three orthogonal panels, X, Y, Z. The worst cases (X plane for Band 4, Y plan for Band 5, Z plan for Band 2 and 13) were recorded in this report.

Test Items	Band	Bandwidth (MHz)						Modulation			RB #			Test Channel		
		1.4	3	5	10	15	20	QPSK	16QAM	64QAM	1	Half	Full	L	M	H
Max. Output Power	2	v	v	v	v	v	v	v	v		v	v	v	v	v	v
	4	v	v	v	v	v	v	v	v		v	v	v	v	v	v
	5	v	v	v	v	-	-	v	v		v	v	v	v	v	v
	13	-	-	v	v	-	-	v	v		v	v	v	v	v	v
E.R.P / E.I.R.P	2	v	v	v	v	v	v	v	v		v	v		v	v	v
	4	v	v	v	v	v	v	v	v		v			v	v	v
	5	v	v	v	v	-	-	v	v		v			v	v	v
	13	-	-	v	v	-	-	v	v		v			v	v	v
Radiated Spurious Emission	2	Worst Case														v
	4	Worst Case														v
	5	Worst Case														v
	13	Worst Case													v	
Remark	1. The mark "**v** " means that this configuration is chosen for testing 2. The mark "-" means that this bandwidth is not supported. 3. The device is investigated from 30MHz to 10 times of fundamental signal for radiated spurious emission test under different RB size/offset and modulations in exploratory test. Subsequently, only the worst case emissions are reported. 4. All the radiated test cases were performed with Adapter 1.															

2.2 Connection Diagram of Test System

<EUT without Accessory Mode>

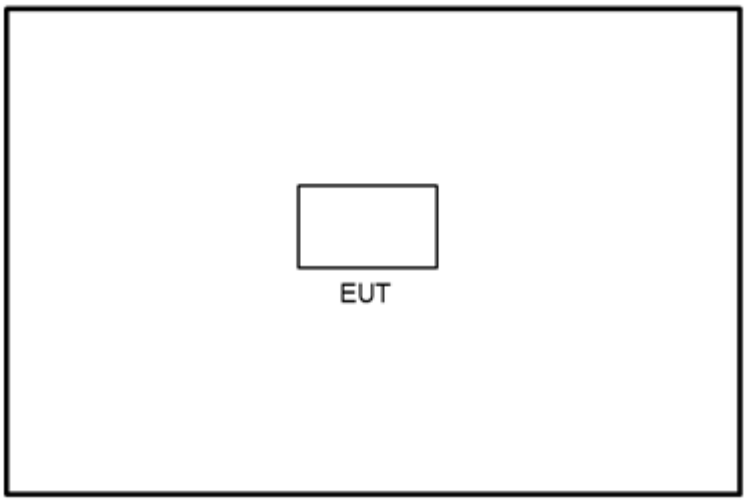

<EUT with Accessory Mode>

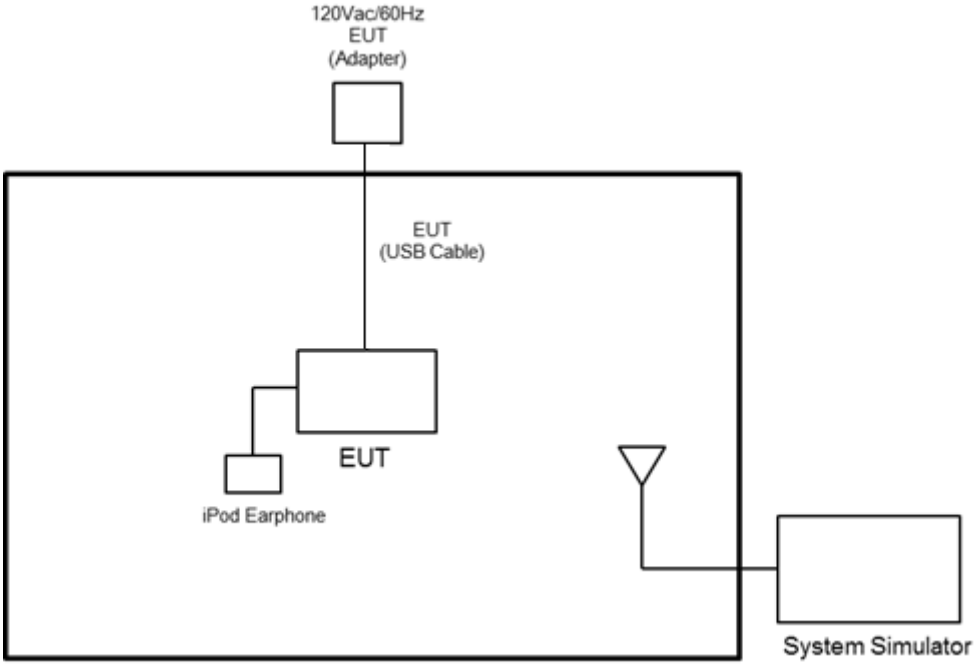

2.3 Support Unit used in test configuration and system

Item	Equipment	Trade Name	Model No.	FCC ID	Data Cable	Power Cord
1.	LTE Base Station	Anritsu	MT8820C	N/A	N/A	Unshielded, 1.8 m
2.	iPod Earphone	Apple	N/A	Verification	Unshielded, 1.0 m	N/A

2.4 Frequency List of Low/Middle/High Channels

LTE Band 2 Channel and Frequency List				
BW [MHz]	Channel/Frequency(MHz)	Lowest	Middle	Highest
20	Channel	18700	18900	19100
	Frequency	1860.0	1880.0	1900.0
15	Channel	18675	18900	19125
	Frequency	1857.5	1880.0	1902.5
10	Channel	18650	18900	19150
	Frequency	1855.0	1880.0	1905.0
5	Channel	18625	18900	19175
	Frequency	1852.5	1880.0	1907.5
3	Channel	18615	18900	19185
	Frequency	1851.5	1880.0	1908.5
1.4	Channel	18607	18900	19193
	Frequency	1850.7	1880.0	1909.3

LTE Band 4 Channel and Frequency List				
BW [MHz]	Channel/Frequency(MHz)	Lowest	Middle	Highest
20	Channel	20050	20175	20300
	Frequency	1720.0	1732.5	1745.0
15	Channel	20025	20175	20325
	Frequency	1717.5	1732.5	1747.5
10	Channel	20000	20175	20350
	Frequency	1715.0	1732.5	1750.0
5	Channel	19975	20175	20375
	Frequency	1712.5	1732.5	1752.5
3	Channel	19965	20175	20385
	Frequency	1711.5	1732.5	1753.5
1.4	Channel	19957	20175	20393
	Frequency	1710.7	1732.5	1754.3

LTE Band 5 Channel and Frequency List				
BW [MHz]	Channel/Frequency(MHz)	Lowest	Middle	Highest
10	Channel	20450	20525	20600
	Frequency	829.0	836.5	844.0
5	Channel	20425	20525	20625
	Frequency	826.5	836.5	846.5
3	Channel	20415	20525	20635
	Frequency	825.5	836.5	847.5
1.4	Channel	20407	20525	20643
	Frequency	824.7	836.5	848.3

LTE Band 13 Channel and Frequency List				
BW [MHz]	Channel/Frequency(MHz)	Lowest	Middle	Highest
10	Channel	-	23230	-
	Frequency	-	782.0	-
5	Channel	23205	23230	23255
	Frequency	779.5	782.0	784.5

3 Conducted Test Items

3.1 Measuring Instruments

See list of measuring instruments of this test report.

3.1.1 Test Setup

3.1.2 Conducted Output Power

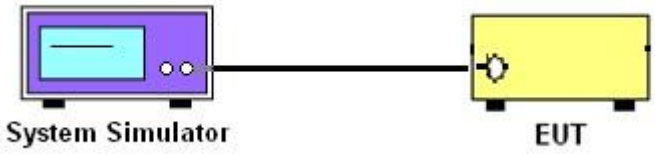

3.1.3 Test Result of Conducted Test

Please refer to Appendix A.

3.2 Conducted Output Power and ERP/EIRP

3.2.1 Description of the Conducted Output Power Measurement and ERP/EIRP Measurement

A system simulator was used to establish communication with the EUT. Its parameters were set to force the EUT transmitting at maximum output power. The measured power in the radio frequency on the transmitter output terminals shall be reported.

The ERP of mobile transmitters must not exceed 7 Watts for LTE Band 5.

The ERP of mobile transmitters must not exceed 3 Watts for LTE Band 13.

The EIRP of mobile transmitters must not exceed 2 Watts for LTE Band 2.

The EIRP of mobile transmitters must not exceed 1 Watts for LTE Band 4.

According to KDB 412172 D01 Power Approach,

EIRP = $P_T + G_T – L_C$, ERP = EIRP -2.15, where

P_T = transmitter output power in dBm

G_T = gain of the transmitting antenna in dBi

L_C = signal attenuation in the connecting cable between the transmitter and antenna in dB

3.2.2 Test Procedures

1. The transmitter output port was connected to the system simulator.
2. Set EUT at maximum power through the system simulator.
3. Select lowest, middle, and highest channels for each band and different modulation.
4. Measure and record the power level from the system simulator.

4 Radiated Test Items

4.1 Measuring Instruments

See list of measuring instruments of this test report.

4.1.1 Test Setup

For radiated test from 30MHz to 1GHz

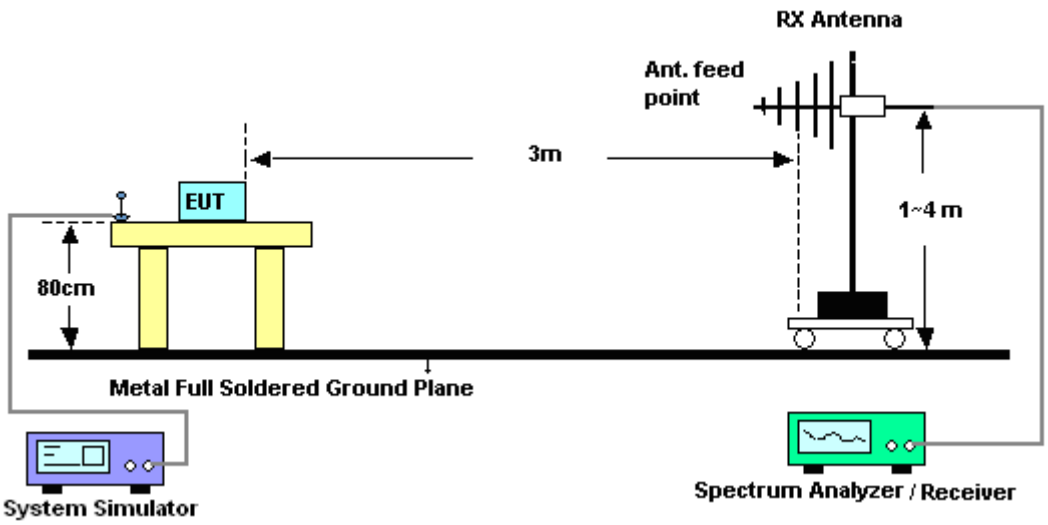

For radiated test above 1GHz

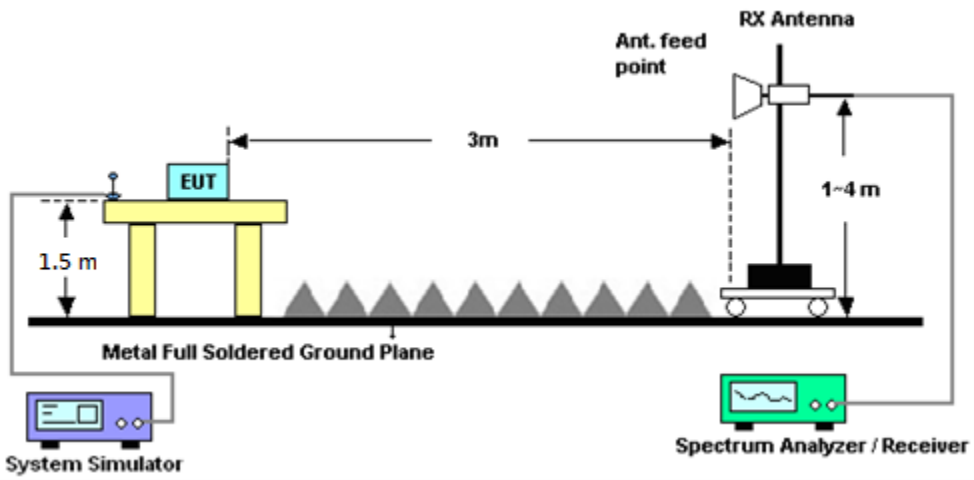

4.1.2 Test Result of Radiated Test

Please refer to Appendix B.

4.2 Radiated Spurious Emission

4.2.1 Description of Radiated Spurious Emission

The radiated spurious emission was measured by substitution method according to ANSI / TIA-603-E. The power of any emission outside of the authorized operating frequency ranges must be attenuated below the transmitter power (P) by a factor of at least 43 + 10 log (P) dB.

For LTE Band 13

For operations in the 746-758 MHz, 775-788 MHz, and 805-806 MHz bands, emissions in the band 1559-1610 MHz shall be limited to −70 dBW/MHz equivalent isotropically radiated power (EIRP) for wideband signals, and −80 dBW EIRP for discrete emissions of less than 700 Hz bandwidth.

The spectrum is scanned from 30 MHz up to a frequency including its 10th harmonic.

4.2.2 Test Procedures

The testing follows FCC KDB 971168 D01 v03r01 Section 5.8 and ANSI / TIA-603-E Section 2.2.12.

1. The EUT was placed on a turntable with 0.8 meter for frequency below 1GHz and 1.5 meter for frequency above 1GHz respectively above ground.
2. The EUT was set 3 meters from the receiving antenna, which was mounted on the antenna tower.
3. The table was rotated 360 degrees to determine the position of the highest spurious emission.
4. The height of the receiving antenna is varied between one meter and four meters to search the maximum spurious emission for both horizontal and vertical polarizations.
5. Make the measurement with the spectrum analyzer's RBW = 1MHz, VBW = 3MHz, taking the record of maximum spurious emission.
6. A horn antenna was substituted in place of the EUT and was driven by a signal generator.
7. Tune the output power of signal generator to the same emission level with EUT maximum spurious emission.
8. Taking the record of output power at antenna port.
9. Repeat step 7 to step 8 for another polarization.
10. The RF fundamental frequency should be excluded against the limit line in the operating frequency band.
    The limit line is derived from 43 + 10log(P)dB below the transmitter power P(Watts)
    EIRP (dBm) = S.G. Power – Tx Cable Loss + Tx Antenna Gain
    ERP (dBm) = EIRP - 2.15

5 List of Measuring Equipment

Instrument	Manufacturer	Model No.	Serial No.	Characteristics	Calibration Date	Test Date	Due Date	Remark
Base Station	Anritsu	MT8820C	6201341951	GSM / GPRS /WCDMA / LTE	Mar. 21, 2018	Oct. 12, 2018	Mar. 20, 2020	Conducted (TH05-HY)
Programmable Power Supply	GW Instek	PSS-2005	EL890089	1V~20V 0.5A~5A	Jan. 12, 2018	Oct. 12, 2018	Jan. 11, 2019	Conducted (TH05-HY)
Coupler	Warison	1-18GHz 20dB 25WSMA Directional Coupler	#B	1G~18GHz	Dec. 04, 2017	Oct. 12, 2018	Dec. 03, 2018	Conducted (TH05-HY)
Bilog Antenna	TESEQ	CBL 6111D&00800N1D01N-06	35419&03	30MHz to 1GHz	Dec. 18, 2017	Oct. 13, 2018~ Oct. 16, 2018	Dec. 17, 2018	Radiation (03CH07-HY)
Double Ridge Horn Antenna	ESCO	3117	00211469	1GHz ~ 18GHz	Aug. 06, 2018	Oct. 13, 2018~ Oct. 16, 2018	Aug. 05, 2019	Radiation (03CH07-HY)
Double Ridge Horn Antenna	ESCO	3117	00066583	1GHz ~ 18GHz	Aug. 06, 2018	Oct. 13, 2018~ Oct. 16, 2018	Aug. 05, 2019	Radiation (03CH07-HY)
Loop Antenna	Rohde & Schwarz	HFH2-Z2	100315	9 kHz~30 MHz	Nov. 10, 2017	Oct. 13, 2018~ Oct. 16, 2018	Nov. 09, 2018	Radiation (03CH07-HY)
Preamplifier	MITEQ	AMF-7D-00101800-30-10P	1590075	1GHz ~ 18GHz	Apr. 25, 2018	Oct. 13, 2018~ Oct. 16, 2018	Apr. 24, 2019	Radiation (03CH07-HY)
Amplifier	MITEQ	TTA1840-35-HG	1871923	18GHz~40GHz, VSWR : 2.5:1 max	Jul. 16, 2018	Oct. 13, 2018~ Oct. 16, 2018	Jul. 15, 2019	Radiation (03CH07-HY)
Preamplifier	COM-POWER	PA-103A	161241	10MHz-1GHz	May 21, 2018	Oct. 13, 2018~ Oct. 16, 2018	May 20, 2019	Radiation (03CH07-HY)
Spectrum Analyzer	Agilent	N9010A	MY53470118	10Hz~44GHz	Apr. 17, 2018	Oct. 13, 2018~ Oct. 16, 2018	Apr. 16, 2019	Radiation (03CH07-HY)
EMI Test Receiver	Agilent	N9038A (MXE)	MY53290053	20Hz to 26.5GHz	Jan. 16, 2018	Oct. 13, 2018~ Oct. 16, 2018	Jan. 15, 2019	Radiation (03CH07-HY)
RF Cable	HUBER + SUHNER	SUCOFLEX 104	MY24971/4, MY28655/4	9KHz~30MHz	Jan. 02, 2018	Oct. 13, 2018~ Oct. 16, 2018	Jan. 01, 2019	Radiation (03CH07-HY)
RF Cable	HUBER + SUHNER	SUCOFLEX 104	MY28655/4, MY24971/4, MY15682/4	30MHz~1GHz	Feb. 27, 2018	Oct. 13, 2018~ Oct. 16, 2018	Feb. 26, 2019	Radiation (03CH07-HY)
RF Cable	HUBER + SUHNER	SUCOFLEX 104	MY28655/4, MY24971/4, MY15682/4	1GHz~18GHz	Feb. 27, 2018	Oct. 13, 2018~ Oct. 16, 2018	Feb. 26, 2019	Radiation (03CH07-HY)
RF Cable	HUBER + SUHNER	SUCOFLEX 102	MY2858/2	18GHz~40GHz	Feb. 27, 2018	Oct. 13, 2018~ Oct. 16, 2018	Feb. 26, 2019	Radiation (03CH07-HY)

Instrument	Manufacturer	Model No.	Serial No.	Characteristics	Calibration Date	Test Date	Due Date	Remark
Controller	ChainTek	Chaintek 3000	N/A	Control Turn table	N/A	Oct. 13, 2018~ Oct. 16, 2018	N/A	Radiation (03CH07-HY)
Controller	Max-Full	MF7802	MF780208 368	Control Ant Mast	N/A	Oct. 13, 2018~ Oct. 16, 2018	N/A	Radiation (03CH07-HY)
Antenna Mast	Max-Full	MFA520BS	N/A	1m~4m	N/A	Oct. 13, 2018~ Oct. 16, 2018	N/A	Radiation (03CH07-HY)
Turn Table	ChainTek	Chaintek 3000	N/A	0~360 Degree	N/A	Oct. 13, 2018~ Oct. 16, 2018	N/A	Radiation (03CH07-HY)
SHF-EHF Horn Antenna	SCHWARZBE CK	BBHA 9170	BBHA9170 251	18GHz- 40GHz	Nov. 10, 2017	Oct. 13, 2018~ Oct. 16, 2018	Nov. 09, 2018	Radiation (03CH07-HY)
Signal Generator	Rohde & Schwarz	SMF100A	101107	100kHz~40GHz	May. 22, 2018	Oct. 13, 2018~ Oct. 16, 2018	May. 21, 2019	Radiation (03CH07-HY)
Software	Audix	E3 6.2009-8-24	805040046 56H	N/A	N/A	Oct. 13, 2018~ Oct. 16, 2018	N/A	Radiation (03CH07-HY)
Filter	Microwave	H1G013G1	SN477215	1.0G High Pass	Dec. 07, 2017	Oct. 13, 2018~ Oct. 16, 2018	Dec. 06, 2018	Radiation (03CH07-HY)
Filter	Microwave	H3G018G1	SN477220	3.0G High Pass	Nov. 21, 2017	Oct. 13, 2018~ Oct. 16, 2018	Nov. 20, 2018	Radiation (03CH07-HY)
Notch Filter	Wainwright	WRCT800/96 0-0.2/40-8SS K	SN22	GSM850	Nov. 03, 2017	Oct. 13, 2018~ Oct. 16, 2018	Nov. 02, 2018	Radiation (03CH07-HY)
Notch Filter	Wainwright	WRCT1747.5-0.4/40-8SS	SN2	DCS 1800	Aug. 22, 2018	Oct. 13, 2018~ Oct. 16, 2018	Aug. 21, 2019	Radiation (03CH07-HY)
Notch Filter	Wainwright	WRCT2500/2 570-10/40-10 SSK	SN1 R	LTE Band7	Aug. 22, 2018	Oct. 13, 2018~ Oct. 16, 2018	Aug. 21, 2019	Radiation (03CH07-HY)
Notch Filter	Wainwright	WRCT698/79 8-10/40 8SSK	SN1	AWS Band	Nov. 08, 2017	Oct. 13, 2018~ Oct. 16, 2018	Nov. 07, 2018	Radiation (03CH07-HY)

6 Uncertainty of Evaluation

Uncertainty of Radiated Emission Measurement (30 MHz ~ 1000 MHz)

Measuring Uncertainty for a Level of Confidence of 95% (U = 2Uc(y))	3.05

Uncertainty of Radiated Emission Measurement (1 GHz ~ 18 GHz)

Measuring Uncertainty for a Level of Confidence of 95% (U = 2Uc(y))	3.44

Uncertainty of Radiated Emission Measurement (18 GHz ~ 40 GHz)

Measuring Uncertainty for a Level of Confidence of 95% (U = 2Uc(y))	3.95

Appendix A. Test Results of Conducted Test

Conducted Output Power(Average power)

LTE Band 2 Maximum Average Power [dBm]						
BW [MHz]	RB Size	RB Offset	Mod	Lowest	Middle	Highest
20	1	0	QPSK	23.30	23.42	23.56
20	1	49		23.45	23.50	**23.63**
20	1	99		23.16	23.07	23.47
20	50	0		22.51	22.43	22.68
20	50	24		22.52	22.42	22.49
20	50	50		22.54	22.35	22.52
20	100	0		22.53	22.51	22.55
20	1	0	16-QAM	22.05	22.23	21.91
20	1	49		22.01	22.69	21.98
20	1	99		21.75	21.95	21.97
20	50	0		21.69	21.40	21.54
20	50	24		21.62	21.42	21.59
20	50	50		21.55	21.27	21.61
20	100	0		21.61	21.40	21.46
15	1	0	QPSK	23.33	23.17	23.09
15	1	37		23.58	23.37	23.39
15	1	74		23.10	23.23	23.41
15	36	0		22.56	22.44	22.47
15	36	20		22.50	22.38	22.47
15	36	39		22.31	22.32	22.46
15	75	0		22.51	22.35	22.50
15	1	0	16-QAM	22.41	21.79	21.82
15	1	37		22.83	21.89	21.99
15	1	74		22.05	21.62	21.85
15	36	0		21.48	21.42	21.49
15	36	20		21.30	21.30	21.37
15	36	39		21.35	21.25	21.52
15	75	0		21.35	21.27	21.39

LTE Band 2 Maximum Average Power [dBm]						
BW [MHz]	RB Size	RB Offset	Mod	Lowest	Middle	Highest
10	1	0	QPSK	23.41	23.12	23.16
10	1	25		23.55	23.55	23.61
10	1	49		23.09	23.09	23.19
10	25	0		22.52	22.43	22.48
10	25	12		22.58	22.38	22.54
10	25	25		22.45	22.38	22.46
10	50	0		22.55	22.32	22.50
10	1	0	16-QAM	21.94	22.04	22.01
10	1	25		22.33	22.46	22.06
10	1	49		22.03	21.83	22.18
10	25	0		21.65	21.35	21.49
10	25	12		21.82	21.34	21.56
10	25	25		21.38	21.23	21.45
10	50	0		21.59	21.37	21.51
5	1	0	QPSK	23.39	23.05	23.25
5	1	12		23.54	23.47	23.32
5	1	24		23.36	23.01	23.07
5	12	0		22.43	22.39	22.51
5	12	7		22.40	22.28	22.45
5	12	13		22.35	22.35	22.41
5	25	0		22.39	22.32	22.47
5	1	0	16-QAM	22.43	22.59	22.59
5	1	12		22.62	22.56	22.01
5	1	24		22.39	21.71	21.82
5	12	0		21.42	21.12	21.52
5	12	7		21.43	21.23	21.37
5	12	13		21.29	21.18	21.37
5	25	0		21.42	21.35	21.42

LTE Band 2 Maximum Average Power [dBm]						
BW [MHz]	RB Size	RB Offset	Mod	Lowest	Middle	Highest
3	1	0	QPSK	23.52	23.48	23.50
3	1	8		23.57	23.43	23.36
3	1	14		23.55	23.50	23.41
3	8	0		22.71	22.60	22.72
3	8	4		22.75	22.51	22.59
3	8	7		22.75	22.45	22.63
3	15	0		22.73	22.60	22.67
3	1	0	16-QAM	22.87	22.34	22.05
3	1	8		22.83	22.38	22.10
3	1	14		22.04	21.95	21.77
3	8	0		21.68	21.61	21.72
3	8	4		21.74	21.61	21.63
3	8	7		21.74	21.55	21.73
3	15	0		21.77	21.64	21.63
1.4	1	0	QPSK	23.55	23.36	23.50
1.4	1	3		23.59	23.33	23.48
1.4	1	5		23.53	23.35	23.39
1.4	3	0		23.53	23.43	23.63
1.4	3	1		23.56	23.52	23.60
1.4	3	3		23.54	23.56	23.62
1.4	6	0		22.53	22.46	22.56
1.4	1	0	16-QAM	22.17	21.92	22.67
1.4	1	3		22.53	22.06	22.69
1.4	1	5		21.91	22.26	22.19
1.4	3	0		22.23	22.36	22.48
1.4	3	1		22.45	22.69	22.61
1.4	3	3		22.54	22.52	22.41
1.4	6	0		21.47	21.36	21.53

LTE Band 4 Maximum Average Power [dBm]						
BW [MHz]	RB Size	RB Offset	Mod	Lowest	Middle	Highest
20	1	0	QPSK	23.35	23.45	23.63
20	1	49		23.37	23.38	23.64
20	1	99		23.40	23.14	23.11
20	50	0		22.43	22.37	22.64
20	50	24		22.39	22.35	22.66
20	50	50		22.50	22.37	22.53
20	100	0		22.43	22.43	22.65
20	1	0	16-QAM	21.64	22.32	22.38
20	1	49		21.69	22.52	22.61
20	1	99		21.85	22.00	21.84
20	50	0		21.50	21.36	21.62
20	50	24		21.46	21.35	21.63
20	50	50		21.49	21.38	21.58
20	100	0		21.40	21.50	21.60
15	1	0	QPSK	23.43	23.38	23.66
15	1	37		23.42	23.64	23.63
15	1	74		23.84	23.39	23.65
15	36	0		22.73	22.70	23.00
15	36	20		22.74	22.66	22.80
15	36	39		22.76	22.69	22.79
15	75	0		22.75	22.71	22.88
15	1	0	16-QAM	22.16	22.41	22.68
15	1	37		22.92	22.68	22.94
15	1	74		23.00	22.39	22.94
15	36	0		21.66	21.79	21.96
15	36	20		21.80	21.58	21.88
15	36	39		21.81	21.69	21.82
15	75	0		21.73	21.73	21.88

LTE Band 4 Maximum Average Power [dBm]						
BW [MHz]	RB Size	RB Offset	Mod	Lowest	Middle	Highest
10	1	0	QPSK	23.33	23.31	23.56
10	1	25		23.68	23.68	23.82
10	1	49		23.52	23.39	23.45
10	25	0		22.67	22.63	22.82
10	25	12		22.68	22.57	22.81
10	25	25		22.69	22.64	22.84
10	50	0		22.70	22.62	22.76
10	1	0	16-QAM	22.08	22.31	22.55
10	1	25		22.34	22.71	22.93
10	1	49		22.07	21.82	22.21
10	25	0		21.84	21.63	21.89
10	25	12		21.76	21.58	21.88
10	25	25		21.76	21.64	21.72
10	50	0		21.78	21.63	21.74
5	1	0	QPSK	23.31	23.48	23.74
5	1	12		23.74	23.79	23.82
5	1	24		23.56	23.48	23.70
5	12	0		22.63	22.77	22.79
5	12	7		22.84	22.69	22.86
5	12	13		22.80	22.65	22.87
5	25	0		22.80	22.67	22.73
5	1	0	16-QAM	22.74	22.70	22.86
5	1	12		22.86	22.69	22.73
5	1	24		22.08	22.33	22.17
5	12	0		21.60	21.60	21.67
5	12	7		21.92	21.70	21.87
5	12	13		21.79	21.58	21.89
5	25	0		21.76	21.59	21.94

LTE Band 4 Maximum Average Power [dBm]						
BW [MHz]	RB Size	RB Offset	Mod	Lowest	Middle	Highest
3	1	0	QPSK	23.61	23.70	23.65
3	1	8		23.79	23.63	23.84
3	1	14		23.83	23.66	23.81
3	8	0		22.84	22.92	22.83
3	8	4		22.98	22.88	22.88
3	8	7		22.92	22.91	22.87
3	15	0		22.94	22.88	22.86
3	1	0	16-QAM	22.22	22.10	22.68
3	1	8		22.21	22.66	22.48
3	1	14		22.16	22.66	22.55
3	8	0		21.66	21.87	21.83
3	8	4		21.98	21.95	21.85
3	8	7		21.96	21.96	21.88
3	15	0		21.98	21.89	21.95
1.4	1	0	QPSK	23.84	23.75	23.71
1.4	1	3		23.83	23.85	23.86
1.4	1	5		23.73	23.58	23.60
1.4	3	0		23.86	23.85	23.90
1.4	3	1		23.83	23.78	23.86
1.4	3	3		23.87	23.81	**23.92**
1.4	6	0		22.94	22.98	22.84
1.4	1	0	16-QAM	22.39	22.99	22.23
1.4	1	3		22.49	22.97	22.81
1.4	1	5		22.31	22.24	22.97
1.4	3	0		22.61	22.80	22.87
1.4	3	1		22.89	22.83	22.78
1.4	3	3		22.86	22.80	22.74
1.4	6	0		21.71	21.69	21.86

LTE Band 5 Maximum Average Power [dBm]						
BW [MHz]	RB Size	RB Offset	Mod	Lowest	Middle	Highest
10	1	0	QPSK	**23.48**	23.46	23.42
10	1	25		23.32	23.42	23.38
10	1	49		23.36	23.40	23.31
10	25	0		22.80	22.79	22.59
10	25	12		22.71	22.71	22.59
10	25	25		22.60	22.77	22.49
10	50	0		22.78	22.57	22.52
10	1	0	16-QAM	22.09	22.13	22.07
10	1	25		22.52	22.42	22.75
10	1	49		22.27	22.15	21.92
10	25	0		21.20	21.29	21.33
10	25	12		21.42	21.31	21.25
10	25	25		21.38	21.30	21.27
10	50	0		21.28	21.22	21.23
5	1	0	QPSK	23.27	23.26	23.30
5	1	12		23.25	23.27	23.37
5	1	24		23.27	23.21	23.25
5	12	0		22.82	22.92	22.84
5	12	7		22.85	22.96	22.84
5	12	13		22.81	22.93	22.70
5	25	0		22.81	22.96	22.85
5	1	0	16-QAM	22.99	22.77	22.98
5	1	12		22.54	22.63	22.95
5	1	24		22.44	22.91	21.79
5	12	0		21.16	21.28	21.30
5	12	7		21.20	21.24	21.25
5	12	13		21.14	21.16	21.20
5	25	0		21.10	21.27	21.40

LTE Band 5 Maximum Average Power [dBm]						
BW [MHz]	RB Size	RB Offset	Mod	Lowest	Middle	Highest
3	1	0	QPSK	23.16	23.17	23.16
3	1	8		23.20	23.15	23.21
3	1	14		23.14	23.17	23.15
3	8	0		22.95	22.95	23.00
3	8	4		22.90	22.93	22.83
3	8	7		22.71	22.97	22.87
3	15	0		22.78	22.98	22.90
3	1	0	16-QAM	22.97	22.92	22.38
3	1	8		22.34	22.92	22.34
3	1	14		22.57	22.94	21.99
3	8	0		21.19	21.15	21.21
3	8	4		21.14	21.10	21.13
3	8	7		21.09	21.05	21.04
3	15	0		20.95	20.97	20.95
1.4	1	0	QPSK	23.07	23.11	23.08
1.4	1	3		22.97	23.08	22.96
1.4	1	5		22.89	23.08	22.91
1.4	3	0		23.14	23.09	23.17
1.4	3	1		23.18	23.17	23.08
1.4	3	3		23.11	23.19	23.06
1.4	6	0		22.94	22.95	22.83
1.4	1	0	16-QAM	22.62	22.55	22.32
1.4	1	3		22.54	22.90	22.79
1.4	1	5		22.37	22.54	22.53
1.4	3	0		22.63	22.73	22.69
1.4	3	1		22.71	22.80	22.62
1.4	3	3		22.59	22.78	22.57
1.4	6	0		21.16	21.19	21.11

LTE Band 13 Maximum Average Power [dBm]						
BW [MHz]	RB Size	RB Offset	Mod	Lowest	Middle	Highest
10	1	0	QPSK	-	**23.25**	-
10	1	25			23.21	
10	1	49			23.03	
10	25	0			22.19	
10	25	12			22.04	
10	25	25			22.04	
10	50	0			22.09	
10	1	0	16-QAM		21.45	
10	1	25			21.52	
10	1	49			21.34	
10	25	0			21.22	
10	25	12			21.04	
10	25	25			21.12	
10	50	0			21.02	
5	1	0	QPSK	23.11	22.71	22.87
5	1	12		23.17	23.24	23.09
5	1	24		23.11	22.87	22.88
5	12	0		22.13	22.09	21.97
5	12	7		22.16	22.11	22.02
5	12	13		22.15	21.97	21.98
5	25	0		22.06	22.00	22.03
5	1	0	16-QAM	21.71	21.46	21.67
5	1	12		21.76	22.23	21.84
5	1	24		21.88	21.19	21.38
5	12	0		20.73	20.98	20.86
5	12	7		21.03	21.09	21.09
5	12	13		21.03	20.92	20.99
5	25	0		21.15	21.05	21.00

Appendix B. Test Results of ERP/EIRP and Radiated Test

ERP/EIRP

LTE Band 2 / 1.4MHz (Average) (GT - LC = 0.982 dB)							
Channel	Mode	RB		Conducted		EIRP	
		Size	Offset	Power (dBm)	Power (Watts)	EIRP(dBm)	EIRP(W)
Lowest	QPSK	3	0	23.53	0.2254	24.51	0.2826
Middle		3	0	23.43	0.2203	24.41	0.2762
Highest		3	0	23.63	0.2307	24.61	0.2892
Lowest	16QAM	1	3	22.53	0.1791	23.51	0.2245
Middle		1	3	22.06	0.1607	23.04	0.2015
Highest		1	3	22.69	0.1858	23.67	0.2329
Limit	EIRP < 2W			Result		PASS	

LTE Band 2 / 3MHz (Average) (GT - LC = 0.982 dB)							
Channel	Mode	RB		Conducted		EIRP	
		Size	Offset	Power (dBm)	Power (Watts)	EIRP(dBm)	EIRP(W)
Lowest	QPSK	1	8	23.57	0.2275	24.55	0.2852
Middle		1	8	23.43	0.2203	24.41	0.2762
Highest		1	8	23.36	0.2168	24.34	0.2718
Lowest	16QAM	1	0	22.87	0.1936	23.85	0.2428
Middle		1	0	22.34	0.1714	23.32	0.2149
Highest		1	0	22.05	0.1603	23.03	0.2010
Limit	EIRP < 2W			Result		PASS	

LTE Band 2 / 5MHz (Average) (GT - LC = 0.982 dB)							
Channel	Mode	RB		Conducted		EIRP	
		Size	Offset	Power (dBm)	Power (Watts)	EIRP(dBm)	EIRP(W)
Lowest	QPSK	1	12	23.54	0.2259	24.52	0.2833
Middle		1	12	23.47	0.2223	24.45	0.2787
Highest		1	12	23.32	0.2148	24.30	0.2693
Lowest	16QAM	1	12	22.62	0.1828	23.60	0.2292
Middle		1	12	22.56	0.1803	23.54	0.2260
Highest		1	12	22.01	0.1589	22.99	0.1992
Limit	EIRP < 2W			Result		PASS	

LTE Band 2 / 10MHz (Average) (GT - LC = 0.982 dB)							
Channel	Mode	RB		Conducted		EIRP	
		Size	Offset	Power (dBm)	Power (Watts)	EIRP(dBm)	EIRP(W)
Lowest	QPSK	1	25	23.55	0.2265	24.53	0.2839
Middle		1	25	23.55	0.2265	24.53	0.2839
Highest		1	25	23.61	0.2296	24.59	0.2879
Lowest	16QAM	1	25	22.33	0.1710	23.31	0.2144
Middle		1	25	22.46	0.1762	23.44	0.2209
Highest		1	25	22.06	0.1607	23.04	0.2015
Limit	EIRP < 2W			Result		PASS	

LTE Band 2 / 15MHz (Average) (GT - LC = 0.982 dB)							
Channel	Mode	RB		Conducted		EIRP	
		Size	Offset	Power (dBm)	Power (Watts)	EIRP(dBm)	EIRP(W)
Lowest	QPSK	1	37	23.58	0.2280	24.56	0.2859
Middle		1	37	23.37	0.2173	24.35	0.2724
Highest		1	37	23.39	0.2183	24.37	0.2737
Lowest	16QAM	1	37	22.83	0.1919	23.81	0.2405
Middle		1	37	21.89	0.1545	22.87	0.1937
Highest		1	37	21.99	0.1581	22.97	0.1982
Limit	EIRP < 2W			Result		PASS	

LTE Band 2 / 20MHz (Average) (GT - LC = 0.982 dB)							
Channel	Mode	RB		Conducted		EIRP	
		Size	Offset	Power (dBm)	Power (Watts)	EIRP(dBm)	EIRP(W)
Lowest	QPSK	1	49	23.45	0.2213	24.43	0.2775
Middle		1	49	23.50	0.2239	24.48	0.2807
Highest		1	49	23.63	0.2307	24.61	0.2892
Lowest	16QAM	1	49	22.01	0.1589	22.99	0.1992
Middle		1	49	22.69	0.1858	23.67	0.2329
Highest		1	49	21.98	0.1578	22.96	0.1978
Limit	EIRP < 2W			Result		PASS	

LTE Band 4 / 1.4MHz (Average) (GT - LC = 0.122 dB)							
Channel	Mode	RB		Conducted		EIRP	
		Size	Offset	Power (dBm)	Power (Watts)	EIRP(dBm)	EIRP(W)
Lowest	QPSK	3	3	23.87	0.2438	23.99	0.2507
Middle		3	3	23.81	0.2404	23.93	0.2473
Highest		3	3	23.92	0.2466	24.04	0.2536
Lowest	16QAM	1	0	22.39	0.1734	22.51	0.1783
Middle		1	0	22.99	0.1991	23.11	0.2047
Highest		1	0	22.23	0.1671	22.35	0.1719
Limit	EIRP < 1W			Result		PASS	

LTE Band 4 / 3MHz (Average) (GT - LC = 0.122 dB)							
Channel	Mode	RB		Conducted		EIRP	
		Size	Offset	Power (dBm)	Power (Watts)	EIRP(dBm)	EIRP(W)
Lowest	QPSK	1	8	23.79	0.2393	23.91	0.2462
Middle		1	8	23.63	0.2307	23.75	0.2372
Highest		1	8	23.84	0.2421	23.96	0.2490
Lowest	16QAM	1	0	22.22	0.1667	22.34	0.1715
Middle		1	0	22.10	0.1622	22.22	0.1668
Highest		1	0	22.68	0.1854	22.80	0.1906
Limit	EIRP < 1W			Result		PASS	

LTE Band 4 / 5MHz (Average) (GT - LC = 0.122 dB)							
Channel	Mode	RB		Conducted		EIRP	
		Size	Offset	Power (dBm)	Power (Watts)	EIRP(dBm)	EIRP(W)
Lowest	QPSK	1	12	23.74	0.2366	23.86	0.2433
Middle		1	12	23.79	0.2393	23.91	0.2462
Highest		1	12	23.82	0.2410	23.94	0.2479
Lowest	16QAM	1	0	22.74	0.1879	22.86	0.1933
Middle		1	0	22.70	0.1862	22.82	0.1915
Highest		1	0	22.86	0.1932	22.98	0.1987
Limit	EIRP < 1W			Result		PASS	

LTE Band 4 / 10MHz (Average) (GT - LC = 0.122 dB)							
Channel	Mode	RB		Conducted		EIRP	
		Size	Offset	Power (dBm)	Power (Watts)	EIRP(dBm)	EIRP(W)
Lowest	QPSK	1	25	23.68	0.2333	23.80	0.2400
Middle		1	25	23.68	0.2333	23.80	0.2400
Highest		1	25	23.82	0.2410	23.94	0.2479
Lowest	16QAM	1	25	22.34	0.1714	22.46	0.1763
Middle		1	25	22.71	0.1866	22.83	0.1920
Highest		1	25	22.93	0.1963	23.05	0.2019
Limit	EIRP < 1W			Result		PASS	

LTE Band 4 / 15MHz (Average) (GT - LC = 0.122 dB)							
Channel	Mode	RB		Conducted		EIRP	
		Size	Offset	Power (dBm)	Power (Watts)	EIRP(dBm)	EIRP(W)
Lowest	QPSK	1	74	23.84	0.2421	23.96	0.2490
Middle		1	74	23.39	0.2183	23.51	0.2245
Highest		1	74	23.65	0.2317	23.77	0.2383
Lowest	16QAM	1	74	23.00	0.1995	23.12	0.2052
Middle		1	74	22.39	0.1734	22.51	0.1783
Highest		1	74	22.94	0.1968	23.06	0.2024
Limit	EIRP < 1W			Result		PASS	

LTE Band 4 / 20MHz (Average) (GT - LC = 0.122 dB)							
Channel	Mode	RB		Conducted		EIRP	
		Size	Offset	Power (dBm)	Power (Watts)	EIRP(dBm)	EIRP(W)
Lowest	QPSK	1	49	23.37	0.2173	23.49	0.2235
Middle		1	49	23.38	0.2178	23.50	0.2240
Highest		1	49	23.64	0.2312	23.76	0.2378
Lowest	16QAM	1	49	21.69	0.1476	21.81	0.1518
Middle		1	49	22.52	0.1786	22.64	0.1837
Highest		1	49	22.61	0.1824	22.73	0.1876
Limit	EIRP < 1W			Result		PASS	

LTE Band 5 / 1.4MHz (Average) (GT - LC = -0.105 dB)							
Channel	Mode	RB		Conducted		ERP	
		Size	Offset	Power (dBm)	Power (Watts)	ERP(dBm)	ERP(W)
Lowest	QPSK	3	3	23.11	0.2046	20.86	0.1218
Middle		3	3	23.19	0.2084	20.94	0.1240
Highest		3	3	23.06	0.2023	20.81	0.1204
Lowest	16QAM	1	3	22.54	0.1795	20.29	0.1068
Middle		1	3	22.90	0.1950	20.65	0.1160
Highest		1	3	22.79	0.1901	20.54	0.1131
Limit	ERP < 7W			Result		PASS	

LTE Band 5 / 3MHz (Average) (GT - LC = -0.105 dB)							
Channel	Mode	RB		Conducted		ERP	
		Size	Offset	Power (dBm)	Power (Watts)	ERP(dBm)	ERP(W)
Lowest	QPSK	1	8	23.20	0.2089	20.95	0.1243
Middle		1	8	23.15	0.2065	20.90	0.1229
Highest		1	8	23.21	0.2094	20.96	0.1246
Lowest	16QAM	1	0	22.97	0.1982	20.72	0.1179
Middle		1	0	22.92	0.1959	20.67	0.1165
Highest		1	0	22.38	0.1730	20.13	0.1029
Limit	ERP < 7W			Result		PASS	

LTE Band 5 / 5MHz (Average) (GT - LC = -0.105 dB)							
Channel	Mode	RB		Conducted		ERP	
		Size	Offset	Power (dBm)	Power (Watts)	ERP(dBm)	ERP(W)
Lowest	QPSK	1	12	23.25	0.2113	21.00	0.1257
Middle		1	12	23.27	0.2123	21.02	0.1263
Highest		1	12	23.37	0.2173	21.12	0.1293
Lowest	16QAM	1	0	22.99	0.1991	20.74	0.1184
Middle		1	0	22.77	0.1892	20.52	0.1126
Highest		1	0	22.98	0.1986	20.73	0.1182
Limit	ERP < 7W			Result		PASS	

LTE Band 5 / 10MHz (Average) (GT - LC = -0.105 dB)							
Channel	Mode	RB		Conducted		ERP	
		Size	Offset	Power (dBm)	Power (Watts)	ERP(dBm)	ERP(W)
Lowest	QPSK	1	0	23.48	0.2228	21.23	0.1326
Middle		1	0	23.46	0.2218	21.21	0.1320
Highest		1	0	23.42	0.2198	21.17	0.1308
Lowest	16QAM	1	25	22.52	0.1786	20.27	0.1063
Middle		1	25	22.42	0.1746	20.17	0.1039
Highest		1	25	22.75	0.1884	20.50	0.1121
Limit	ERP < 7W			Result		PASS	

LTE Band 13 / 5MHz (Average) (GT - LC = -0.214 dB)							
Channel	Mode	RB		Conducted		ERP	
		Size	Offset	Power (dBm)	Power (Watts)	ERP(dBm)	ERP(W)
Lowest	QPSK	1	12	23.17	0.2075	20.81	0.1204
Middle		1	12	23.24	0.2109	20.88	0.1223
Highest		1	12	23.09	0.2037	20.73	0.1182
Lowest	16QAM	1	12	21.76	0.1500	19.40	0.0870
Middle		1	12	22.23	0.1671	19.87	0.0970
Highest		1	12	21.84	0.1528	19.48	0.0886
Limit	ERP < 3W			Result		PASS	

LTE Band 13 / 10MHz (Average) (GT - LC = -0.214 dB)							
Channel	Mode	RB		Conducted		ERP	
		Size	Offset	Power (dBm)	Power (Watts)	ERP(dBm)	ERP(W)
Lowest	QPSK	-	-	-	-	-	-
Middle		1	0	23.25	0.2113	20.89	0.1226
Highest		-	-	-	-	-	-
Lowest	16QAM	-	-	-	-	-	-
Middle		1	25	21.52	0.1419	19.16	0.0823
Highest		-	-	-	-	-	-
Limit	ERP < 3W			Result		PASS	

Radiated Spurious Emission

LTE Band 2

LTE Band 2 / 20MHz / QPSK									
Channel	Frequency (MHz)	EIRP (dBm)	Limit (dBm)	Over Limit (dB)	SPA Reading (dBm)	S.G. Power (dBm)	TX Cable loss (dB)	TX Antenna Gain (dBi)	Polarization (H/V)
Highest	3798	-57.36	-13	-44.36	-78.23	-64.02	1.70	8.36	H
	5700	-48.51	-13	-35.51	-74.12	-55.55	2.74	9.78	H
	7602	-50.38	-13	-37.38	-77.88	-59.84	2.40	11.86	H
									H
									H
									H
									H
	3798	-57.49	-13	-44.49	-78.41	-64.15	1.70	8.36	V
	5700	-47.54	-13	-34.54	-73.14	-54.58	2.74	9.78	V
	7602	-50.06	-13	-37.06	-77.82	-59.52	2.40	11.86	V
									V
									V
									V
									V

Remark: Spurious emissions within 30-1000MHz were found more than 20dB below limit line.

LTE Band 4

LTE Band 4 / 20MHz / QPSK									
Channel	Frequency (MHz)	EIRP (dBm)	Limit (dBm)	Over Limit (dB)	SPA Reading (dBm)	S.G. Power (dBm)	TX Cable loss (dB)	TX Antenna Gain (dBi)	Polarization (H/V)
Highest	3492	-54.92	-13	-41.92	-76.07	-61.28	1.60	7.96	H
	5232	-44.03	-13	-31.03	-68.54	-51.26	2.47	9.70	H
	6978	-50.92	-13	-37.92	-77.88	-59.1	2.60	10.77	H
									H
									H
									H
									H
	3492	-55.90	-13	-42.90	-76.9	-62.26	1.60	7.96	V
	5232	-49.39	-13	-36.39	-73.77	-56.62	2.47	9.70	V
	6978	-51.35	-13	-38.35	-78.35	-59.53	2.60	10.77	V
									V
									V
									V
									V

Remark: Spurious emissions within 30-1000MHz were found more than 20dB below limit line.

LTE Band 5

LTE Band 5 / 10MHz / QPSK									
Channel	Frequency (MHz)	ERP (dBm)	Limit (dBm)	Over Limit (dB)	SPA Reading (dBm)	S.G. Power (dBm)	TX Cable loss (dB)	TX Antenna Gain (dBi)	Polarization (H/V)
Highest	1688	-59.88	-13	-46.88	-72.5	-61.51	1.00	4.77	H
	2536	-43.42	-13	-30.42	-60.04	-45.4	1.30	5.43	H
	3376	-56.56	-13	-43.56	-76.6	-60.3	1.57	7.45	H
									H
									H
									H
									H
	1688	-54.96	-13	-41.96	-68.04	-56.59	1.00	4.77	V
	2536	-42.72	-13	-29.72	-60.83	-44.7	1.30	5.43	V
	3376	-54.95	-13	-41.95	-75.12	-58.69	1.57	7.45	V
									V
									V
									V
									V

Remark: Spurious emissions within 30-1000MHz were found more than 20dB below limit line.

LTE Band 13

LTE Band 13 / 10MHz / QPSK									
Channel	Frequency (MHz)	ERP (dBm)	Limit (dBm)	Over Limit (dB)	SPA Reading (dBm)	S.G. Power (dBm)	TX Cable loss (dB)	TX Antenna Gain (dBi)	Polarization (H/V)
Middle	1568	-50.42	-42.15	-8.27	-62.03	-52.44	0.94	5.11	H
	2344	-38.90	-13	-25.90	-55.8	-40.44	1.24	4.93	H
	3128	-58.82	-13	-45.82	-77.57	-61.55	1.49	6.36	H
									H
									H
									H
									H
	1568	-50.33	-42.15	-8.18	-62.44	-52.35	0.94	5.11	V
	2344	-35.26	-13	-22.26	-52.57	-36.8	1.24	4.93	V
	3128	-57.88	-13	-44.88	-77.35	-60.61	1.49	6.36	V
									V
									V
									V
									V

Remark: Spurious emissions within 30-1000MHz were found more than 20dB below limit line.