System Check_Head_750MHz

DUT: D750V3-1012

Communication System: CW; Frequency: 750 MHz;Duty Cycle: 1:1
Medium: HSL_750_180109 Medium parameters used: f = 750 MHz; σ = 0.898 S/m; ε_r = 40.812; ρ = 1000 kg/m^3
Ambient Temperature：23.2 ℃; Liquid Temperature：22.2 ℃

DASY5 Configuration
- Probe: ES3DV3 - SN3270; ConvF(6.34, 6.34, 6.34); Calibrated: 2017/9/25;
- Sensor-Surface: 3mm (Mechanical Surface Detection)
- Electronics: DAE4 Sn854; Calibrated: 2017/5/2
- Phantom: SAM-Right; Type: SAM; Serial: TP-1503
- Measurement SW: DASY52, Version 52.8 (8); SEMCAD X Version 14.6.10 (7373)

Pin=250mW/Area Scan (61x61x1): Interpolated grid: dx=1.500 mm, dy=1.500 mm
Maximum value of SAR (interpolated) = 2.59 W/kg

Pin=250mW/Zoom Scan (5x5x7)/Cube 0: Measurement grid: dx=8mm, dy=8mm, dz=5mm
Reference Value = 55.17 V/m; Power Drift = -0.08 dB
Peak SAR (extrapolated) = 3.08 W/kg
SAR(1 g) = 2.09 W/kg; SAR(10 g) = 1.4 W/kg
Maximum value of SAR (measured) = 2.43 W/kg

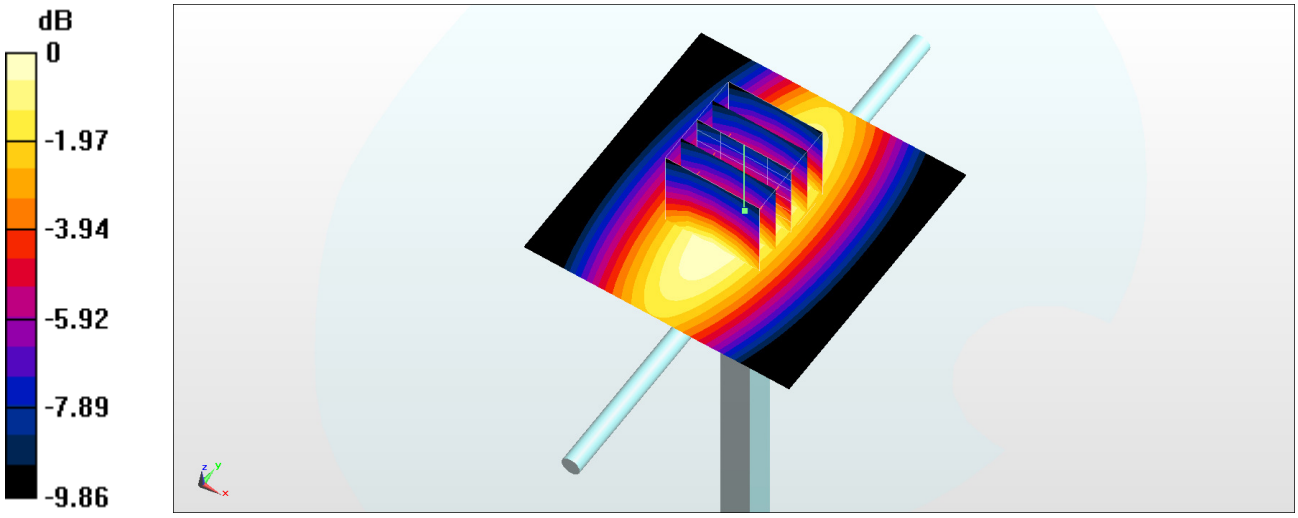

0 dB = 2.43 W/kg = 3.86 dBW/kg

Test Laboratory: Sporton International Inc. SAR/HAC Testing Lab Date: 2018/1/10

System Check_Body_750MHz

DUT: D750V3-1012

Communication System: CW; Frequency: 750 MHz;Duty Cycle: 1:1
Medium: MSL_750_180110 Medium parameters used: f = 750 MHz; σ = 0.965 S/m; ε_r = 56.454; ρ = 1000 kg/m^3
Ambient Temperature：23.5 ℃; Liquid Temperature：22.5 ℃

DASY5 Configuration:
- Probe: ES3DV3 - SN3270; ConvF(6.31, 6.31, 6.31); Calibrated: 2017/9/25;
- Sensor-Surface: 3mm (Mechanical Surface Detection)
- Electronics: DAE4 Sn854; Calibrated: 2017/5/2
- Phantom: SAM-Right; Type: SAM; Serial: TP-1503
- Measurement SW: DASY52, Version 52.8 (8);SEMCAD X Version 14.6.10 (7373)

Pin=250mW/Area Scan (61x61x1): Interpolated grid: dx=1.500 mm, dy=1.500 mm
Maximum value of SAR (interpolated) = 2.55 W/kg

Pin=250mW/Zoom Scan (5x5x7)/Cube 0: Measurement grid: dx=8mm, dy=8mm, dz=5mm
Reference Value = 52.74 V/m; Power Drift = -0.05 dB
Peak SAR (extrapolated) = 3.18 W/kg
SAR(1 g) = 2.2 W/kg; SAR(10 g) = 1.48 W/kg
Maximum value of SAR (measured) = 2.56 W/kg

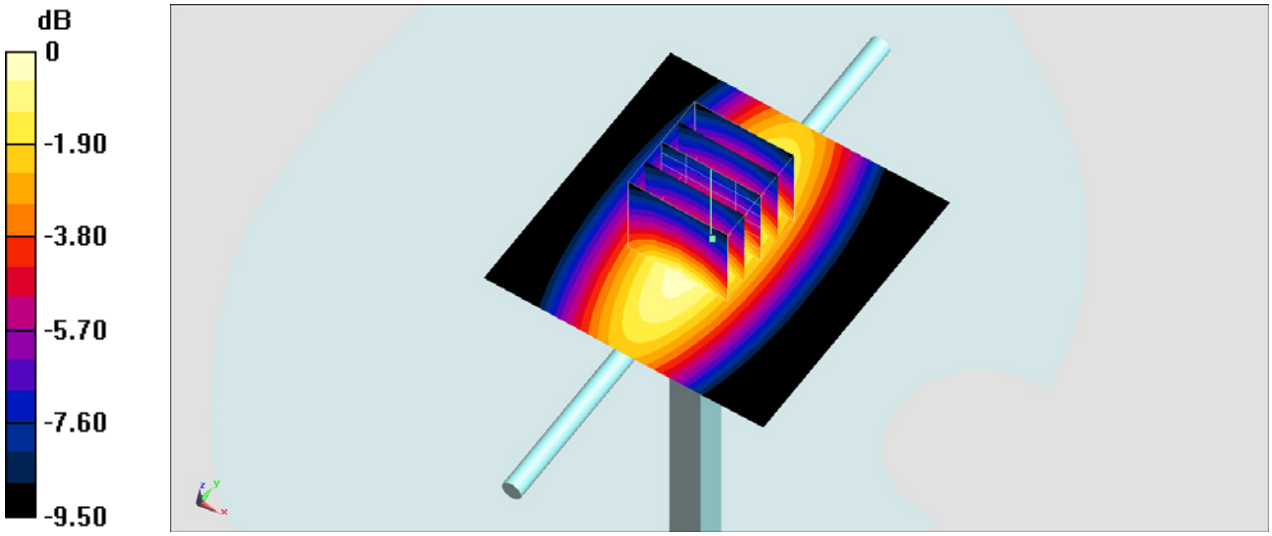

0 dB = 2.56 W/kg = 4.08 dBW/kg

System Check_Body_750MHz

DUT: D750V3-1012

Communication System: CW ; Frequency: 750 MHz;Duty Cycle: 1:1
Medium: MSL_750_180129 Medium parameters used: f = 750 MHz; σ = 0.972 S/m; ε_r = 53.878; ρ = 1000 kg/m^3
Ambient Temperature：23.5 ℃; Liquid Temperature：22.5 ℃

DASY5 Configuration
- Probe: EX3DV4 - SN3931; ConvF(10.34, 10.34, 10.34); Calibrated: 2017/9/29;
- Sensor-Surface: 1.4mm (Mechanical Surface Detection)
- Electronics: DAE4 Sn1399; Calibrated: 2017/11/16
- Phantom: SAM_Right; Type: QD000P40CD; Serial: S/N:1796
- Measurement SW: DASY52, Version 52.8 (8); SEMCAD X Version 14.6.10 (7373)

Pin=250mW/Area Scan (61x61x1): Interpolated grid: dx=1.500 mm, dy=1.500 mm
Maximum value of SAR (interpolated) = 2.99 W/kg

Pin=250mW/Zoom Scan (5x5x7)/Cube 0: Measurement grid: dx=8mm, dy=8mm, dz=5mm
Reference Value = 56.35 V/m; Power Drift = -0.14 dB
Peak SAR (extrapolated) = 3.31 W/kg
SAR(1 g) = 2.28 W/kg; SAR(10 g) = 1.53 W/kg
Maximum value of SAR (measured) = 2.84 W/kg

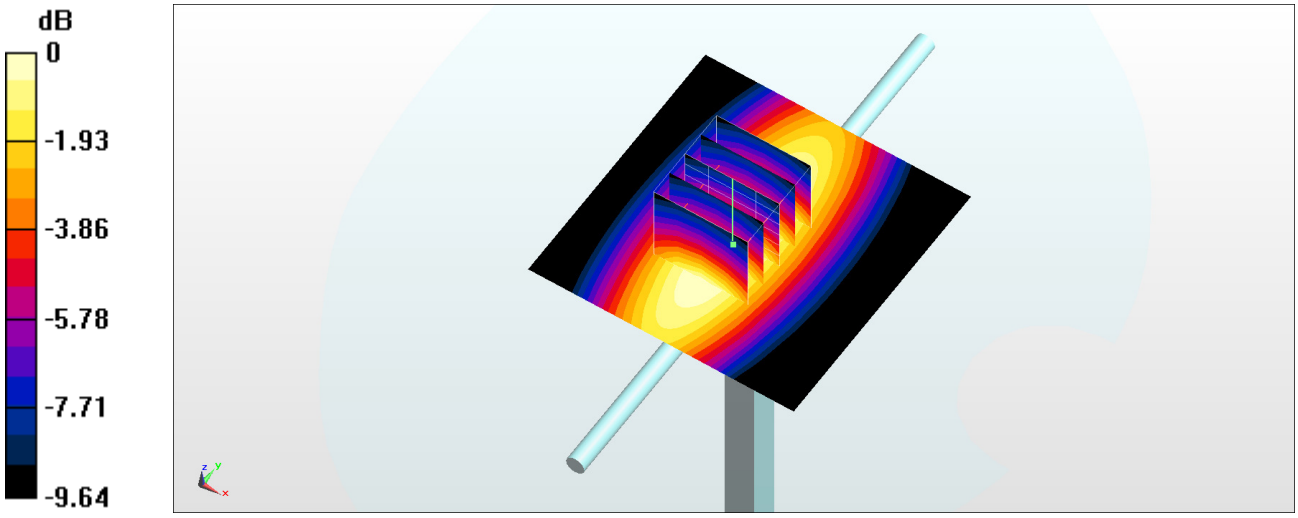

0 dB = 2.84 W/kg = 4.53 dBW/kg

Test Laboratory: Sporton International Inc. SAR/HAC Testing Lab Date: 2018/1/9

System Check_Head_835MHz

DUT: D835V2-499

Communication System: CW; Frequency: 835 MHz;Duty Cycle: 1:1
Medium: HSL_850_180109 Medium parameters used: f = 835 MHz; σ = 0.89 S/m; ε_r = 43.435; ρ = 1000 kg/m^3
Ambient Temperature：23.2 ℃; Liquid Temperature：22.2 ℃

DASY5 Configuration:
- Probe: ES3DV3 - SN3270; ConvF(6.18, 6.18, 6.18); Calibrated: 2017/9/25;
- Sensor-Surface: 3mm (Mechanical Surface Detection)
- Electronics: DAE4 Sn854; Calibrated: 2017/5/2
- Phantom: SAM-Right; Type: SAM; Serial: TP-1503
- Measurement SW: DASY52, Version 52.8 (8);SEMCAD X Version 14.6.10 (7373)

Pin=250mW/Area Scan (61x61x1): Interpolated grid: dx=1.500 mm, dy=1.500 mm
Maximum value of SAR (interpolated) = 2.85 W/kg

Pin=250mW/Zoom Scan (5x5x7)/Cube 0: Measurement grid: dx=8mm, dy=8mm, dz=5mm
Reference Value = 56.79 V/m; Power Drift = -0.11 dB
Peak SAR (extrapolated) = 3.47 W/kg
SAR(1 g) = 2.35 W/kg; SAR(10 g) = 1.55 W/kg
Maximum value of SAR (measured) = 2.73 W/kg

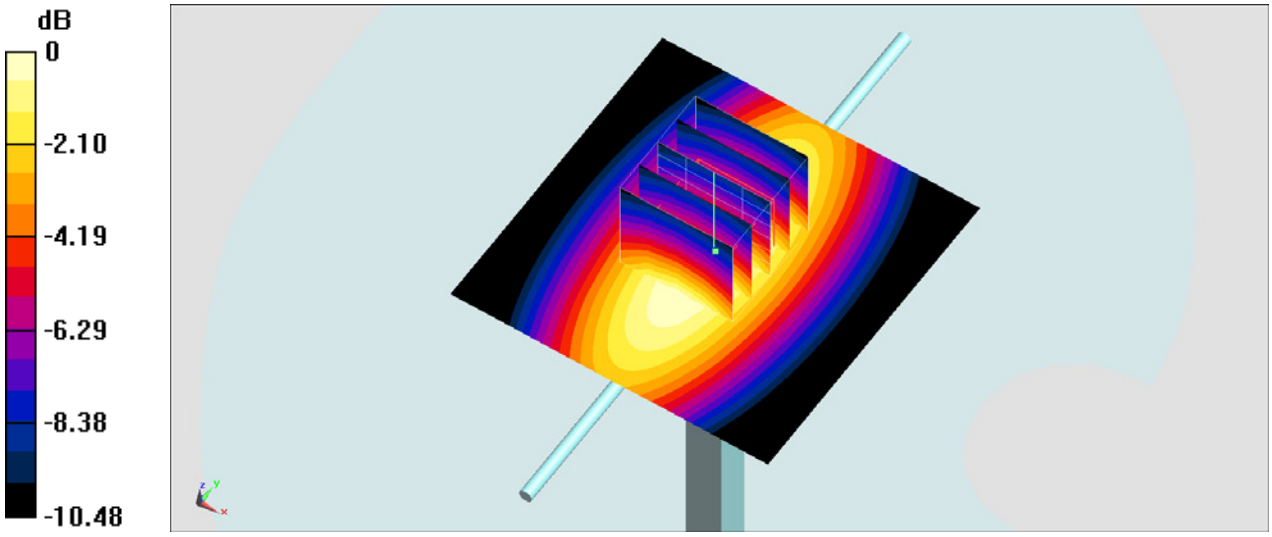

0 dB = 2.73 W/kg = 4.36 dBW/kg

System Check_Body_835MHz

DUT: D835V2-499

Communication System: CW ; Frequency: 835 MHz;Duty Cycle: 1:1
Medium: MSL_850_180123 Medium parameters used: f = 835 MHz; σ = 0.964 S/m; ε_r = 55.74; ρ = 1000 kg/m^3
Ambient Temperature：23.1 ℃; Liquid Temperature：22.1 ℃

DASY5 Configuration
- Probe: EX3DV4 - SN3931; ConvF(10.09, 10.09, 10.09); Calibrated: 2017/9/29;
- Sensor-Surface: 1.4mm (Mechanical Surface Detection)
- Electronics: DAE4 Sn1399; Calibrated: 2017/11/16
- Phantom: SAM_Right; Type: QD000P40CD; Serial: S/N:1796
- Measurement SW: DASY52, Version 52.8 (8); SEMCAD X Version 14.6.10 (7373)

Pin=250mW/Area Scan (61x61x1): Interpolated grid: dx=1.500 mm, dy=1.500 mm
Maximum value of SAR (interpolated) = 3.37 W/kg

Pin=250mW/Zoom Scan (5x5x7)/Cube 0: Measurement grid: dx=8mm, dy=8mm, dz=5mm
Reference Value = 61.29 V/m; Power Drift = -0.02 dB
Peak SAR (extrapolated) = 3.82 W/kg
SAR(1 g) = 2.52 W/kg; SAR(10 g) = 1.66 W/kg
Maximum value of SAR (measured) = 3.36 W/kg

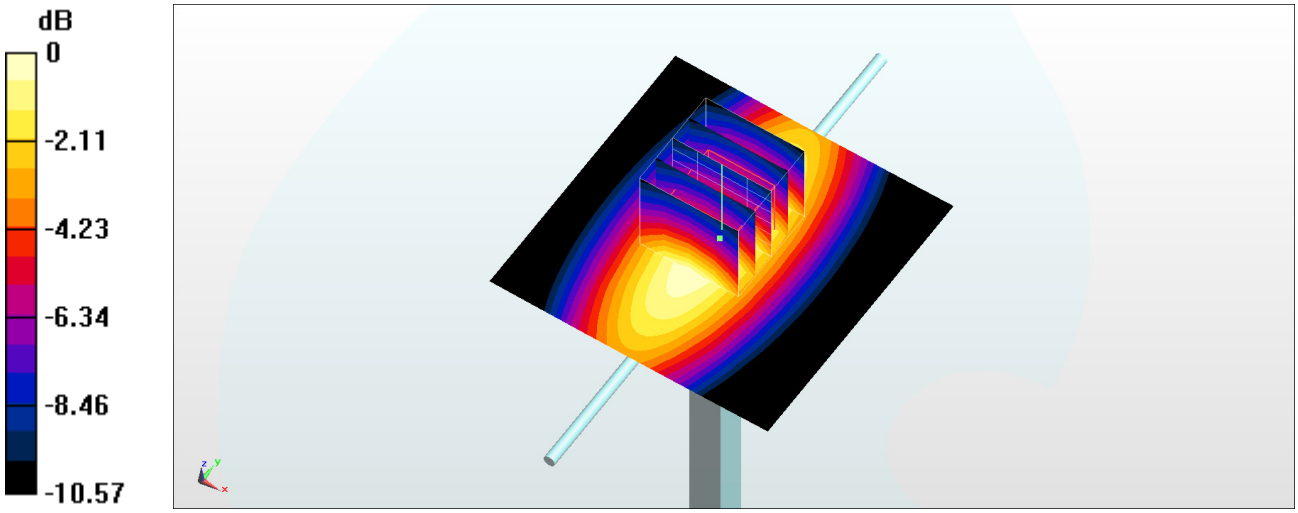

0 dB = 3.36 W/kg = 5.26 dBW/kg

System Check_Body_835MHz

DUT: D835V2-499

Communication System: CW; Frequency: 835 MHz;Duty Cycle: 1:1
Medium: MSL_850_180129 Medium parameters used: f = 835 MHz; σ = 0.962 S/m; ε_r = 56.765; ρ = 1000 kg/m^3
Ambient Temperature：23.6 ℃; Liquid Temperature：22.6 ℃

DASY5 Configuration
- Probe: EX3DV4 - SN3931; ConvF(10.09, 10.09, 10.09); Calibrated: 2017/9/29;
- Sensor-Surface: 1.4mm (Mechanical Surface Detection)
- Electronics: DAE4 Sn1399; Calibrated: 2017/11/16
- Phantom: SAM_Right; Type: QD000P40CD; Serial: S/N:1796
- Measurement SW: DASY52, Version 52.8 (8); SEMCAD X Version 14.6.10 (7373)

Pin=250mW/Area Scan (61x61x1): Interpolated grid: dx=1.500 mm, dy=1.500 mm
Maximum value of SAR (interpolated) = 3.33 W/kg

Pin=250mW/Zoom Scan (5x5x7)/Cube 0: Measurement grid: dx=8mm, dy=8mm, dz=5mm
Reference Value = 60.55 V/m; Power Drift = -0.08 dB
Peak SAR (extrapolated) = 3.74 W/kg
SAR(1 g) = 2.49 W/kg; SAR(10 g) = 1.65 W/kg
Maximum value of SAR (measured) = 3.31 W/kg

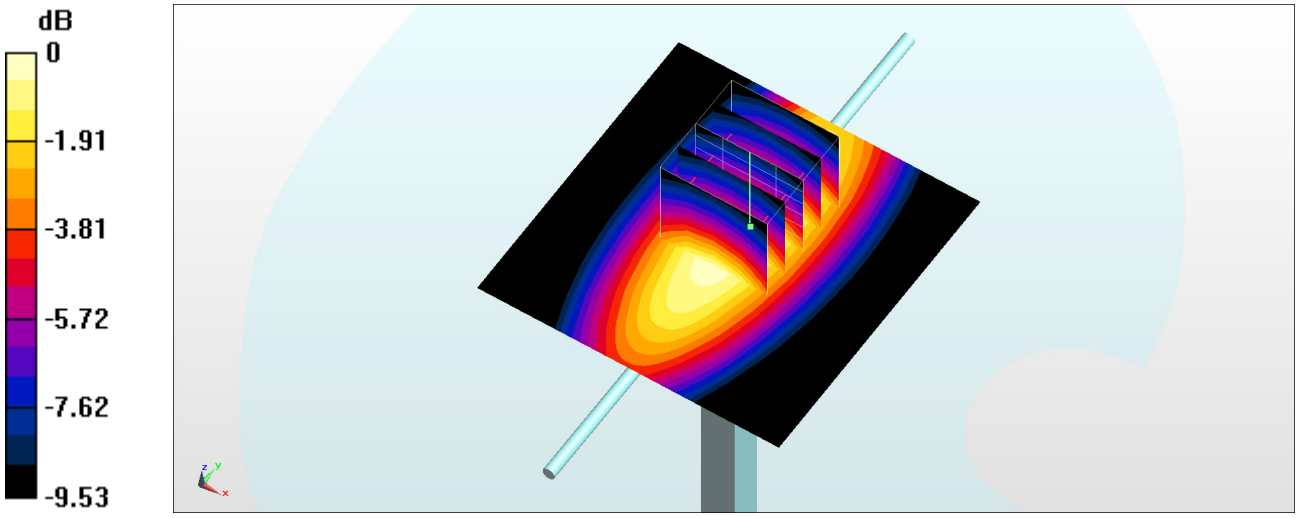

0 dB = 3.31 W/kg = 5.20 dBW/kg

Test Laboratory: Sporton International Inc. SAR/HAC Testing Lab Date: 2018/1/9

System Check_Head_1750MHz

DUT: D1750V2-1068

Communication System: CW; Frequency: 1750 MHz;Duty Cycle: 1:1
Medium: HSL_1750_180109 Medium parameters used: f = 1750 MHz; σ = 1.417 S/m; ε_r = 41.808; ρ = 1000 kg/m^3
Ambient Temperature：23.2 ℃; Liquid Temperature：22.2 ℃

DASY5 Configuration:
- Probe: ES3DV3 - SN3270; ConvF(5.24, 5.24, 5.24); Calibrated: 2017/9/25;
- Sensor-Surface: 3mm (Mechanical Surface Detection)
- Electronics: DAE4 Sn854; Calibrated: 2017/5/2
- Phantom: SAM_Left; Type: QD000P40CD; Serial: TP:1431
- Measurement SW: DASY52, Version 52.8 (8);SEMCAD X Version 14.6.10 (7373)

Pin=250mW/Area Scan (61x61x1): Interpolated grid: dx=1.500 mm, dy=1.500 mm
Maximum value of SAR (interpolated) = 11.9 W/kg

Pin=250mW/Zoom Scan (5x5x7)/Cube 0: Measurement grid: dx=8mm, dy=8mm, dz=5mm
Reference Value = 93.03 V/m; Power Drift = 0.05 dB
Peak SAR (extrapolated) = 16.4 W/kg
SAR(1 g) = 9.41 W/kg; SAR(10 g) = 5.13 W/kg
Maximum value of SAR (measured) = 11.5 W/kg

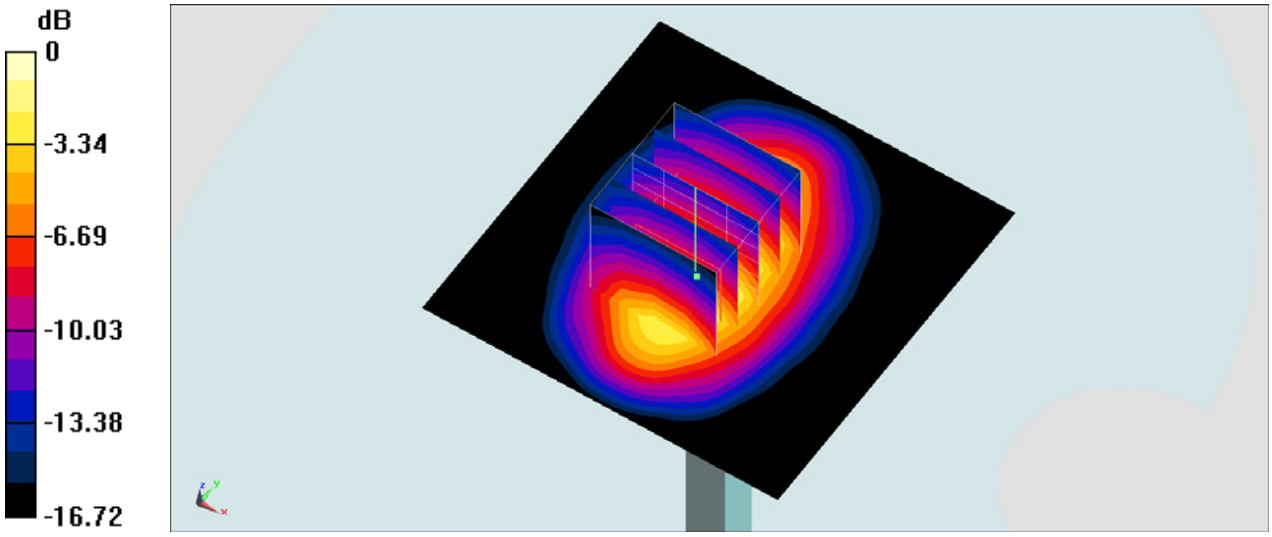

0 dB = 11.5 W/kg = 10.61 dBW/kg

System Check_Body_1750MHz

DUT: D1750V2-1068

Communication System: CW; Frequency: 1750 MHz;Duty Cycle: 1:1
Medium: MSL_1750_180131 Medium parameters used: f = 1750 MHz; σ = 1.461 S/m; ε_r = 55.079; ρ = 1000 kg/m^3
Ambient Temperature：23.4 ℃; Liquid Temperature：22.4 ℃

DASY5 Configuration
- Probe: EX3DV4 - SN3931; ConvF(8.43, 8.43, 8.43); Calibrated: 2017/9/29;
- Sensor-Surface: 1.4mm (Mechanical Surface Detection)
- Electronics: DAE4 Sn1399; Calibrated: 2017/11/16
- Phantom: SAM_Left; Type: QD000P40CD; Serial: S/N:1801
- Measurement SW: DASY52, Version 52.8 (8); SEMCAD X Version 14.6.10 (7373)

Pin=250mW/Area Scan (61x61x1): Interpolated grid: dx=1.500 mm, dy=1.500 mm
Maximum value of SAR (interpolated) = 13.8 W/kg

Pin=250mW/Zoom Scan (5x5x7)/Cube 0: Measurement grid: dx=8mm, dy=8mm, dz=5mm
Reference Value = 100.1 V/m; Power Drift = 0.06 dB
Peak SAR (extrapolated) = 16.3 W/kg
SAR(1 g) = 9.4 W/kg; SAR(10 g) = 5.1 W/kg
Maximum value of SAR (measured) = 14.1 W/kg

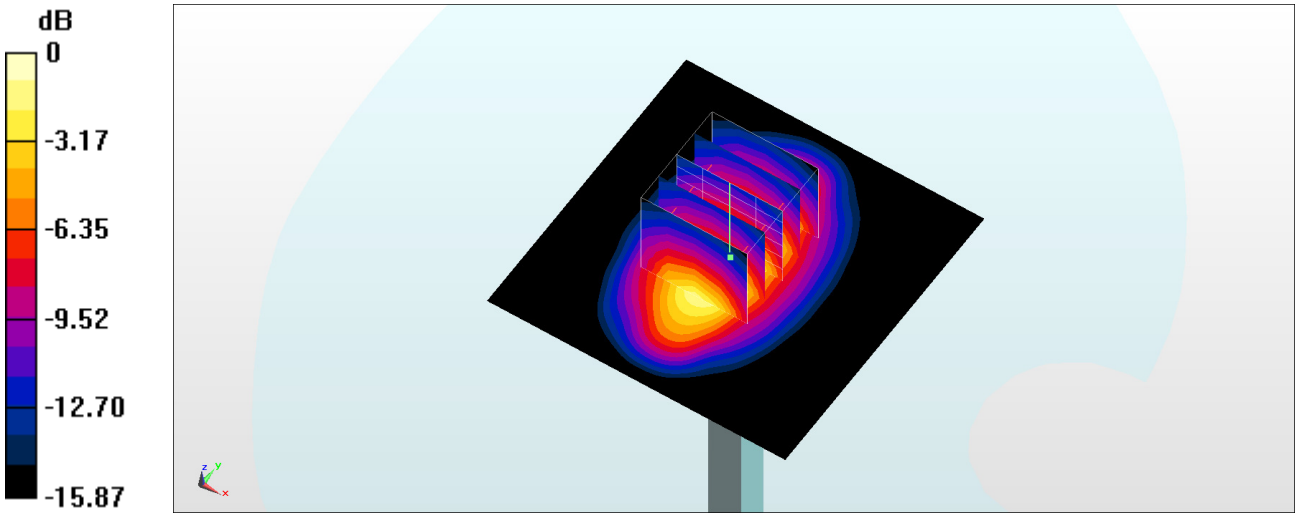

0 dB = 14.1 W/kg = 11.49 dBW/kg

Test Laboratory: Sporton International Inc. SAR/HAC Testing Lab Date: 2018/1/9

System Check_Head_1900MHz

DUT: D1900V2-5d041

Communication System: CW; Frequency: 1900 MHz;Duty Cycle: 1:1
Medium: HSL_1900_180109 Medium parameters used: f = 1900 MHz; σ = 1.404 S/m; ε_r = 38.98; ρ = 1000 kg/m^3
Ambient Temperature：23.2 ℃; Liquid Temperature：22.2 ℃

DASY5 Configuration:
- Probe: ES3DV3 - SN3270; ConvF(5.2, 5.2, 5.2); Calibrated: 2017/9/25;
- Sensor-Surface: 3mm (Mechanical Surface Detection)
- Electronics: DAE4 Sn854; Calibrated: 2017/5/2
- Phantom: SAM_Left; Type: QD000P40CD; Serial: TP:1431
- Measurement SW: DASY52, Version 52.8 (8);SEMCAD X Version 14.6.10 (7373)

Pin=250mW/Area Scan (61x61x1): Interpolated grid: dx=1.500 mm, dy=1.500 mm
Maximum value of SAR (interpolated) = 12.4 W/kg

Pin=250mW/Zoom Scan (5x5x7)/Cube 0: Measurement grid: dx=8mm, dy=8mm, dz=5mm
Reference Value = 95.40 V/m; Power Drift = 0.04 dB
Peak SAR (extrapolated) = 17.6 W/kg
SAR(1 g) = 9.68 W/kg; SAR(10 g) = 5.06 W/kg
Maximum value of SAR (measured) = 11.9 W/kg

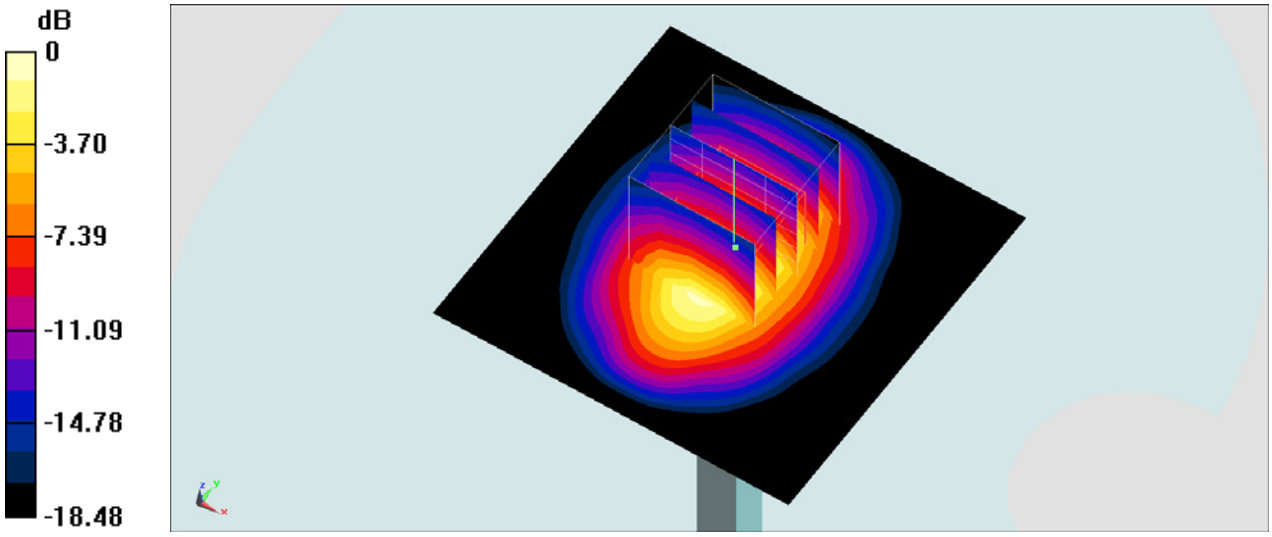

0 dB = 11.9 W/kg = 10.76 dBW/kg

System Check_Body_1900MHz

DUT: D1900V2-5d041

Communication System: CW; Frequency: 1900 MHz;Duty Cycle: 1:1
Medium: MSL_1900_180128 Medium parameters used: f = 1900 MHz; σ = 1.55 S/m; ε_r = 51.6; ρ = 1000 kg/m^3
Ambient Temperature：23.4 ℃; Liquid Temperature：22.4 ℃

DASY5 Configuration
- Probe: EX3DV4 - SN3931; ConvF(8.12, 8.12, 8.12); Calibrated: 2017/9/29;
- Sensor-Surface: 1.4mm (Mechanical Surface Detection)
- Electronics: DAE4 Sn1399; Calibrated: 2017/11/16
- Phantom: SAM_Left; Type: QD000P40CD; Serial: S/N:1801
- Measurement SW: DASY52, Version 52.8 (8); SEMCAD X Version 14.6.10 (7373)

Pin=250mW/Area Scan (61x61x1): Interpolated grid: dx=1.500 mm, dy=1.500 mm
Maximum value of SAR (interpolated) = 15.8 W/kg

Pin=250mW/Zoom Scan (5x5x7)/Cube 0: Measurement grid: dx=8mm, dy=8mm, dz=5mm
Reference Value = 102.4 V/m; Power Drift = -0.06 dB
Peak SAR (extrapolated) = 18.3 W/kg
SAR(1 g) = 10.5 W/kg; SAR(10 g) = 5.5 W/kg
Maximum value of SAR (measured) = 15.7 W/kg

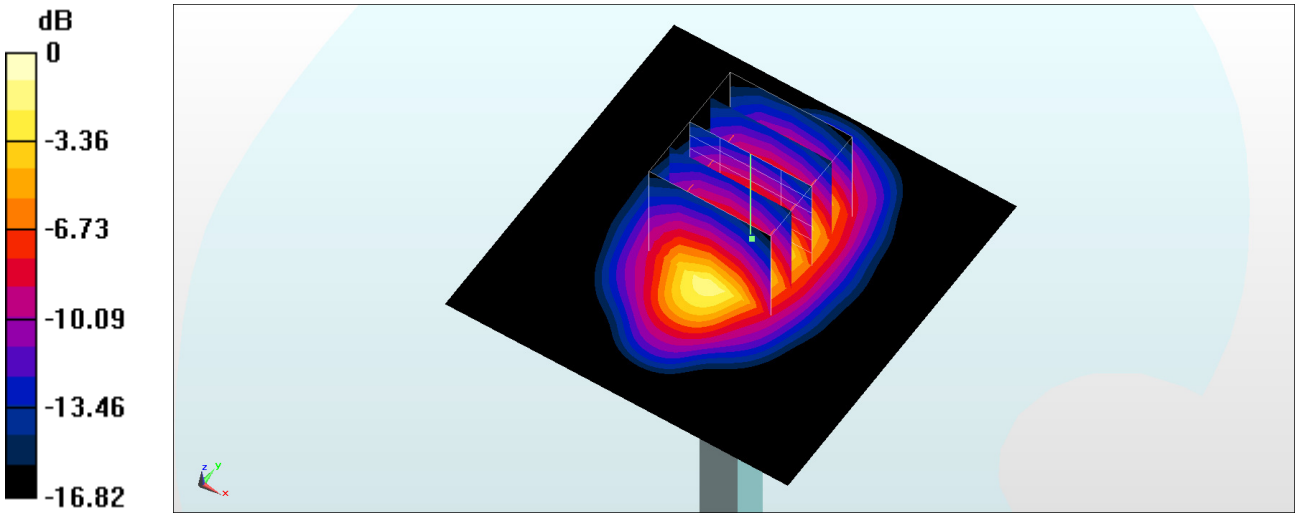

0 dB = 15.7 W/kg = 11.96 dBW/kg

System Check_Head_2300MHz

DUT: D2300V2-1023

Communication System: CW ; Frequency: 2300 MHz;Duty Cycle: 1:1
Medium: HSL_2300_180201 Medium parameters used: f = 2300 MHz; σ = 1.659 S/m; ε_r = 39.613; ρ = 1000 kg/m^3
Ambient Temperature：23.4 ℃; Liquid Temperature：22.4 ℃

DASY5 Configuration
- Probe: EX3DV4 - SN3931; ConvF(7.94, 7.94, 7.94); Calibrated: 2017/9/29;
- Sensor-Surface: 1.4mm (Mechanical Surface Detection)
- Electronics: DAE4 Sn1399; Calibrated: 2017/11/16
- Phantom: SAM_Left; Type: QD000P40CD; Serial: S/N:1801
- Measurement SW: DASY52, Version 52.8 (8); SEMCAD X Version 14.6.10 (7373)

Pin=250mW/Area Scan (71x71x1): Interpolated grid: dx=1.200 mm, dy=1.200 mm
Maximum value of SAR (interpolated) = 20.1 W/kg

Pin=250mW/Zoom Scan (7x7x7)/Cube 0: Measurement grid: dx=5mm, dy=5mm, dz=5mm
Reference Value = 111.5 V/m; Power Drift = -0.12 dB
Peak SAR (extrapolated) = 24.5 W/kg
SAR(1 g) = 12.4 W/kg; SAR(10 g) = 6.03 W/kg
Maximum value of SAR (measured) = 20.0 W/kg

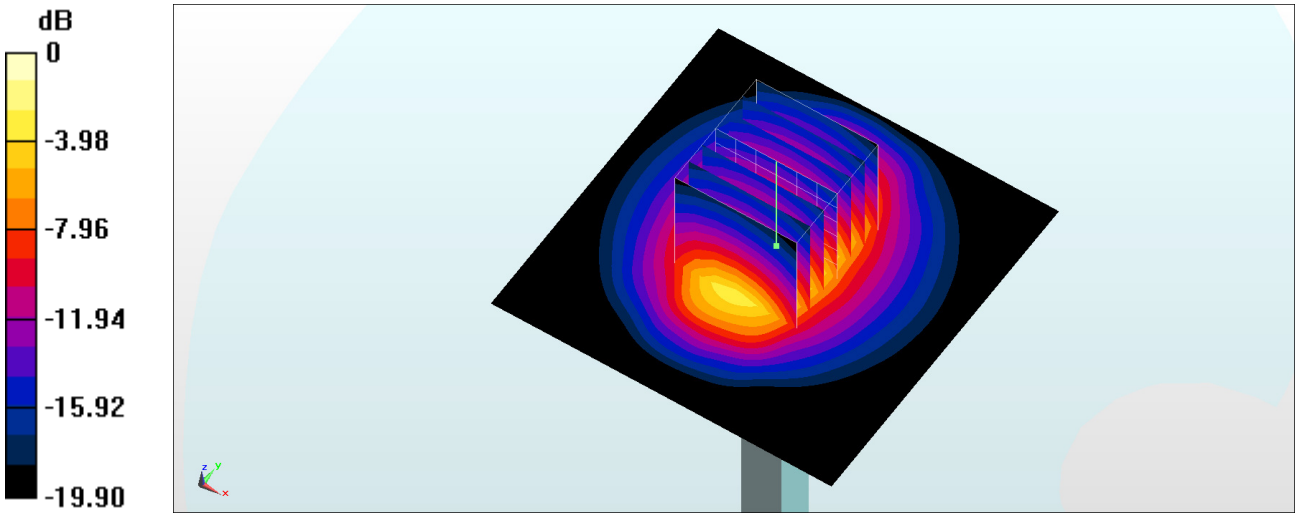

0 dB = 20.0 W/kg = 13.01 dBW/kg

System Check_Body_2300MHz

DUT: D2300V2-1023

Communication System: CW ; Frequency: 2300 MHz;Duty Cycle: 1:1
Medium: MSL_2300_180201 Medium parameters used: f = 2300 MHz; σ = 1.742 S/m; ε_r = 55.257; ρ = 1000 kg/m^3
Ambient Temperature：23.4 ℃; Liquid Temperature：22.4 ℃

DASY5 Configuration
- Probe: EX3DV4 - SN3931; ConvF(7.89, 7.89, 7.89); Calibrated: 2017/9/29;
- Sensor-Surface: 1.4mm (Mechanical Surface Detection)
- Electronics: DAE4 Sn1399; Calibrated: 2017/11/16
- Phantom: SAM_Right; Type: QD000P40CD; Serial: S/N:1796
- Measurement SW: DASY52, Version 52.8 (8); SEMCAD X Version 14.6.10 (7373)

Pin=250mW/Area Scan (71x71x1): Interpolated grid: dx=1.200 mm, dy=1.200 mm
Maximum value of SAR (interpolated) = 18.7 W/kg

Pin=250mW/Zoom Scan (7x7x7)/Cube 0: Measurement grid: dx=5mm, dy=5mm, dz=5mm
Reference Value = 108.9 V/m; Power Drift = -0.04 dB
Peak SAR (extrapolated) = 22.2 W/kg
SAR(1 g) = 11.7 W/kg; SAR(10 g) = 5.68 W/kg
Maximum value of SAR (measured) = 18.7 W/kg

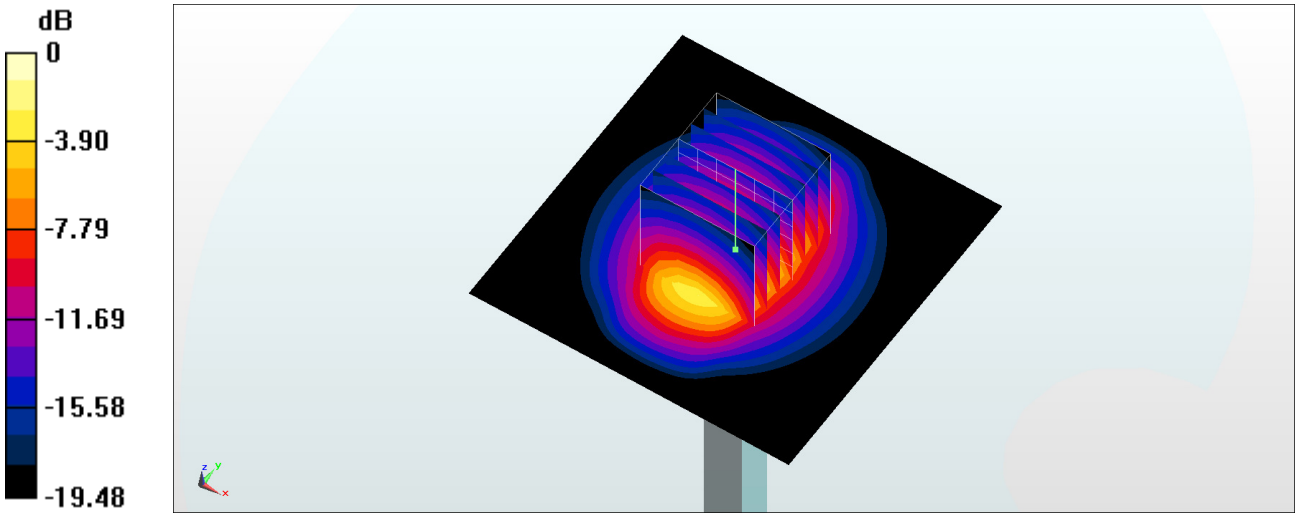

0 dB = 18.7 W/kg = 12.72 dBW/kg