System Check_Head_835MHz

DUT: D835V2-499

Communication System: CW; Frequency: 835 MHz;Duty Cycle: 1:1
Medium: HSL_850_180317 Medium parameters used: f = 835 MHz; σ = 0.896 S/m; ε_r = 43.317; ρ = 1000 kg/m^3
Ambient Temperature：23.4 ℃; Liquid Temperature：22.4 ℃

DASY5 Configuration:
- Probe: ES3DV3 - SN3169; ConvF(5.99, 5.99, 5.99); Calibrated: 2017/5/11;
- Sensor-Surface: 3mm (Mechanical Surface Detection)
- Electronics: DAE4 Sn853; Calibrated: 2017/7/19
- Phantom: SAM_Left; Type: QD000P40CD; Serial: TP:1815
- Measurement SW: DASY52, Version 52.8 (8);SEMCAD X Version 14.6.10 (7373)

Pin=250mW/Area Scan (61x61x1): Interpolated grid: dx=1.500 mm, dy=1.500 mm
Maximum value of SAR (interpolated) = 2.92 W/kg

Pin=250mW/Zoom Scan (5x5x7)/Cube 0: Measurement grid: dx=8mm, dy=8mm, dz=5mm
Reference Value = 57.40 V/m; Power Drift = 0.08 dB
Peak SAR (extrapolated) = 3.73 W/kg
SAR(1 g) = 2.51 W/kg; SAR(10 g) = 1.65 W/kg
Maximum value of SAR (measured) = 2.91 W/kg

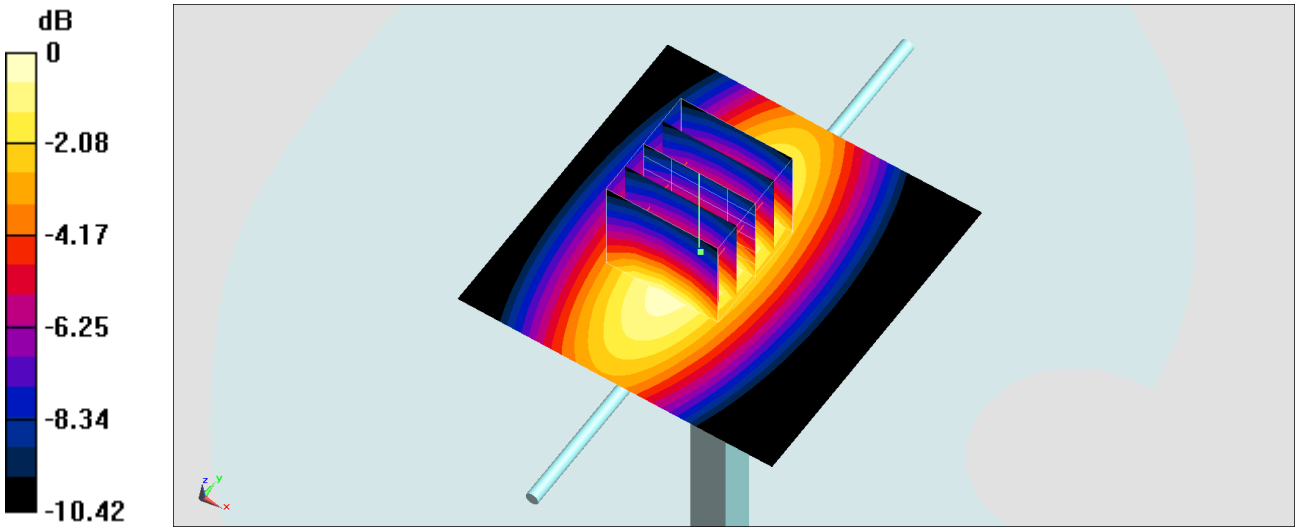

0 dB = 2.91 W/kg = 4.64 dBW/kg

System Check_Head_835MHz

DUT: D835V2-499

Communication System: CW; Frequency: 835 MHz;Duty Cycle: 1:1
Medium: HSL_850_180320 Medium parameters used: f = 835 MHz; σ = 0.924 S/m; ε_r = 43.214; ρ = 1000 kg/m^3
Ambient Temperature：23.4 ℃; Liquid Temperature：22.4 ℃

DASY5 Configuration:
- Probe: ES3DV3 - SN3169; ConvF(5.99, 5.99, 5.99); Calibrated: 2017/5/11;
- Sensor-Surface: 3mm (Mechanical Surface Detection)
- Electronics: DAE4 Sn853; Calibrated: 2017/7/19
- Phantom: SAM_Right; Type: QD000P40CD; Serial: 1719
- Measurement SW: DASY52, Version 52.8 (8);SEMCAD X Version 14.6.10 (7373)

Pin=250mW/Area Scan (61x61x1): Interpolated grid: dx=1.500 mm, dy=1.500 mm
Maximum value of SAR (interpolated) = 2.95 W/kg

Pin=250mW/Zoom Scan (5x5x7)/Cube 0: Measurement grid: dx=8mm, dy=8mm, dz=5mm
Reference Value = 56.83 V/m; Power Drift = 0.03 dB
Peak SAR (extrapolated) = 3.73 W/kg
SAR(1 g) = 2.5 W/kg; SAR(10 g) = 1.64 W/kg
Maximum value of SAR (measured) = 2.92 W/kg

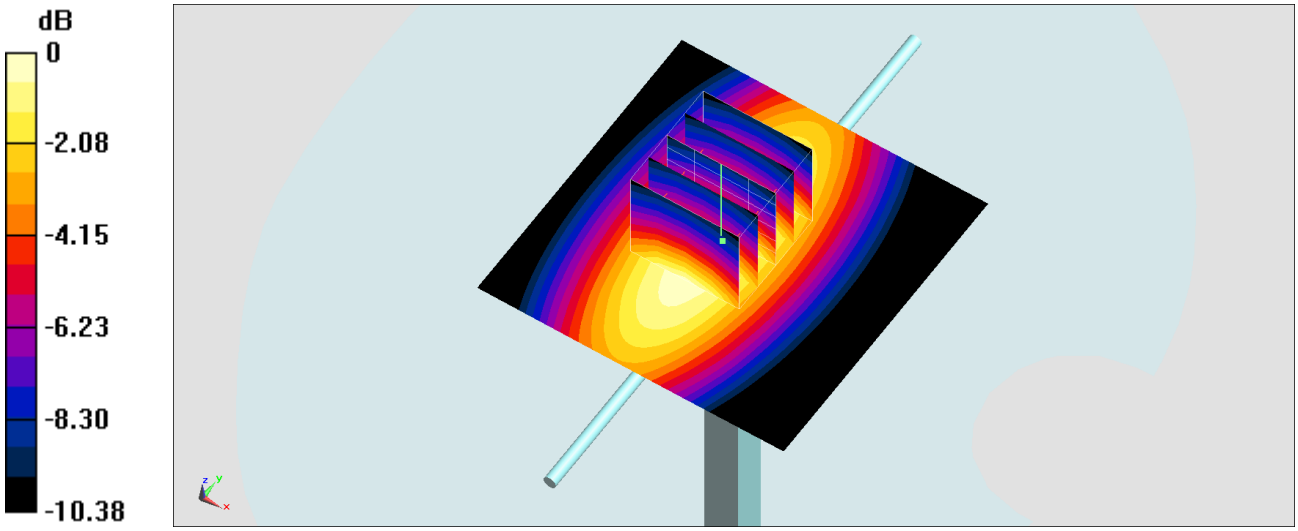

0 dB = 2.92 W/kg = 4.65 dBW/kg

System Check_Head_835MHz

DUT: D835V2-4d092

Communication System: CW; Frequency: 835 MHz;Duty Cycle: 1:1
Medium: HSL_850_180327 Medium parameters used: f = 835 MHz; σ = 0.88 S/m; ε_r = 42.149; ρ = 1000 kg/m^3
Ambient Temperature：23.7 ℃; Liquid Temperature：22.7 ℃

DASY5 Configuration:
- Probe: ES3DV3 - SN3169; ConvF(5.99, 5.99, 5.99); Calibrated: 2017/5/11;
- Sensor-Surface: 3mm (Mechanical Surface Detection)
- Electronics: DAE4 Sn853; Calibrated: 2017/7/19
- Phantom: SAM_Left; Type: QD000P40CD; Serial: TP:1815
- Measurement SW: DASY52, Version 52.8 (8);SEMCAD X Version 14.6.10 (7373)

Pin=250mW/Area Scan (61x61x1): Interpolated grid: dx=1.500 mm, dy=1.500 mm
Maximum value of SAR (interpolated) = 2.86 W/kg

Pin=250mW/Zoom Scan (5x5x7)/Cube 0: Measurement grid: dx=8mm, dy=8mm, dz=5mm
Reference Value = 57.40 V/m; Power Drift = 0.06 dB
Peak SAR (extrapolated) = 3.67 W/kg
SAR(1 g) = 2.46 W/kg; SAR(10 g) = 1.62 W/kg
Maximum value of SAR (measured) = 2.86 W/kg

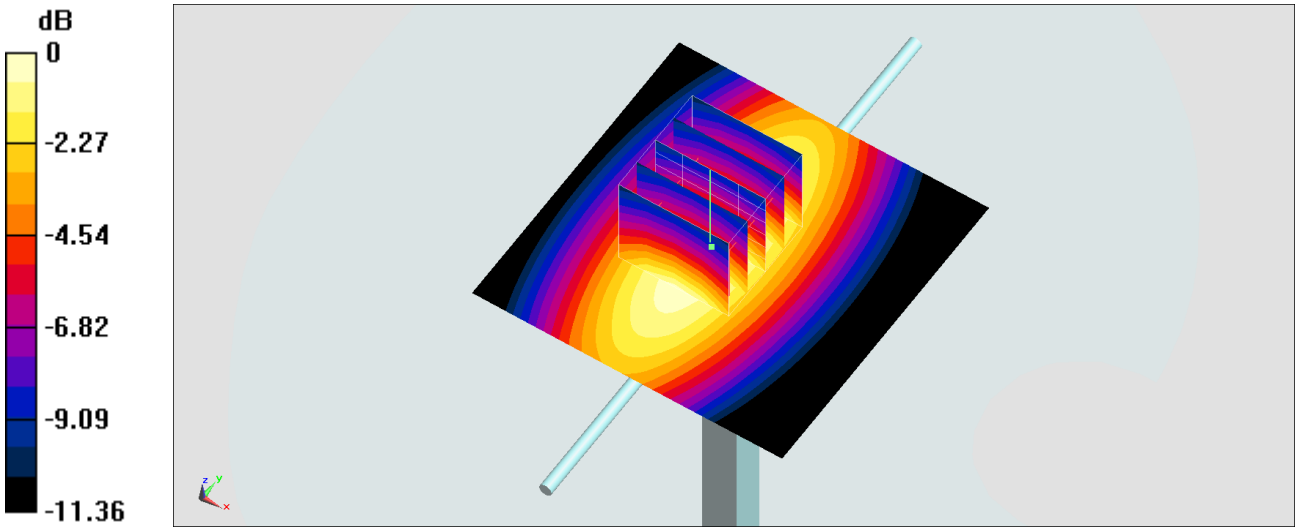

0 dB = 2.86 W/kg = 4.56 dBW/kg

System Check_Body_835MHz

DUT: D835V2-499

Communication System: CW; Frequency: 835 MHz;Duty Cycle: 1:1
Medium: MSL_850_180315 Medium parameters used: f = 835 MHz; σ = 0.976 S/m; ε_r = 56.33; ρ = 1000 kg/m^3
Ambient Temperature：23.6 ℃; Liquid Temperature：22.6 ℃

DASY5 Configuration:
- Probe: ES3DV3 - SN3169; ConvF(6.05, 6.05, 6.05); Calibrated: 2017/5/11;
- Sensor-Surface: 3mm (Mechanical Surface Detection)
- Electronics: DAE4 Sn853; Calibrated: 2017/7/19
- Phantom: SAM_Right; Type: QD000P40CD; Serial: 1719
- Measurement SW: DASY52, Version 52.8 (8);SEMCAD X Version 14.6.10 (7373)

Pin=250mW/Area Scan (61x61x1): Interpolated grid: dx=1.500 mm, dy=1.500 mm
Maximum value of SAR (interpolated) = 2.91 W/kg

Pin=250mW/Zoom Scan (5x5x7)/Cube 0: Measurement grid: dx=8mm, dy=8mm, dz=5mm
Reference Value = 56.81 V/m; Power Drift = -0.05 dB
Peak SAR (extrapolated) = 3.51 W/kg
SAR(1 g) = 2.49 W/kg; SAR(10 g) = 1.67 W/kg
Maximum value of SAR (measured) = 2.89 W/kg

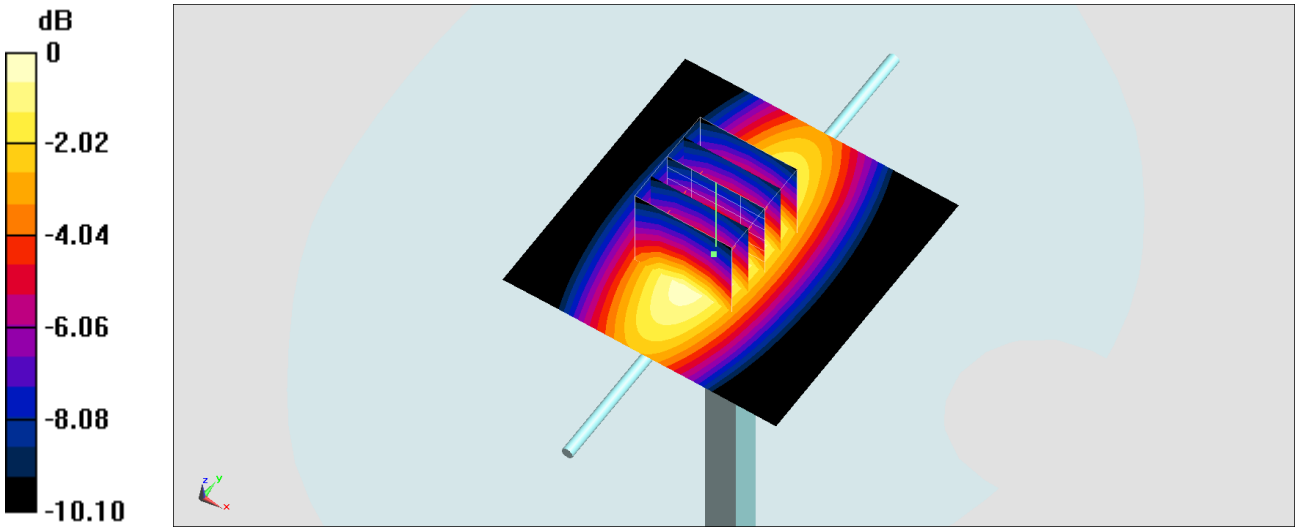

0 dB = 2.89 W/kg = 4.61 dBW/kg

System Check_Body_835MHz

DUT: D835V2-499

Communication System: CW; Frequency: 835 MHz;Duty Cycle: 1:1
Medium: MSL_850_180317 Medium parameters used: f = 835 MHz; σ = 0.943 S/m; ε_r = 56.671; ρ = 1000 kg/m^3
Ambient Temperature：23.4 ℃; Liquid Temperature：22.4 ℃

DASY5 Configuration:
- Probe: ES3DV3 - SN3169; ConvF(6.05, 6.05, 6.05); Calibrated: 2017/5/11;
- Sensor-Surface: 3mm (Mechanical Surface Detection)
- Electronics: DAE4 Sn853; Calibrated: 2017/7/19
- Phantom: SAM_Right; Type: QD000P40CD; Serial: 1719
- Measurement SW: DASY52, Version 52.8 (8);SEMCAD X Version 14.6.10 (7373)

Pin=250mW/Area Scan (61x61x1): Interpolated grid: dx=1.500 mm, dy=1.500 mm
Maximum value of SAR (interpolated) = 2.81 W/kg

Pin=250mW/Zoom Scan (5x5x7)/Cube 0: Measurement grid: dx=8mm, dy=8mm, dz=5mm
Reference Value = 56.81 V/m; Power Drift = -0.05 dB
Peak SAR (extrapolated) = 3.40 W/kg
SAR(1 g) = 2.41 W/kg; SAR(10 g) = 1.61 W/kg
Maximum value of SAR (measured) = 2.79 W/kg

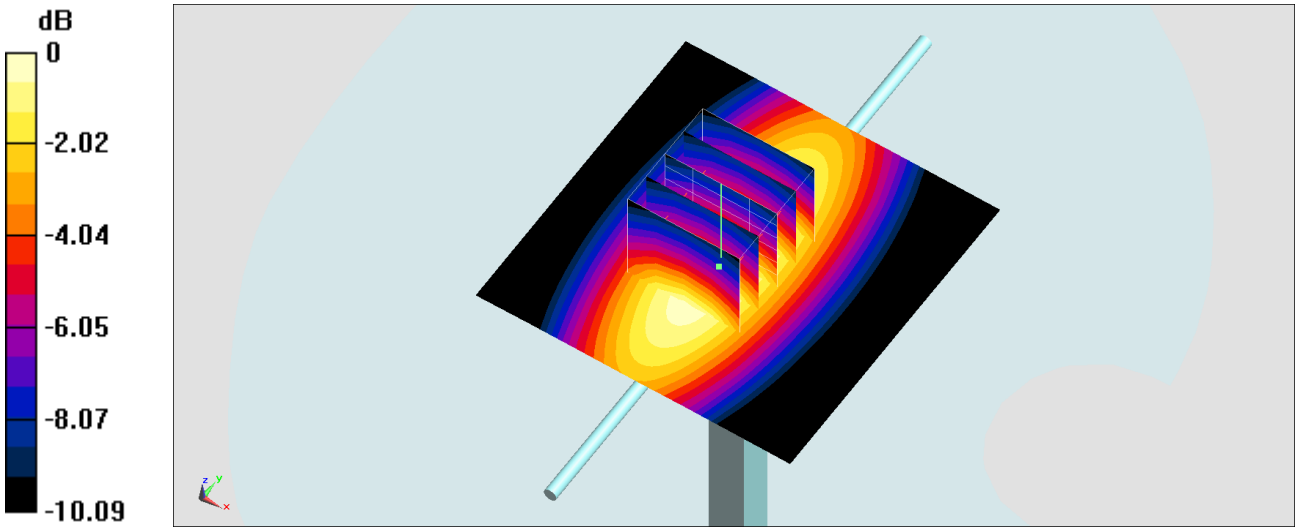

0 dB = 2.79 W/kg = 4.46 dBW/kg

System Check_Body_835MHz

DUT: D835V2-499

Communication System: CW; Frequency: 835 MHz;Duty Cycle: 1:1
Medium: MSL_850_180320 Medium parameters used: f = 835 MHz; σ = 0.975 S/m; ε_r = 56.301; ρ = 1000 kg/m^3
Ambient Temperature：23.6 ℃; Liquid Temperature：22.6 ℃

DASY5 Configuration:
- Probe: ES3DV3 - SN3169; ConvF(6.05, 6.05, 6.05); Calibrated: 2017/5/11;
- Sensor-Surface: 3mm (Mechanical Surface Detection)
- Electronics: DAE4 Sn853; Calibrated: 2017/7/19
- Phantom: SAM_Right; Type: QD000P40CD; Serial: 1719
- Measurement SW: DASY52, Version 52.8 (8);SEMCAD X Version 14.6.10 (7373)

Pin=250mW/Area Scan (61x61x1): Interpolated grid: dx=1.500 mm, dy=1.500 mm
Maximum value of SAR (interpolated) = 2.91 W/kg

Pin=250mW/Zoom Scan (5x5x7)/Cube 0: Measurement grid: dx=8mm, dy=8mm, dz=5mm
Reference Value = 56.81 V/m; Power Drift = -0.05 dB
Peak SAR (extrapolated) = 3.51 W/kg
SAR(1 g) = 2.49 W/kg; SAR(10 g) = 1.67 W/kg
Maximum value of SAR (measured) = 2.89 W/kg

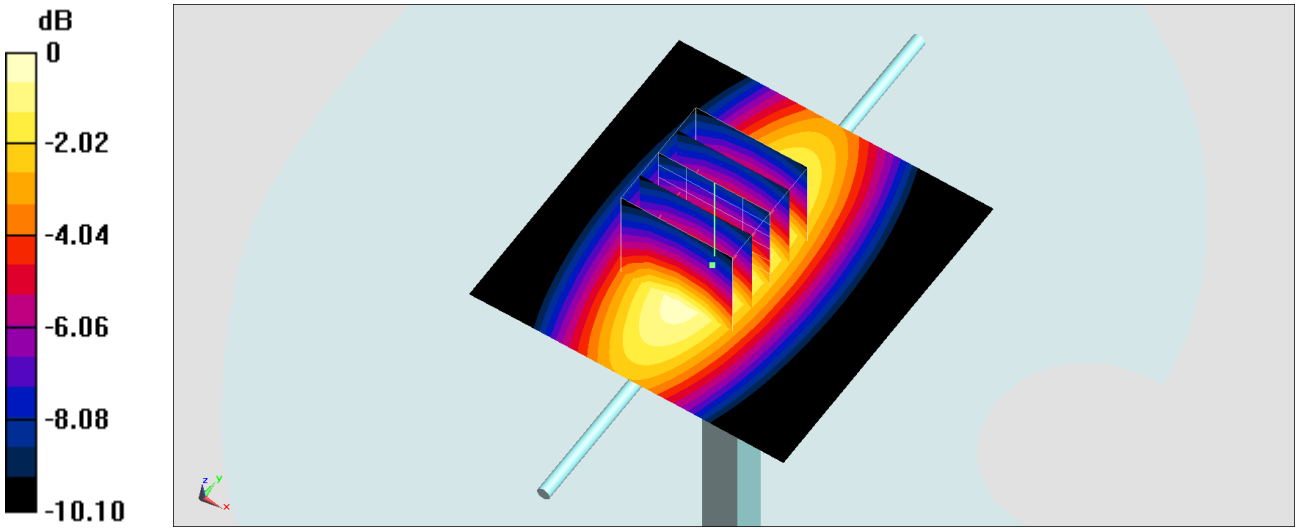

0 dB = 2.89 W/kg = 4.61 dBW/kg

System Check_Body_835MHz

DUT: D835V2-4d092

Communication System: CW; Frequency: 835 MHz;Duty Cycle: 1:1
Medium: MSL_850_180324 Medium parameters used: f = 835 MHz; σ = 1.001 S/m; ε_r = 56.907; ρ = 1000 kg/m^3
Ambient Temperature：23.2 ℃; Liquid Temperature：22.2 ℃

DASY5 Configuration:
- Probe: ES3DV3 - SN3169; ConvF(6.05, 6.05, 6.05); Calibrated: 2017/5/11;
- Sensor-Surface: 3mm (Mechanical Surface Detection)
- Electronics: DAE4 Sn853; Calibrated: 2017/7/19
- Phantom: SAM_Right; Type: QD000P40CD; Serial: 1719
- Measurement SW: DASY52, Version 52.8 (8);SEMCAD X Version 14.6.10 (7373)

Pin=250mW/Area Scan (61x61x1): Interpolated grid: dx=1.500 mm, dy=1.500 mm
Maximum value of SAR (interpolated) = 2.98 W/kg

Pin=250mW/Zoom Scan (5x5x7)/Cube 0: Measurement grid: dx=8mm, dy=8mm, dz=5mm
Reference Value = 56.81 V/m; Power Drift = -0.07 dB
Peak SAR (extrapolated) = 3.60 W/kg
SAR(1 g) = 2.56 W/kg; SAR(10 g) = 1.69 W/kg
Maximum value of SAR (measured) = 2.96 W/kg

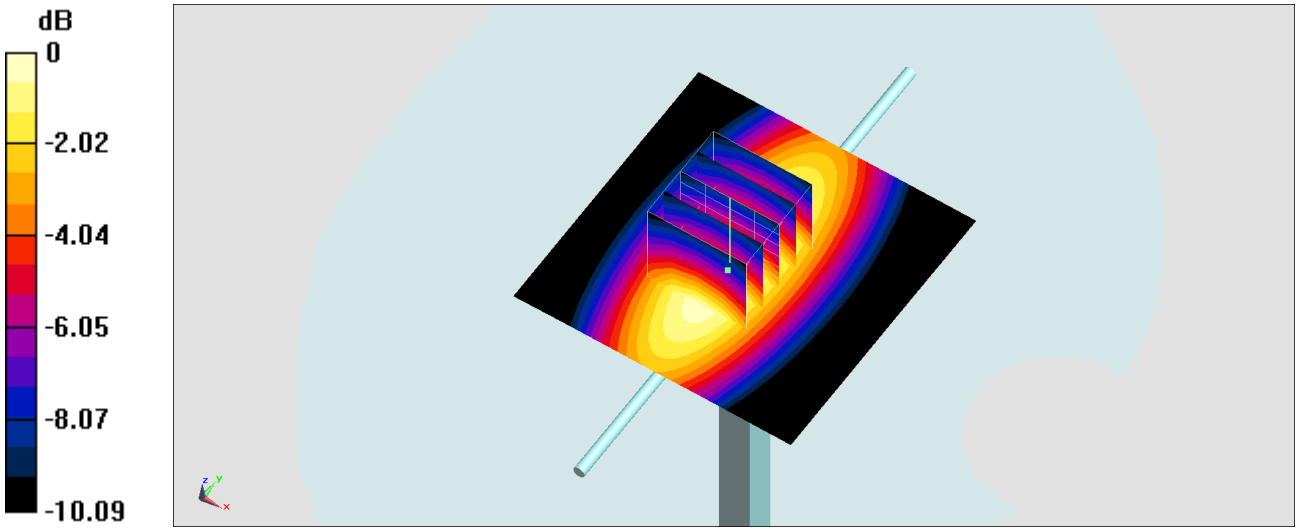

0 dB = 2.96 W/kg = 4.71 dBW/kg

System Check_Head_1900MHz

DUT: D1900V2-5d041

Communication System: CW; Frequency: 1900 MHz;Duty Cycle: 1:1
Medium: HSL_1900_180317 Medium parameters used: f = 1900 MHz; σ = 1.432 S/m; ε_r = 41.123; ρ = 1000 kg/m^3
Ambient Temperature：23.4 ℃; Liquid Temperature：22.4 ℃

DASY5 Configuration:
- Probe: ES3DV3 - SN3169; ConvF(5.03, 5.03, 5.03); Calibrated: 2017/5/11;
- Sensor-Surface: 3mm (Mechanical Surface Detection)
- Electronics: DAE4 Sn853; Calibrated: 2017/7/19
- Phantom: SAM_Left; Type: QD000P40CD; Serial: TP:1815
- Measurement SW: DASY52, Version 52.8 (8);SEMCAD X Version 14.6.10 (7373)

Pin=250mW/Area Scan (61x61x1): Interpolated grid: dx=1.500 mm, dy=1.500 mm
Maximum value of SAR (interpolated) = 13.5 W/kg

Pin=250mW/Zoom Scan (5x5x7)/Cube 0: Measurement grid: dx=8mm, dy=8mm, dz=5mm
Reference Value = 93.20 V/m; Power Drift = -0.05 dB
Peak SAR (extrapolated) = 18.3 W/kg
SAR(1 g) = 10.2 W/kg; SAR(10 g) = 5.35 W/kg
Maximum value of SAR (measured) = 12.7 W/kg

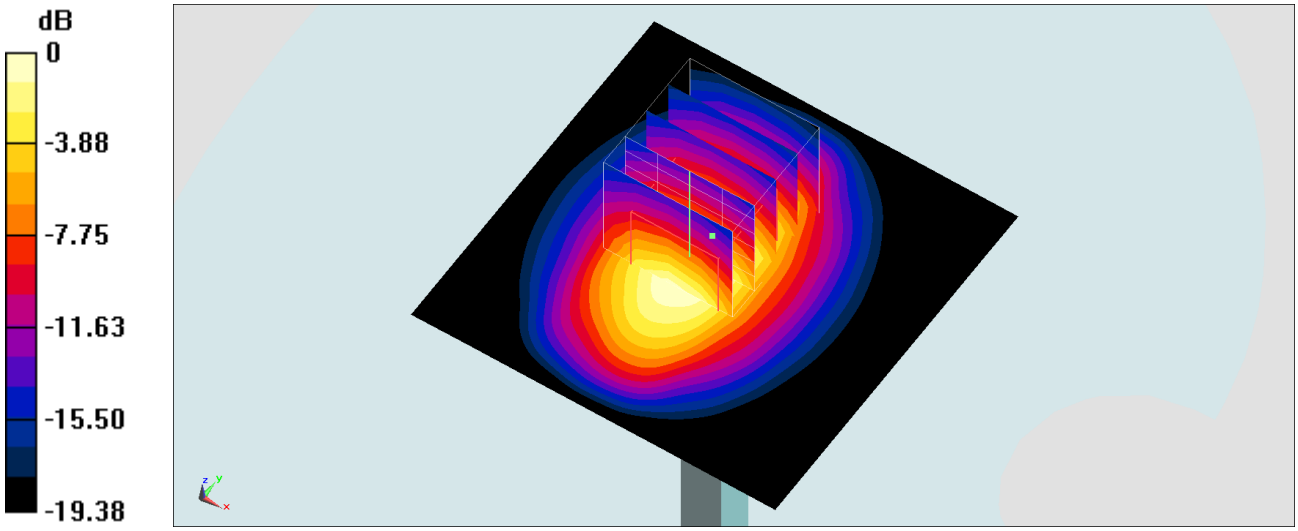

0 dB = 12.7 W/kg = 11.04 dBW/kg

System Check_Head_1900MHz

DUT: D1900V2-5d041

Communication System: CW; Frequency: 1900 MHz;Duty Cycle: 1:1
Medium: HSL_1900_180320 Medium parameters used: f = 1900 MHz; σ = 1.416 S/m; ε_r = 40.241; ρ = 1000 kg/m^3
Ambient Temperature：23.4 ℃; Liquid Temperature：22.4 ℃

DASY5 Configuration:
- Probe: ES3DV3 - SN3169; ConvF(5.03, 5.03, 5.03); Calibrated: 2017/5/11;
- Sensor-Surface: 3mm (Mechanical Surface Detection)
- Electronics: DAE4 Sn853; Calibrated: 2017/7/19
- Phantom: SAM_Right; Type: QD000P40CD; Serial: 1719
- Measurement SW: DASY52, Version 52.8 (8);SEMCAD X Version 14.6.10 (7373)

Pin=250mW/Area Scan (61x61x1): Interpolated grid: dx=1.500 mm, dy=1.500 mm
Maximum value of SAR (interpolated) = 13.4 W/kg

Pin=250mW/Zoom Scan (5x5x7)/Cube 0: Measurement grid: dx=8mm, dy=8mm, dz=5mm
Reference Value = 93.20 V/m; Power Drift = -0.05 dB
Peak SAR (extrapolated) = 18.1 W/kg
SAR(1 g) = 10 W/kg; SAR(10 g) = 5.28 W/kg
Maximum value of SAR (measured) = 12.5 W/kg

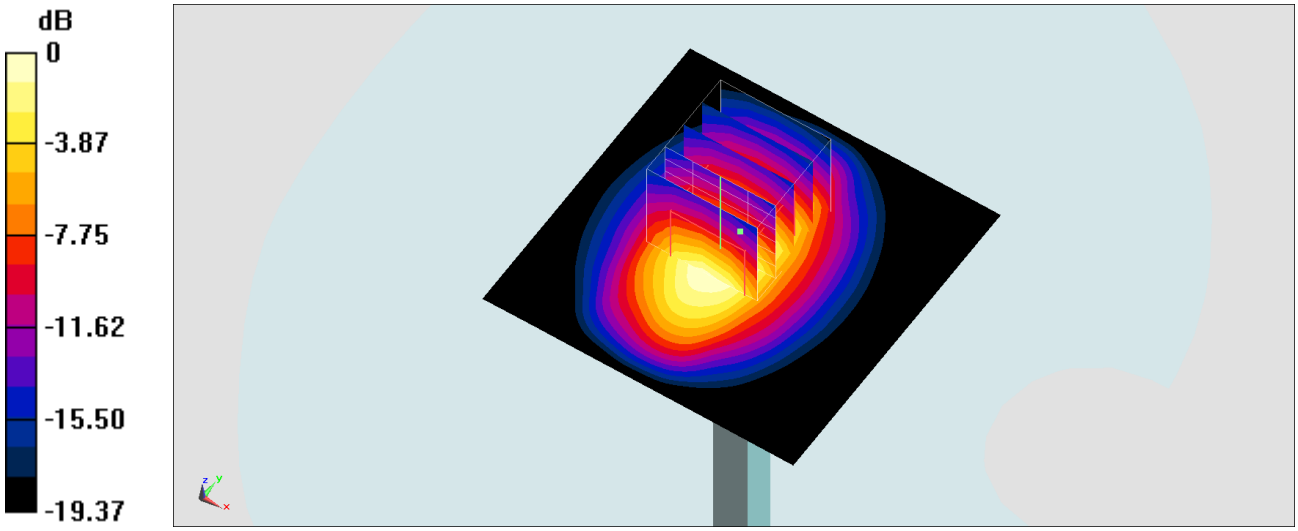

0 dB = 12.5 W/kg = 10.97 dBW/kg

System Check_Head_1900MHz

DUT: D1900V2-5d041

Communication System: CW; Frequency: 1900 MHz;Duty Cycle: 1:1
Medium: HSL_1900_180327 Medium parameters used: f = 1900 MHz; σ = 1.449 S/m; ε_r = 39.311; ρ = 1000 kg/m^3
Ambient Temperature：23.7 ℃; Liquid Temperature：22.7 ℃

DASY5 Configuration:
- Probe: ES3DV3 - SN3169; ConvF(5.03, 5.03, 5.03); Calibrated: 2017/5/11;
- Sensor-Surface: 3mm (Mechanical Surface Detection)
- Electronics: DAE4 Sn853; Calibrated: 2017/7/19
- Phantom: SAM_Left; Type: QD000P40CD; Serial: TP:1815
- Measurement SW: DASY52, Version 52.8 (8);SEMCAD X Version 14.6.10 (7373)

Pin=250mW/Area Scan (61x61x1): Interpolated grid: dx=1.500 mm, dy=1.500 mm
Maximum value of SAR (interpolated) = 14.0 W/kg

Pin=250mW/Zoom Scan (5x5x7)/Cube 0: Measurement grid: dx=8mm, dy=8mm, dz=5mm
Reference Value = 95.98 V/m; Power Drift = -0.01 dB
Peak SAR (extrapolated) = 18.8 W/kg
SAR(1 g) = 10.3 W/kg; SAR(10 g) = 5.4 W/kg
Maximum value of SAR (measured) = 12.8 W/kg

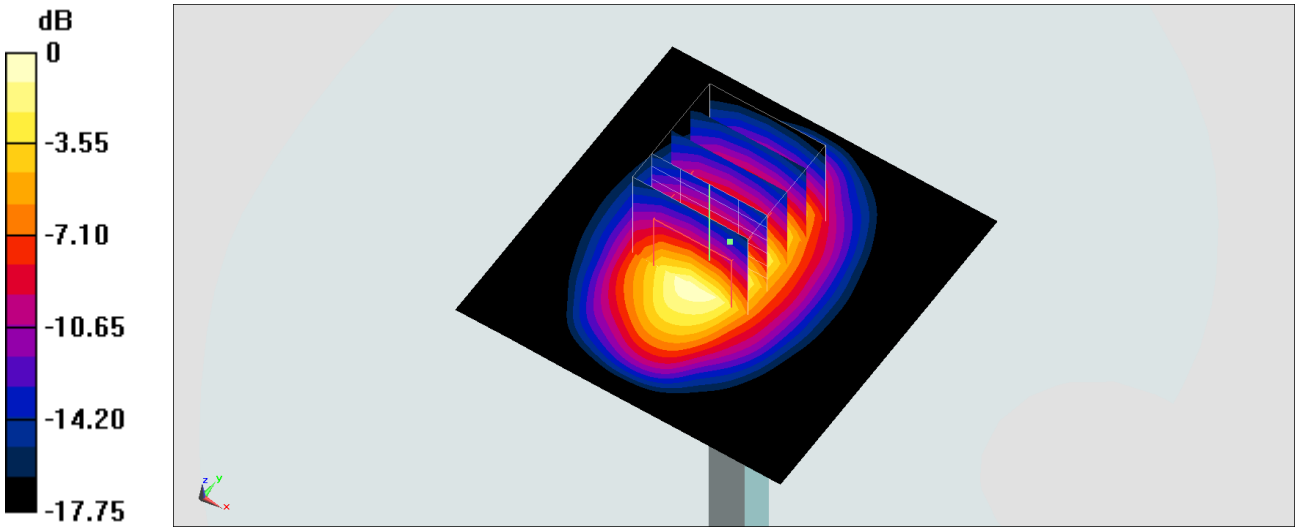

0 dB = 12.8 W/kg = 11.07 dBW/kg

System Check_Body_1900MHz

DUT: D1900V2-5d041

Communication System: CW; Frequency: 1900 MHz;Duty Cycle: 1:1
Medium: MSL_1900_180315 Medium parameters used: f = 1900 MHz; σ = 1.555 S/m; ε_r = 54.164; ρ = 1000 kg/m^3
Ambient Temperature：23.6 ℃; Liquid Temperature：22.6 ℃

DASY5 Configuration:
- Probe: ES3DV3 - SN3169; ConvF(4.72, 4.72, 4.72); Calibrated: 2017/5/11;
- Sensor-Surface: 3mm (Mechanical Surface Detection)
- Electronics: DAE4 Sn853; Calibrated: 2017/7/19
- Phantom: SAM_Right; Type: QD000P40CD; Serial: 1719
- Measurement SW: DASY52, Version 52.8 (8);SEMCAD X Version 14.6.10 (7373)

Pin=250mW/Area Scan (61x61x1): Interpolated grid: dx=1.500 mm, dy=1.500 mm
Maximum value of SAR (interpolated) = 13.3 W/kg

Pin=250mW/Zoom Scan (5x5x7)/Cube 0: Measurement grid: dx=8mm, dy=8mm, dz=5mm
Reference Value = 87.67 V/m; Power Drift = 0.02 dB
Peak SAR (extrapolated) = 17.5 W/kg
SAR(1 g) = 9.89 W/kg; SAR(10 g) = 5.2 W/kg
Maximum value of SAR (measured) = 12.1 W/kg

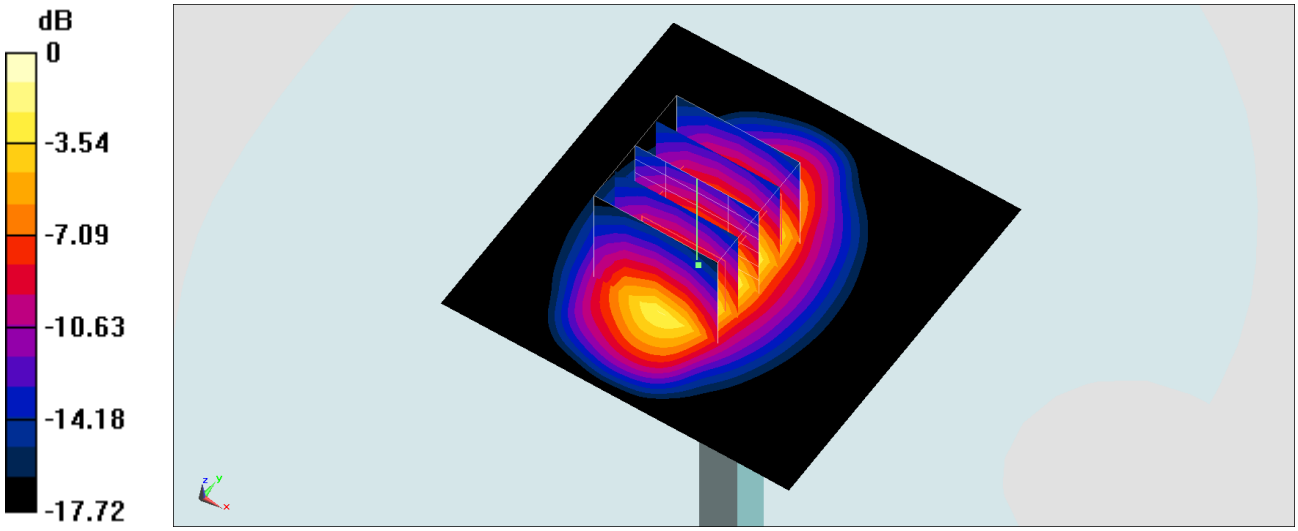

0 dB = 12.1 W/kg = 10.83 dBW/kg

System Check_Body_1900MHz

DUT: D1900V2-5d041

Communication System: CW; Frequency: 1900 MHz;Duty Cycle: 1:1
Medium: MSL_1900_180317 Medium parameters used: f = 1900 MHz; σ = 1.578 S/m; ε_r = 54.868; ρ = 1000 kg/m^3
Ambient Temperature：23.4 ℃; Liquid Temperature：22.4 ℃

DASY5 Configuration:
- Probe: ES3DV3 - SN3169; ConvF(4.72, 4.72, 4.72); Calibrated: 2017/5/11;
- Sensor-Surface: 3mm (Mechanical Surface Detection)
- Electronics: DAE4 Sn853; Calibrated: 2017/7/19
- Phantom: SAM_Right; Type: QD000P40CD; Serial: 1719
- Measurement SW: DASY52, Version 52.8 (8);SEMCAD X Version 14.6.10 (7373)

Pin=250mW/Area Scan (61x61x1): Interpolated grid: dx=1.500 mm, dy=1.500 mm
Maximum value of SAR (interpolated) = 13.5 W/kg

Pin=250mW/Zoom Scan (5x5x7)/Cube 0: Measurement grid: dx=8mm, dy=8mm, dz=5mm
Reference Value = 87.67 V/m; Power Drift = 0.02 dB
Peak SAR (extrapolated) = 17.7 W/kg
SAR(1 g) = 10 W/kg; SAR(10 g) = 5.27 W/kg
Maximum value of SAR (measured) = 12.3 W/kg

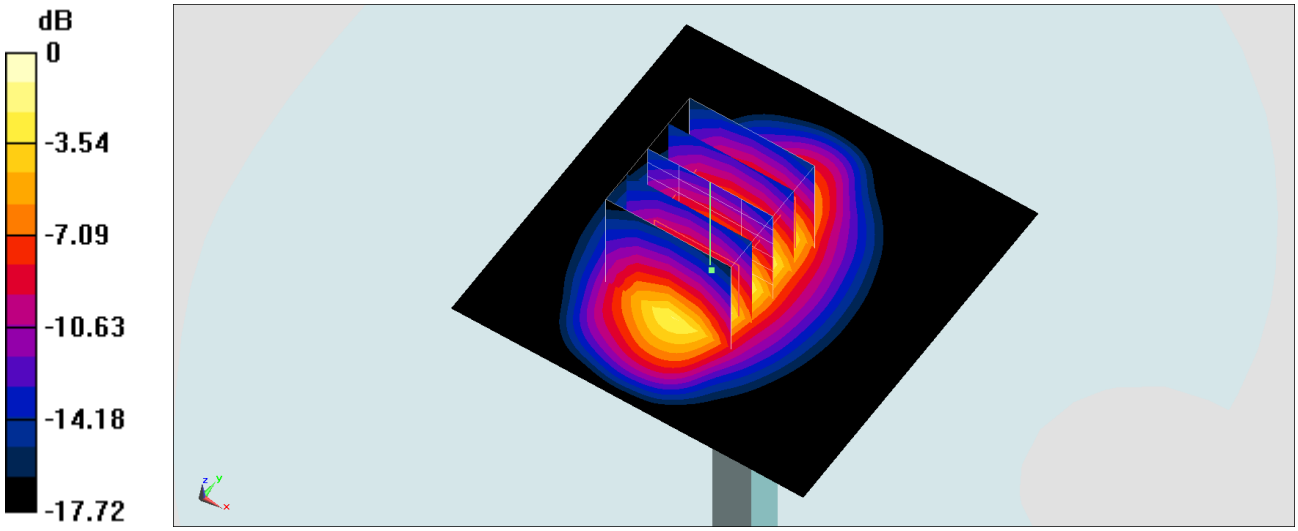

0 dB = 12.3 W/kg = 10.90 dBW/kg

System Check_Body_1900MHz

DUT: D1900V2-5d041

Communication System: CW; Frequency: 1900 MHz;Duty Cycle: 1:1
Medium: MSL_1900_180319 Medium parameters used: f = 1900 MHz; σ = 1.574 S/m; ε_r = 51.994; ρ = 1000 kg/m^3
Ambient Temperature：23.3 ℃; Liquid Temperature：22.3 ℃

DASY5 Configuration:
- Probe: ES3DV3 - SN3169; ConvF(4.72, 4.72, 4.72); Calibrated: 2017/5/11;
- Sensor-Surface: 3mm (Mechanical Surface Detection)
- Electronics: DAE4 Sn853; Calibrated: 2017/7/19
- Phantom: SAM_Right; Type: QD000P40CD; Serial: 1719
- Measurement SW: DASY52, Version 52.8 (8);SEMCAD X Version 14.6.10 (7373)

Pin=250mW/Area Scan (61x61x1): Interpolated grid: dx=1.500 mm, dy=1.500 mm
Maximum value of SAR (interpolated) = 14.9 W/kg

Pin=250mW/Zoom Scan (5x5x7)/Cube 0: Measurement grid: dx=8mm, dy=8mm, dz=5mm
Reference Value = 97.35 V/m; Power Drift = -0.08 dB
Peak SAR (extrapolated) = 20.0 W/kg
SAR(1 g) = 10.6 W/kg; SAR(10 g) = 5.46 W/kg
Maximum value of SAR (measured) = 15.2 W/kg

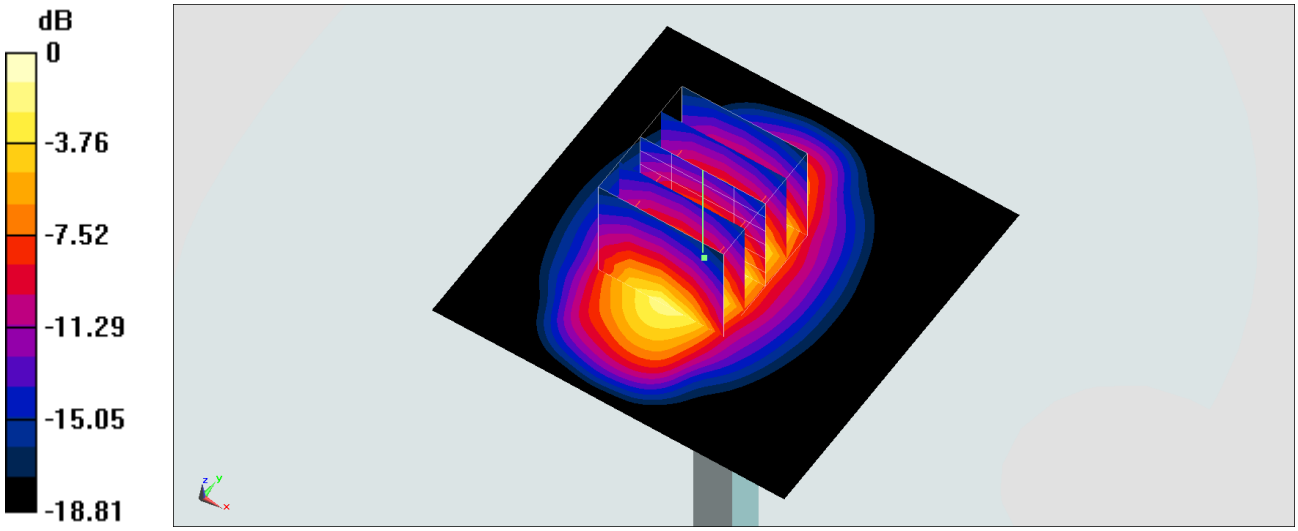

0 dB = 15.2 W/kg = 11.82 dBW/kg

System Check_Body_1900MHz

DUT: D1900V2-5d041

Communication System: CW; Frequency: 1900 MHz;Duty Cycle: 1:1
Medium: MSL_1900_180324 Medium parameters used: f = 1900 MHz; σ = 1.556 S/m; ε_r = 53.879; ρ = 1000 kg/m^3
Ambient Temperature：23.2 ℃; Liquid Temperature：22.2 ℃

DASY5 Configuration:
- Probe: ES3DV3 - SN3169; ConvF(4.72, 4.72, 4.72); Calibrated: 2017/5/11;
- Sensor-Surface: 3mm (Mechanical Surface Detection)
- Electronics: DAE4 Sn853; Calibrated: 2017/7/19
- Phantom: SAM_Right; Type: QD000P40CD; Serial: 1719
- Measurement SW: DASY52, Version 52.8 (8);SEMCAD X Version 14.6.10 (7373)

Pin=250mW/Area Scan (61x61x1): Interpolated grid: dx=1.500 mm, dy=1.500 mm
Maximum value of SAR (interpolated) = 13.3 W/kg

Pin=250mW/Zoom Scan (5x5x7)/Cube 0: Measurement grid: dx=8mm, dy=8mm, dz=5mm
Reference Value = 87.67 V/m; Power Drift = 0.17 dB
Peak SAR (extrapolated) = 17.5 W/kg
SAR(1 g) = 9.89 W/kg; SAR(10 g) = 5.2 W/kg
Maximum value of SAR (measured) = 12.1 W/kg

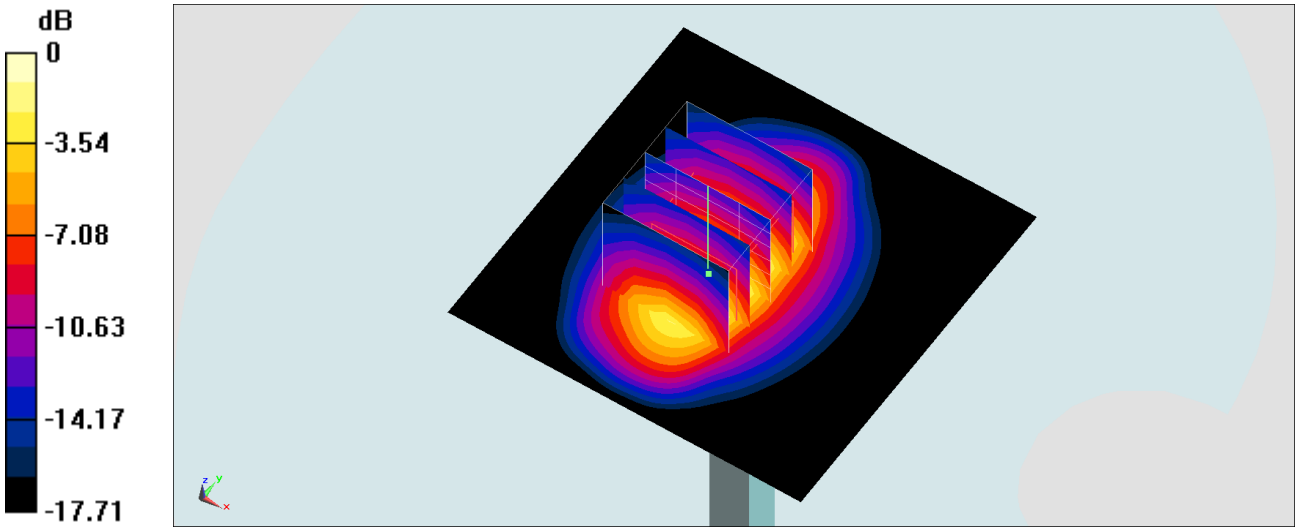

0 dB = 12.1 W/kg = 10.83 dBW/kg

System Check_Head_2450MHz

DUT: D2450V2-736

Communication System: CW; Frequency: 2450 MHz;Duty Cycle: 1:1
Medium: HSL_2450_180315 Medium parameters used: f = 2450 MHz; σ = 1.859 S/m; ε_r = 39.778; ρ = 1000 kg/m^3
Ambient Temperature：23.5 ℃; Liquid Temperature：22.5 ℃

DASY5 Configuration:
- Probe: EX3DV4 - SN3976; ConvF(7.75, 7.75, 7.75); Calibrated: 2018/1/23;
- Sensor-Surface: 1.4mm (Mechanical Surface Detection)
- Electronics: DAE3 Sn495; Calibrated: 2017/5/22
- Phantom: SAM-Left; Type: QD 000 P40 C; Serial: TP-1446
- Measurement SW: DASY52, Version 52.8 (8);SEMCAD X Version 14.6.10 (7373)

Pin=250mW/Area Scan (61x61x1): Interpolated grid: dx=1.200 mm, dy=1.200 mm
Maximum value of SAR (interpolated) = 23.6 W/kg

Pin=250mW/Zoom Scan (7x7x7)/Cube 0: Measurement grid: dx=5mm, dy=5mm, dz=5mm
Reference Value = 116.2 V/m; Power Drift = -0.08 dB
Peak SAR (extrapolated) = 29.2 W/kg
SAR(1 g) = 13.6 W/kg; SAR(10 g) = 6.06 W/kg
Maximum value of SAR (measured) = 22.9 W/kg

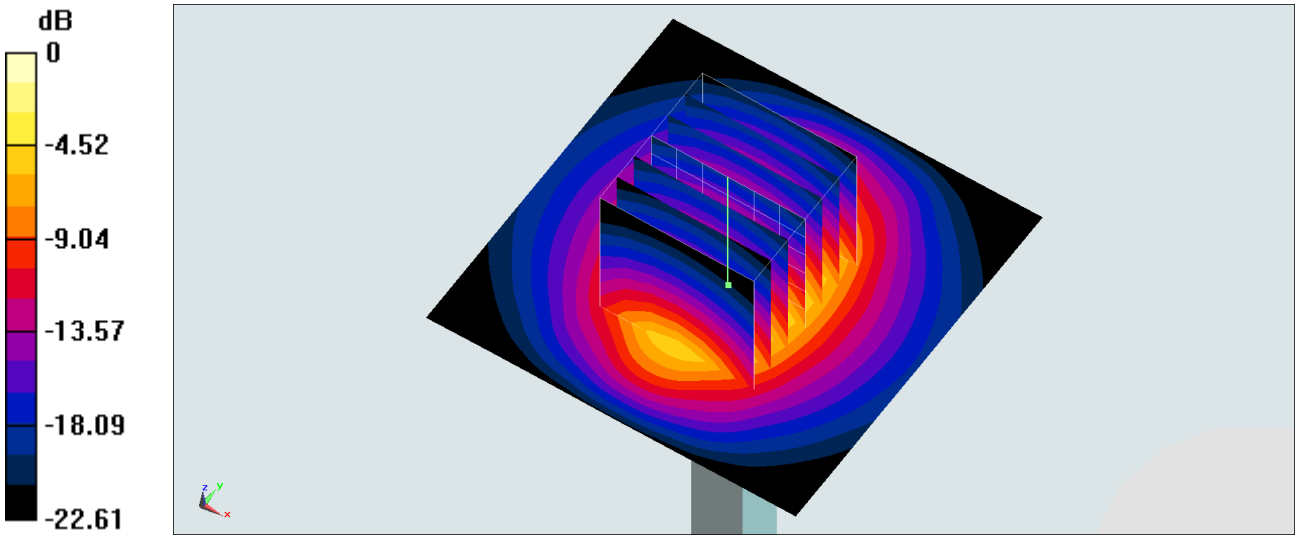

0 dB = 22.9 W/kg = 13.60 dBW/kg

System Check_Head_2450MHz

DUT: D2450V2-736

Communication System: CW; Frequency: 2450 MHz;Duty Cycle: 1:1
Medium: HSL_2450_180317 Medium parameters used: f = 2450 MHz; σ = 1.84 S/m; ε_r = 40.001; ρ = 1000 kg/m^3
Ambient Temperature：23.4 ℃; Liquid Temperature：22.4 ℃

DASY5 Configuration:
- Probe: EX3DV4 - SN3976; ConvF(7.75, 7.75, 7.75); Calibrated: 2018/1/23;
- Sensor-Surface: 1.4mm (Mechanical Surface Detection)
- Electronics: DAE3 Sn495; Calibrated: 2017/5/22
- Phantom: SAM-Left; Type: QD 000 P40 C; Serial: TP-1446
- Measurement SW: DASY52, Version 52.8 (8);SEMCAD X Version 14.6.10 (7373)

Pin=250mW/Area Scan (61x61x1): Interpolated grid: dx=1.200 mm, dy=1.200 mm
Maximum value of SAR (interpolated) = 23.3 W/kg

Pin=250mW/Zoom Scan (7x7x7)/Cube 0: Measurement grid: dx=5mm, dy=5mm, dz=5mm
Reference Value = 116.2 V/m; Power Drift = -0.04 dB
Peak SAR (extrapolated) = 28.9 W/kg
SAR(1 g) = 13.5 W/kg; SAR(10 g) = 6 W/kg
Maximum value of SAR (measured) = 22.7 W/kg

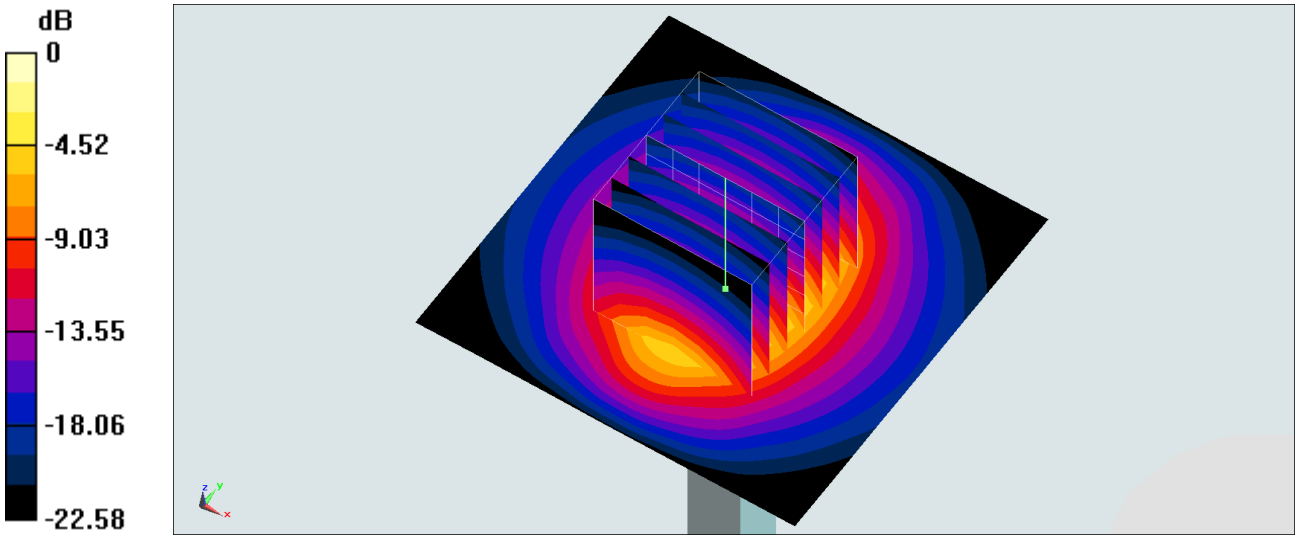

0 dB = 22.7 W/kg = 13.56 dBW/kg

System Check_Head_2450MHz

DUT: D2450V2-736

Communication System: CW; Frequency: 2450 MHz;Duty Cycle: 1:1
Medium: HSL_2450_180321 Medium parameters used: f = 2450 MHz; σ = 1.826 S/m; ε_r = 39.878; ρ = 1000 kg/m^3
Ambient Temperature：23.1 ℃; Liquid Temperature：22.1 ℃

DASY5 Configuration:
- Probe: EX3DV4 - SN3976; ConvF(7.75, 7.75, 7.75); Calibrated: 2018/1/23;
- Sensor-Surface: 1.4mm (Mechanical SurfaceDetection)
- Electronics: DAE3 Sn495; Calibrated: 2017/5/22
- Phantom: SAM_Right; Type: QD000P40CD; Serial: 1884
- Measurement SW: DASY52, Version 52.8 (8);SEMCAD X Version 14.6.10 (7373)

Pin=250mW/Area Scan (71x71x1): Interpolated grid: dx=1.200 mm, dy=1.200 mm
Maximum value of SAR (interpolated) = 18.4 W/kg

Pin=250mW/Zoom Scan (7x7x7)/Cube 0: Measurement grid: dx=5mm, dy=5mm, dz=5mm
Reference Value = 109.0 V/m; Power Drift = 0.02 dB
Peak SAR (extrapolated) = 26.8 W/kg
SAR(1 g) = 12.3 W/kg; SAR(10 g) = 5.61 W/kg
Maximum value of SAR (measured) = 21.3 W/kg

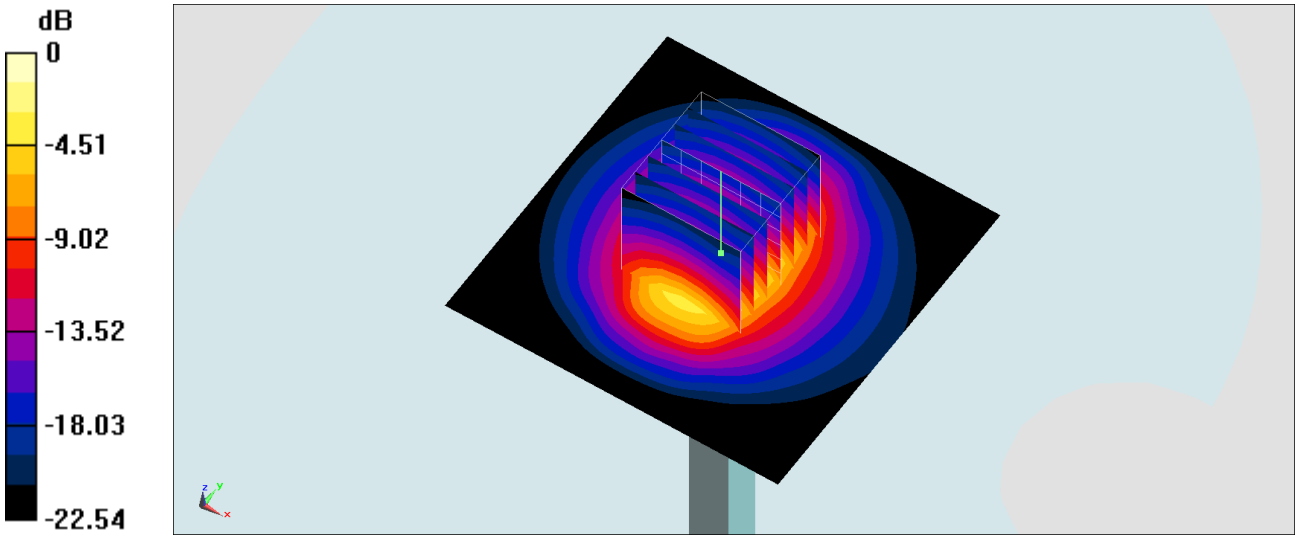

0 dB = 21.3 W/kg = 13.28 dBW/kg

System Check_Head_2450MHz

DUT: D2450V2-736

Communication System: CW; Frequency: 2450 MHz;Duty Cycle: 1:1
Medium: HSL_2450_180325 Medium parameters used: f = 2450 MHz; σ = 1.824 S/m; ε_r = 39.938; ρ = 1000 kg/m^3
Ambient Temperature：23.6 ℃; Liquid Temperature：22.6 ℃

DASY5 Configuration:
- Probe: EX3DV4 - SN3976; ConvF(7.75, 7.75, 7.75); Calibrated: 2018/1/23;
- Sensor-Surface: 1.4mm (Mechanical Surface Detection)
- Electronics: DAE3 Sn495; Calibrated: 2017/5/22
- Phantom: SAM_Right; Type: QD000P40CD; Serial: 1884
- Measurement SW: DASY52, Version 52.8 (8);SEMCAD X Version 14.6.10 (7373)

Pin=250mW/Area Scan (61x61x1): Interpolated grid: dx=1.200 mm, dy=1.200 mm
Maximum value of SAR (interpolated) = 23.5 W/kg

Pin=250mW/Zoom Scan (7x7x7)/Cube 0: Measurement grid: dx=5mm, dy=5mm, dz=5mm
Reference Value = 110.9 V/m; Power Drift = 0.02 dB
Peak SAR (extrapolated) = 28.3 W/kg
SAR(1 g) = 13.5 W/kg; SAR(10 g) = 6.2 W/kg
Maximum value of SAR (measured) = 22.5 W/kg

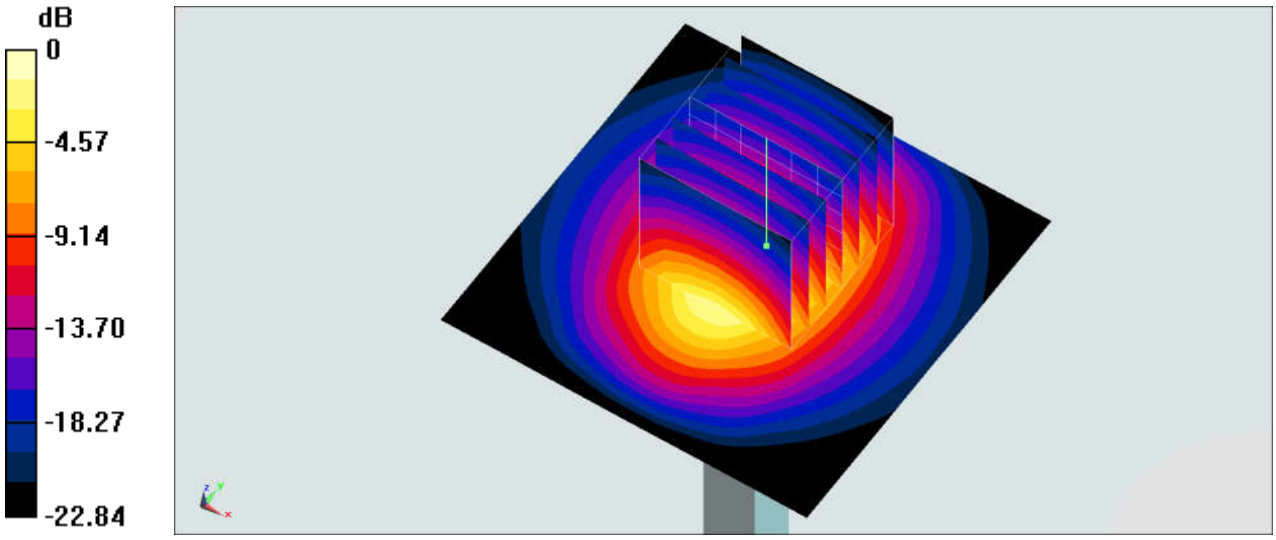

0 dB = 22.5 W/kg = 13.52 dBW/kg

System Check_Body_2450MHz

DUT: D2450V2-736

Communication System: CW ; Frequency: 2450 MHz;Duty Cycle: 1:1
Medium: MSL_2450_180316 Medium parameters used: f = 2450 MHz; σ = 1.998 S/m; ε_r = 53.747; ρ = 1000 kg/m^3
Ambient Temperature：23.6 ℃; Liquid Temperature：22.6 ℃

DASY5 Configuration:
- Probe: ES3DV3 - SN3169; ConvF(4.28, 4.28, 4.28); Calibrated: 2017/5/11;
- Sensor-Surface: 3mm (Mechanical Surface Detection)
- Electronics: DAE4 Sn853; Calibrated: 2017/7/19
- Phantom: SAM_Right; Type: QD000P40CD; Serial: 1719
- Measurement SW: DASY52, Version 52.8 (8);SEMCAD X Version 14.6.10 (7373)

Pin=250mW/Area Scan (61x61x1): Interpolated grid: dx=1.200 mm, dy=1.200 mm
Maximum value of SAR (interpolated) = 15.7 W/kg

Pin=250mW/Zoom Scan (7x7x7)/Cube 0: Measurement grid: dx=5mm, dy=5mm, dz=5mm
Reference Value = 93.00 V/m; Power Drift = 0.05 dB
Peak SAR (extrapolated) = 24.1 W/kg
SAR(1 g) = 12.3 W/kg; SAR(10 g) = 5.82 W/kg
Maximum value of SAR (measured) = 16.2 W/kg

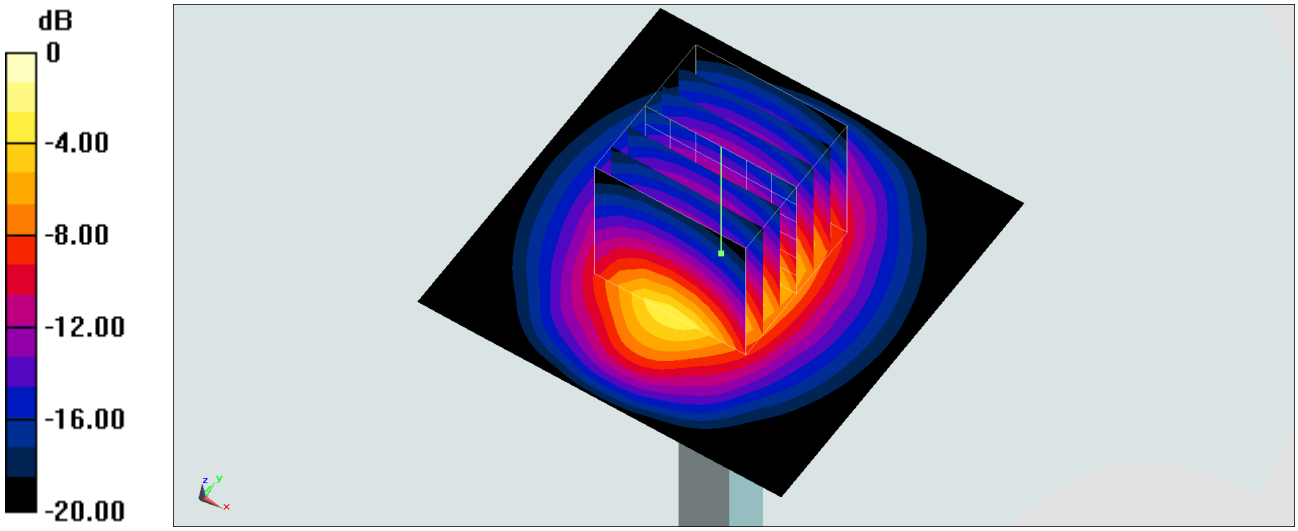

0 dB = 16.2 W/kg = 12.10 dBW/kg

System Check_Body_2450MHz

DUT: D2450V2-736

Communication System: CW; Frequency: 2450 MHz;Duty Cycle: 1:1
Medium: MSL_2450_180318 Medium parameters used: f = 2450 MHz; σ = 1.954 S/m; ε_r = 53.24; ρ = 1000 kg/m^3
Ambient Temperature：23.3 ℃; Liquid Temperature：22.3 ℃

DASY5 Configuration:
- Probe: ES3DV3 - SN3169; ConvF(4.28, 4.28, 4.28); Calibrated: 2017/5/11;
- Sensor-Surface: 3mm (Mechanical Surface Detection)
- Electronics: DAE4 Sn853; Calibrated: 2017/7/19
- Phantom: SAM_Right; Type: QD000P40CD; Serial: 1719
- Measurement SW: DASY52, Version 52.8 (8);SEMCAD X Version 14.6.10 (7373)

Pin=250mW/Area Scan (61x61x1): Interpolated grid: dx=1.200 mm, dy=1.200 mm
Maximum value of SAR (interpolated) = 16.1 W/kg

Pin=250mW/Zoom Scan (7x7x7)/Cube 0: Measurement grid: dx=5mm, dy=5mm, dz=5mm
Reference Value = 94.10 V/m; Power Drift = -0.05 dB
Peak SAR (extrapolated) = 23.7 W/kg
SAR(1 g) = 12.2 W/kg; SAR(10 g) = 5.75 W/kg
Maximum value of SAR (measured) = 16.0 W/kg

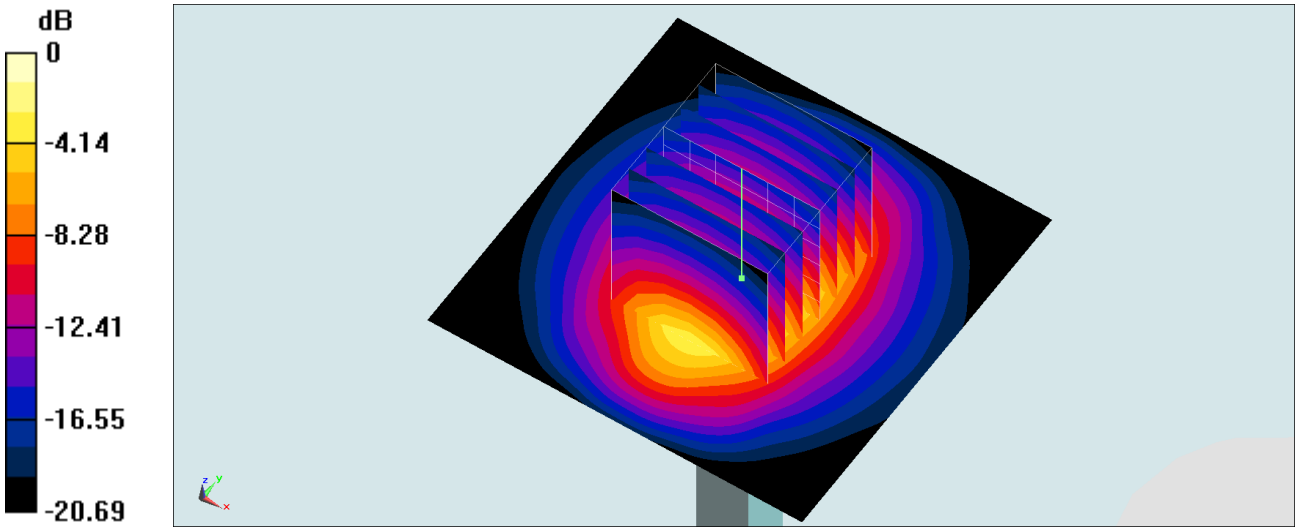

0 dB = 16.0 W/kg = 12.04 dBW/kg

System Check_Body_2450MHz

DUT: D2450V2-736

Communication System: CW; Frequency: 2450 MHz;Duty Cycle: 1:1
Medium: MSL_2450_180326 Medium parameters used: f = 2450 MHz; σ = 1.978 S/m; ε_r = 51.246; ρ = 1000 kg/m^3
Ambient Temperature：23.3 ℃; Liquid Temperature：22.3 ℃

DASY5 Configuration:
- Probe: ES3DV3 - SN3169; ConvF(4.28, 4.28, 4.28); Calibrated: 2017/5/11;
- Sensor-Surface: 3mm (Mechanical Surface Detection)
- Electronics: DAE4 Sn853; Calibrated: 2017/7/19
- Phantom: SAM_Right; Type: QD000P40CD; Serial: 1719
- Measurement SW: DASY52, Version 52.8 (8);SEMCAD X Version 14.6.10 (7373)

Pin=250mW/Area Scan (61x61x1): Interpolated grid: dx=1.200 mm, dy=1.200 mm
Maximum value of SAR (interpolated) = 16.1 W/kg

Pin=250mW/Zoom Scan (7x7x7)/Cube 0: Measurement grid: dx=5mm, dy=5mm, dz=5mm
Reference Value = 91.22 V/m; Power Drift = 0.14 dB
Peak SAR (extrapolated) = 23.7 W/kg
SAR(1 g) = 12.2 W/kg; SAR(10 g) = 5.75 W/kg
Maximum value of SAR (measured) = 16.2 W/kg

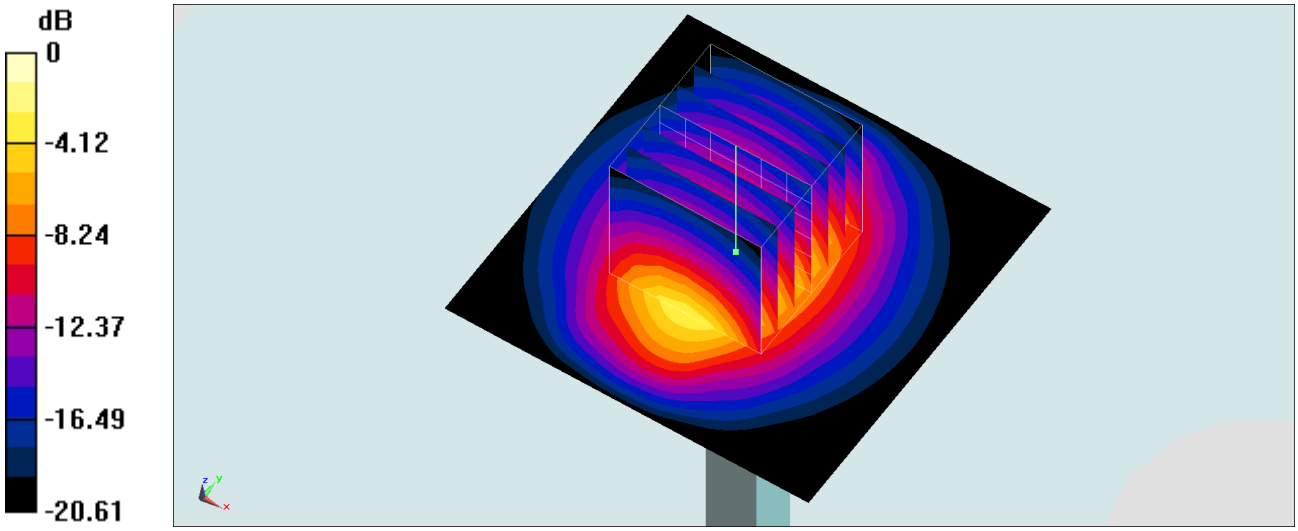

0 dB = 16.2 W/kg = 12.10 dBW/kg

System Check_Head_2600MHz

DUT: D2600V2-1008

Communication System: CW ; Frequency: 2600 MHz;Duty Cycle: 1:1
Medium: HSL_2450_180315 Medium parameters used: f = 2600 MHz; σ = 2.035 S/m; ε_r = 39.202; ρ = 1000 kg/m^3
Ambient Temperature：23.5 ℃; Liquid Temperature：22.5 ℃

DASY5 Configuration:
- Probe: EX3DV4 - SN3976; ConvF(7.54, 7.54, 7.54); Calibrated: 2018/1/23;
- Sensor-Surface: 1.4mm (Mechanical Surface Detection)
- Electronics: DAE3 Sn495; Calibrated: 2017/5/22
- Phantom: SAM-Left; Type: QD 000 P40 C; Serial: TP-1446
- Measurement SW: DASY52, Version 52.8 (8);SEMCAD X Version 14.6.10 (7373)

Pin=250mW/Area Scan (61x61x1): Interpolated grid: dx=1.200 mm, dy=1.200 mm
Maximum value of SAR (interpolated) = 26.6 W/kg

Pin=250mW/Zoom Scan (7x7x7)/Cube 0: Measurement grid: dx=5mm, dy=5mm, dz=5mm
Reference Value = 117.8 V/m; Power Drift = -0.08 dB
Peak SAR (extrapolated) = 33.0 W/kg
SAR(1 g) = 15.3 W/kg; SAR(10 g) = 6.82 W/kg
Maximum value of SAR (measured) = 25.9 W/kg

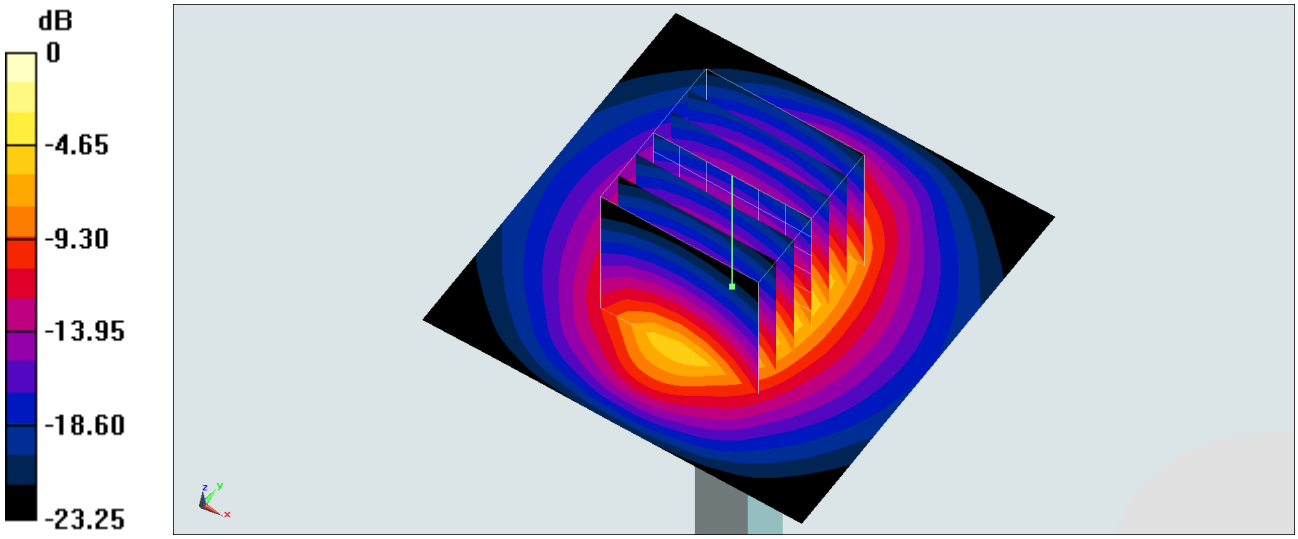

0 dB = 25.9 W/kg = 14.13 dBW/kg

System Check_Head_2600MHz

DUT: D2600V2-1008

Communication System: CW ; Frequency: 2600 MHz;Duty Cycle: 1:1
Medium: HSL_2450_180317 Medium parameters used: f = 2600 MHz; σ = 2.015 S/m; ε_r = 39.425; ρ = 1000 kg/m^3
Ambient Temperature：23.4 ℃; Liquid Temperature：22.4 ℃

DASY5 Configuration:
- Probe: EX3DV4 - SN3976; ConvF(7.54, 7.54, 7.54); Calibrated: 2018/1/23;
- Sensor-Surface: 1.4mm (Mechanical Surface Detection)
- Electronics: DAE3 Sn495; Calibrated: 2017/5/22
- Phantom: SAM-Left; Type: QD 000 P40 C; Serial: TP-1446
- Measurement SW: DASY52, Version 52.8 (8);SEMCAD X Version 14.6.10 (7373)

Pin=250mW/Area Scan (61x61x1): Interpolated grid: dx=1.200 mm, dy=1.200 mm
Maximum value of SAR (interpolated) = 26.3 W/kg

Pin=250mW/Zoom Scan (7x7x7)/Cube 0: Measurement grid: dx=5mm, dy=5mm, dz=5mm
Reference Value = 117.8 V/m; Power Drift = -0.05 dB
Peak SAR (extrapolated) = 32.6 W/kg
SAR(1 g) = 15.2 W/kg; SAR(10 g) = 6.76 W/kg
Maximum value of SAR (measured) = 25.6 W/kg

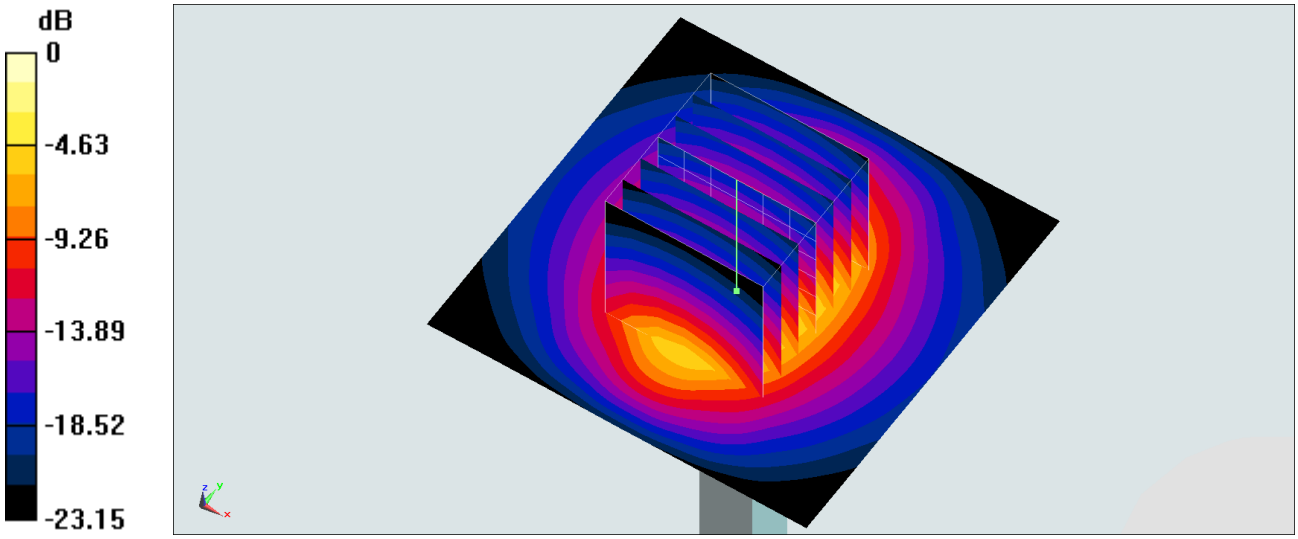

0 dB = 25.6 W/kg = 14.08 dBW/kg

System Check_Head_2600MHz

DUT: D2600V2-1008

Communication System: CW; Frequency: 2600 MHz;Duty Cycle: 1:1
Medium: HSL_2600_180320 Medium parameters used: f = 2600 MHz; σ = 1.957 S/m; ε_r = 39.235; ρ = 1000 kg/m^3
Ambient Temperature：23.4 ℃; Liquid Temperature：22.4 ℃

DASY5 Configuration:
- Probe: ES3DV3 - SN3169; ConvF(4.47, 4.47, 4.47); Calibrated: 2017/5/11;
- Sensor-Surface: 3mm (Mechanical Surface Detection)
- Electronics: DAE4 Sn853; Calibrated: 2017/7/19
- Phantom: SAM_Right; Type: QD000P40CD; Serial: 1719
- Measurement SW: DASY52, Version 52.8 (8);SEMCAD X Version 14.6.10 (7373)

Pin=250mW/Area Scan (81x81x1): Interpolated grid: dx=1.200 mm, dy=1.200 mm
Maximum value of SAR (interpolated) = 17.7 W/kg

Pin=250mW/Zoom Scan (7x7x7)/Cube 0: Measurement grid: dx=5mm, dy=5mm, dz=5mm
Reference Value = 96.71 V/m; Power Drift = 0.05 dB
Peak SAR (extrapolated) = 29.4 W/kg
SAR(1 g) = 13.2 W/kg; SAR(10 g) = 5.94 W/kg
Maximum value of SAR (measured) = 17.7 W/kg

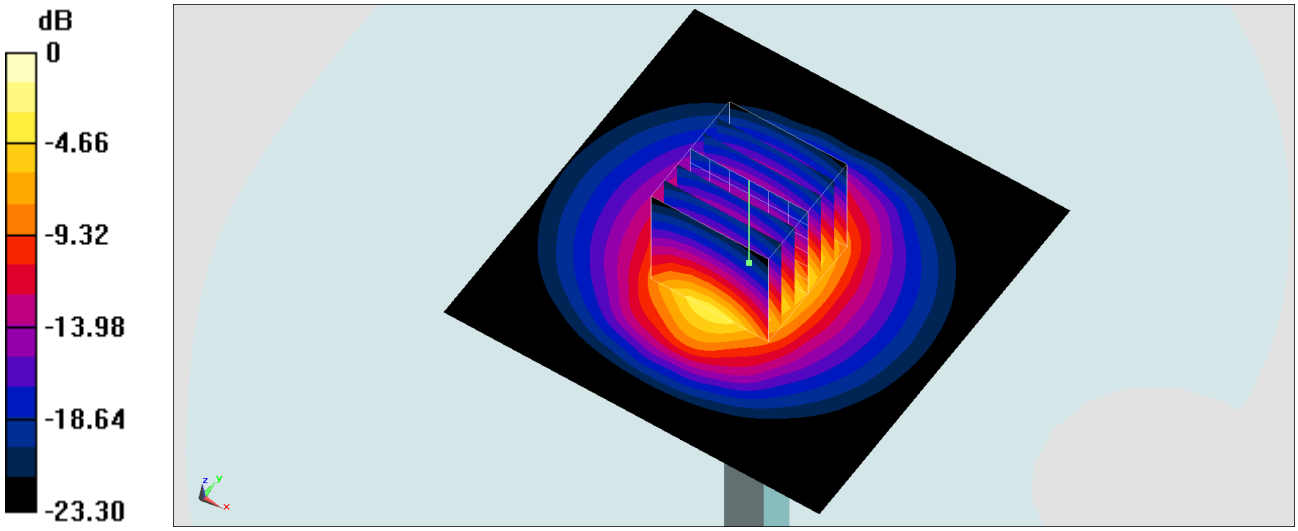

0 dB = 17.7 W/kg = 12.48 dBW/kg

System Check_Head_2600MHz

DUT: D2600V2-1008

Communication System: CW; Frequency: 2600 MHz;Duty Cycle: 1:1
Medium: HSL_2600_180321 Medium parameters used: f = 2600 MHz; σ = 2 S/m; ε_r = 39.302; ρ = 1000 kg/m^3
Ambient Temperature：23.1 ℃; Liquid Temperature：22.1 ℃

DASY5 Configuration:
- Probe: EX3DV4 - SN3976; ConvF(7.54, 7.54, 7.54); Calibrated: 2018/1/23;
- Sensor-Surface: 1.4mm (Mechanical Surface Detection)
- Electronics: DAE3 Sn495; Calibrated: 2017/5/22
- Phantom: SAM_Right; Type: QD000P40CD; Serial: 1884
- Measurement SW: DASY52, Version 52.8 (8);SEMCAD X Version 14.6.10 (7373)

Pin=250mW/Area Scan (61x61x1): Interpolated grid: dx=1.200 mm, dy=1.200 mm
Maximum value of SAR (interpolated) = 23.4 W/kg

Pin=250mW/Zoom Scan (7x7x7)/Cube 0: Measurement grid: dx=5mm, dy=5mm, dz=5mm
Reference Value = 111.9 V/m; Power Drift = -0.05 dB
Peak SAR (extrapolated) = 29.8 W/kg
SAR(1 g) = 13.5 W/kg; SAR(10 g) = 6.03 W/kg
Maximum value of SAR (measured) = 23.5 W/kg

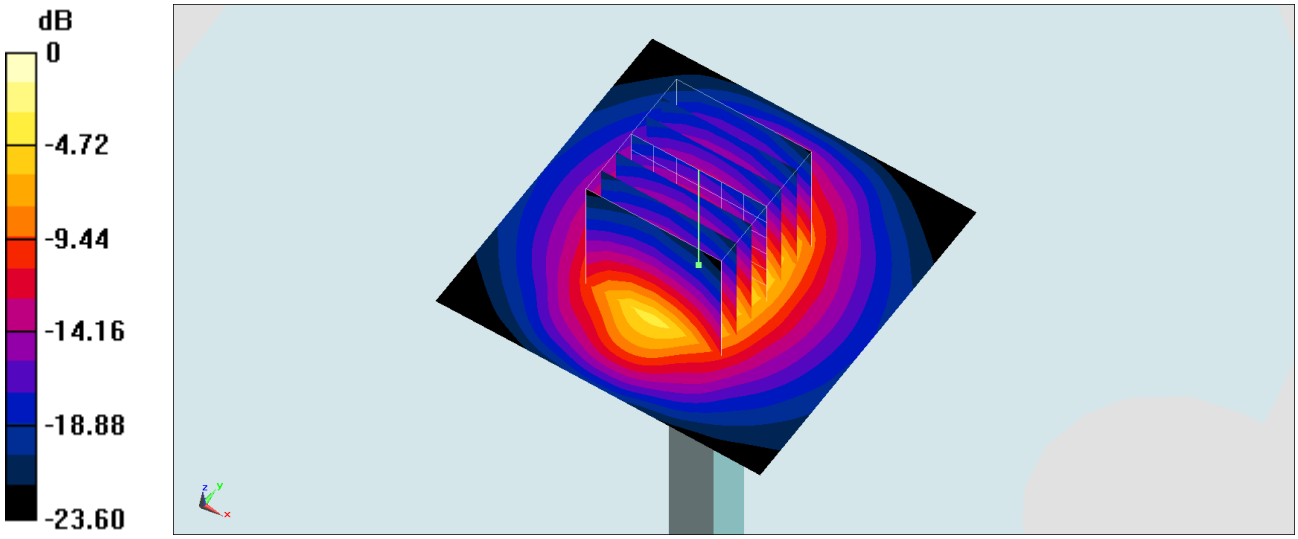

0 dB = 23.5 W/kg = 13.71 dBW/kg

System Check_Head_2600MHz

DUT: D2600V2-1008

Communication System: CW; Frequency: 2600 MHz;Duty Cycle: 1:1
Medium: HSL_2600_180325 Medium parameters used: f = 2600 MHz; σ = 1.997 S/m; ε_r = 39.362; ρ = 1000 kg/m^3
Ambient Temperature：23.6 ℃; Liquid Temperature：22.6 ℃

DASY5 Configuration:
- Probe: EX3DV4 - SN3976; ConvF(7.54, 7.54, 7.54); Calibrated: 2018/1/23;
- Sensor-Surface: 1.4mm (Mechanical Surface Detection)
- Electronics: DAE3 Sn495; Calibrated: 2017/5/22
- Phantom: SAM_Right; Type: QD000P40CD; Serial: 1884
- Measurement SW: DASY52, Version 52.8 (8);SEMCAD X Version 14.6.10 (7373)

Pin=250mW/Area Scan (61x61x1): Interpolated grid: dx=1.200 mm, dy=1.200 mm
Maximum value of SAR (interpolated) = 26.9 W/kg

Pin=250mW/Zoom Scan (7x7x7)/Cube 0: Measurement grid: dx=5mm, dy=5mm, dz=5mm
Reference Value = 118.4 V/m; Power Drift = -0.05 dB
Peak SAR (extrapolated) = 32.9 W/kg
SAR(1 g) = 15.1 W/kg; SAR(10 g) = 6.78 W/kg
Maximum value of SAR (measured) = 25.9 W/kg

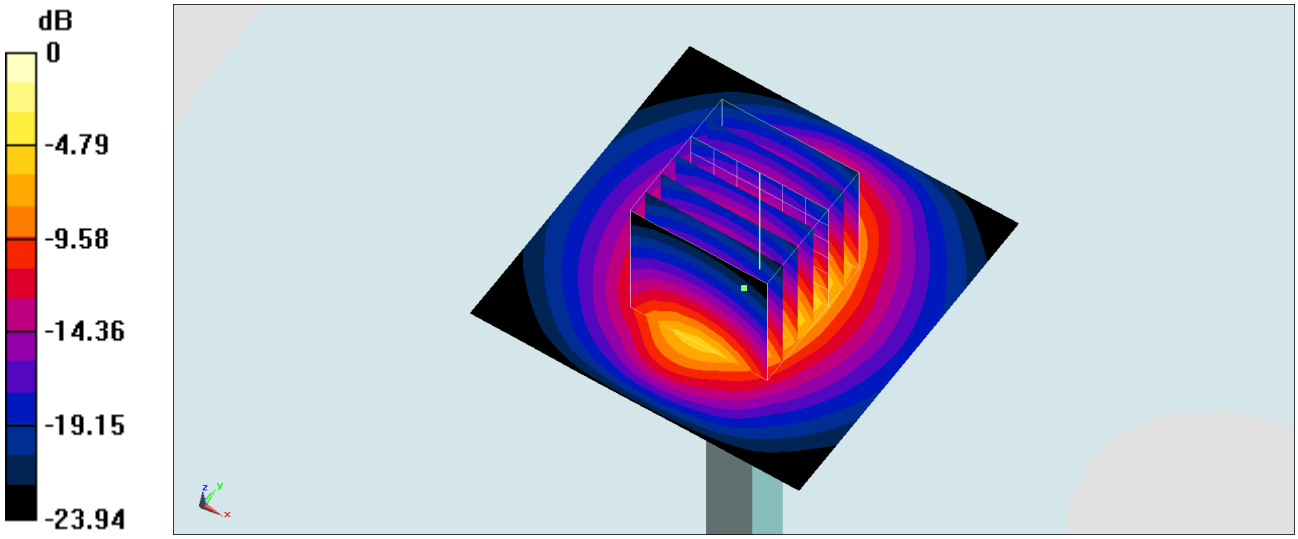

0 dB = 25.9 W/kg = 14.13 dBW/kg

System Check_Body_2600MHz

DUT: D2600V2-1008

Communication System: CW; Frequency: 2600 MHz;Duty Cycle: 1:1
Medium: MSL_2600_180314 Medium parameters used: f = 2600 MHz; σ = 2.206 S/m; ε_r = 51.857; ρ = 1000 kg/m^3
Ambient Temperature：23.6 ℃; Liquid Temperature：22.6 ℃

DASY5 Configuration:
- Probe: ES3DV3 - SN3169; ConvF(4.17, 4.17, 4.17); Calibrated: 2017/5/11;
- Sensor-Surface: 3mm (Mechanical Surface Detection)
- Electronics: DAE4 Sn853; Calibrated: 2017/7/19
- Phantom: SAM_Right; Type: QD000P40CD; Serial: 1719
- Measurement SW: DASY52, Version 52.8 (8);SEMCAD X Version 14.6.10 (7373)

Pin=250mW/Area Scan (71x71x1): Interpolated grid: dx=1.200 mm, dy=1.200 mm
Maximum value of SAR (interpolated) = 21.5 W/kg

Pin=250mW/Zoom Scan (7x7x7)/Cube 0: Measurement grid: dx=5mm, dy=5mm, dz=5mm
Reference Value = 107.7 V/m; Power Drift = 0.04 dB
Peak SAR (extrapolated) = 30.5 W/kg
SAR(1 g) = 14.1 W/kg; SAR(10 g) = 6.3 W/kg
Maximum value of SAR (measured) = 22.0 W/kg

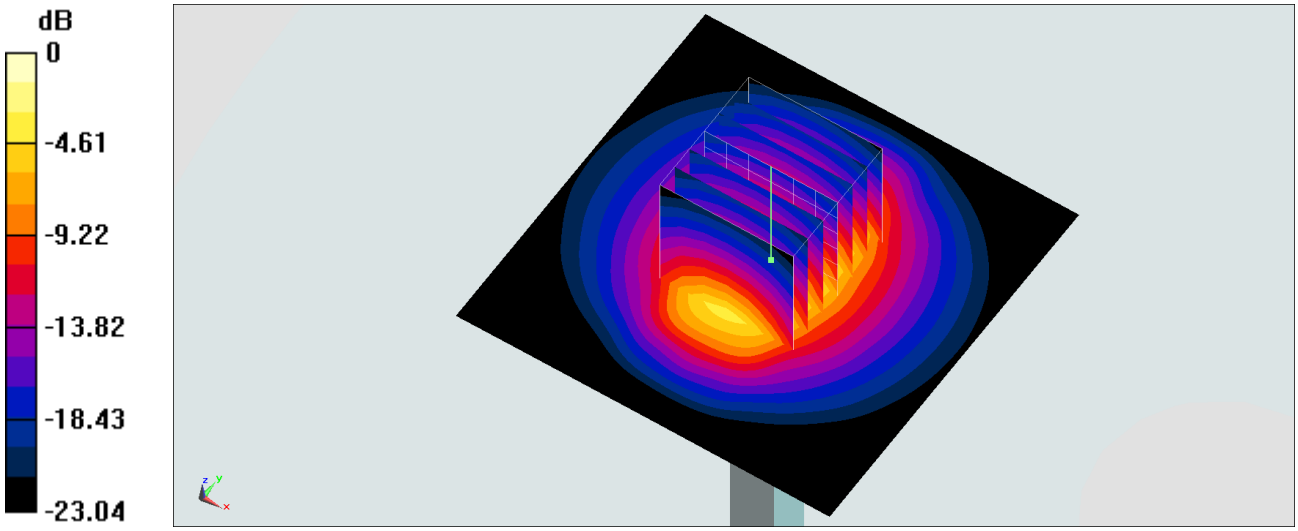

0 dB = 22.0 W/kg = 13.42 dBW/kg

System Check_Body_2600MHz

DUT: D2600V2-1008

Communication System: CW; Frequency: 2600 MHz;Duty Cycle: 1:1
Medium: MSL_2600_180317 Medium parameters used: f = 2600 MHz; σ = 2.188 S/m; ε_r = 54.282; ρ = 1000 kg/m^3
Ambient Temperature：23.4 ℃; Liquid Temperature：22.4 ℃

DASY5 Configuration:
- Probe: ES3DV3 - SN3169; ConvF(4.17, 4.17, 4.17); Calibrated: 2017/5/11;
- Sensor-Surface: 3mm (Mechanical Surface Detection)
- Electronics: DAE4 Sn853; Calibrated: 2017/7/19
- Phantom: SAM_Right; Type: QD000P40CD; Serial: 1719
- Measurement SW: DASY52, Version 52.8 (8);SEMCAD X Version 14.6.10 (7373)

Pin=250mW/Area Scan (61x61x1): Interpolated grid: dx=1.200 mm, dy=1.200 mm
Maximum value of SAR (interpolated) = 19.6 W/kg

Pin=250mW/Zoom Scan (7x7x7)/Cube 0: Measurement grid: dx=5mm, dy=5mm, dz=5mm
Reference Value = 92.65 V/m; Power Drift = 0.06 dB
Peak SAR (extrapolated) = 28.3 W/kg
SAR(1 g) = 13.8 W/kg; SAR(10 g) = 6.2 W/kg
Maximum value of SAR (measured) = 18.1 W/kg

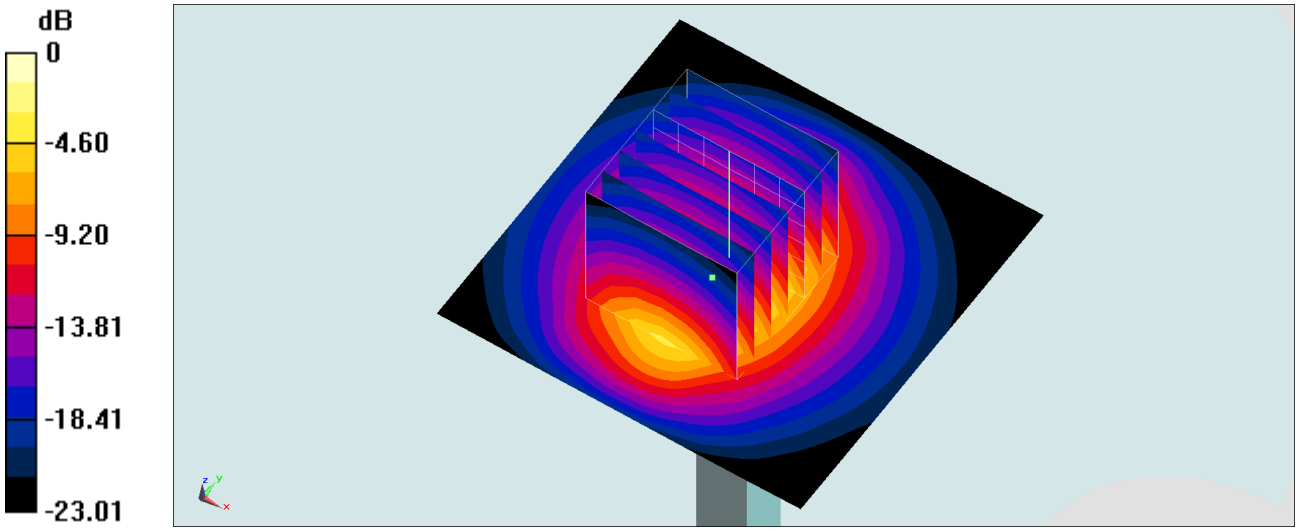

0 dB = 18.1 W/kg = 12.58 dBW/kg

System Check_Body_2600MHz

DUT: D2600V2-1008

Communication System: CW; Frequency: 2600 MHz;Duty Cycle: 1:1
Medium: MSL_2600_180318 Medium parameters used: f = 2600 MHz; σ = 2.154 S/m; ε_r = 52.74; ρ = 1000 kg/m^3
Ambient Temperature：23.3 ℃; Liquid Temperature：22.3 ℃

DASY5 Configuration:
- Probe: ES3DV3 - SN3169; ConvF(4.17, 4.17, 4.17); Calibrated: 2017/5/11;
- Sensor-Surface: 3mm (Mechanical Surface Detection)
- Electronics: DAE4 Sn853; Calibrated: 2017/7/19
- Phantom: SAM_Right; Type: QD000P40CD; Serial: 1719
- Measurement SW: DASY52, Version 52.8 (8);SEMCAD X Version 14.6.10 (7373)

Pin=250mW/Area Scan (71x71x1): Interpolated grid: dx=1.200 mm, dy=1.200 mm
Maximum value of SAR (interpolated) = 18.8 W/kg

Pin=250mW/Zoom Scan (7x7x7)/Cube 0: Measurement grid: dx=5mm, dy=5mm, dz=5mm
Reference Value = 97.47 V/m; Power Drift = 0.11 dB
Peak SAR (extrapolated) = 28.6 W/kg
SAR(1 g) = 13.1 W/kg; SAR(10 g) = 5.82 W/kg
Maximum value of SAR (measured) = 20.7 W/kg

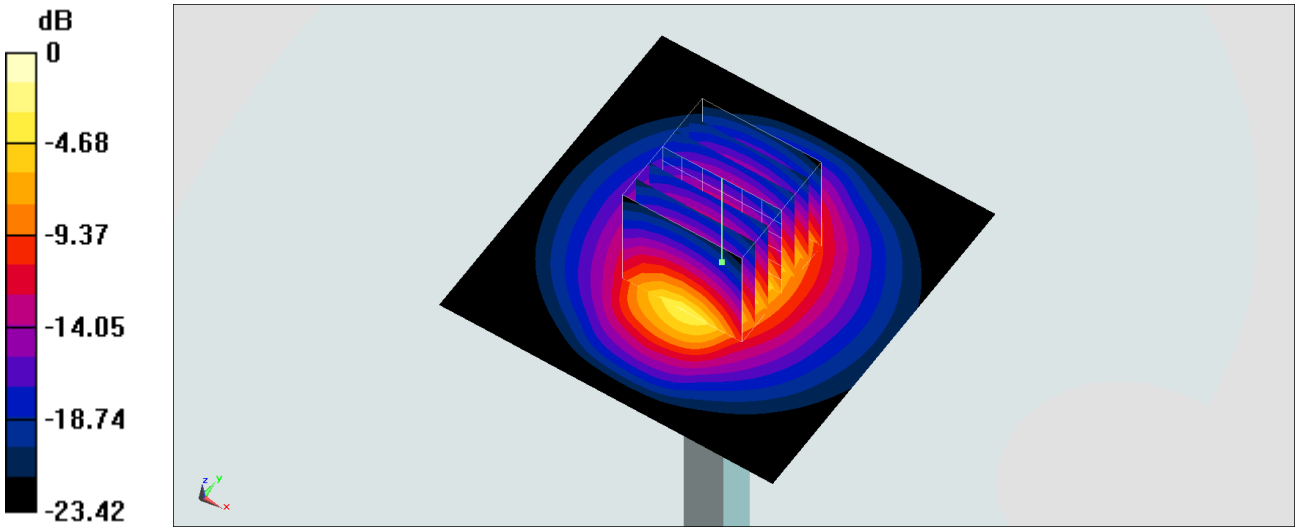

0 dB = 20.7 W/kg = 13.16 dBW/kg

System Check_Body_2600MHz

DUT: D2600V2-1008

Communication System: CW; Frequency: 2600 MHz;Duty Cycle: 1:1
Medium: MSL_2600_180324 Medium parameters used: f = 2600 MHz; σ = 2.141 S/m; ε_r = 51.344; ρ = 1000 kg/m^3
Ambient Temperature：23.2 ℃; Liquid Temperature：22.2 ℃

DASY5 Configuration:
- Probe: ES3DV3 - SN3169; ConvF(4.17, 4.17, 4.17); Calibrated: 2017/5/11;
- Sensor-Surface: 3mm (Mechanical Surface Detection)
- Electronics: DAE4 Sn853; Calibrated: 2017/7/19
- Phantom: SAM_Right; Type: QD000P40CD; Serial: 1719
- Measurement SW: DASY52, Version 52.8 (8);SEMCAD X Version 14.6.10 (7373)

Pin=250mW/Area Scan (61x61x1): Interpolated grid: dx=1.200 mm, dy=1.200 mm
Maximum value of SAR (interpolated) = 19.2 W/kg

Pin=250mW/Zoom Scan (7x7x7)/Cube 0: Measurement grid: dx=5mm, dy=5mm, dz=5mm
Reference Value = 92.65 V/m; Power Drift = 0.01 dB
Peak SAR (extrapolated) = 27.7 W/kg
SAR(1 g) = 13.5 W/kg; SAR(10 g) = 6.07 W/kg
Maximum value of SAR (measured) = 17.7 W/kg

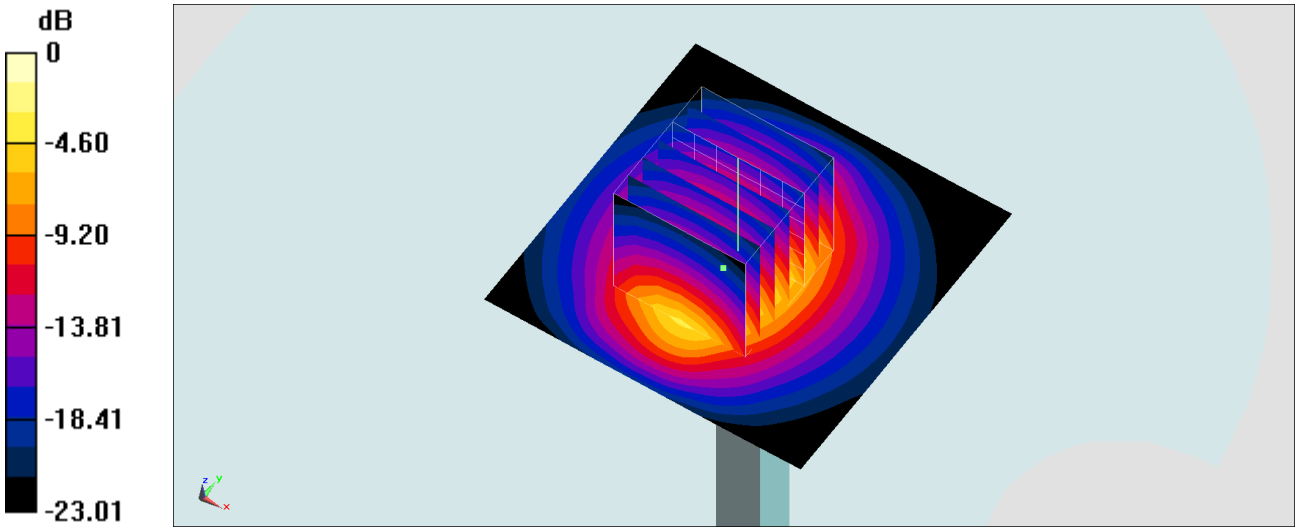

0 dB = 17.7 W/kg = 12.48 dBW/kg

System Check_Body_2600MHz

DUT: D2600V2-1008

Communication System: CW; Frequency: 2600 MHz;Duty Cycle: 1:1
Medium: MSL_2600_180326 Medium parameters used: f = 2600 MHz; σ = 2.195 S/m; ε_r = 50.737; ρ = 1000 kg/m^3
Ambient Temperature：23.3 ℃; Liquid Temperature：22.3 ℃

DASY5 Configuration:
- Probe: ES3DV3 - SN3169; ConvF(4.17, 4.17, 4.17); Calibrated: 2017/5/11;
- Sensor-Surface: 3mm (Mechanical Surface Detection)
- Electronics: DAE4 Sn853; Calibrated: 2017/7/19
- Phantom: SAM_Right; Type: QD000P40CD; Serial: 1719
- Measurement SW: DASY52, Version 52.8 (8);SEMCAD X Version 14.6.10 (7373)

Pin=250mW/Area Scan (61x61x1): Interpolated grid: dx=1.200 mm, dy=1.200 mm
Maximum value of SAR (interpolated) = 19.7 W/kg

Pin=250mW/Zoom Scan (7x7x7)/Cube 0: Measurement grid: dx=5mm, dy=5mm, dz=5mm
Reference Value = 92.65 V/m; Power Drift = 0.06 dB
Peak SAR (extrapolated) = 28.4 W/kg
SAR(1 g) = 13.8 W/kg; SAR(10 g) = 6.22 W/kg
Maximum value of SAR (measured) = 18.2 W/kg

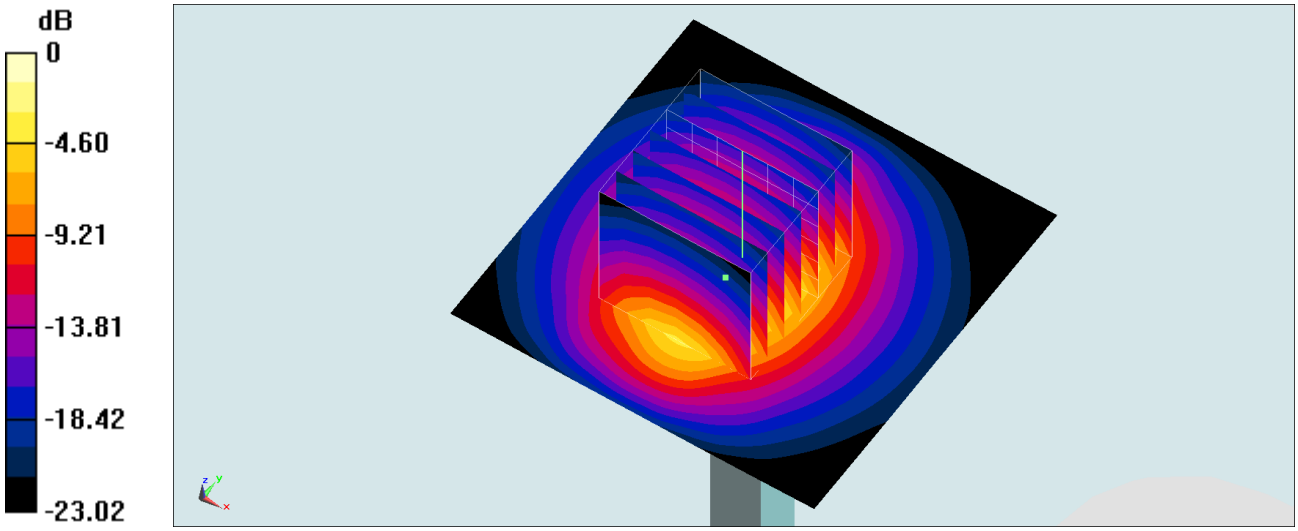

0 dB = 18.2 W/kg = 12.60 dBW/kg

System Check_Head_5250MHz

DUT: D5GHzV2-1006

Communication System: CW; Frequency: 5250 MHz;Duty Cycle: 1:1
Medium: HSL_5G_180314 Medium parameters used: f = 5250 MHz; σ = 4.552 S/m; ε_r = 35.889; ρ = 1000 kg/m^3
Ambient Temperature：23.5 ℃; Liquid Temperature：22.5 ℃

DASY5 Configuration:
- Probe: EX3DV4 - SN3976; ConvF(5.56, 5.56, 5.56); Calibrated: 2018/1/23;
- Sensor-Surface: 1.4mm (Mechanical Surface Detection)
- Electronics: DAE3 Sn495; Calibrated: 2017/5/22
- Phantom: SAM_Right; Type: QD000P40CD; Serial: 1884
- Measurement SW: DASY52, Version 52.8 (8);SEMCAD X Version 14.6.10 (7373)

Pin=100mW/Area Scan (71x71x1): Interpolated grid: dx=1.000 mm, dy=1.000 mm
Maximum value of SAR (interpolated) = 22.3 W/kg

Pin=100mW/Zoom Scan (7x7x7)/Cube 0: Measurement grid: dx=4mm, dy=4mm, dz=1.4mm
Reference Value = 77.79 V/m; Power Drift = -0.02 dB
Peak SAR (extrapolated) = 36.2 W/kg
SAR(1 g) = 8.56 W/kg; SAR(10 g) = 2.36 W/kg
Maximum value of SAR (measured) = 21.4 W/kg

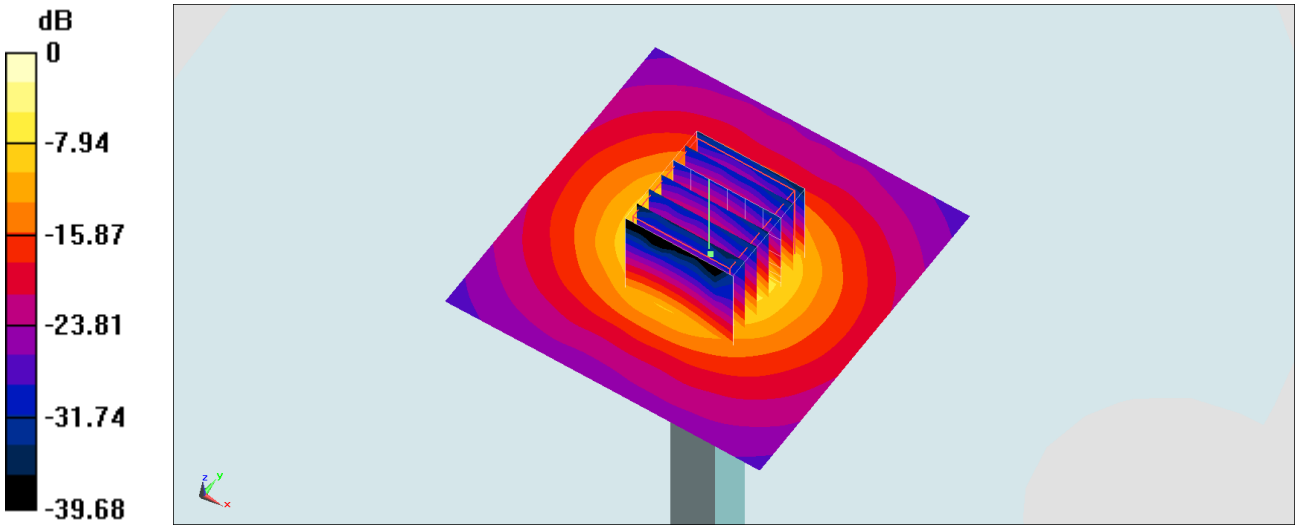

0 dB = 21.4 W/kg = 13.30 dBW/kg

System Check_Head_5250MHz

DUT: D5GHzV2-1006

Communication System: CW; Frequency: 5250 MHz;Duty Cycle: 1:1
Medium: HSL_5G_180327 Medium parameters used: f = 5250 MHz; σ = 4.688 S/m; ε_r = 36.11; ρ = 1000 kg/m^3
Ambient Temperature：23.4 ℃; Liquid Temperature：22.4 ℃

DASY5 Configuration:
- Probe: EX3DV4 - SN3976; ConvF(5.56, 5.56, 5.56); Calibrated: 2018/1/23;
- Sensor-Surface: 1.4mm (Mechanical Surface Detection)
- Electronics: DAE3 Sn495; Calibrated: 2017/5/22
- Phantom: SAM-Left; Type: QD 000 P40 C; Serial: TP-1446
- Measurement SW: DASY52, Version 52.8 (8);SEMCAD X Version 14.6.10 (7373)

Pin=100mW/Area Scan (71x71x1): Interpolated grid: dx=1.000 mm, dy=1.000 mm
Maximum value of SAR (interpolated) = 20.0 W/kg

Pin=100mW/Zoom Scan (7x7x7)/Cube 0: Measurement grid: dx=4mm, dy=4mm, dz=1.4mm
Reference Value = 74.53 V/m; Power Drift = -0.14 dB
Peak SAR (extrapolated) = 35.0 W/kg
SAR(1 g) = 8.36 W/kg; SAR(10 g) = 2.32 W/kg
Maximum value of SAR (measured) = 20.2 W/kg

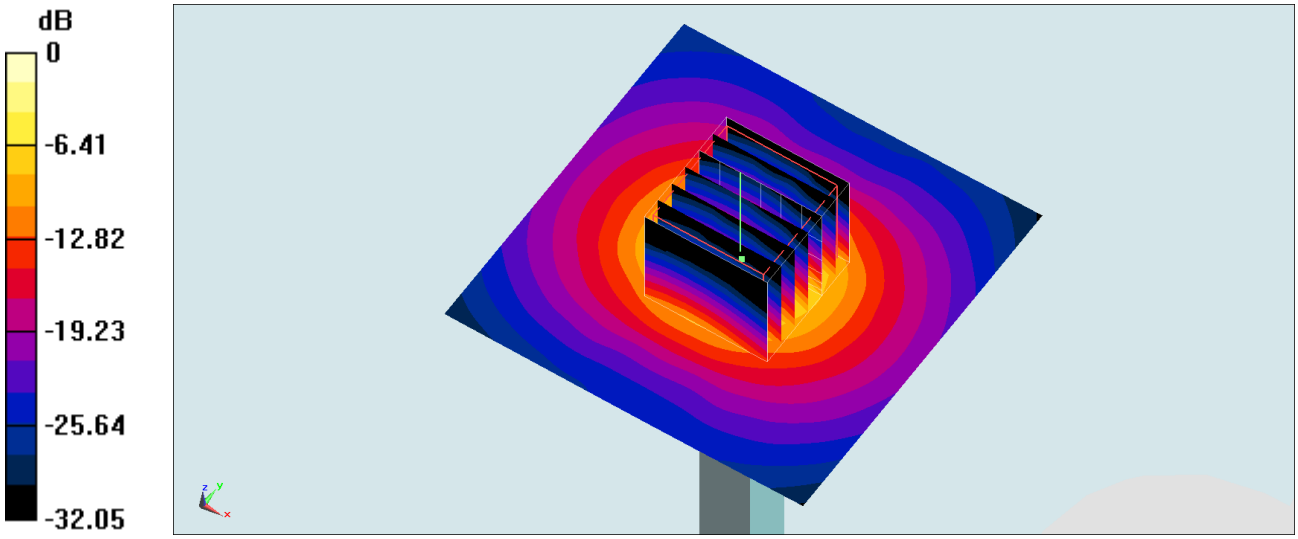

0 dB = 20.2 W/kg = 13.05 dBW/kg

System Check_Head_5250MHz

DUT: D5GHzV2-1006

Communication System: CW; Frequency: 5250 MHz;Duty Cycle: 1:1
Medium: HSL_5G_180318 Medium parameters used: f = 5250 MHz; σ = 4.662 S/m; ε_r = 36.623; ρ = 1000 kg/m^3
Ambient Temperature：23.3 ℃; Liquid Temperature：22.3 ℃

DASY5 Configuration:
- Probe: EX3DV4 - SN3976; ConvF(5.56, 5.56, 5.56); Calibrated: 2018/1/23;
- Sensor-Surface: 1.4mm (Mechanical Surface Detection)
- Electronics: DAE3 Sn495; Calibrated: 2017/5/22
- Phantom: SAM_Right; Type: QD000P40CD; Serial: 1884
- Measurement SW: DASY52, Version 52.8 (8);SEMCAD X Version 14.6.10 (7373)

Pin=100mW/Area Scan (71x71x1): Interpolated grid: dx=1.000 mm, dy=1.000 mm
Maximum value of SAR (interpolated) = 19.9 W/kg

Pin=100mW/Zoom Scan (7x7x7)/Cube 0: Measurement grid: dx=4mm, dy=4mm, dz=1.4mm
Reference Value = 74.53 V/m; Power Drift = -0.14 dB
Peak SAR (extrapolated) = 34.8 W/kg
SAR(1 g) = 8.32 W/kg; SAR(10 g) = 2.31 W/kg
Maximum value of SAR (measured) = 20.1 W/kg

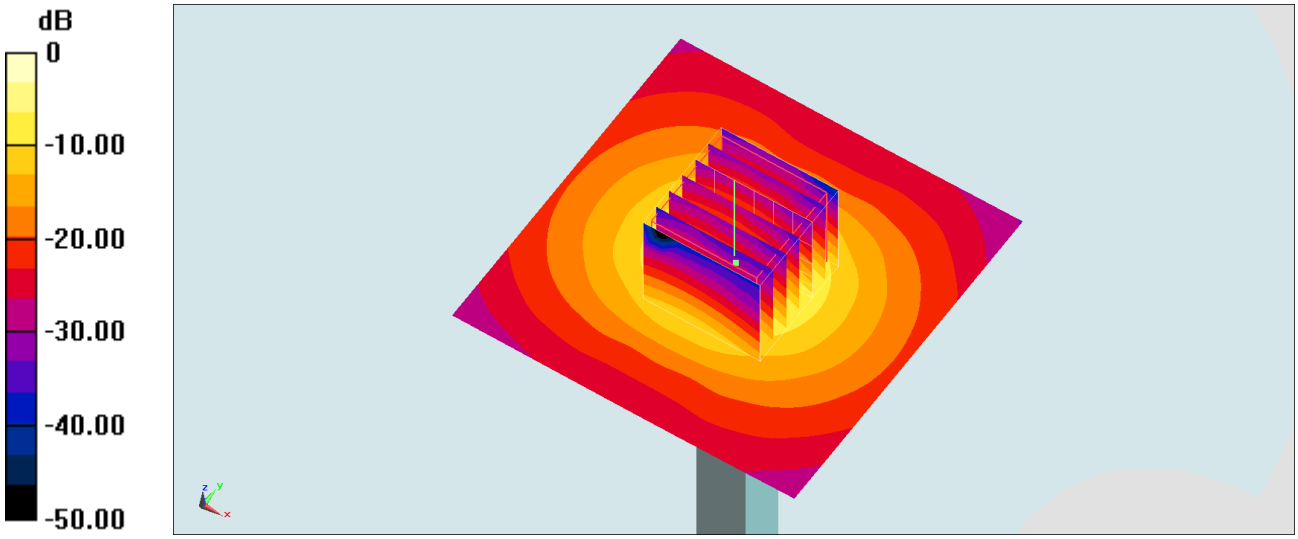

0 dB = 20.1 W/kg = 13.03 dBW/kg

System Check_Body_5250MHz

DUT: D5GHzV2-1006

Communication System: CW ; Frequency: 5250 MHz;Duty Cycle: 1:1
Medium: MSL_5G_180318 Medium parameters used: f = 5250 MHz; σ = 5.379 S/m; ε_r = 48.426; ρ = 1000 kg/m^3
Ambient Temperature：23.3 ℃; Liquid Temperature：22.3 ℃

DASY5 Configuration:
- Probe: EX3DV4 - SN3976; ConvF(4.92, 4.92, 4.92); Calibrated: 2018/1/23;
- Sensor-Surface: 1.4mm (Mechanical Surface Detection)
- Electronics: DAE3 Sn495; Calibrated: 2017/5/22
- Phantom: SAM-Left; Type: QD 000 P40 C; Serial: TP-1446
- Measurement SW: DASY52, Version 52.8 (8);SEMCAD X Version 14.6.10 (7373)

Pin=100mW/Area Scan (71x71x1): Interpolated grid: dx=1.000 mm, dy=1.000 mm
Maximum value of SAR (interpolated) = 19.5 W/kg

Pin=100mW/Zoom Scan (7x7x7)/Cube 0: Measurement grid: dx=4mm, dy=4mm, dz=1.4mm
Reference Value = 61.68 V/m; Power Drift = -0.08 dB
Peak SAR (extrapolated) = 33.2 W/kg
SAR(1 g) = 7.44 W/kg; SAR(10 g) = 2.02 W/kg
Maximum value of SAR (measured) = 18.7 W/kg

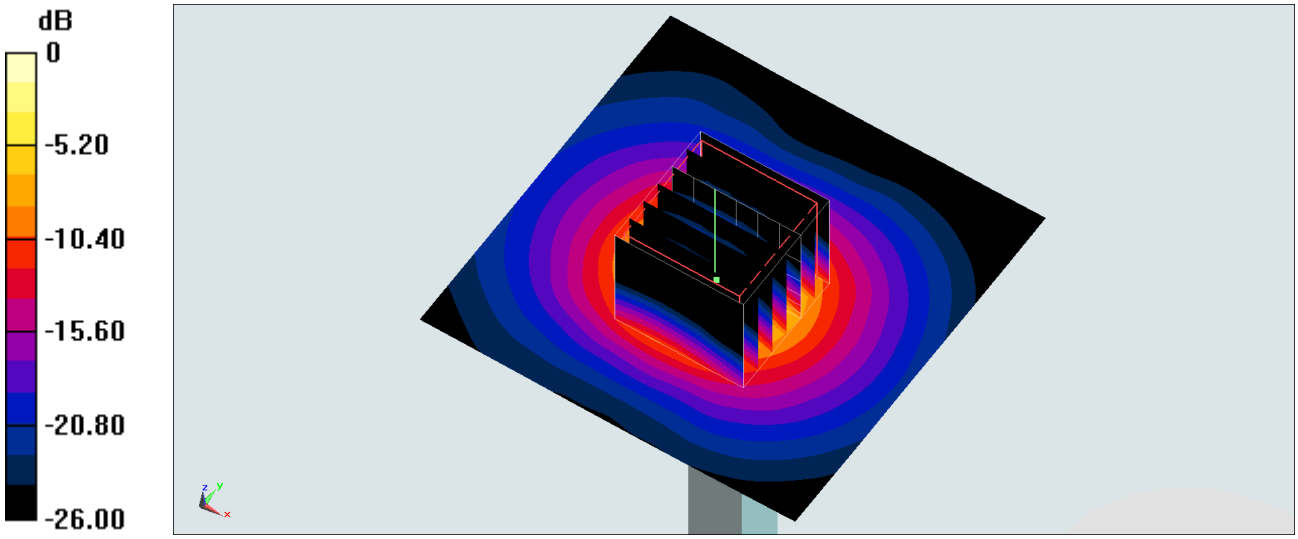

0 dB = 18.7 W/kg = 12.72 dBW/kg

System Check_Body_5250MHz

DUT: D5GHzV2-1006

Communication System: CW ; Frequency: 5250 MHz;Duty Cycle: 1:1
Medium: MSL_5G_180321 Medium parameters used: f = 5250 MHz; σ = 5.349 S/m; ε_r = 47.692; ρ = 1000 kg/m^3
Ambient Temperature：23.3 ℃; Liquid Temperature：22.3 ℃

DASY5 Configuration:
- Probe: EX3DV4 - SN3976; ConvF(4.92, 4.92, 4.92); Calibrated: 2018/1/23;
- Sensor-Surface: 1.4mm (Mechanical Surface Detection)
- Electronics: DAE3 Sn495; Calibrated: 2017/5/22
- Phantom: SAM-Left; Type: QD 000 P40 C; Serial: TP-1446
- Measurement SW: DASY52, Version 52.8 (8);SEMCAD X Version 14.6.10 (7373)

Pin=100mW/Area Scan (71x71x1): Interpolated grid: dx=1.000 mm, dy=1.000 mm
Maximum value of SAR (interpolated) = 19.4 W/kg

Pin=100mW/Zoom Scan (7x7x7)/Cube 0: Measurement grid: dx=4mm, dy=4mm, dz=1.4mm
Reference Value = 61.68 V/m; Power Drift = -0.08 dB
Peak SAR (extrapolated) = 33.0 W/kg
SAR(1 g) = 7.4 W/kg; SAR(10 g) = 2.01 W/kg
Maximum value of SAR (measured) = 18.6 W/kg

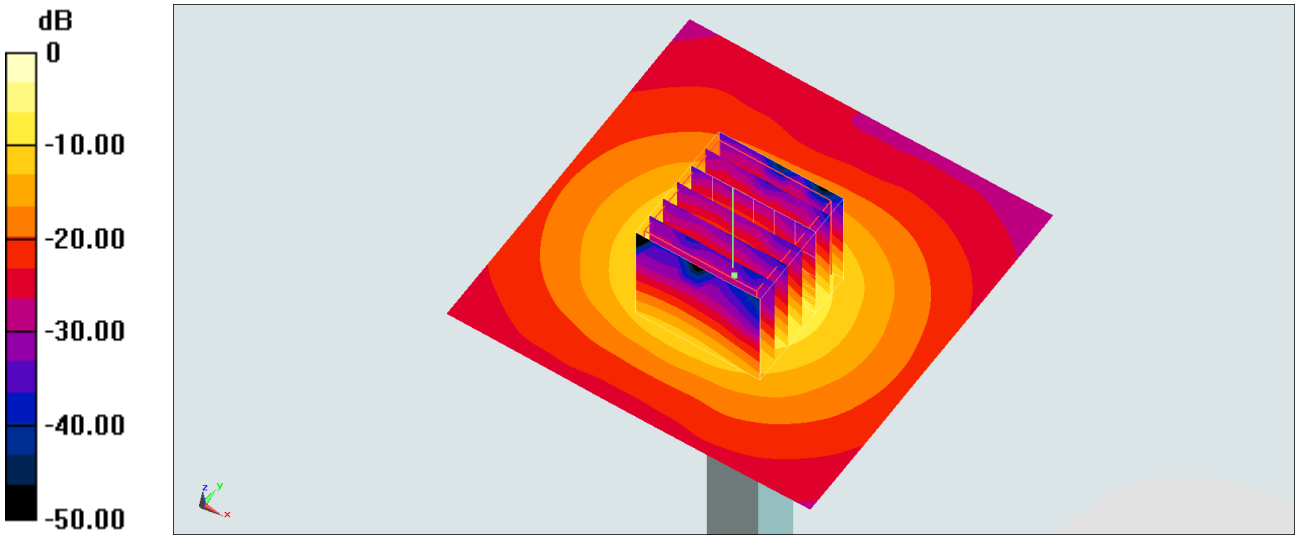

0 dB = 18.6 W/kg = 12.70 dBW/kg

System Check_Body_5250MHz

DUT: D5GHzV2-1006

Communication System: CW ; Frequency: 5250 MHz;Duty Cycle: 1:1
Medium: MSL_5G_180327 Medium parameters used: f = 5250 MHz; σ = 5.488 S/m; ε_r = 48.137; ρ = 1000 kg/m^3
Ambient Temperature：23.4 ℃; Liquid Temperature：22.4 ℃

DASY5 Configuration:
- Probe: EX3DV4 - SN3976; ConvF(4.92, 4.92, 4.92); Calibrated: 2018/1/23;
- Sensor-Surface: 1.4mm (Mechanical Surface Detection)
- Electronics: DAE3 Sn495; Calibrated: 2017/5/22
- Phantom: SAM_Right; Type: QD000P40CD; Serial: 1884
- Measurement SW: DASY52, Version 52.8 (8);SEMCAD X Version 14.6.10 (7373)

Pin=100mW/Area Scan (71x71x1): Interpolated grid: dx=1.000 mm, dy=1.000 mm
Maximum value of SAR (interpolated) = 19.9 W/kg

Pin=100mW/Zoom Scan (7x7x7)/Cube 0: Measurement grid: dx=4mm, dy=4mm, dz=1.4mm
Reference Value = 61.68 V/m; Power Drift = -0.08 dB
Peak SAR (extrapolated) = 33.9 W/kg
SAR(1 g) = 7.59 W/kg; SAR(10 g) = 2.07 W/kg
Maximum value of SAR (measured) = 19.1 W/kg

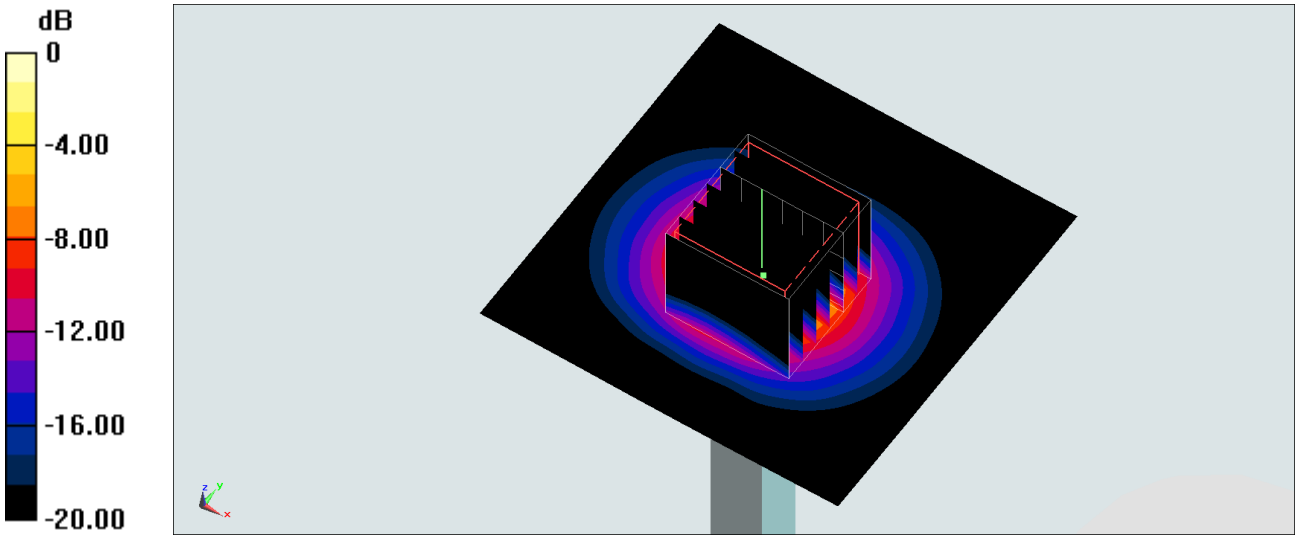

0 dB = 19.1 W/kg = 12.81 dBW/kg

System Check_Head_5600MHz

DUT: D5GHzV2-1006

Communication System: CW; Frequency: 5600 MHz;Duty Cycle: 1:1
Medium: HSL_5G_180314 Medium parameters used: f = 5600 MHz; σ = 4.884 S/m; ε_r = 35.439; ρ = 1000 kg/m^3
Ambient Temperature：23.5 ℃; Liquid Temperature：22.5 ℃

DASY5 Configuration:
- Probe: EX3DV4 - SN3976; ConvF(4.97, 4.97, 4.97); Calibrated: 2018/1/23;
- Sensor-Surface: 1.4mm (Mechanical Surface Detection)
- Electronics: DAE3 Sn495; Calibrated: 2017/5/22
- Phantom: SAM_Right; Type: QD000P40CD; Serial: 1884
- Measurement SW: DASY52, Version 52.8 (8);SEMCAD X Version 14.6.10 (7373)

Pin=100mW/Area Scan (71x71x1): Interpolated grid: dx=1.000 mm, dy=1.000 mm
Maximum value of SAR (interpolated) = 21.7 W/kg

Pin=100mW/Zoom Scan (7x7x7)/Cube 0: Measurement grid: dx=4mm, dy=4mm, dz=1.4mm
Reference Value = 75.03 V/m; Power Drift = 0.01 dB
Peak SAR (extrapolated) = 37.0 W/kg
SAR(1 g) = 8.63 W/kg; SAR(10 g) = 2.39 W/kg
Maximum value of SAR (measured) = 21.6 W/kg

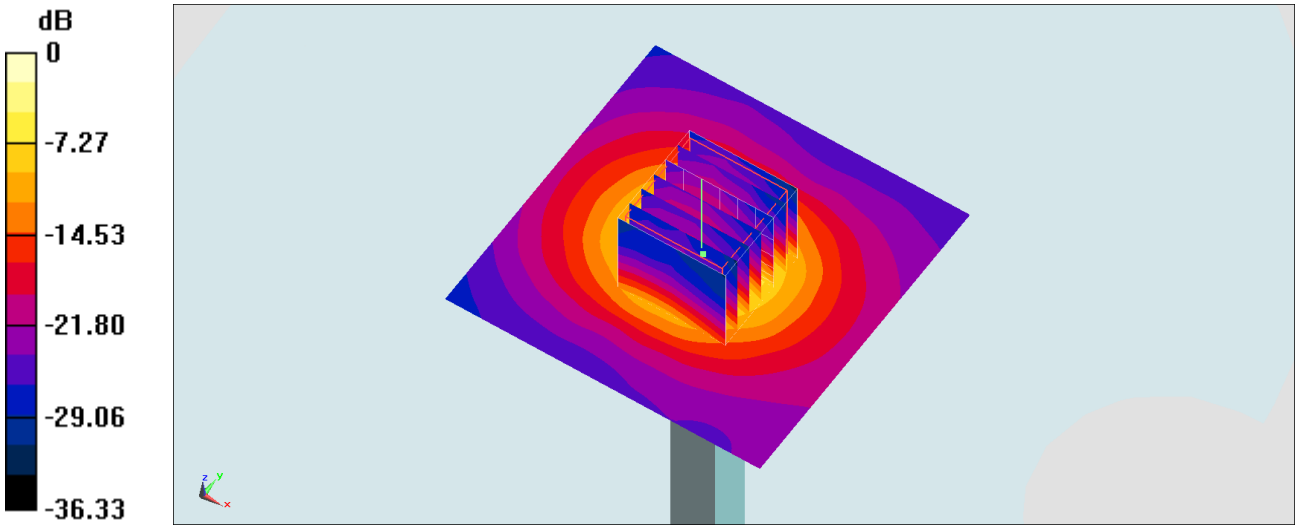

0 dB = 21.6 W/kg = 13.34 dBW/kg

System Check_Head_5600MHz

DUT: D5GHzV2-1006

Communication System: CW; Frequency: 5600 MHz;Duty Cycle: 1:1
Medium: HSL_5G_180318 Medium parameters used: f = 5600 MHz; σ = 5.013 S/m; ε_r = 36.13; ρ = 1000 kg/m^3
Ambient Temperature：23.3 ℃; Liquid Temperature：22.3 ℃

DASY5 Configuration:
- Probe: EX3DV4 - SN3976; ConvF(4.97, 4.97, 4.97); Calibrated: 2018/1/23;
- Sensor-Surface: 1.4mm (Mechanical Surface Detection)
- Electronics: DAE3 Sn495; Calibrated: 2017/5/22
- Phantom: SAM_Right; Type: QD000P40CD; Serial: 1884
- Measurement SW: DASY52, Version 52.8 (8);SEMCAD X Version 14.6.10 (7373)

Pin=100mW/Area Scan (71x71x1): Interpolated grid: dx=1.000 mm, dy=1.000 mm
Maximum value of SAR (interpolated) = 22.3 W/kg

Pin=100mW/Zoom Scan (7x7x7)/Cube 0: Measurement grid: dx=4mm, dy=4mm, dz=1.4mm
Reference Value = 75.03 V/m; Power Drift = 0.02 dB
Peak SAR (extrapolated) = 38.0 W/kg
SAR(1 g) = 8.86 W/kg; SAR(10 g) = 2.45 W/kg
Maximum value of SAR (measured) = 22.1 W/kg

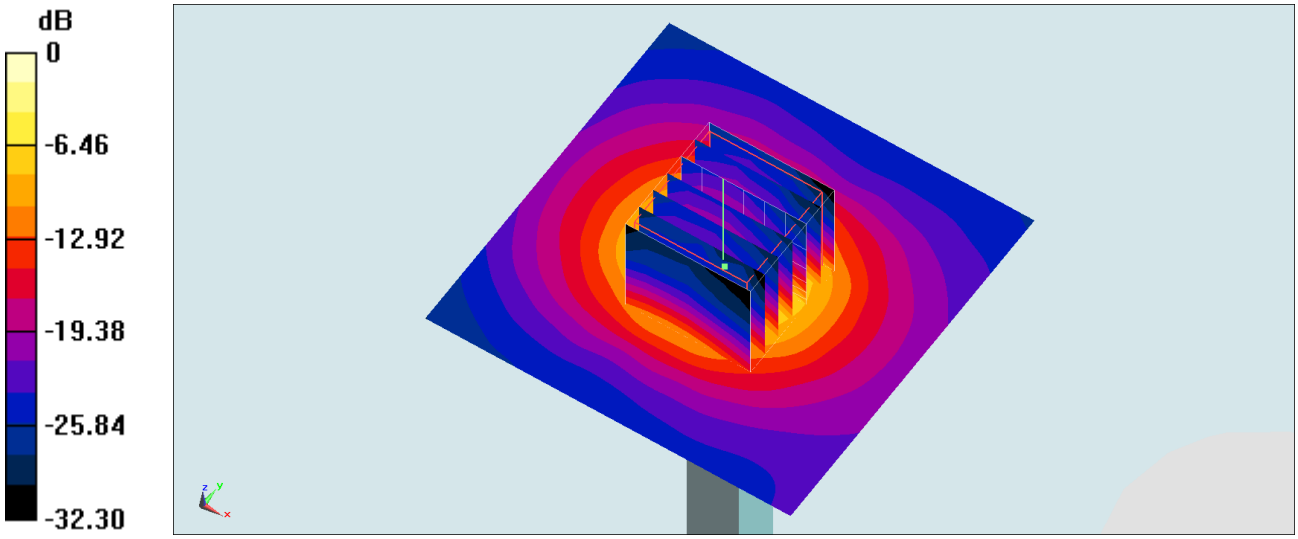

0 dB = 22.1 W/kg = 13.44 dBW/kg

System Check_Head_5600MHz

DUT: D5GHzV2-1006

Communication System: CW; Frequency: 5600 MHz;Duty Cycle: 1:1
Medium: HSL_5G_180327 Medium parameters used: f = 5600 MHz; σ = 5.032 S/m; ε_r = 35.608; ρ = 1000 kg/m^3
Ambient Temperature：23.4 ℃; Liquid Temperature：22.4 ℃

DASY5 Configuration:
- Probe: EX3DV4 - SN3976; ConvF(4.97, 4.97, 4.97); Calibrated: 2018/1/23;
- Sensor-Surface: 1.4mm (Mechanical Surface Detection)
- Electronics: DAE3 Sn495; Calibrated: 2017/5/22
- Phantom: SAM-Left; Type: QD 000 P40 C; Serial: TP-1446
- Measurement SW: DASY52, Version 52.8 (8);SEMCAD X Version 14.6.10 (7373)

Pin=100mW/Area Scan (71x71x1): Interpolated grid: dx=1.000 mm, dy=1.000 mm
Maximum value of SAR (interpolated) = 22.5 W/kg

Pin=100mW/Zoom Scan (7x7x7)/Cube 0: Measurement grid: dx=4mm, dy=4mm, dz=1.4mm
Reference Value = 75.03 V/m; Power Drift = 0.05 dB
Peak SAR (extrapolated) = 39.6 W/kg
SAR(1 g) = 8.95 W/kg; SAR(10 g) = 2.41 W/kg
Maximum value of SAR (measured) = 22.8 W/kg

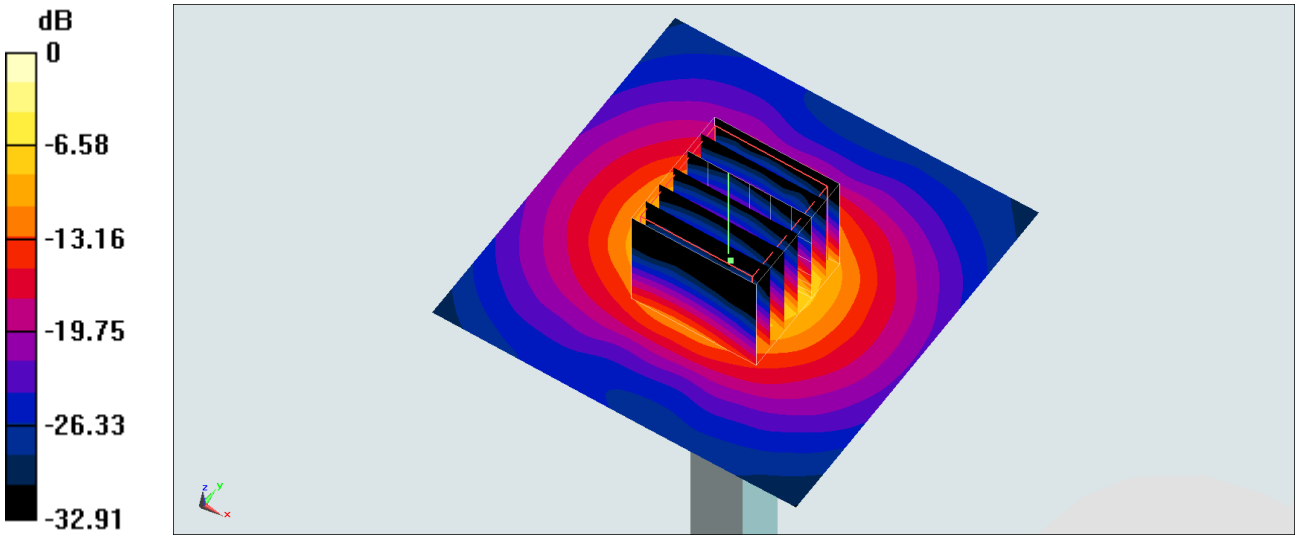

0 dB = 22.8 W/kg = 13.58 dBW/kg

System Check_Head_5600MHz

DUT: D5GHzV2-1171

Communication System: CW; Frequency: 5600 MHz;Duty Cycle: 1:1
Medium: HSL_5G_180411 Medium parameters used: f = 5600 MHz; σ = 4.939 S/m; ε_r = 36.719; ρ = 1000 kg/m^3
Ambient Temperature：23.3 ℃; Liquid Temperature：22.3 ℃

DASY5 Configuration:
- Probe: EX3DV4 - SN3925; ConvF(4.72, 4.72, 4.72); Calibrated: 2017/5/24;
- Sensor-Surface: 1.4mm (Mechanical Surface Detection)
- Electronics: DAE4 Sn1424; Calibrated: 2018/1/18
- Phantom: SAM_Right; Type: QD000P40CD; Serial: 1719
- Measurement SW: DASY52, Version 52.10 (0);SEMCAD X Version 14.6.10 (7417)

Pin=100mW/Area Scan (71x71x1): Interpolated grid: dx=1.000 mm, dy=1.000 mm
Maximum value of SAR (interpolated) = 20.7 W/kg

Pin=100mW/Zoom Scan (7x7x7)/Cube 0: Measurement grid: dx=4mm, dy=4mm, dz=1.4mm
Reference Value = 71.96 V/m; Power Drift = 0.12 dB
Peak SAR (extrapolated) = 38.2 W/kg
SAR(1 g) = 8.52 W/kg; SAR(10 g) = 2.29 W/kg
Maximum value of SAR (measured) = 22.0 W/kg

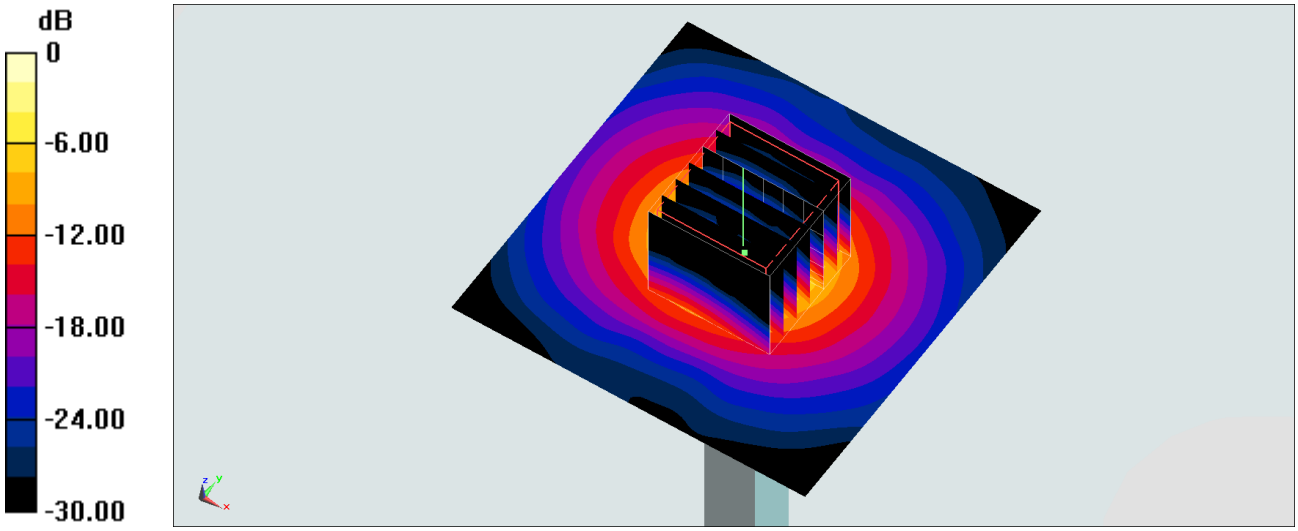

0 dB = 22.0 W/kg = 13.42 dBW/kg

System Check_Head_5600MHz

DUT: D5GHzV2-1171

Communication System: CW; Frequency: 5600 MHz;Duty Cycle: 1:1
Medium: HSL_5G_180412 Medium parameters used: f = 5600 MHz; σ = 4.913 S/m; ε_r = 36.596; ρ = 1000 kg/m^3
Ambient Temperature：23.3 ℃; Liquid Temperature：22.3 ℃

DASY5 Configuration:
- Probe: EX3DV4 - SN3925; ConvF(4.72, 4.72, 4.72); Calibrated: 2017/5/24;
- Sensor-Surface: 1.4mm (Mechanical Surface Detection)
- Electronics: DAE4 Sn1424; Calibrated: 2018/1/18
- Phantom: SAM_Right; Type: QD000P40CD; Serial: 1719
- Measurement SW: DASY52, Version 52.10 (0);SEMCAD X Version 14.6.10 (7417)

Pin=100mW/Area Scan (71x71x1): Interpolated grid: dx=1.000 mm, dy=1.000 mm
Maximum value of SAR (interpolated) = 20.6 W/kg

Pin=100mW/Zoom Scan (7x7x7)/Cube 0: Measurement grid: dx=4mm, dy=4mm, dz=1.4mm
Reference Value = 71.96 V/m; Power Drift = 0.11 dB
Peak SAR (extrapolated) = 38.0 W/kg
SAR(1 g) = 8.48 W/kg; SAR(10 g) = 2.27 W/kg
Maximum value of SAR (measured) = 21.9 W/kg

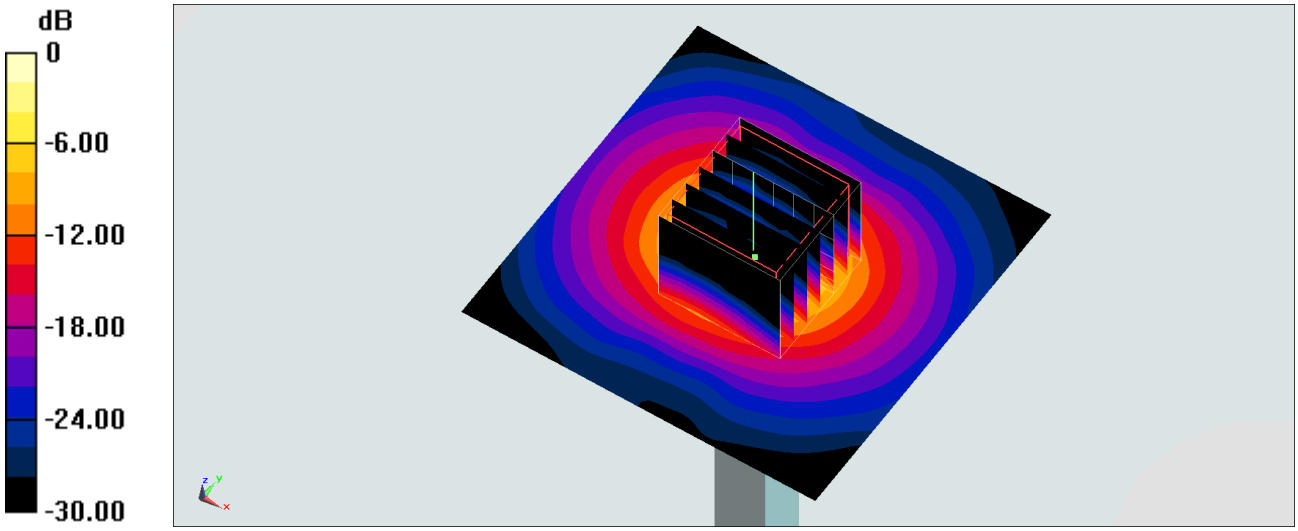

0 dB = 21.9 W/kg = 13.40 dBW/kg

System Check_Body_5600MHz

DUT: D5GHzV2-1006

Communication System: CW ; Frequency: 5600 MHz;Duty Cycle: 1:1
Medium: MSL_5G_180318 Medium parameters used: f = 5600 MHz; σ = 5.832 S/m; ε_r = 47.837; ρ = 1000 kg/m^3
Ambient Temperature：23.3 ℃; Liquid Temperature：22.3 ℃

DASY5 Configuration:
- Probe: EX3DV4 - SN3976; ConvF(4.28, 4.28, 4.28); Calibrated: 2018/1/23;
- Sensor-Surface: 1.4mm (Mechanical Surface Detection)
- Electronics: DAE3 Sn495; Calibrated: 2017/5/22
- Phantom: SAM-Left; Type: QD 000 P40 C; Serial: TP-1446
- Measurement SW: DASY52, Version 52.8 (8);SEMCAD X Version 14.6.10 (7373)

Pin=100mW/Area Scan (71x71x1): Interpolated grid: dx=1.000 mm, dy=1.000 mm
Maximum value of SAR (interpolated) = 20.8 W/kg

Pin=100mW/Zoom Scan (7x7x7)/Cube 0: Measurement grid: dx=4mm, dy=4mm, dz=1.4mm
Reference Value = 62.47 V/m; Power Drift = -0.02 dB
Peak SAR (extrapolated) = 37.5 W/kg
SAR(1 g) = 7.82 W/kg; SAR(10 g) = 2.11 W/kg
Maximum value of SAR (measured) = 20.3 W/kg

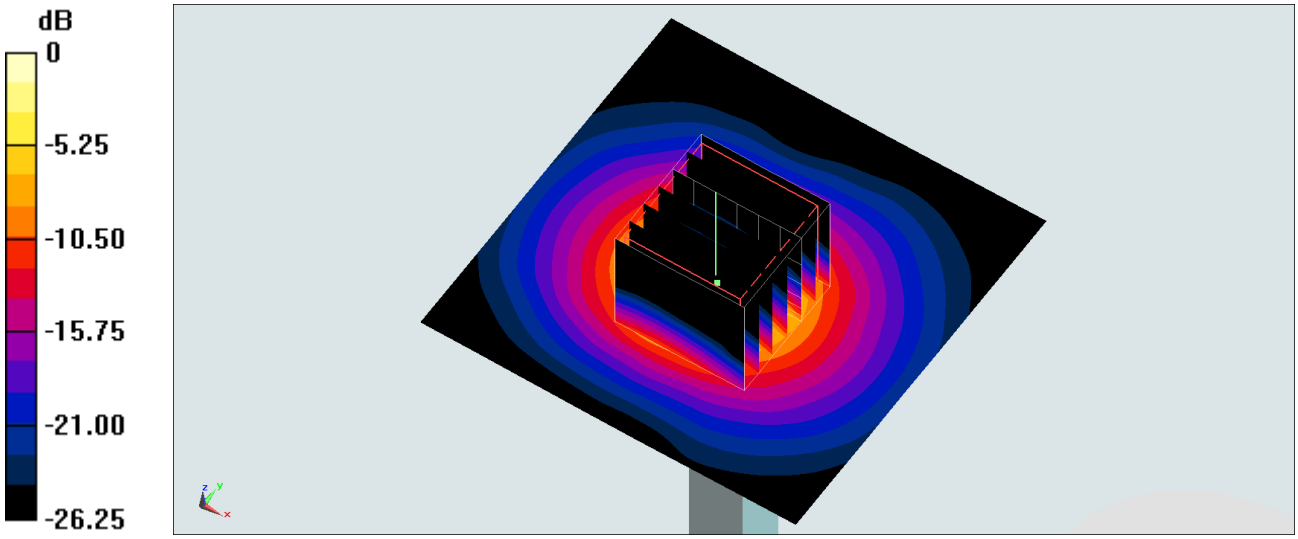

0 dB = 20.3 W/kg = 13.07 dBW/kg

System Check_Body_5600MHz

DUT: D5GHzV2-1006

Communication System: CW ; Frequency: 5600 MHz;Duty Cycle: 1:1
Medium: MSL_5G_180321 Medium parameters used: f = 5600 MHz; σ = 5.793 S/m; ε_r = 47.101; ρ = 1000 kg/m^3
Ambient Temperature：23.3 ℃; Liquid Temperature：22.3 ℃

DASY5 Configuration:
- Probe: EX3DV4 - SN3976; ConvF(4.28, 4.28, 4.28); Calibrated: 2018/1/23;
- Sensor-Surface: 1.4mm (Mechanical Surface Detection)
- Electronics: DAE3 Sn495; Calibrated: 2017/5/22
- Phantom: SAM-Left; Type: QD 000 P40 C; Serial: TP-1446
- Measurement SW: DASY52, Version 52.8 (8);SEMCAD X Version 14.6.10 (7373)

Pin=100mW/Area Scan (71x71x1): Interpolated grid: dx=1.000 mm, dy=1.000 mm
Maximum value of SAR (interpolated) = 20.6 W/kg

Pin=100mW/Zoom Scan (7x7x7)/Cube 0: Measurement grid: dx=4mm, dy=4mm, dz=1.4mm
Reference Value = 62.47 V/m; Power Drift = -0.02 dB
Peak SAR (extrapolated) = 37.3 W/kg
SAR(1 g) = 7.77 W/kg; SAR(10 g) = 2.09 W/kg
Maximum value of SAR (measured) = 20.2 W/kg

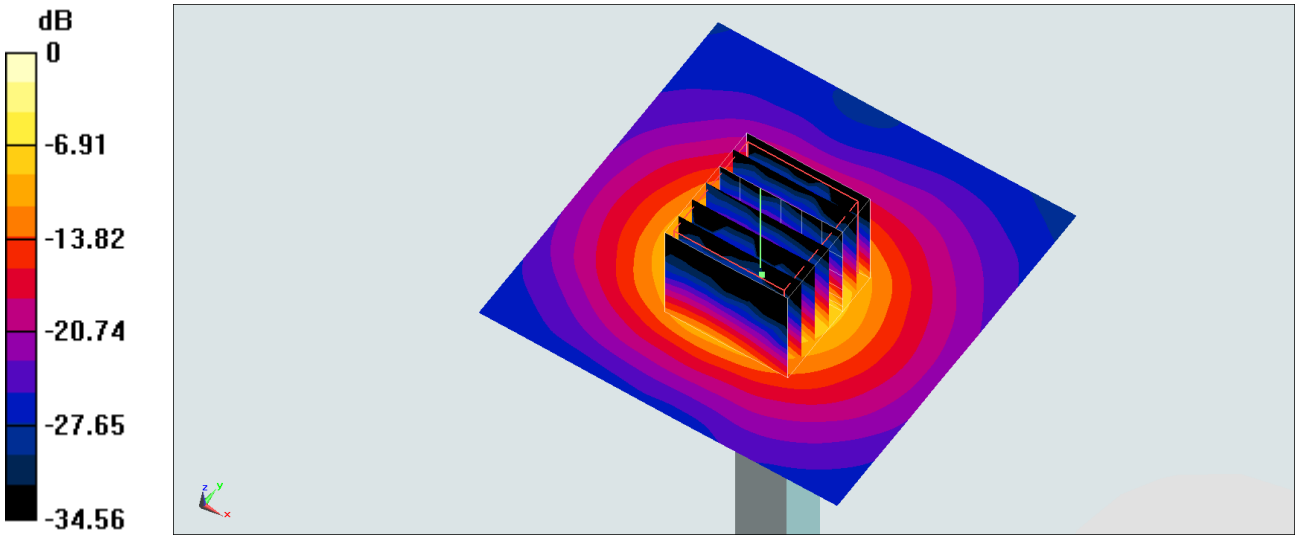

0 dB = 20.2 W/kg = 13.05 dBW/kg

System Check_Body_5600MHz

DUT: D5GHzV2-1006

Communication System: CW ; Frequency: 5600 MHz;Duty Cycle: 1:1
Medium: MSL_5G_180327 Medium parameters used: f = 5600 MHz; σ = 5.959 S/m; ε_r = 47.543; ρ = 1000 kg/m^3
Ambient Temperature：23.4 ℃; Liquid Temperature：22.4 ℃

DASY5 Configuration:
- Probe: EX3DV4 - SN3976; ConvF(4.28, 4.28, 4.28); Calibrated: 2018/1/23;
- Sensor-Surface: 1.4mm (Mechanical Surface Detection)
- Electronics: DAE3 Sn495; Calibrated: 2017/5/22
- Phantom: SAM_Right; Type: QD000P40CD; Serial: 1884
- Measurement SW: DASY52, Version 52.8 (8);SEMCAD X Version 14.6.10 (7373)

Pin=100mW/Area Scan (71x71x1): Interpolated grid: dx=1.000 mm, dy=1.000 mm
Maximum value of SAR (interpolated) = 21.2 W/kg

Pin=100mW/Zoom Scan (7x7x7)/Cube 0: Measurement grid: dx=4mm, dy=4mm, dz=1.4mm
Reference Value = 62.47 V/m; Power Drift = -0.02 dB
Peak SAR (extrapolated) = 38.3 W/kg
SAR(1 g) = 7.99 W/kg; SAR(10 g) = 2.15 W/kg
Maximum value of SAR (measured) = 20.8 W/kg

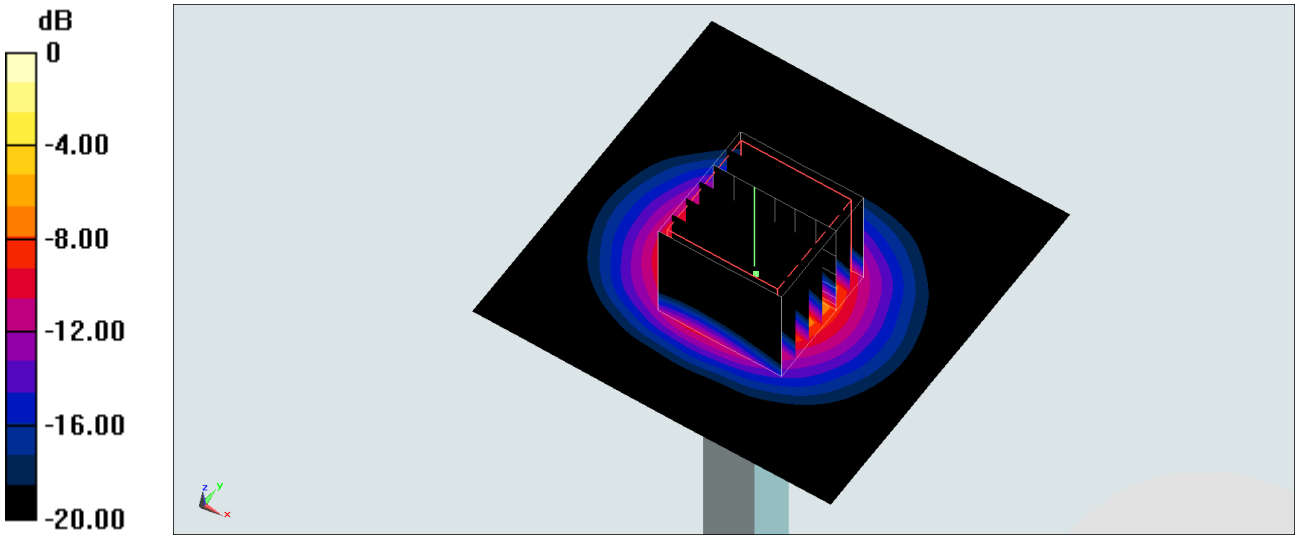

0 dB = 20.8 W/kg = 13.18 dBW/kg

System Check_Head_5750MHz

DUT: D5GHzV2-1006

Communication System: CW; Frequency: 5750 MHz;Duty Cycle: 1:1
Medium: HSL_5G_180314 Medium parameters used: f = 5750 MHz; σ = 5.034 S/m; ε_r = 35.223; ρ = 1000 kg/m^3
Ambient Temperature：23.5 ℃; Liquid Temperature：22.5 ℃

DASY5 Configuration:
- Probe: EX3DV4 - SN3976; ConvF(5.04, 5.04, 5.04); Calibrated: 2018/1/23;
- Sensor-Surface: 1.4mm (Mechanical Surface Detection)
- Electronics: DAE3 Sn495; Calibrated: 2017/5/22
- Phantom: SAM_Right; Type: QD000P40CD; Serial: 1884
- Measurement SW: DASY52, Version 52.8 (8);SEMCAD X Version 14.6.10 (7373)

Pin=100mW/Area Scan (71x71x1): Interpolated grid: dx=1.000 mm, dy=1.000 mm
Maximum value of SAR (interpolated) = 21.0 W/kg

Pin=100mW/Zoom Scan (7x7x7)/Cube 0: Measurement grid: dx=4mm, dy=4mm, dz=1.4mm
Reference Value = 69.84 V/m; Power Drift = -0.06 dB
Peak SAR (extrapolated) = 32.8 W/kg
SAR(1 g) = 7.82 W/kg; SAR(10 g) = 2.15 W/kg
Maximum value of SAR (measured) = 19.6 W/kg

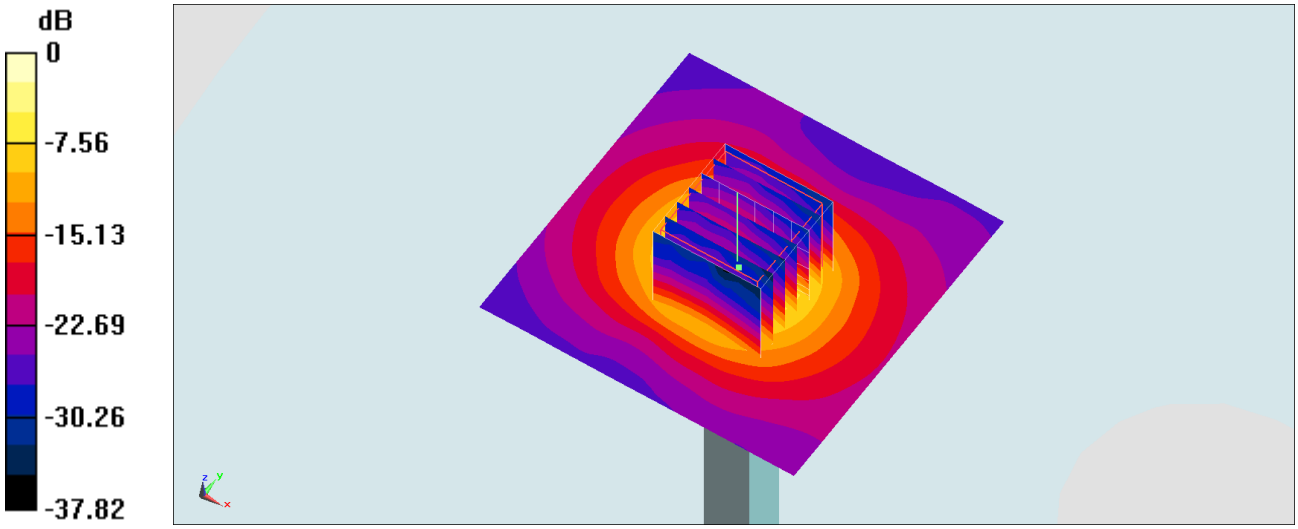

0 dB = 19.6 W/kg = 12.92 dBW/kg

System Check_Head_5750MHz

DUT: D5GHzV2-1006

Communication System: CW; Frequency: 5750 MHz;Duty Cycle: 1:1
Medium: HSL_5G_180318 Medium parameters used: f = 5750 MHz; σ = 5.168 S/m; ε_r = 35.946; ρ = 1000 kg/m^3
Ambient Temperature：23.3 ℃; Liquid Temperature：22.3 ℃

DASY5 Configuration:
- Probe: EX3DV4 - SN3976; ConvF(5.04, 5.04, 5.04); Calibrated: 2018/1/23;
- Sensor-Surface: 1.4mm (Mechanical Surface Detection)
- Electronics: DAE3 Sn495; Calibrated: 2017/5/22
- Phantom: SAM_Right; Type: QD000P40CD; Serial: 1884
- Measurement SW: DASY52, Version 52.8 (8);SEMCAD X Version 14.6.10 (7373)

Pin=100mW/Area Scan (71x71x1): Interpolated grid: dx=1.000 mm, dy=1.000 mm
Maximum value of SAR (interpolated) = 21.6 W/kg

Pin=100mW/Zoom Scan (7x7x7)/Cube 0: Measurement grid: dx=4mm, dy=4mm, dz=1.4mm
Reference Value = 69.84 V/m; Power Drift = -0.03 dB
Peak SAR (extrapolated) = 33.7 W/kg
SAR(1 g) = 8.03 W/kg; SAR(10 g) = 2.21 W/kg
Maximum value of SAR (measured) = 20.1 W/kg

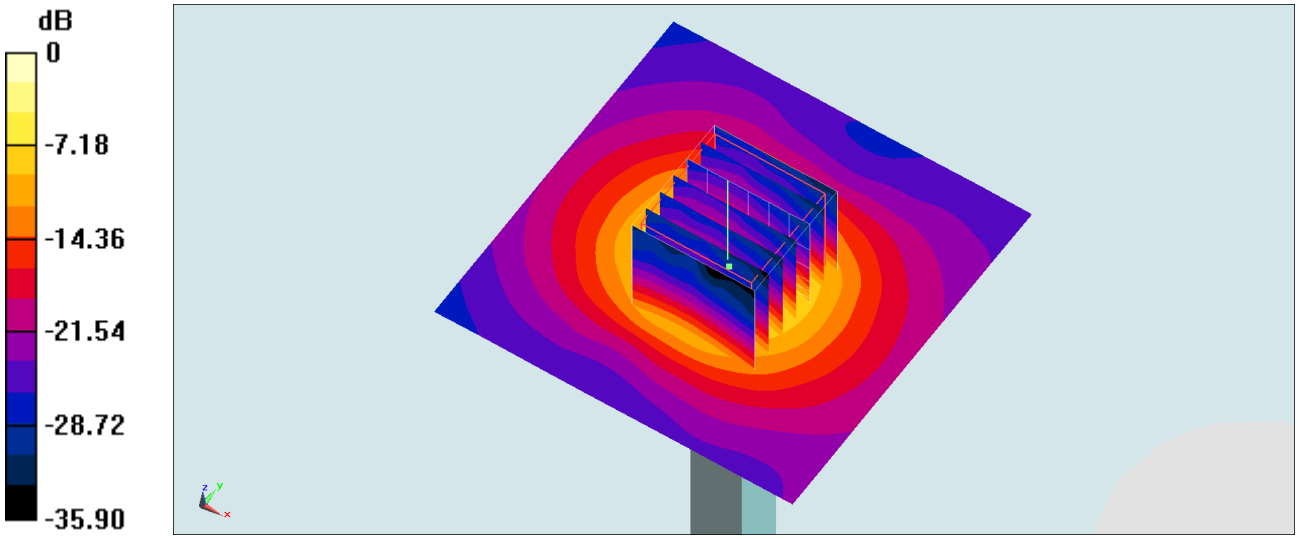

0 dB = 20.1 W/kg = 13.03 dBW/kg

System Check_Head_5750MHz

DUT: D5GHzV2-1006

Communication System: CW; Frequency: 5750 MHz;Duty Cycle: 1:1
Medium: HSL_5G_180327 Medium parameters used: f = 5750 MHz; σ = 5.182 S/m; ε_r = 35.402; ρ = 1000 kg/m^3
Ambient Temperature：23.4 ℃; Liquid Temperature：22.4 ℃

DASY5 Configuration:
- Probe: EX3DV4 - SN3976; ConvF(5.04, 5.04, 5.04); Calibrated: 2018/1/23;
- Sensor-Surface: 1.4mm (Mechanical Surface Detection)
- Electronics: DAE3 Sn495; Calibrated: 2017/5/22
- Phantom: SAM-Left; Type: QD 000 P40 C; Serial: TP-1446
- Measurement SW: DASY52, Version 52.8 (8);SEMCAD X Version 14.6.10 (7373)

Pin=100mW/Area Scan (71x71x1): Interpolated grid: dx=1.000 mm, dy=1.000 mm
Maximum value of SAR (interpolated) = 20.6 W/kg

Pin=100mW/Zoom Scan (7x7x7)/Cube 0: Measurement grid: dx=4mm, dy=4mm, dz=1.4mm
Reference Value = 71.05 V/m; Power Drift = -0.01 dB
Peak SAR (extrapolated) = 37.5 W/kg
SAR(1 g) = 8.15 W/kg; SAR(10 g) = 2.2 W/kg
Maximum value of SAR (measured) = 20.9 W/kg

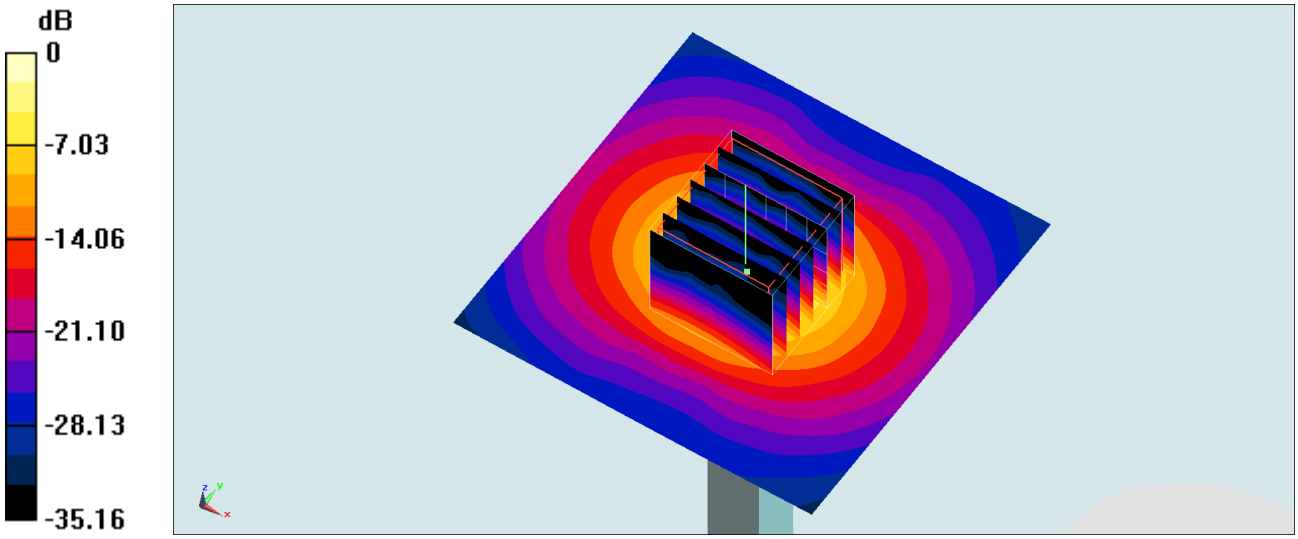

0 dB = 20.9 W/kg = 13.20 dBW/kg

System Check_Body_5750MHz

DUT: D5GHzV2-1006

Communication System: CW ; Frequency: 5750 MHz;Duty Cycle: 1:1
Medium: MSL_5G_180318 Medium parameters used: f = 5750 MHz; σ = 6.039 S/m; ε_r = 47.6; ρ = 1000 kg/m^3
Ambient Temperature：23.3 ℃; Liquid Temperature：22.3 ℃

DASY5 Configuration:
- Probe: EX3DV4 - SN3976; ConvF(4.46, 4.46, 4.46); Calibrated: 2018/1/23;
- Sensor-Surface: 1.4mm (Mechanical Surface Detection)
- Electronics: DAE3 Sn495; Calibrated: 2017/5/22
- Phantom: SAM-Left; Type: QD 000 P40 C; Serial: TP-1446
- Measurement SW: DASY52, Version 52.8 (8);SEMCAD X Version 14.6.10 (7373)

Pin=100mW/Area Scan (71x71x1): Interpolated grid: dx=1.000 mm, dy=1.000 mm
Maximum value of SAR (interpolated) = 18.9 W/kg

Pin=100mW/Zoom Scan (7x7x7)/Cube 0: Measurement grid: dx=4mm, dy=4mm, dz=1.4mm
Reference Value = 60.87 V/m; Power Drift = -0.01 dB
Peak SAR (extrapolated) = 37.9 W/kg
SAR(1 g) = 7.37 W/kg; SAR(10 g) = 1.98 W/kg
Maximum value of SAR (measured) = 18.9 W/kg

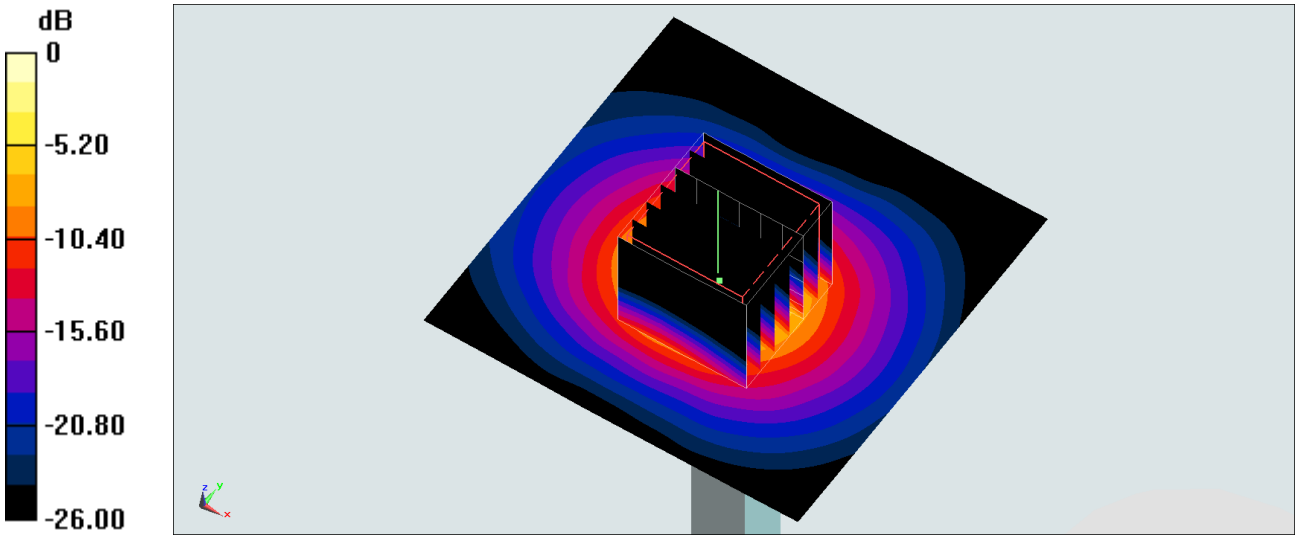

0 dB = 18.9 W/kg = 12.76 dBW/kg

System Check_Body_5750MHz

DUT: D5GHzV2-1006

Communication System: CW ; Frequency: 5750 MHz;Duty Cycle: 1:1
Medium: MSL_5G_180321 Medium parameters used: f = 5750 MHz; σ = 5.995 S/m; ε_r = 46.834; ρ = 1000 kg/m^3
Ambient Temperature：23.3 ℃; Liquid Temperature：22.3 ℃

DASY5 Configuration:
- Probe: EX3DV4 - SN3976; ConvF(4.46, 4.46, 4.46); Calibrated: 2018/1/23;
- Sensor-Surface: 1.4mm (Mechanical Surface Detection)
- Electronics: DAE3 Sn495; Calibrated: 2017/5/22
- Phantom: SAM-Left; Type: QD 000 P40 C; Serial: TP-1446
- Measurement SW: DASY52, Version 52.8 (8);SEMCAD X Version 14.6.10 (7373)

Pin=100mW/Area Scan (71x71x1): Interpolated grid: dx=1.000 mm, dy=1.000 mm
Maximum value of SAR (interpolated) = 18.8 W/kg

Pin=100mW/Zoom Scan (7x7x7)/Cube 0: Measurement grid: dx=4mm, dy=4mm, dz=1.4mm
Reference Value = 60.87 V/m; Power Drift = -0.01 dB
Peak SAR (extrapolated) = 37.6 W/kg
SAR(1 g) = 7.32 W/kg; SAR(10 g) = 1.97 W/kg
Maximum value of SAR (measured) = 18.7 W/kg

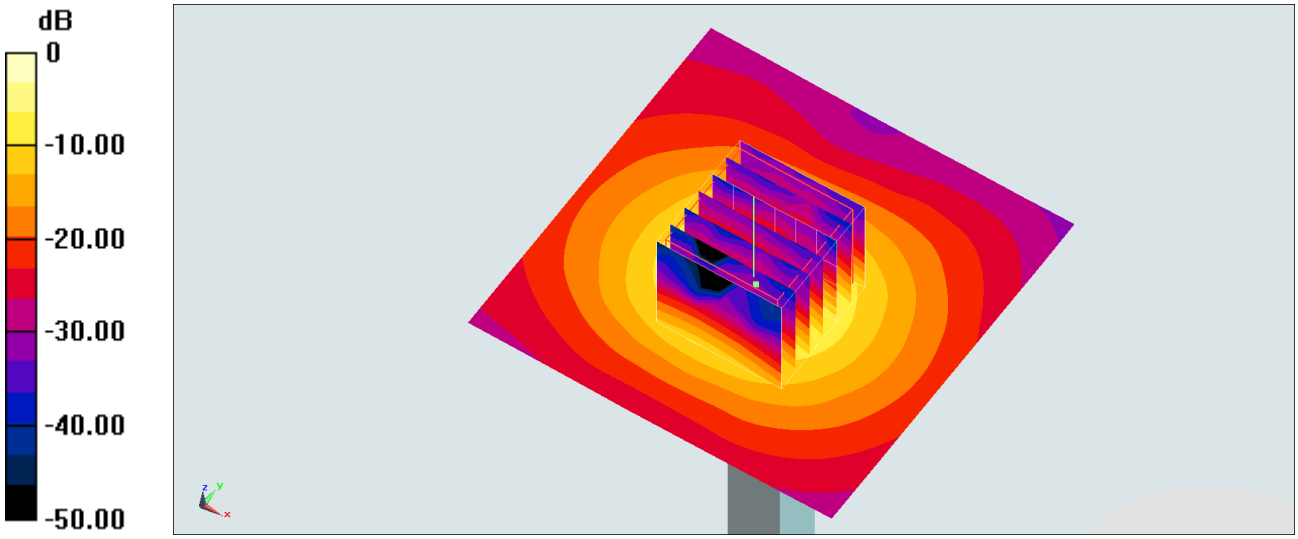

0 dB = 18.7 W/kg = 12.72 dBW/kg

System Check_Body_5750MHz

DUT: D5GHzV2-1006

Communication System: CW ; Frequency: 5750 MHz;Duty Cycle: 1:1
Medium: MSL_5G_180327 Medium parameters used: f = 5750 MHz; σ = 6.17 S/m; ε_r = 47.299; ρ = 1000 kg/m^3
Ambient Temperature：23.4 ℃; Liquid Temperature：22.4 ℃

DASY5 Configuration:
- Probe: EX3DV4 - SN3976; ConvF(4.46, 4.46, 4.46); Calibrated: 2018/1/23;
- Sensor-Surface: 1.4mm (Mechanical Surface Detection)
- Electronics: DAE3 Sn495; Calibrated: 2017/5/22
- Phantom: SAM_Right; Type: QD000P40CD; Serial: 1884
- Measurement SW: DASY52, Version 52.8 (8);SEMCAD X Version 14.6.10 (7373)

Pin=100mW/Area Scan (71x71x1): Interpolated grid: dx=1.000 mm, dy=1.000 mm
Maximum value of SAR (interpolated) = 19.3 W/kg

Pin=100mW/Zoom Scan (7x7x7)/Cube 0: Measurement grid: dx=4mm, dy=4mm, dz=1.4mm
Reference Value = 60.87 V/m; Power Drift = -0.01 dB
Peak SAR (extrapolated) = 38.7 W/kg
SAR(1 g) = 7.53 W/kg; SAR(10 g) = 2.02 W/kg
Maximum value of SAR (measured) = 19.3 W/kg

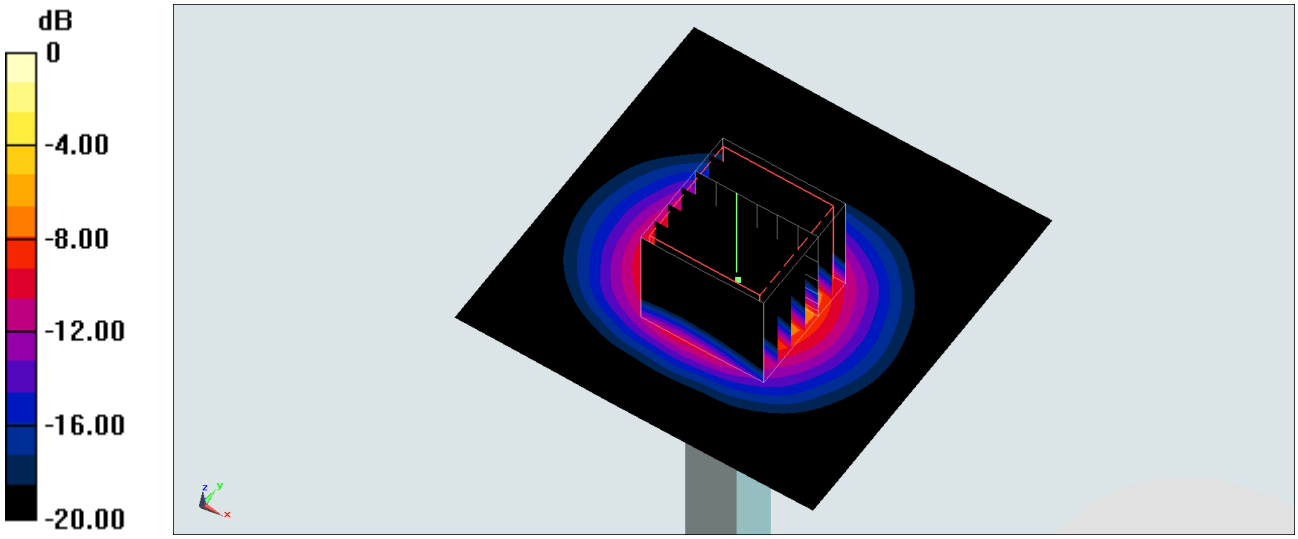

0 dB = 19.3 W/kg = 12.86 dBW/kg