System Check_Head_750MHz

DUT: D750V3-1012

Communication System: CW; Frequency: 750 MHz;Duty Cycle: 1:1
Medium: HSL_750_190214 Medium parameters used: f = 750 MHz; σ = 0.898 S/m; ε_r = 43.469; ρ = 1000 kg/m^3
Ambient Temperature：23.6 ℃; Liquid Temperature：22.6 ℃

DASY5 Configuration:
- Probe: EX3DV4 - SN7306;ConvF(10.19, 10.19, 10.19) ;Calibrated: 2018/7/26
- Sensor-Surface: 1.4mm (Mechanical Surface Detection)
- Electronics: DAE3 Sn495; Calibrated: 2018/5/24
- Phantom: SAM_Right; Type: QD000P40CD; Serial: 1884
- Measurement SW: DASY52, Version 52.10 (1);SEMCAD X Version 14.6.11 (7439)

Pin=250mW/Area Scan (61x61x1): Interpolated grid: dx=1.500 mm, dy=1.500 mm
Maximum value of SAR (interpolated) = 2.86 W/kg

Pin=250mW/Zoom Scan (5x5x7)/Cube 0: Measurement grid: dx=8mm, dy=8mm, dz=5mm
Reference Value = 58.08 V/m; Power Drift = 0.06 dB
Peak SAR (extrapolated) = 3.23 W/kg
SAR(1 g) = 2.18 W/kg; SAR(10 g) = 1.47 W/kg
Maximum value of SAR (measured) = 2.87 W/kg

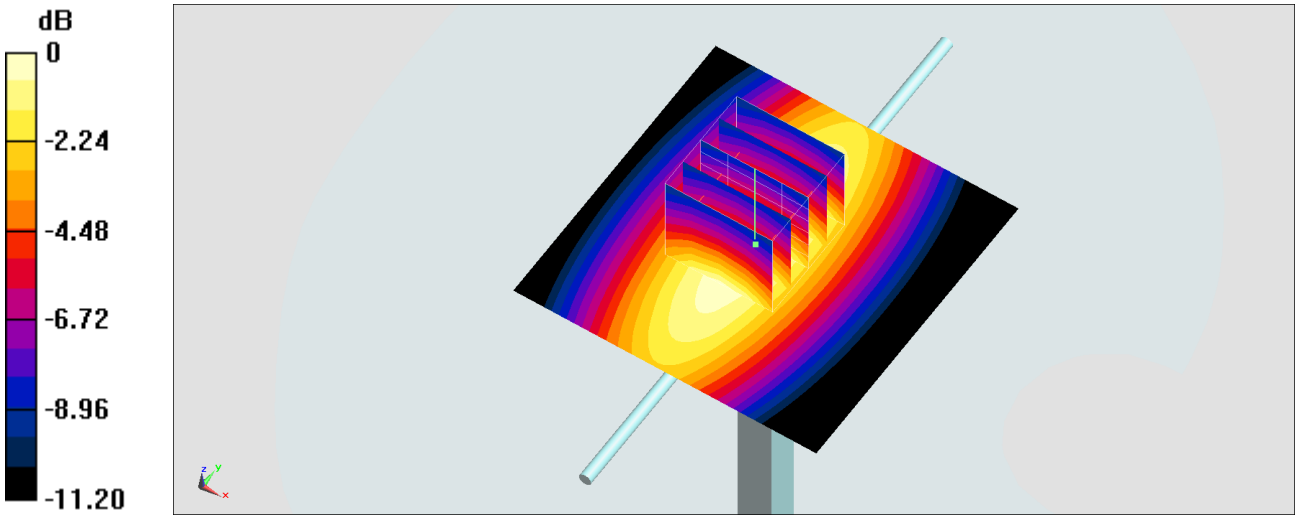

0 dB = 2.87 W/kg = 4.58 dBW/kg

System Check_Head_835MHz

DUT: D835V2-499

Communication System: CW; Frequency: 835 MHz;Duty Cycle: 1:1
Medium: HSL_850_190214 Medium parameters used: f = 835 MHz; σ = 0.893 S/m; ε_r = 40.727; ρ = 1000 kg/m^3
Ambient Temperature：23.6 ℃; Liquid Temperature：22.6 ℃

DASY5 Configuration:
- Probe: EX3DV4 - SN7306;ConvF(9.96, 9.96, 9.96) ;Calibrated: 2018/7/26
- Sensor-Surface: 1.4mm (Mechanical Surface Detection)
- Electronics: DAE3 Sn495; Calibrated: 2018/5/24
- Phantom: SAM_Right; Type: QD000P40CD; Serial: 1884
- Measurement SW: DASY52, Version 52.10 (1);SEMCAD X Version 14.6.11 (7439)

Pin=250mW/Area Scan (61x61x1): Interpolated grid: dx=1.500 mm, dy=1.500 mm
Maximum value of SAR (interpolated) = 3.28 W/kg

Pin=250mW/Zoom Scan (5x5x7)/Cube 0: Measurement grid: dx=8mm, dy=8mm, dz=5mm
Reference Value = 63.67 V/m; Power Drift = -0.08 dB
Peak SAR (extrapolated) = 3.70 W/kg
SAR(1 g) = 2.44 W/kg; SAR(10 g) = 1.61 W/kg
Maximum value of SAR (measured) = 3.27 W/kg

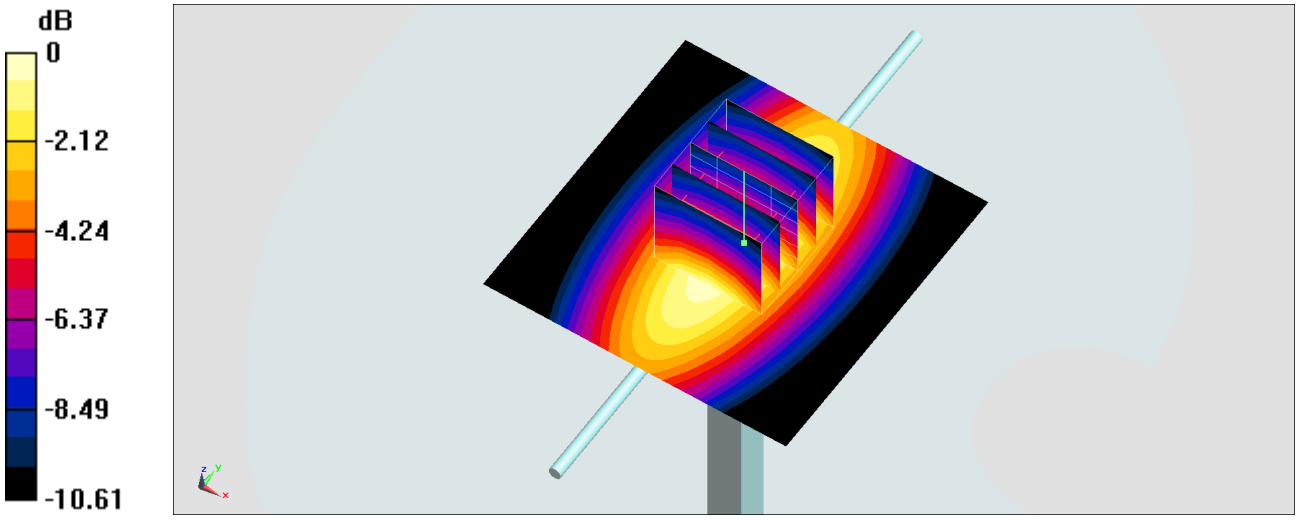

0 dB = 3.27 W/kg = 5.15 dBW/kg

System Check_Head_1750MHz

DUT: D1750V2-1068

Communication System: CW; Frequency: 1750 MHz;Duty Cycle: 1:1
Medium: HSL_1750_190212 Medium parameters used: f = 1750 MHz; σ = 1.382 S/m; ε_r = 40.546; ρ = 1000 kg/m^3
Ambient Temperature：23.5 ℃; Liquid Temperature：22.5 ℃

DASY5 Configuration:
- Probe: EX3DV4 - SN3931; ConvF(8.62, 8.62, 8.62) ; Calibrated: 2018/9/27
- Sensor-Surface: 1.4mm (Mechanical Surface Detection)
- Electronics: DAE4 Sn1399; Calibrated: 2018/11/16
- Phantom: SAM_Left; Type: QD000P40CD; Serial: TP:1815
- Measurement SW: DASY52, Version 52.10 (1);SEMCAD X Version 14.6.11 (7439)

Pin=250mW/Area Scan (61x61x1): Interpolated grid: dx=1.500 mm, dy=1.500 mm
Maximum value of SAR (interpolated) = 14.7 W/kg

Pin=250mW/Zoom Scan (5x5x7)/Cube 0: Measurement grid: dx=8mm, dy=8mm, dz=5mm
Reference Value = 106.5 V/m; Power Drift = -0.00 dB
Peak SAR (extrapolated) = 17.4 W/kg
SAR(1 g) = 9.67 W/kg; SAR(10 g) = 5.24 W/kg
Maximum value of SAR (measured) = 14.2 W/kg

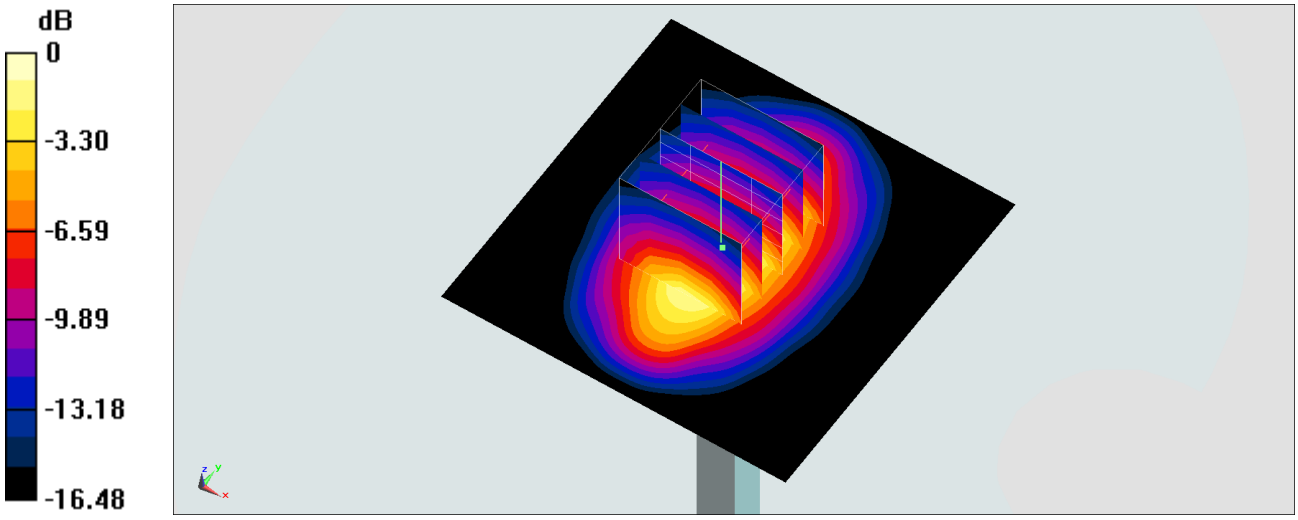

0 dB = 14.2 W/kg = 11.52 dBW/kg

System Check_Head_1900MHz

DUT: D1900V2-5d041

Communication System: CW; Frequency: 1900 MHz;Duty Cycle: 1:1
Medium: HSL_1900_190212 Medium parameters used: f = 1900 MHz; σ = 1.439 S/m; ε_r = 39.113; ρ = 1000 kg/m^3
Ambient Temperature：23.5 ℃; Liquid Temperature：22.5 ℃

DASY5 Configuration:
- Probe: EX3DV4 - SN3931; ConvF(8.33, 8.33, 8.33) ; Calibrated: 2018/9/27
- Sensor-Surface: 1.4mm (Mechanical Surface Detection)
- Electronics: DAE4 Sn1399; Calibrated: 2018/11/16
- Phantom: SAM_Left; Type: QD000P40CD; Serial: TP:1815
- Measurement SW: DASY52, Version 52.10 (1);SEMCAD X Version 14.6.11 (7439)

Pin=250mW/Area Scan (61x61x1): Interpolated grid: dx=1.500 mm, dy=1.500 mm
Maximum value of SAR (interpolated) = 17.8 W/kg

Pin=250mW/Zoom Scan (5x5x7)/Cube 0: Measurement grid: dx=8mm, dy=8mm, dz=5mm
Reference Value = 111.3 V/m; Power Drift = -0.06 dB
Peak SAR (extrapolated) = 21.0 W/kg
SAR(1 g) = 10.9 W/kg; SAR(10 g) = 5.63 W/kg
Maximum value of SAR (measured) = 17.2 W/kg

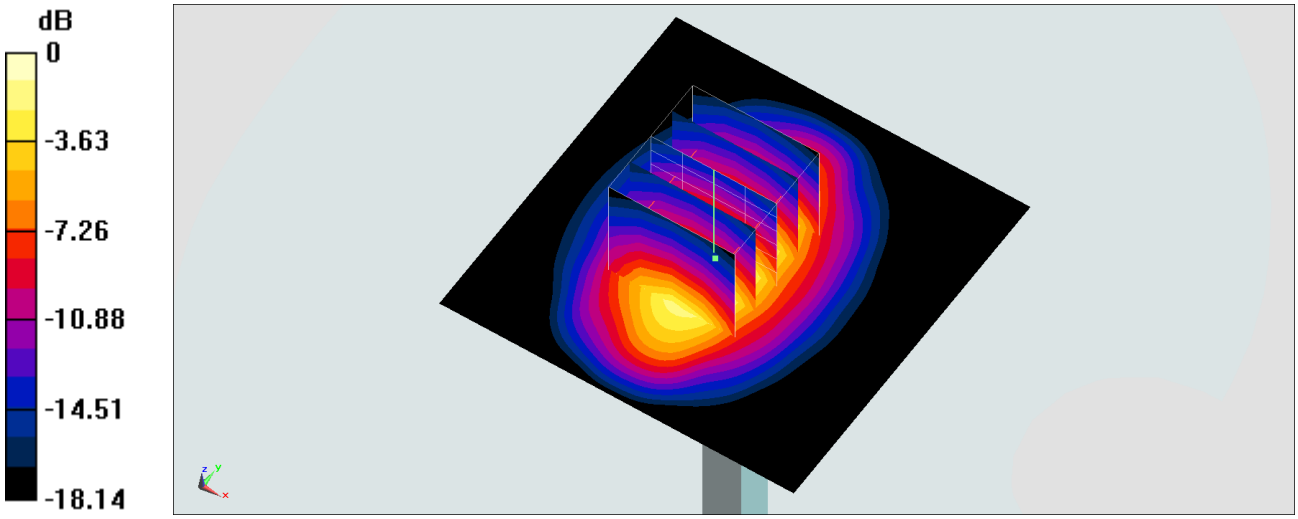

0 dB = 17.2 W/kg = 12.36 dBW/kg

System Check_Head_2450MHz

DUT: D2450V2-736

Communication System: CW; Frequency: 2450 MHz;Duty Cycle: 1:1
Medium: HSL_2450_190219 Medium parameters used: f = 2450 MHz; σ = 1.792 S/m; ε_r = 40.089; ρ = 1000 kg/m^3
Ambient Temperature：23.9 ℃; Liquid Temperature：22.9 ℃

DASY5 Configuration:
- Probe: EX3DV4 - SN3931; ConvF(7.54, 7.54, 7.54) ; Calibrated: 2018/9/27
- Sensor-Surface: 1.4mm (Mechanical Surface Detection)
- Electronics: DAE4 Sn1399; Calibrated: 2018/11/16
- Phantom: SAM_Left; Type: QD000P40CD; Serial: TP:1815
- Measurement SW: DASY52, Version 52.10 (1);SEMCAD X Version 14.6.11 (7439)

Pin=250mW/Area Scan (71x71x1): Interpolated grid: dx=1.200 mm, dy=1.200 mm
Maximum value of SAR (interpolated) = 22.9 W/kg

Pin=250mW/Zoom Scan (7x7x7)/Cube 0: Measurement grid: dx=5mm, dy=5mm, dz=5mm
Reference Value = 111.9 V/m; Power Drift = 0.05 dB
Peak SAR (extrapolated) = 27.7 W/kg
SAR(1 g) = 13.2 W/kg; SAR(10 g) = 6.1 W/kg
Maximum value of SAR (measured) = 22.4 W/kg

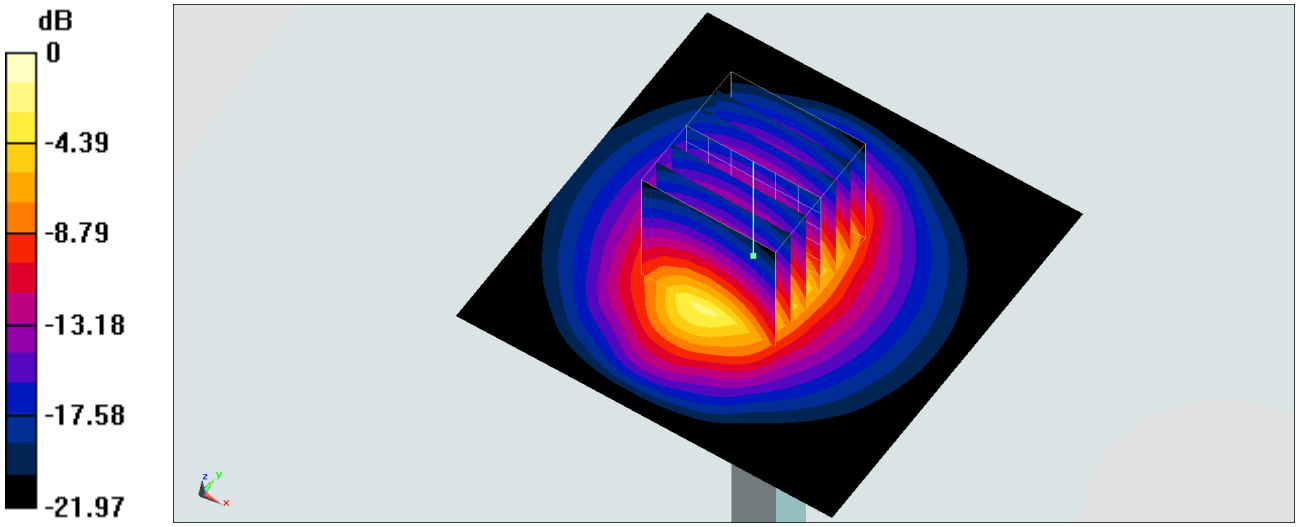

0 dB = 22.4 W/kg = 13.50 dBW/kg

System Check_Head_2450MHz

DUT: D2450V2-736

Communication System: CW; Frequency: 2450 MHz;Duty Cycle: 1:1
Medium: HSL_2450_190304 Medium parameters used: f = 2450 MHz; σ = 1.797 S/m; ε_r = 38.672; ρ = 1000 kg/m^3
Ambient Temperature：23.4 ℃; Liquid Temperature：22.4 ℃

DASY5 Configuration:
- Probe: EX3DV4 - SN3931; ConvF(7.54, 7.54, 7.54) ; Calibrated: 2018/9/27
- Sensor-Surface: 1.4mm (Mechanical Surface Detection)
- Electronics: DAE4 Sn1399; Calibrated: 2018/11/16
- Phantom: SAM_Left; Type: QD000P40CD; Serial: TP:1815
- Measurement SW: DASY52, Version 52.10 (1);SEMCAD X Version 14.6.11 (7439)

Pin=250mW/Area Scan (71x71x1): Interpolated grid: dx=1.200 mm, dy=1.200 mm
Maximum value of SAR (interpolated) = 22.9 W/kg

Pin=250mW/Zoom Scan (7x7x7)/Cube 0: Measurement grid: dx=5mm, dy=5mm, dz=5mm
Reference Value = 111.9 V/m; Power Drift = 0.02 dB
Peak SAR (extrapolated) = 27.8 W/kg
SAR(1 g) = 13.3 W/kg; SAR(10 g) = 6.12 W/kg
Maximum value of SAR (measured) = 22.5 W/kg

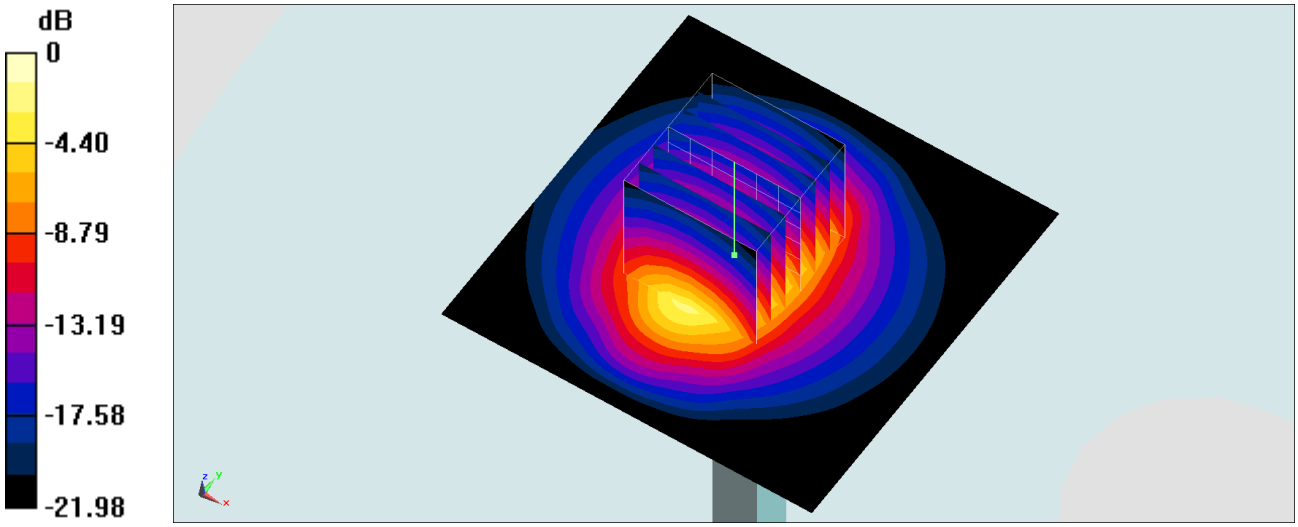

0 dB = 22.5 W/kg = 13.52 dBW/kg

System Check_Head_2600MHz

DUT: D2600V2-1008

Communication System: CW; Frequency: 2600 MHz;Duty Cycle: 1:1
Medium: HSL_2600_190212 Medium parameters used: f = 2600 MHz; σ = 1.948 S/m; ε_r = 39.437; ρ = 1000 kg/m^3
Ambient Temperature：23.6 ℃; Liquid Temperature：22.6 ℃

DASY5 Configuration:
- Probe: EX3DV4 - SN3931; ConvF(7.3, 7.3, 7.3) ; Calibrated: 2018/9/27
- Sensor-Surface: 1.4mm (Mechanical Surface Detection)
- Electronics: DAE4 Sn1399; Calibrated: 2018/11/16
- Phantom: SAM_Left; Type: QD000P40CD; Serial: TP:1815
- Measurement SW: DASY52, Version 52.10 (1);SEMCAD X Version 14.6.11 (7439)

Pin=250mW/Area Scan (61x61x1): Interpolated grid: dx=1.200 mm, dy=1.200 mm
Maximum value of SAR (interpolated) = 25.9 W/kg

Pin=250mW/Zoom Scan (7x7x7)/Cube 0: Measurement grid: dx=5mm, dy=5mm, dz=5mm
Reference Value = 124.8 V/m; Power Drift = -0.14 dB
Peak SAR (extrapolated) = 31.7 W/kg
SAR(1 g) = 14.3 W/kg; SAR(10 g) = 6.42 W/kg
Maximum value of SAR (measured) = 24.8 W/kg

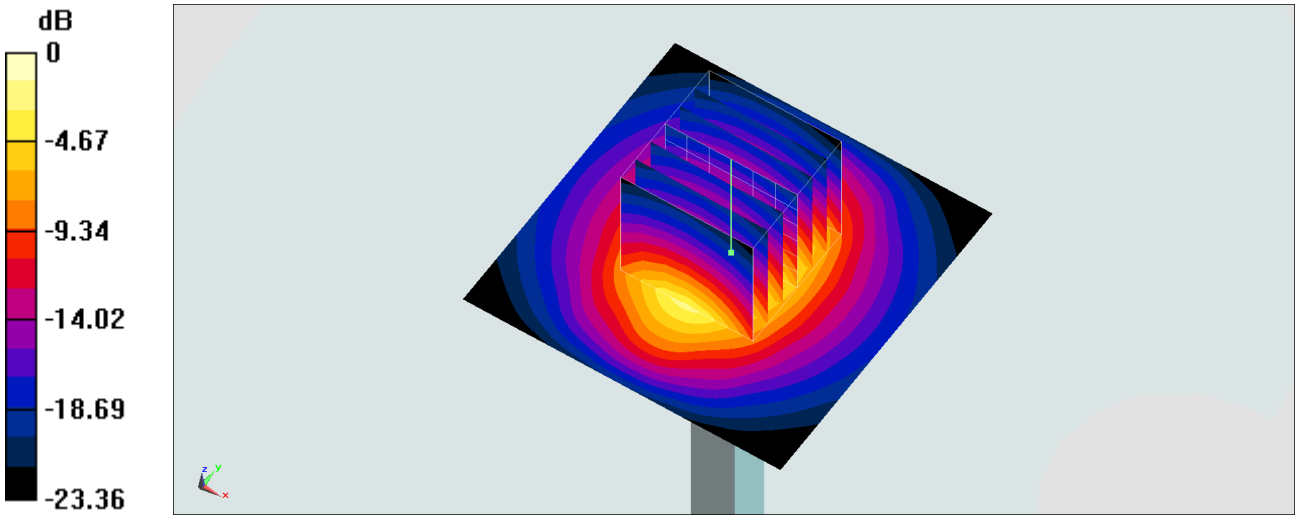

0 dB = 24.8 W/kg = 13.94 dBW/kg

System Check_Head_5250MHz

DUT: D5GHzV2-1006

Communication System: CW; Frequency: 5250 MHz;Duty Cycle: 1:1
Medium: HSL_5G_190219 Medium parameters used: f = 5250 MHz; σ = 4.674 S/m; ε_r = 35.972; ρ = 1000 kg/m^3
Ambient Temperature：23.5 ℃; Liquid Temperature：22.5 ℃

DASY5 Configuration:
- Probe: EX3DV4 - SN3931; ConvF(5.12, 5.12, 5.12) ; Calibrated: 2018/9/27
- Sensor-Surface: 1.4mm (Mechanical Surface Detection)
- Electronics: DAE4 Sn1399; Calibrated: 2018/11/16
- Phantom: SAM_Left; Type: QD000P40CD; Serial: TP:1815
- Measurement SW: DASY52, Version 52.10 (1);SEMCAD X Version 14.6.11 (7439)

Pin=100mW/Area Scan (71x71x1): Interpolated grid: dx=1.000 mm, dy=1.000 mm
Maximum value of SAR (interpolated) = 20.3 W/kg

Pin=100mW/Zoom Scan (8x8x7)/Cube 0: Measurement grid: dx=4mm, dy=4mm, dz=1.4mm
Reference Value = 73.02 V/m; Power Drift = -0.11 dB
Peak SAR (extrapolated) = 31.4 W/kg
SAR(1 g) = 8.04 W/kg; SAR(10 g) = 2.33 W/kg
Maximum value of SAR (measured) = 19.9 W/kg

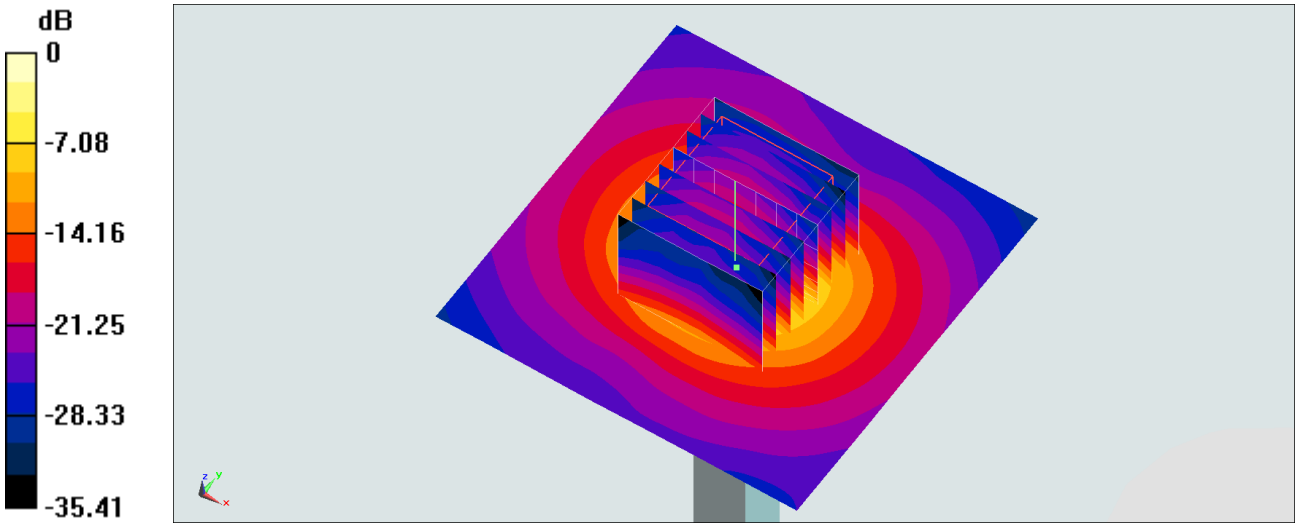

0 dB = 19.9 W/kg = 12.99 dBW/kg

System Check_Head_5600MHz

DUT: D5GHzV2-1006

Communication System: CW; Frequency: 5600 MHz;Duty Cycle: 1:1
Medium: HSL_5G_190219 Medium parameters used: f = 5600 MHz; σ = 5.014 S/m; ε_r = 35.497; ρ = 1000 kg/m^3
Ambient Temperature：23.5 ℃; Liquid Temperature：22.5 ℃

DASY5 Configuration:
- Probe: EX3DV4 - SN3931; ConvF(4.47, 4.47, 4.47) ; Calibrated: 2018/9/27
- Sensor-Surface: 1.4mm (Mechanical Surface Detection)
- Electronics: DAE4 Sn1399; Calibrated: 2018/11/16
- Phantom: SAM_Left; Type: QD000P40CD; Serial: TP:1815
- Measurement SW: DASY52, Version 52.10 (1);SEMCAD X Version 14.6.11 (7439)

Pin=100mW/Area Scan (71x71x1): Interpolated grid: dx=1.000 mm, dy=1.000 mm
Maximum value of SAR (interpolated) = 23.0 W/kg

Pin=100mW/Zoom Scan (7x7x7)/Cube 0: Measurement grid: dx=4mm, dy=4mm, dz=1.4mm
Reference Value = 76.23 V/m; Power Drift = 0.02 dB
Peak SAR (extrapolated) = 39.2 W/kg
SAR(1 g) = 8.71 W/kg; SAR(10 g) = 2.45 W/kg
Maximum value of SAR (measured) = 22.8 W/kg

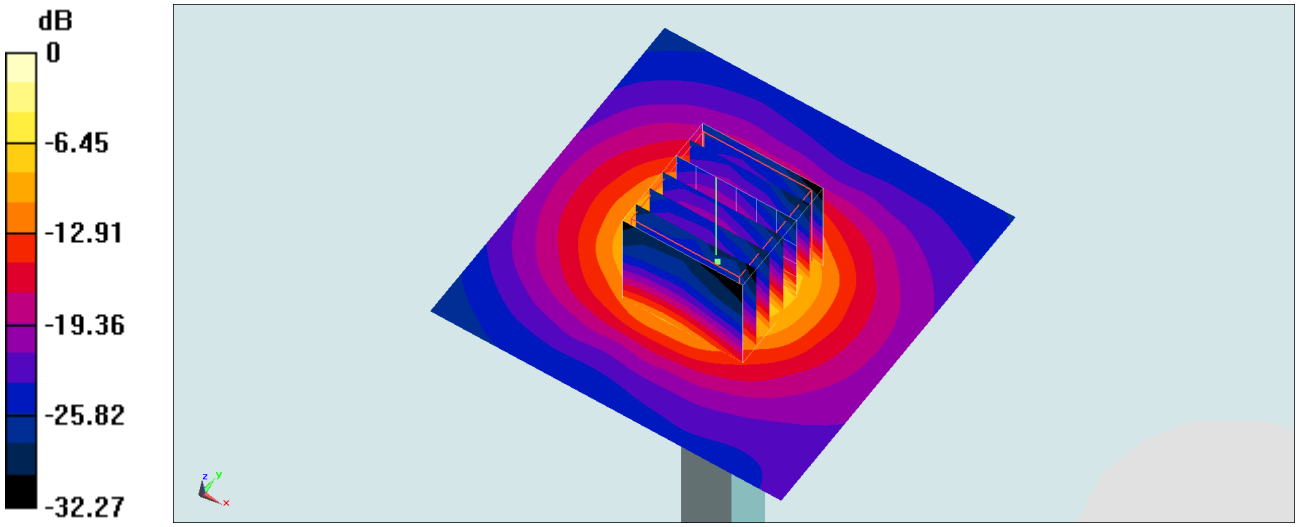

0 dB = 22.8 W/kg = 13.58 dBW/kg

System Check_Head_5750MHz

DUT: D5GHzV2-1006

Communication System: CW ; Frequency: 5750 MHz;Duty Cycle: 1:1
Medium: HSL_5G_190219 Medium parameters used: f = 5750 MHz; σ = 5.171 S/m; ε_r = 35.291; ρ = 1000 kg/m^3
Ambient Temperature：23.5 ℃; Liquid Temperature：22.5 ℃

DASY5 Configuration:
- Probe: EX3DV4 - SN3931; ConvF(4.72, 4.72, 4.72) ; Calibrated: 2018/9/27
- Sensor-Surface: 1.4mm (Mechanical Surface Detection)
- Electronics: DAE4 Sn1399; Calibrated: 2018/11/16
- Phantom: SAM_Left; Type: QD000P40CD; Serial: TP:1815
- Measurement SW: DASY52, Version 52.10 (1);SEMCAD X Version 14.6.11 (7439)

Pin=100mW/Area Scan (71x71x1): Interpolated grid: dx=1.000 mm, dy=1.000 mm
Maximum value of SAR (interpolated) = 20.8 W/kg

Pin=100mW/Zoom Scan (7x7x7)/Cube 0: Measurement grid: dx=4mm, dy=4mm, dz=1.4mm
Reference Value = 68.74 V/m; Power Drift = 0.10 dB
Peak SAR (extrapolated) = 34.8 W/kg
SAR(1 g) = 8.11 W/kg; SAR(10 g) = 2.23 W/kg
Maximum value of SAR (measured) = 20.5 W/kg

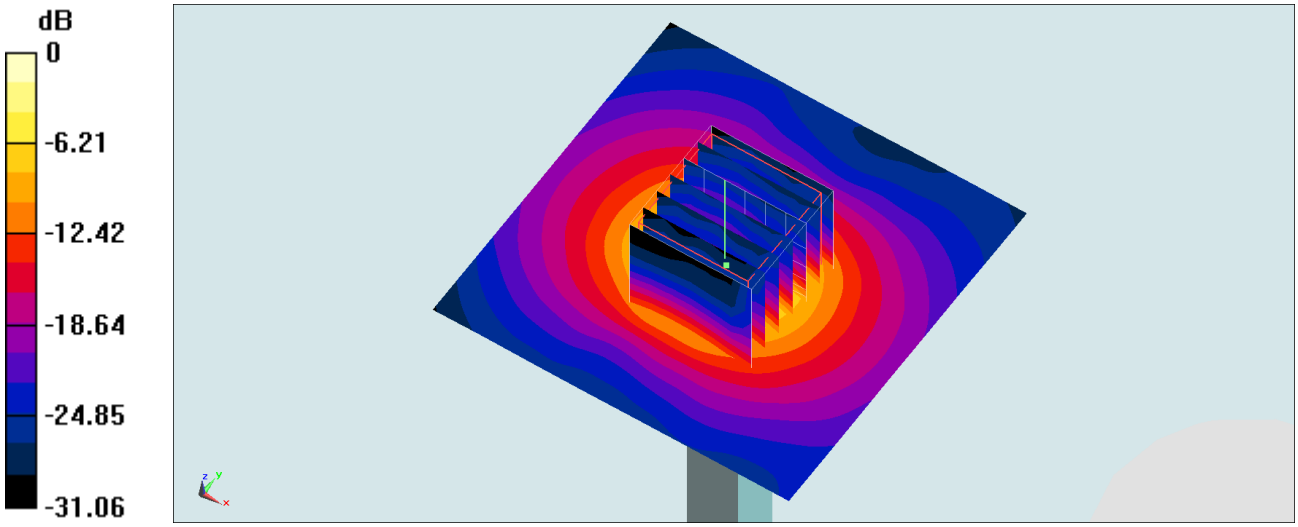

0 dB = 20.5 W/kg = 13.12 dBW/kg

System Check_Body_750MHz

DUT: D750V3-1012

Communication System: CW; Frequency: 750 MHz;Duty Cycle: 1:1
Medium: MSL_750_190301 Medium parameters used: f = 750 MHz; σ = 0.969 S/m; ε_r = 55.292; ρ = 1000 kg/m^3
Ambient Temperature：23.5 ℃; Liquid Temperature：22.5 ℃

DASY5 Configuration:
- Probe: EX3DV4 - SN3931; ConvF(10.17, 10.17, 10.17) ; Calibrated: 2018/9/27
- Sensor-Surface: 1.4mm (Mechanical Surface Detection)
- Electronics: DAE4 Sn1399; Calibrated: 2018/11/16
- Phantom: SAM_Left; Type: QD000P40CD; Serial: TP:1815
- Measurement SW: DASY52, Version 52.10 (1);SEMCAD X Version 14.6.11 (7439)

Pin=250mW/Area Scan (61x61x1): Interpolated grid: dx=1.500 mm, dy=1.500 mm
Maximum value of SAR (interpolated) = 2.95 W/kg

Pin=250mW/Zoom Scan (5x5x7)/Cube 0: Measurement grid: dx=8mm, dy=8mm, dz=5mm
Reference Value = 58.04 V/m; Power Drift = -0.03 dB
Peak SAR (extrapolated) = 3.41 W/kg
SAR(1 g) = 2.25 W/kg; SAR(10 g) = 1.51 W/kg
Maximum value of SAR (measured) = 2.94 W/kg

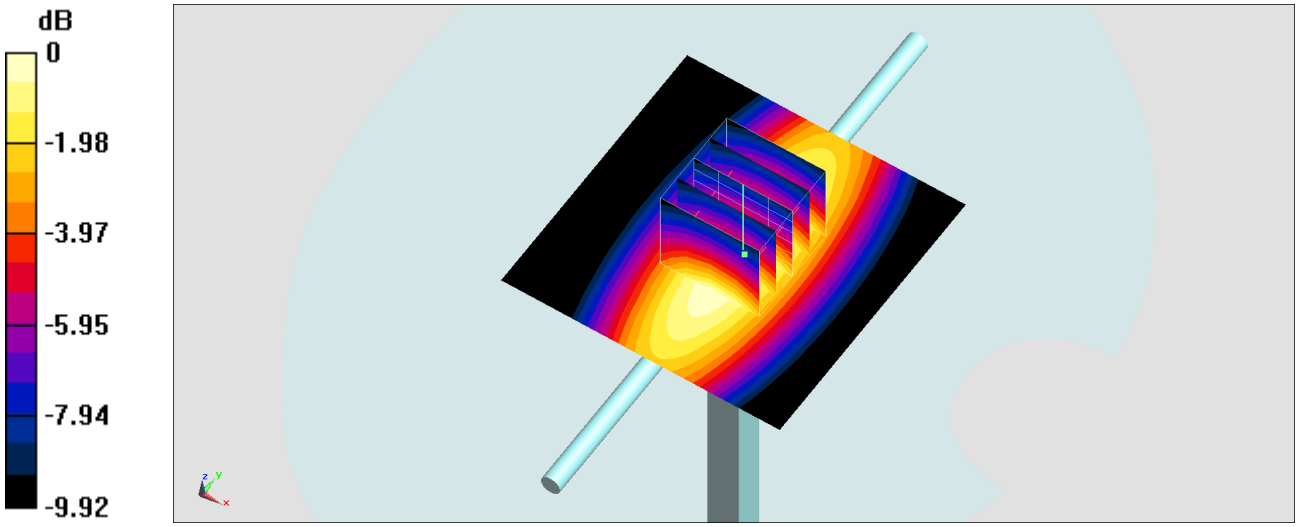

0 dB = 2.94 W/kg = 4.68 dBW/kg

System Check_Body_835MHz

DUT: D835V2-499

Communication System: CW; Frequency: 835 MHz;Duty Cycle: 1:1
Medium: MSL_850_190221 Medium parameters used: f = 835 MHz; σ = 0.965 S/m; ε_r = 55.818; ρ = 1000 kg/m^3
Ambient Temperature：23.2 ℃; Liquid Temperature：22.2 ℃

DASY5 Configuration:
- Probe: EX3DV4 - SN3931; ConvF(9.92, 9.92, 9.92) ; Calibrated: 2018/9/27
- Sensor-Surface: 1.4mm (Mechanical Surface Detection)
- Electronics: DAE4 Sn1399; Calibrated: 2018/11/16
- Phantom: SAM_Left; Type: QD000P40CD; Serial: TP:1815
- Measurement SW: DASY52, Version 52.10 (1);SEMCAD X Version 14.6.11 (7439)

Pin=250mW/Area Scan (61x61x1): Interpolated grid: dx=1.500 mm, dy=1.500 mm
Maximum value of SAR (interpolated) = 3.31 W/kg

Pin=250mW/Zoom Scan (5x5x7)/Cube 0: Measurement grid: dx=8mm, dy=8mm, dz=5mm
Reference Value = 60.81 V/m; Power Drift = -0.09 dB
Peak SAR (extrapolated) = 3.66 W/kg
SAR(1 g) = 2.4 W/kg; SAR(10 g) = 1.58 W/kg
Maximum value of SAR (measured) = 3.22 W/kg

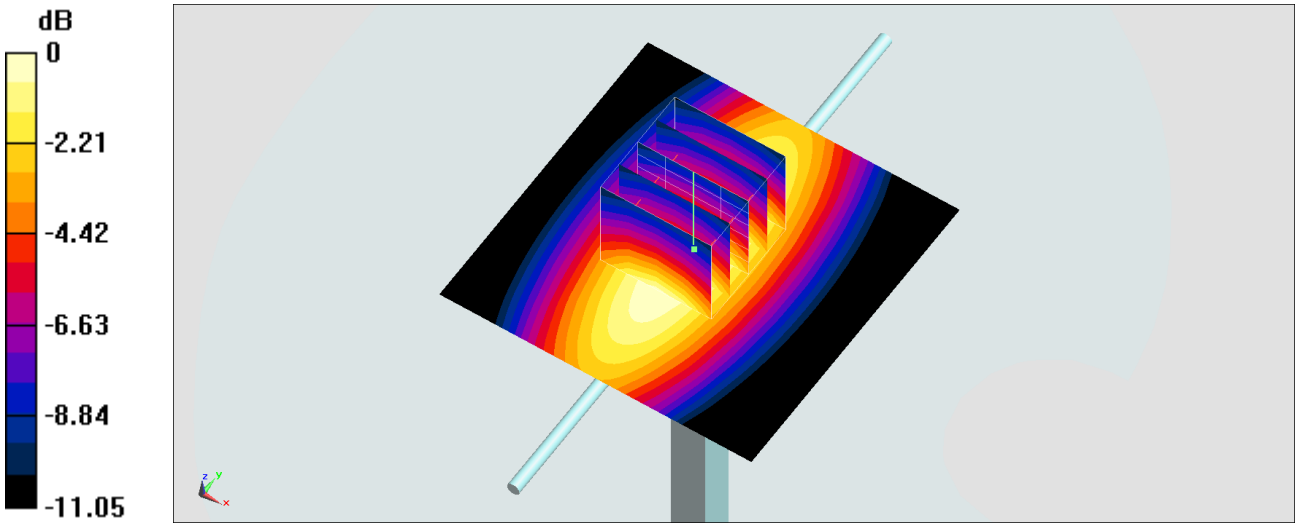

0 dB = 3.22 W/kg = 5.08 dBW/kg

System Check_Body_835MHz

DUT: D835V2-499

Communication System: CW; Frequency: 835 MHz;Duty Cycle: 1:1
Medium: MSL_850_190301 Medium parameters used: f = 835 MHz; σ = 0.975 S/m; ε_r = 56.182; ρ = 1000 kg/m^3
Ambient Temperature：23.5 ℃; Liquid Temperature：22.5 ℃

DASY5 Configuration:
- Probe: EX3DV4 - SN3931; ConvF(9.92, 9.92, 9.92) ; Calibrated: 2018/9/27
- Sensor-Surface: 1.4mm (Mechanical Surface Detection)
- Electronics: DAE4 Sn1399; Calibrated: 2018/11/16
- Phantom: SAM_Left; Type: QD000P40CD; Serial: TP:1815
- Measurement SW: DASY52, Version 52.10 (1);SEMCAD X Version 14.6.11 (7439)

Pin=250mW/Area Scan (61x61x1): Interpolated grid: dx=1.500 mm, dy=1.500 mm
Maximum value of SAR (interpolated) = 3.34 W/kg

Pin=250mW/Zoom Scan (5x5x7)/Cube 0: Measurement grid: dx=8mm, dy=8mm, dz=5mm
Reference Value = 60.81 V/m; Power Drift = -0.13 dB
Peak SAR (extrapolated) = 3.70 W/kg
SAR(1 g) = 2.43 W/kg; SAR(10 g) = 1.6 W/kg
Maximum value of SAR (measured) = 3.25 W/kg

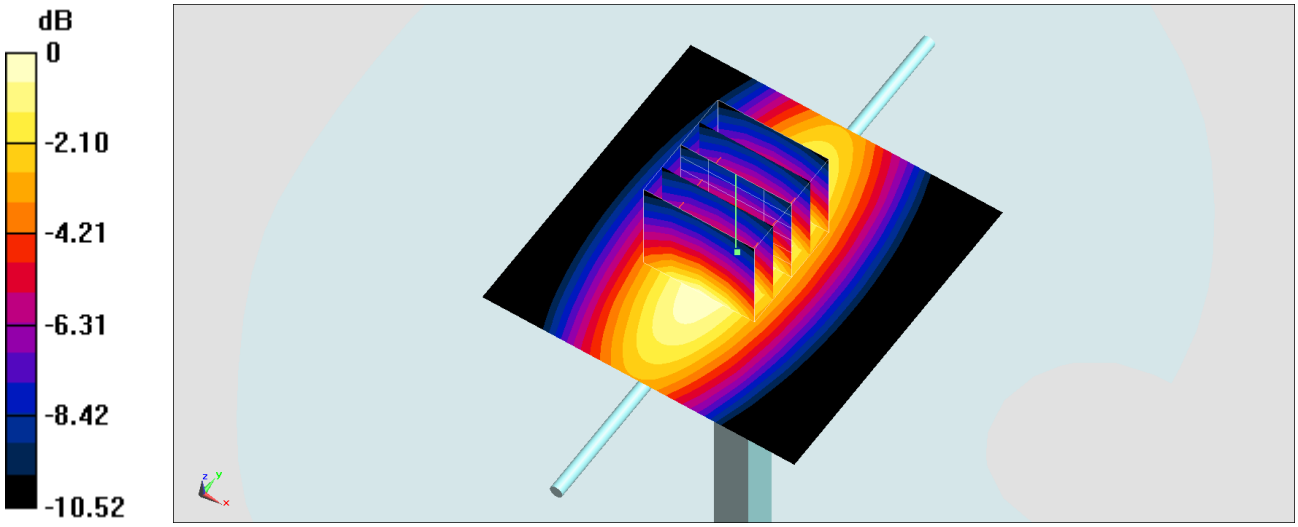

0 dB = 3.25 W/kg = 5.12 dBW/kg

System Check_Body_835MHz

DUT: D835V2-499

Communication System: CW; Frequency: 835 MHz;Duty Cycle: 1:1
Medium: MSL_850_190302 Medium parameters used: f = 835 MHz; σ = 0.973 S/m; ε_r = 55.69; ρ = 1000 kg/m^3
Ambient Temperature：23.6 ℃; Liquid Temperature：22.6 ℃

DASY5 Configuration:
- Probe: EX3DV4 - SN3931; ConvF(9.92, 9.92, 9.92) ; Calibrated: 2018/9/27
- Sensor-Surface: 1.4mm (Mechanical Surface Detection)
- Electronics: DAE4 Sn1399; Calibrated: 2018/11/16
- Phantom: SAM_Left; Type: QD000P40CD; Serial: TP:1815
- Measurement SW: DASY52, Version 52.10 (1);SEMCAD X Version 14.6.11 (7439)

Pin=250mW/Area Scan (61x61x1): Interpolated grid: dx=1.500 mm, dy=1.500 mm
Maximum value of SAR (interpolated) = 3.47 W/kg

Pin=250mW/Zoom Scan (5x5x7)/Cube 0: Measurement grid: dx=8mm, dy=8mm, dz=5mm
Reference Value = 61.54 V/m; Power Drift = -0.03 dB
Peak SAR (extrapolated) = 3.90 W/kg
SAR(1 g) = 2.6 W/kg; SAR(10 g) = 1.73 W/kg
Maximum value of SAR (measured) = 3.46 W/kg

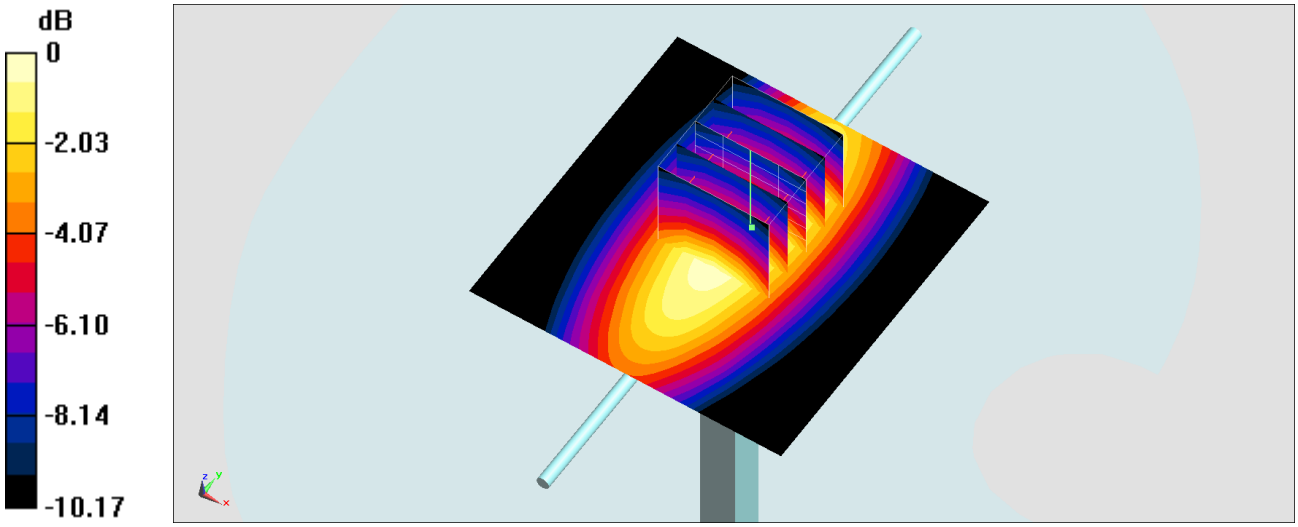

0 dB = 3.46 W/kg = 5.39 dBW/kg

System Check_Body_835MHz

DUT: D835V2-499

Communication System: CW; Frequency: 835 MHz;Duty Cycle: 1:1
Medium: MSL_850_190305 Medium parameters used: f = 835 MHz; σ = 0.977 S/m; ε_r = 55.81; ρ = 1000 kg/m^3
Ambient Temperature：23.5 ℃; Liquid Temperature：22.5 ℃

DASY5 Configuration:
- Probe: EX3DV4 - SN3931; ConvF(9.92, 9.92, 9.92) ; Calibrated: 2018/9/27
- Sensor-Surface: 1.4mm (Mechanical Surface Detection)
- Electronics: DAE4 Sn1399; Calibrated: 2018/11/16
- Phantom: SAM_Left; Type: QD000P40CD; Serial: TP:1815
- Measurement SW: DASY52, Version 52.10 (1);SEMCAD X Version 14.6.11 (7439)

Pin=250mW/Area Scan (61x61x1): Interpolated grid: dx=1.500 mm, dy=1.500 mm
Maximum value of SAR (interpolated) = 3.43 W/kg

Pin=250mW/Zoom Scan (5x5x7)/Cube 0: Measurement grid: dx=8mm, dy=8mm, dz=5mm
Reference Value = 61.50 V/m; Power Drift = 0.01 dB
Peak SAR (extrapolated) = 3.87 W/kg
SAR(1 g) = 2.57 W/kg; SAR(10 g) = 1.7 W/kg
Maximum value of SAR (measured) = 3.42 W/kg

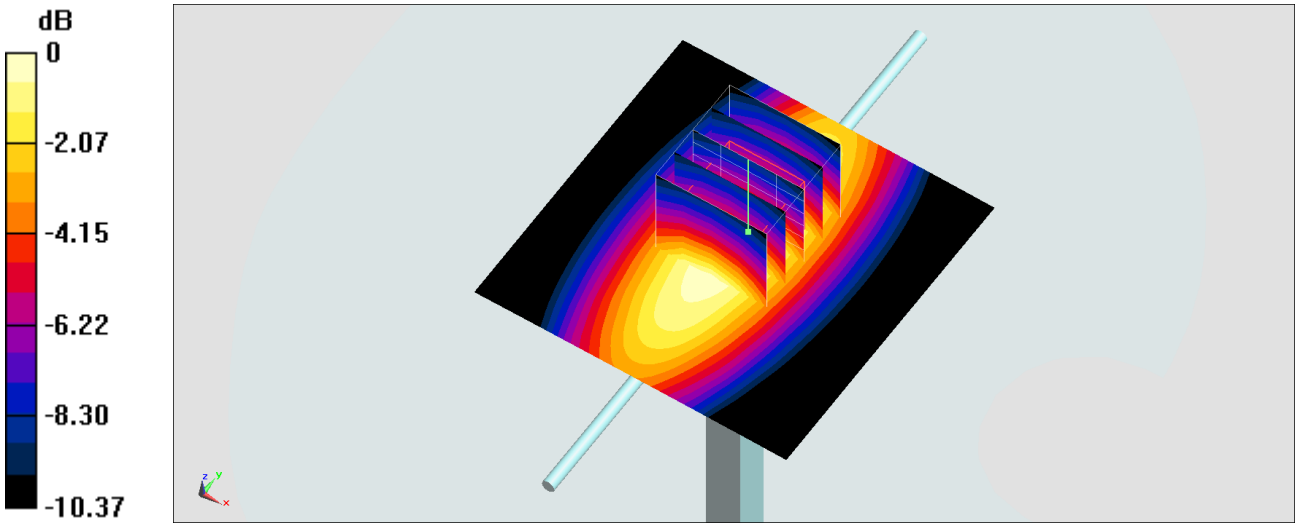

0 dB = 3.42 W/kg = 5.34 dBW/kg

System Check_Body_1750MHz

DUT: D1750V2-1068

Communication System: CW; Frequency: 1750 MHz;Duty Cycle: 1:1
Medium: MSL_1750_190227 Medium parameters used: f = 1750 MHz; σ = 1.504 S/m; ε_r = 54.158; ρ = 1000 kg/m^3
Ambient Temperature：23.8 ℃; Liquid Temperature：22.8 ℃

DASY5 Configuration:
- Probe: EX3DV4 - SN3931; ConvF(8.4, 8.4, 8.4) ; Calibrated: 2018/9/27
- Sensor-Surface: 1.4mm (Mechanical Surface Detection)
- Electronics: DAE4 Sn1399; Calibrated: 2018/11/16
- Phantom: SAM_Left; Type: QD000P40CD; Serial: TP:1815
- Measurement SW: DASY52, Version 52.10 (1);SEMCAD X Version 14.6.11 (7439)

Pin=250mW/Area Scan (61x61x1): Interpolated grid: dx=1.500 mm, dy=1.500 mm
Maximum value of SAR (interpolated) = 13.9 W/kg

Pin=250mW/Zoom Scan (5x5x7)/Cube 0: Measurement grid: dx=8mm, dy=8mm, dz=5mm
Reference Value = 95.16 V/m; Power Drift = -0.16 dB
Peak SAR (extrapolated) = 14.5 W/kg
SAR(1 g) = 8.5 W/kg; SAR(10 g) = 4.67 W/kg
Maximum value of SAR (measured) = 12.3 W/kg

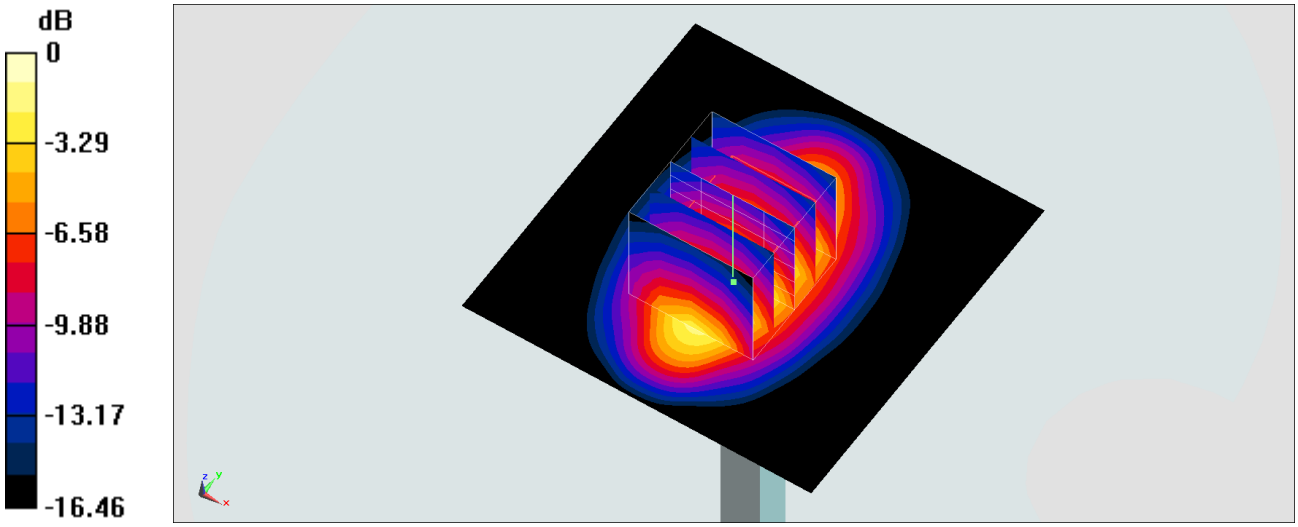

0 dB = 12.3 W/kg = 10.90 dBW/kg

System Check_Body_1900MHz

DUT: D1900V2-5d041

Communication System: CW; Frequency: 1900 MHz;Duty Cycle: 1:1
Medium: MSL_1900_190221 Medium parameters used: f = 1900 MHz; σ = 1.55 S/m; ε_r = 55.343; ρ = 1000 kg/m^3
Ambient Temperature：23.5 ℃; Liquid Temperature：22.5 ℃

DASY5 Configuration:
- Probe: EX3DV4 - SN3931; ConvF(8, 8, 8) ; Calibrated: 2018/9/27
- Sensor-Surface: 1.4mm (Mechanical Surface Detection)
- Electronics: DAE4 Sn1399; Calibrated: 2018/11/16
- Phantom: SAM_Left; Type: QD000P40CD; Serial: TP:1815
- Measurement SW: DASY52, Version 52.10 (1);SEMCAD X Version 14.6.11 (7439)

Pin=250mW/Area Scan (61x61x1): Interpolated grid: dx=1.500 mm, dy=1.500 mm
Maximum value of SAR (interpolated) = 15.5 W/kg

Pin=250mW/Zoom Scan (5x5x7)/Cube 0: Measurement grid: dx=8mm, dy=8mm, dz=5mm
Reference Value = 103.7 V/m; Power Drift = -0.09 dB
Peak SAR (extrapolated) = 17.7 W/kg
SAR(1 g) = 9.64 W/kg; SAR(10 g) = 4.99 W/kg
Maximum value of SAR (measured) = 14.9 W/kg

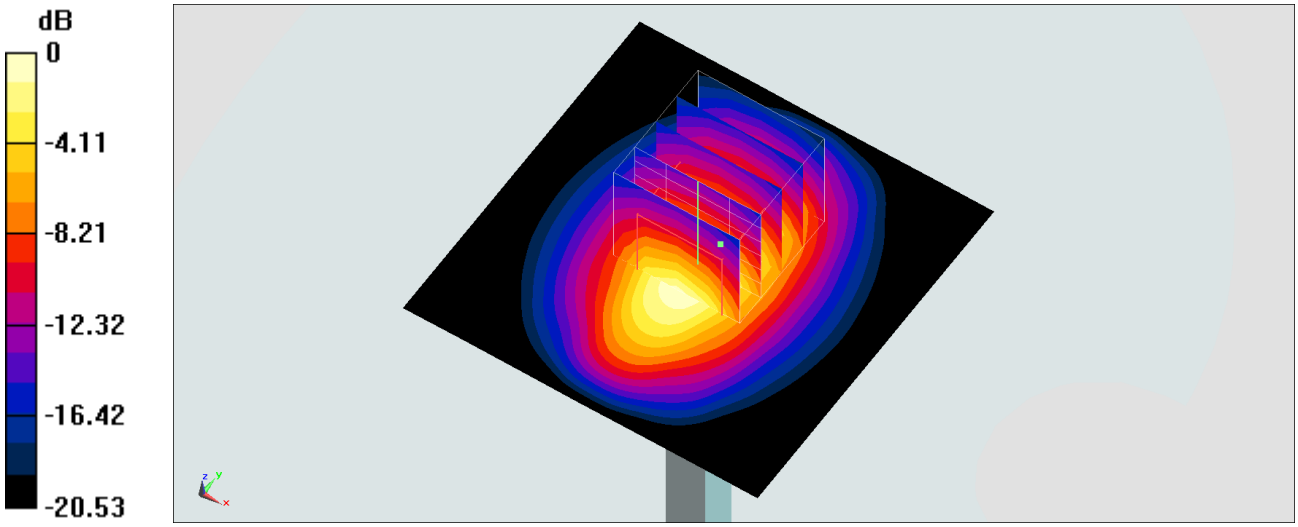

0 dB = 14.9 W/kg = 11.73 dBW/kg

System Check_Body_1900MHz

DUT: D1900V2-5d041

Communication System: CW; Frequency: 1900 MHz;Duty Cycle: 1:1
Medium: MSL_1900_190226 Medium parameters used: f = 1900 MHz; σ = 1.582 S/m; ε_r = 54.608; ρ = 1000 kg/m^3
Ambient Temperature：23.8 ℃; Liquid Temperature：22.8 ℃

DASY5 Configuration:
- Probe: EX3DV4 - SN3931; ConvF(8, 8, 8) ; Calibrated: 2018/9/27
- Sensor-Surface: 1.4mm (Mechanical Surface Detection)
- Electronics: DAE4 Sn1399; Calibrated: 2018/11/16
- Phantom: SAM_Left; Type: QD000P40CD; Serial: TP:1815
- Measurement SW: DASY52, Version 52.10 (1);SEMCAD X Version 14.6.11 (7439)

Pin=250mW/Area Scan (61x61x1): Interpolated grid: dx=1.500 mm, dy=1.500 mm
Maximum value of SAR (interpolated) = 17.3 W/kg

Pin=250mW/Zoom Scan (5x5x7)/Cube 0: Measurement grid: dx=8mm, dy=8mm, dz=5mm
Reference Value = 109.3 V/m; Power Drift = -0.08 dB
Peak SAR (extrapolated) = 20.1 W/kg
SAR(1 g) = 10.9 W/kg; SAR(10 g) = 5.84 W/kg
Maximum value of SAR (measured) = 17.2 W/kg

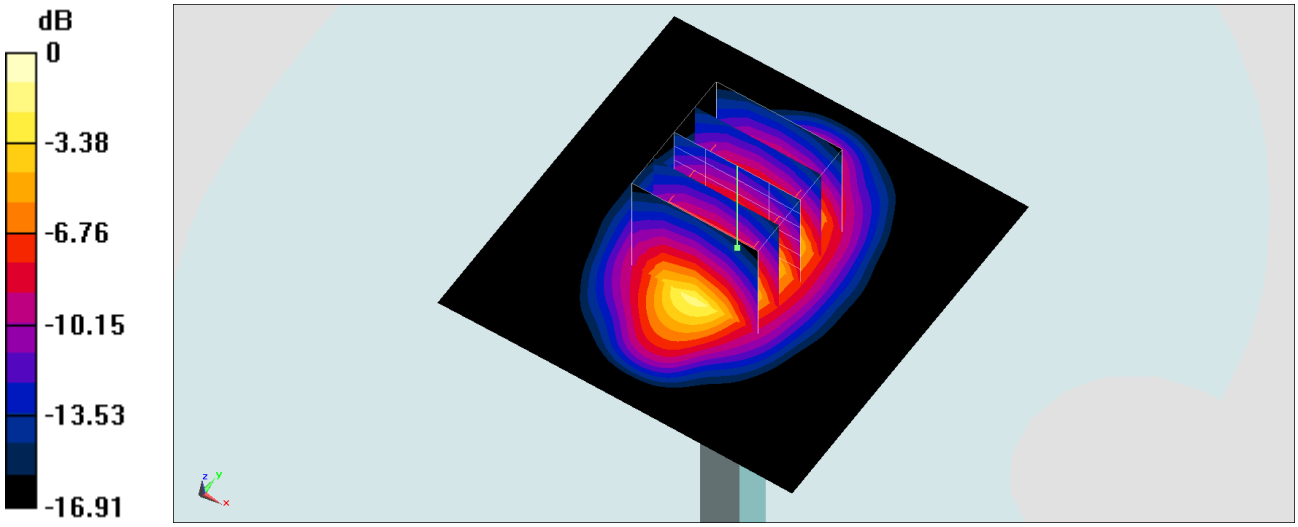

0 dB = 17.2 W/kg = 12.36 dBW/kg

System Check_Body_1900MHz

DUT: D1900V2-5d041

Communication System: CW; Frequency: 1900 MHz;Duty Cycle: 1:1
Medium: MSL_1900_190227 Medium parameters used: f = 1900 MHz; σ = 1.58 S/m; ε_r = 54.555; ρ = 1000 kg/m^3
Ambient Temperature：23.8 ℃; Liquid Temperature：22.8 ℃

DASY5 Configuration:
- Probe: ES3DV3 - SN3270; ConvF(4.77, 4.77, 4.77) ; Calibrated: 2018/9/24
- Sensor-Surface: 3mm (Mechanical Surface Detection)
- Electronics: DAE4 Sn699; Calibrated: 2019/1/3
- Phantom: SAM_Left; Type: QD000P40CD; Serial: TP:1815
- Measurement SW: DASY52, Version 52.10 (1);SEMCAD X Version 14.6.11 (7439)

Pin=250mW/Area Scan (61x61x1): Interpolated grid: dx=1.500 mm, dy=1.500 mm
Maximum value of SAR (interpolated) = 13.5 W/kg

Pin=250mW/Zoom Scan (5x5x7)/Cube 0: Measurement grid: dx=8mm, dy=8mm, dz=5mm
Reference Value = 96.68 V/m; Power Drift = -0.03 dB
Peak SAR (extrapolated) = 18.5 W/kg
SAR(1 g) = 10.6 W/kg; SAR(10 g) = 5.58 W/kg
Maximum value of SAR (measured) = 13.4 W/kg

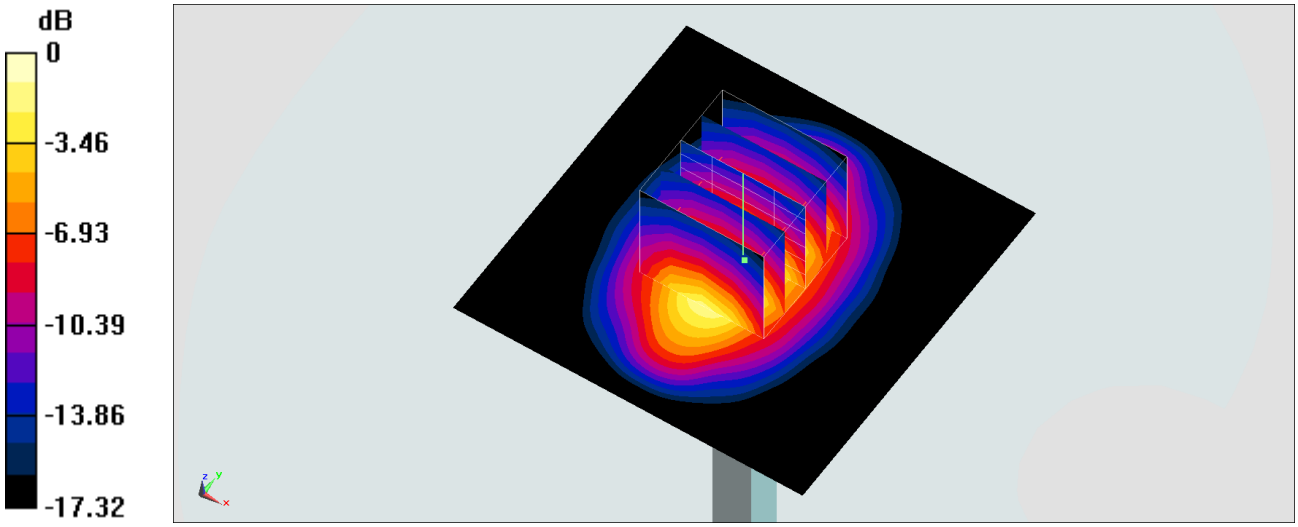

0 dB = 13.4 W/kg = 11.27 dBW/kg

System Check_Body_1900MHz

DUT: D1900V2-5d041

Communication System: CW; Frequency: 1900 MHz;Duty Cycle: 1:1
Medium: MSL_1900_190304 Medium parameters used: f = 1900 MHz; σ = 1.55 S/m; ε_r = 52.469; ρ = 1000 kg/m^3
Ambient Temperature：23.5 ℃; Liquid Temperature：22.5 ℃

DASY5 Configuration:
- Probe: EX3DV4 - SN3931; ConvF(8, 8, 8) ; Calibrated: 2018/9/27
- Sensor-Surface: 1.4mm (Mechanical Surface Detection)
- Electronics: DAE4 Sn1399; Calibrated: 2018/11/16
- Phantom: SAM_Left; Type: QD000P40CD; Serial: TP:1815
- Measurement SW: DASY52, Version 52.10 (1);SEMCAD X Version 14.6.11 (7439)

Pin=250mW/Area Scan (61x61x1): Interpolated grid: dx=1.500 mm, dy=1.500 mm
Maximum value of SAR (interpolated) = 16.5 W/kg

Pin=250mW/Zoom Scan (5x5x7)/Cube 0: Measurement grid: dx=8mm, dy=8mm, dz=5mm
Reference Value = 103.8 V/m; Power Drift = -0.01 dB
Peak SAR (extrapolated) = 19.3 W/kg
SAR(1 g) = 10.8 W/kg; SAR(10 g) = 5.7 W/kg
Maximum value of SAR (measured) = 16.4 W/kg

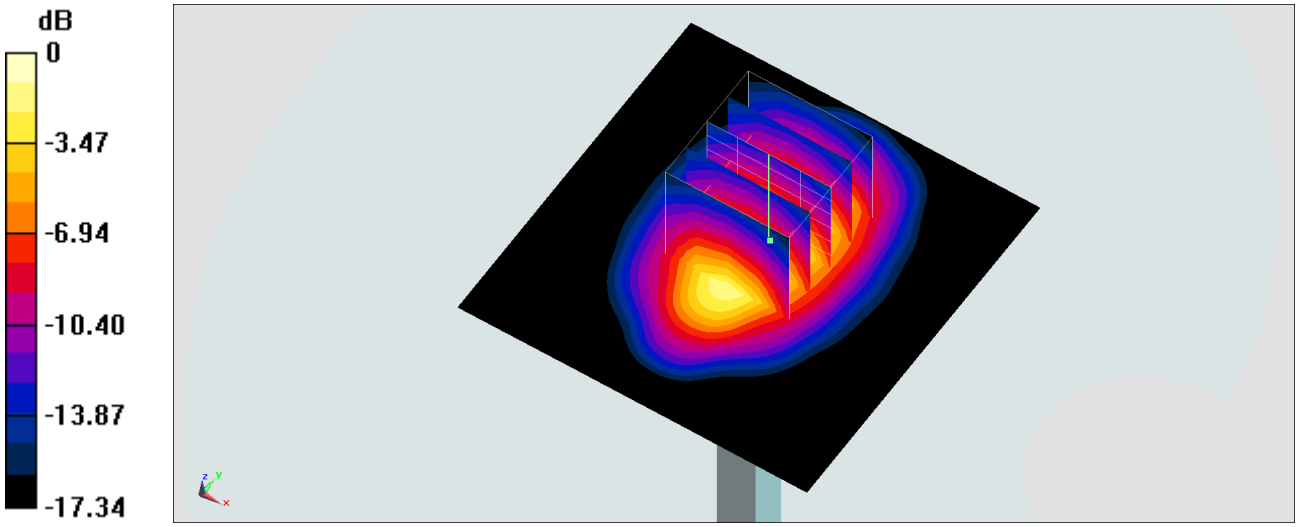

0 dB = 16.4 W/kg = 12.15 dBW/kg

System Check_Body_2450MHz

DUT: D2450V2-736

Communication System: CW; Frequency: 2450 MHz;Duty Cycle: 1:1
Medium: MSL_2450_190218 Medium parameters used: f = 2450 MHz; σ = 2.025 S/m; ε_r = 52.242; ρ = 1000 kg/m^3
Ambient Temperature：23.6 ℃; Liquid Temperature：22.6 ℃

DASY5 Configuration:
- Probe: EX3DV4 - SN3931; ConvF(7.56, 7.56, 7.56) ; Calibrated: 2018/9/27
- Sensor-Surface: 1.4mm (Mechanical Surface Detection)
- Electronics: DAE4 Sn1399; Calibrated: 2018/11/16
- Phantom: SAM_Left; Type: QD000P40CD; Serial: TP:1815
- Measurement SW: DASY52, Version 52.10 (1);SEMCAD X Version 14.6.11 (7439)

Pin=250mW/Area Scan (61x61x1): Interpolated grid: dx=1.200 mm, dy=1.200 mm
Maximum value of SAR (interpolated) = 22.7 W/kg

Pin=250mW/Zoom Scan (7x7x7)/Cube 0: Measurement grid: dx=5mm, dy=5mm, dz=5mm
Reference Value = 107.8 V/m; Power Drift = -0.08 dB
Peak SAR (extrapolated) = 27.0 W/kg
SAR(1 g) = 13.2 W/kg; SAR(10 g) = 6.19 W/kg
Maximum value of SAR (measured) = 21.9 W/kg

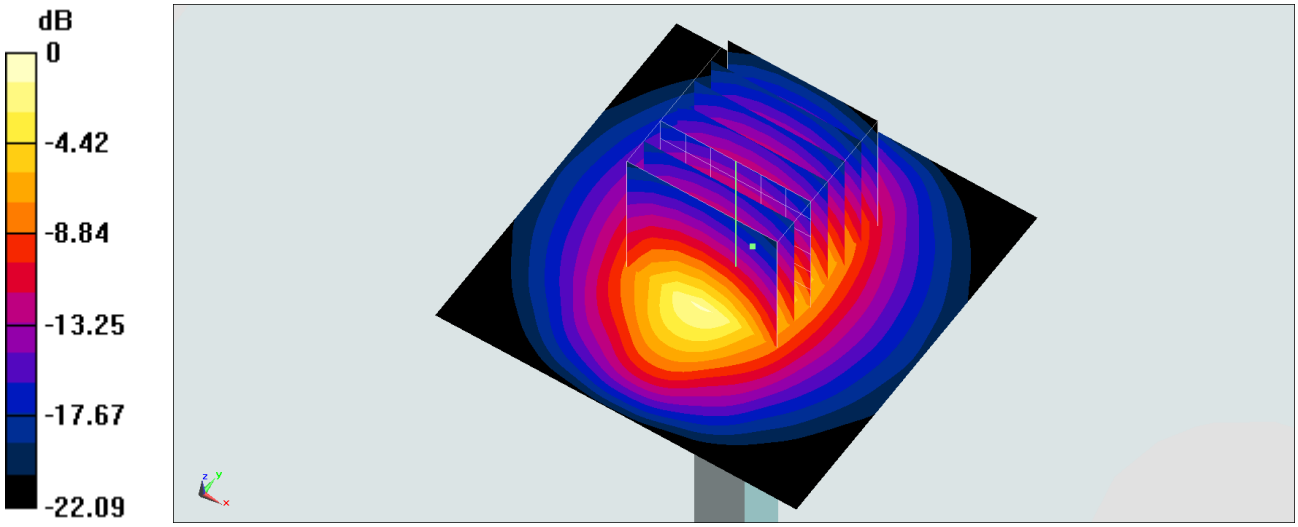

0 dB = 21.9 W/kg = 13.40 dBW/kg

System Check_Body_2450MHz

DUT: D2450V2-736

Communication System: CW; Frequency: 2450 MHz;Duty Cycle: 1:1
Medium: MSL_2450_190304 Medium parameters used: f = 2450 MHz; σ = 2.005 S/m; ε_r = 52.427; ρ = 1000 kg/m^3
Ambient Temperature：23.4 ℃; Liquid Temperature：22.4 ℃

DASY5 Configuration:
- Probe: EX3DV4 - SN3931; ConvF(7.56, 7.56, 7.56) ; Calibrated: 2018/9/27
- Sensor-Surface: 1.4mm (Mechanical Surface Detection)
- Electronics: DAE4 Sn1399; Calibrated: 2018/11/16
- Phantom: SAM_Left; Type: QD000P40CD; Serial: TP:1815
- Measurement SW: DASY52, Version 52.10 (1);SEMCAD X Version 14.6.11 (7439)

Pin=250mW/Area Scan (61x61x1): Interpolated grid: dx=1.200 mm, dy=1.200 mm
Maximum value of SAR (interpolated) = 22.4 W/kg

Pin=250mW/Zoom Scan (7x7x7)/Cube 0: Measurement grid: dx=5mm, dy=5mm, dz=5mm
Reference Value = 107.8 V/m; Power Drift = -0.08 dB
Peak SAR (extrapolated) = 26.7 W/kg
SAR(1 g) = 13.1 W/kg; SAR(10 g) = 6.13 W/kg
Maximum value of SAR (measured) = 21.6 W/kg

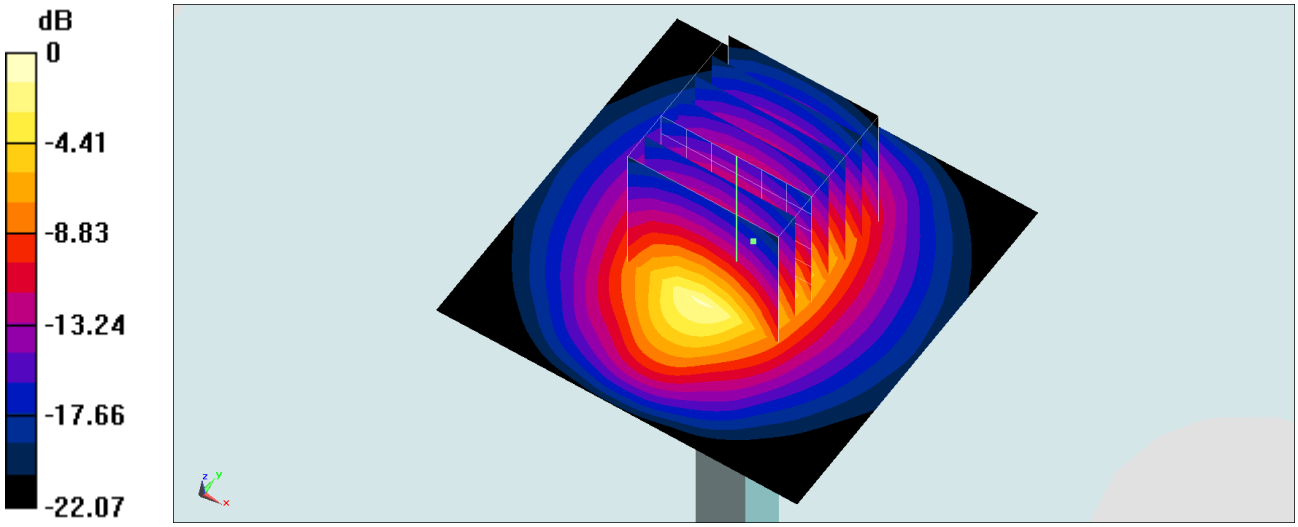

0 dB = 21.6 W/kg = 13.34 dBW/kg

System Check_Body_2600MHz

DUT: D2600V2-1008

Communication System: CW; Frequency: 2600 MHz;Duty Cycle: 1:1
Medium: MSL_2600_190226 Medium parameters used: f = 2600 MHz; σ = 2.133 S/m; ε_r = 52.647; ρ = 1000 kg/m^3
Ambient Temperature：23.7 ℃; Liquid Temperature：22.7 ℃

DASY5 Configuration:
- Probe: EX3DV4 - SN3931; ConvF(7.43, 7.43, 7.43) ; Calibrated: 2018/9/27
- Sensor-Surface: 1.4mm (Mechanical Surface Detection)
- Electronics: DAE4 Sn1399; Calibrated: 2018/11/16
- Phantom: SAM_Left; Type: QD000P40CD; Serial: TP:1815
- Measurement SW: DASY52, Version 52.10 (1);SEMCAD X Version 14.6.11 (7439)

Pin=250mW/Area Scan (61x61x1): Interpolated grid: dx=1.200 mm, dy=1.200 mm
Maximum value of SAR (interpolated) = 21.1 W/kg

Pin=250mW/Zoom Scan (7x7x7)/Cube 0: Measurement grid: dx=5mm, dy=5mm, dz=5mm
Reference Value = 99.37 V/m; Power Drift = 0.07 dB
Peak SAR (extrapolated) = 28.5 W/kg
SAR(1 g) = 13.5 W/kg; SAR(10 g) = 6.05 W/kg
Maximum value of SAR (measured) = 21.0 W/kg

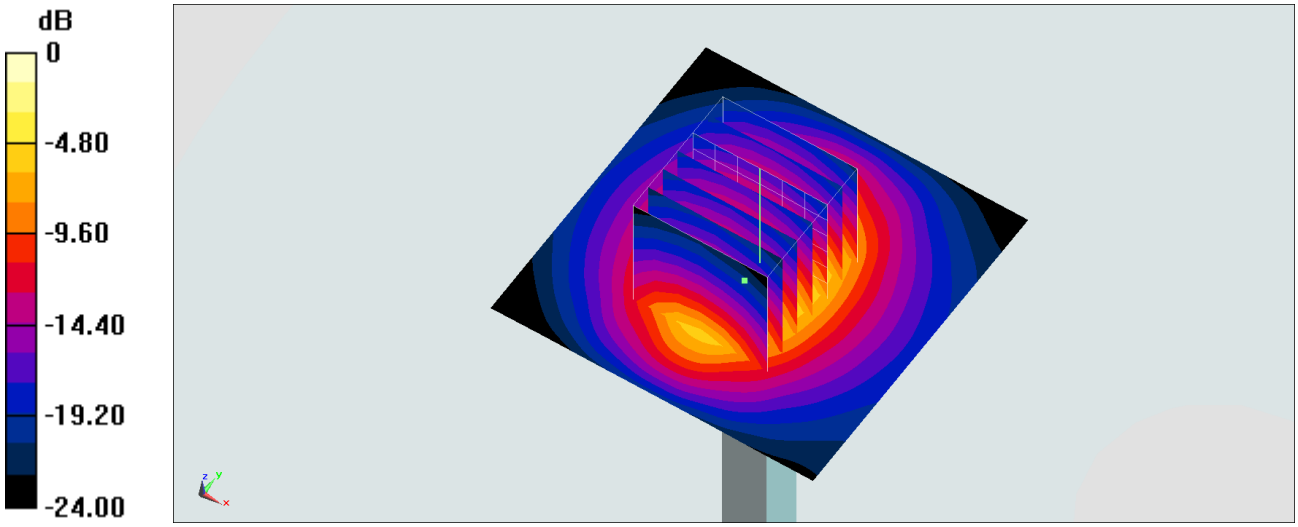

0 dB = 21.0 W/kg = 13.22 dBW/kg

System Check_Body_5250MHz

DUT: D5GHzV2-1006

Communication System: CW; Frequency: 5250 MHz;Duty Cycle: 1:1
Medium: MSL_5G_190217 Medium parameters used : f = 5250 MHz; σ = 5.366 S/m; ε_r = 47.753; ρ = 1000 kg/m^3
Ambient Temperature：23.2 ℃; Liquid Temperature：22.2 ℃

DASY5 Configuration:
- Probe: EX3DV4 - SN3931; ConvF(4.4, 4.4, 4.4) ; Calibrated: 2018/9/27
- Sensor-Surface: 1.4mm (Mechanical Surface Detection)
- Electronics: DAE4 Sn1399; Calibrated: 2018/11/16
- Phantom: SAM_Left; Type: QD000P40CD; Serial: TP:1815
- Measurement SW: DASY52, Version 52.10 (1);SEMCAD X Version 14.6.11 (7439)

Pin=100mW/Area Scan (71x71x1): Interpolated grid: dx=1.000 mm, dy=1.000 mm
Maximum value of SAR (interpolated) = 18.4 W/kg

Pin=100mW/Zoom Scan (7x7x7)/Cube 0: Measurement grid: dx=4mm, dy=4mm, dz=1.4mm
Reference Value = 68.32 V/m; Power Drift = -0.05 dB
Peak SAR (extrapolated) = 32.1 W/kg
SAR(1 g) = 7.76 W/kg; SAR(10 g) = 2.17 W/kg
Maximum value of SAR (measured) = 19.9 W/kg

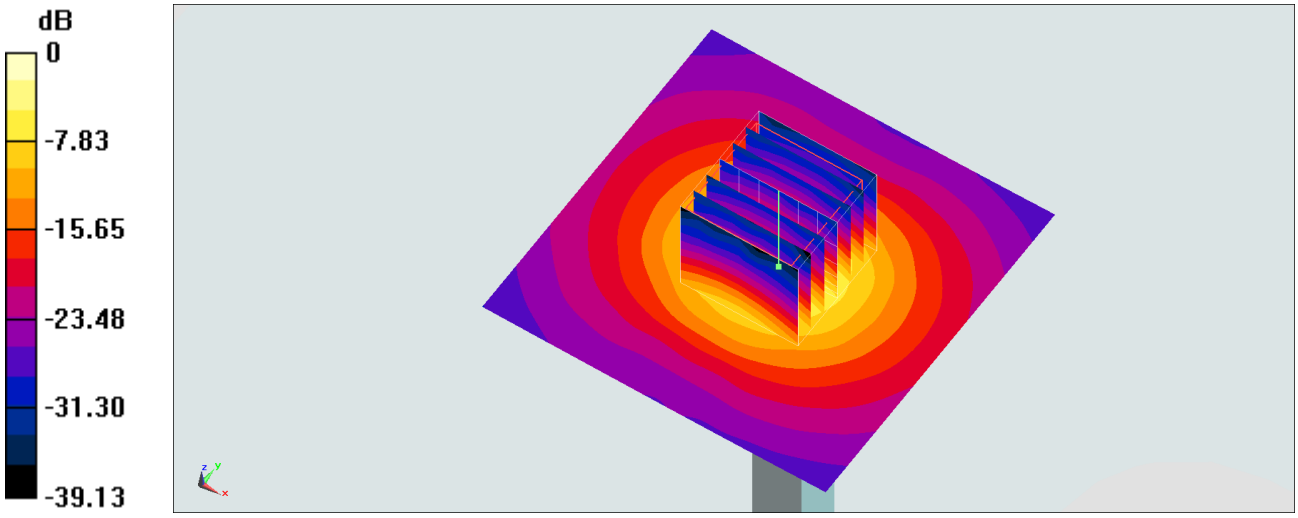

0 dB = 19.9 W/kg = 12.99 dBW/kg

System Check_Body_5250MHz

DUT: D5GHzV2-1006

Communication System: CW; Frequency: 5250 MHz;Duty Cycle: 1:1
Medium: MSL_5G_190221 Medium parameters used : f = 5250 MHz; σ = 5.484 S/m; ε_r = 48.861; ρ = 1000 kg/m^3
Ambient Temperature：23.1 ℃; Liquid Temperature：22.1 ℃

DASY5 Configuration:
- Probe: EX3DV4 - SN3931; ConvF(4.4, 4.4, 4.4) ; Calibrated: 2018/9/27
- Sensor-Surface: 1.4mm (Mechanical Surface Detection)
- Electronics: DAE4 Sn1399; Calibrated: 2018/11/16
- Phantom: SAM_Left; Type: QD000P40CD; Serial: TP:1815
- Measurement SW: DASY52, Version 52.10 (1);SEMCAD X Version 14.6.11 (7439)

Pin=100mW/Area Scan (71x71x1): Interpolated grid: dx=1.000 mm, dy=1.000 mm
Maximum value of SAR (interpolated) = 19.4 W/kg

Pin=100mW/Zoom Scan (7x7x7)/Cube 0: Measurement grid: dx=4mm, dy=4mm, dz=1.4mm
Reference Value = 68.63 V/m; Power Drift = -0.03 dB
Peak SAR (extrapolated) = 29.9 W/kg
SAR(1 g) = 7.83 W/kg; SAR(10 g) = 2.13 W/kg
Maximum value of SAR (measured) = 18.6 W/kg

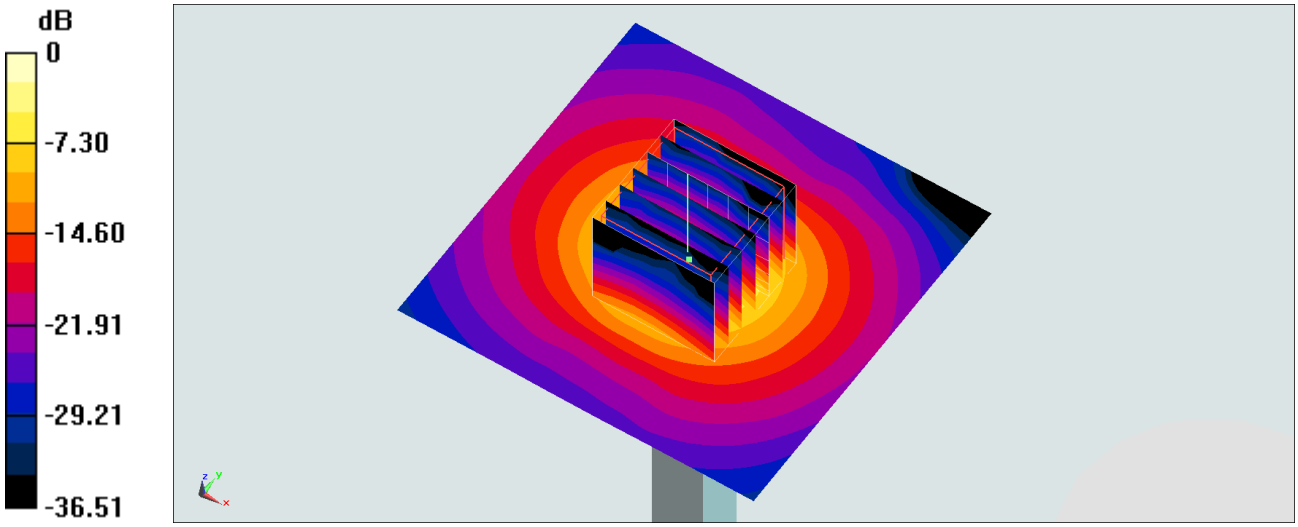

0 dB = 18.6 W/kg = 12.70 dBW/kg

System Check_Body_5600MHz

DUT: D5GHzV2-1006

Communication System: CW; Frequency: 5600 MHz;Duty Cycle: 1:1
Medium: MSL_5G_190217 Medium parameters used: f = 5600 MHz; σ = 5.821 S/m; ε_r = 47.178; ρ = 1000 kg/m^3
Ambient Temperature：23.2 ℃; Liquid Temperature：22.2 ℃

DASY5 Configuration:
- Probe: EX3DV4 - SN3931; ConvF(3.82, 3.82, 3.82) ; Calibrated: 2018/9/27
- Sensor-Surface: 1.4mm (Mechanical Surface Detection)
- Electronics: DAE4 Sn1399; Calibrated: 2018/11/16
- Phantom: SAM_Left; Type: QD000P40CD; Serial: TP:1815
- Measurement SW: DASY52, Version 52.10 (1);SEMCAD X Version 14.6.11 (7439)

Pin=100mW/Area Scan (71x71x1): Interpolated grid: dx=1.000 mm, dy=1.000 mm
Maximum value of SAR (interpolated) = 20.8 W/kg

Pin=100mW/Zoom Scan (7x7x7)/Cube 0: Measurement grid: dx=4mm, dy=4mm, dz=1.4mm
Reference Value = 69.24 V/m; Power Drift = -0.08 dB
Peak SAR (extrapolated) = 37.7 W/kg
SAR(1 g) = 8.29 W/kg; SAR(10 g) = 2.29 W/kg
Maximum value of SAR (measured) = 21.9 W/kg

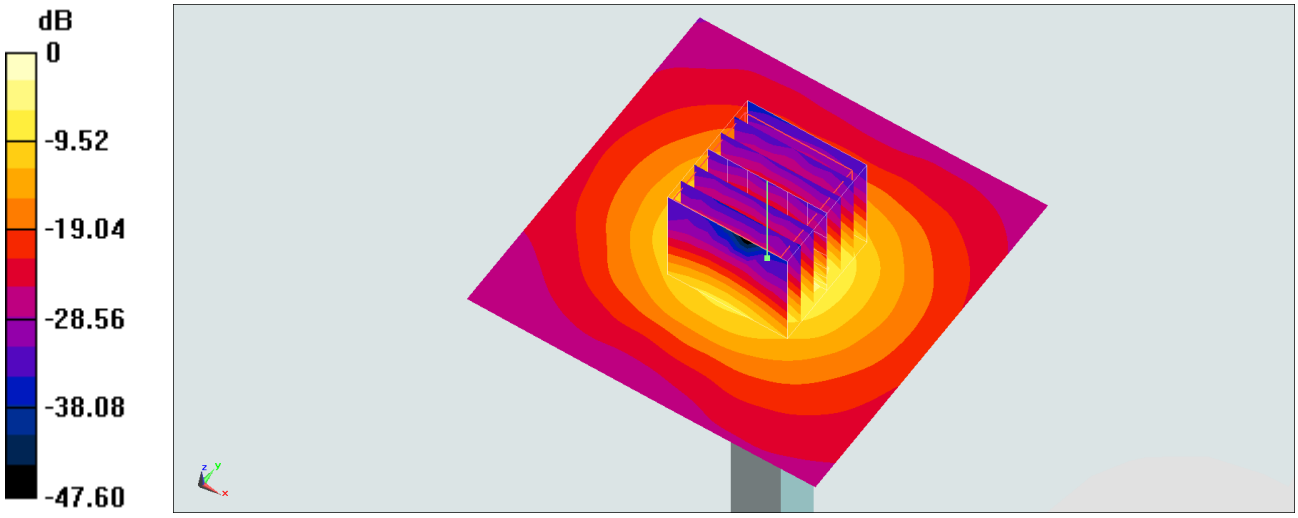

0 dB = 21.9 W/kg = 13.40 dBW/kg

System Check_Body_5600MHz

DUT: D5GHzV2-1006

Communication System: CW; Frequency: 5600 MHz;Duty Cycle: 1:1
Medium: MSL_5G_190221 Medium parameters used: f = 5600 MHz; σ = 5.957 S/m; ε_r = 48.295; ρ = 1000 kg/m^3
Ambient Temperature：23.1 ℃; Liquid Temperature：22.1 ℃

DASY5 Configuration:
- Probe: EX3DV4 - SN3931; ConvF(3.82, 3.82, 3.82) ; Calibrated: 2018/9/27
- Sensor-Surface: 1.4mm (Mechanical Surface Detection)
- Electronics: DAE4 Sn1399; Calibrated: 2018/11/16
- Phantom: SAM_Left; Type: QD000P40CD; Serial: TP:1815
- Measurement SW: DASY52, Version 52.10 (1);SEMCAD X Version 14.6.11 (7439)

Pin=100mW/Area Scan (71x71x1): Interpolated grid: dx=1.000 mm, dy=1.000 mm
Maximum value of SAR (interpolated) = 20.2 W/kg

Pin=100mW/Zoom Scan (7x7x7)/Cube 0: Measurement grid: dx=4mm, dy=4mm, dz=1.4mm
Reference Value = 67.55 V/m; Power Drift = 0.02 dB
Peak SAR (extrapolated) = 36.5 W/kg
SAR(1 g) = 8.15 W/kg; SAR(10 g) = 2.28 W/kg
Maximum value of SAR (measured) = 21.4 W/kg

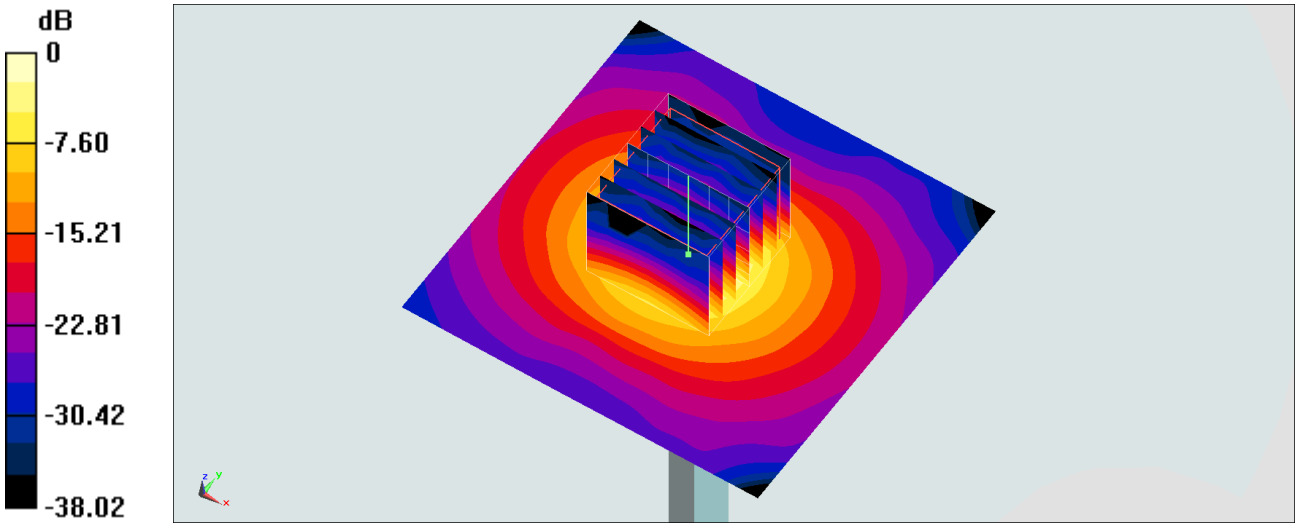

0 dB = 21.4 W/kg = 13.30 dBW/kg

System Check_Body_5750MHz

DUT: D5GHzV2-1006

Communication System: CW; Frequency: 5750 MHz;Duty Cycle: 1:1
Medium: MSL_5G_190217 Medium parameters used: f = 5750 MHz; σ = 6.019 S/m; ε_r = 46.947; ρ = 1000 kg/m^3
Ambient Temperature：23.2 ℃; Liquid Temperature：22.2 ℃

DASY5 Configuration:
- Probe: EX3DV4 - SN3931; ConvF(4.11, 4.11, 4.11) ; Calibrated: 2018/9/27
- Sensor-Surface: 1.4mm (Mechanical Surface Detection)
- Electronics: DAE4 Sn1399; Calibrated: 2018/11/16
- Phantom: SAM_Left; Type: QD000P40CD; Serial: TP:1815
- Measurement SW: DASY52, Version 52.10 (1);SEMCAD X Version 14.6.11 (7439)

Pin=100mW/Area Scan (71x71x1): Interpolated grid: dx=1.000 mm, dy=1.000 mm
Maximum value of SAR (interpolated) = 18.7 W/kg

Pin=100mW/Zoom Scan (7x7x7)/Cube 0: Measurement grid: dx=4mm, dy=4mm, dz=1.4mm
Reference Value = 65.38 V/m; Power Drift = -0.09 dB
Peak SAR (extrapolated) = 34.7 W/kg
SAR(1 g) = 7.35 W/kg; SAR(10 g) = 2.05 W/kg
Maximum value of SAR (measured) = 19.7 W/kg

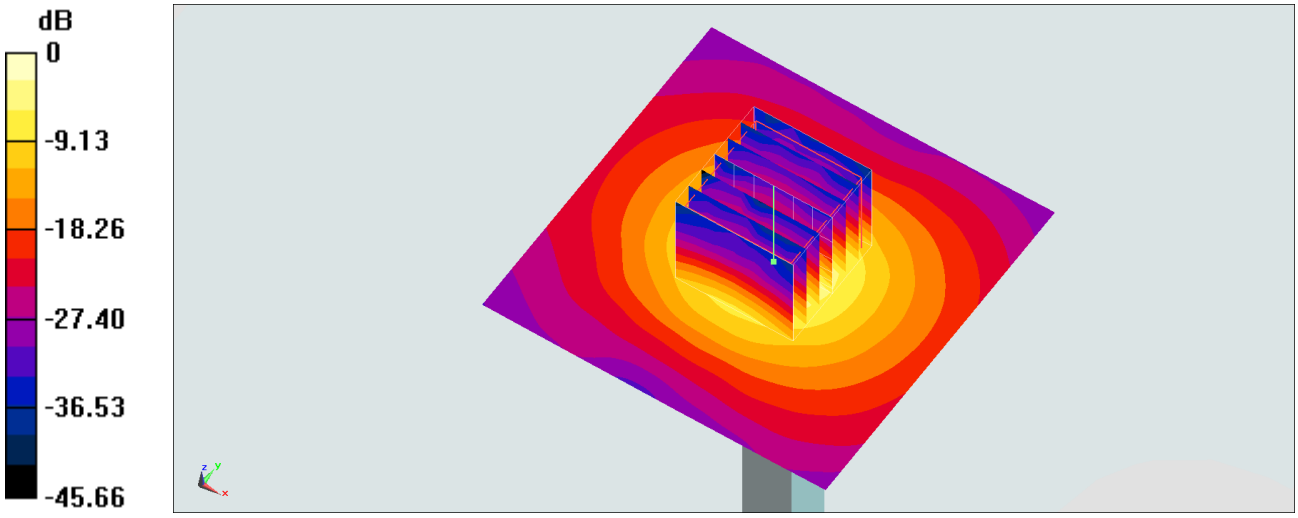

0 dB = 19.7 W/kg = 12.94 dBW/kg

System Check_Body_5750MHz

DUT: D5GHzV2-1006

Communication System: CW; Frequency: 5750 MHz;Duty Cycle: 1:1
Medium: MSL_5G_190221 Medium parameters used: f = 5750 MHz; σ = 6.175 S/m; ε_r = 48.079; ρ = 1000 kg/m^3
Ambient Temperature：23.1 ℃; Liquid Temperature：22.1 ℃

DASY5 Configuration:
- Probe: EX3DV4 - SN3931; ConvF(4.11, 4.11, 4.11) ; Calibrated: 2018/9/27
- Sensor-Surface: 1.4mm (Mechanical Surface Detection)
- Electronics: DAE4 Sn1399; Calibrated: 2018/11/16
- Phantom: SAM_Left; Type: QD000P40CD; Serial: TP:1815
- Measurement SW: DASY52, Version 52.10 (1);SEMCAD X Version 14.6.11 (7439)

Pin=100mW/Area Scan (71x71x1): Interpolated grid: dx=1.000 mm, dy=1.000 mm
Maximum value of SAR (interpolated) = 20.2 W/kg

Pin=100mW/Zoom Scan (7x7x7)/Cube 0: Measurement grid: dx=4mm, dy=4mm, dz=1.4mm
Reference Value = 66.18 V/m; Power Drift = -0.02 dB
Peak SAR (extrapolated) = 35.3 W/kg
SAR(1 g) = 7.86 W/kg; SAR(10 g) = 2.06 W/kg
Maximum value of SAR (measured) = 20.3 W/kg

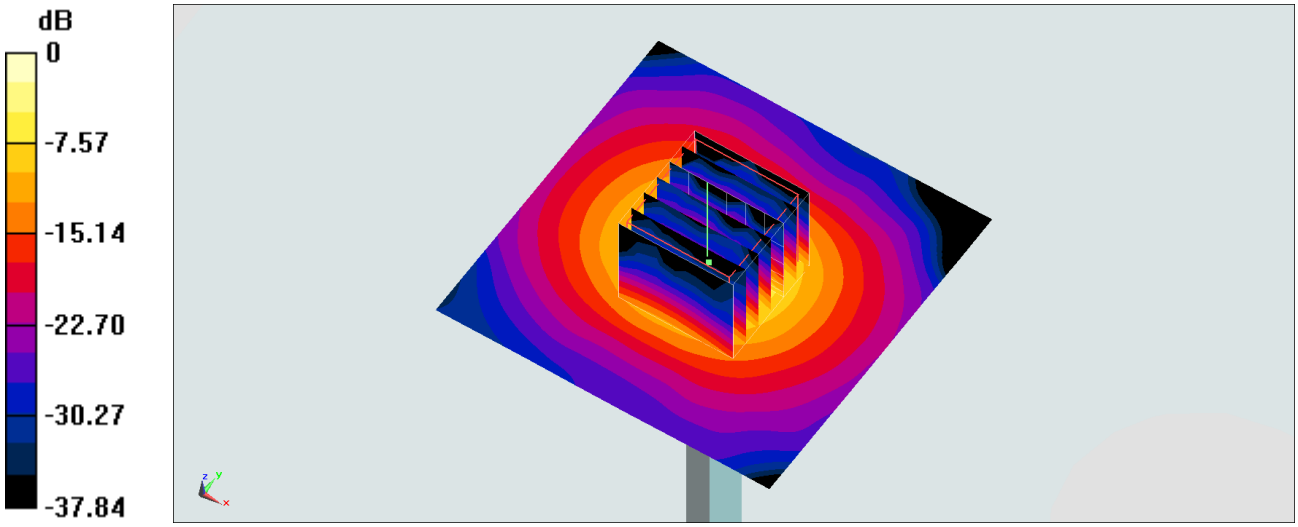

0 dB = 20.3 W/kg = 13.07 dBW/kg