Test Laboratory: Sporton International Inc. SAR/HAC Testing Lab Date: 2018/9/11

## System Check_Head_750MHz

**DUT: D750V3-1107**

Communication System: CW; Frequency: 750 MHz;Duty Cycle: 1:1
Medium: HSL_750_180911 Medium parameters used: f = 750 MHz; $\sigma$ = 0.892 S/m; $\varepsilon_r$ = 40.486; $\rho$ = 1000 kg/m$^3$
Ambient Temperature：23.2 ℃; Liquid Temperature：22.2 ℃

DASY5 Configuration:
- Probe: ES3DV3 - SN3169; ConvF(6.56, 6.56, 6.56); Calibrated: 2018/5/28
- Sensor-Surface: 3mm (Mechanical Surface Detection)
- Electronics: DAE3 Sn495; Calibrated: 2018/5/24
- Phantom: SAM-Right; Type: SAM; Serial: TP-1503
- Measurement SW: DASY52, Version 52.10 (1);SEMCAD X Version 14.6.11 (7439)

**Pin=250mW/Area Scan (61x61x1):** Interpolated grid: dx=1.500 mm, dy=1.500 mm
Maximum value of SAR (interpolated) = 2.40 W/kg

**Pin=250mW/Zoom Scan (5x5x7)/Cube 0:** Measurement grid: dx=8mm, dy=8mm, dz=5mm
Reference Value = 52.75 V/m; Power Drift = -0.08 dB
Peak SAR (extrapolated) = 3.04 W/kg
**SAR(1 g) = 2.11 W/kg; SAR(10 g) = 1.42 W/kg**
Maximum value of SAR (measured) = 2.44 W/kg

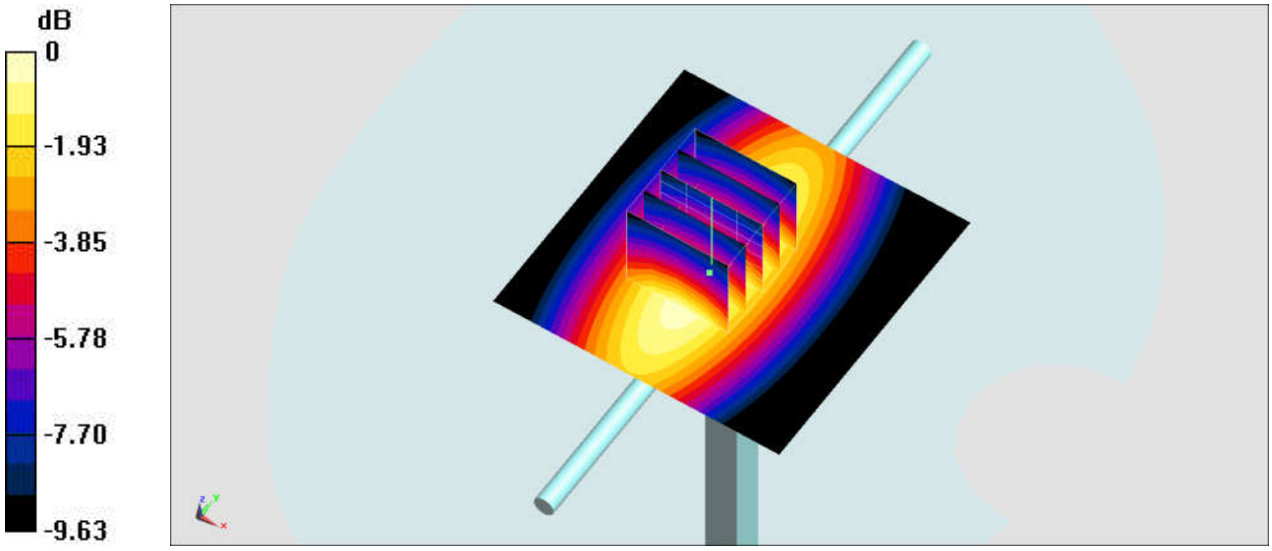


0 dB = 2.44 W/kg = 3.87 dBW/kg

## System Check_Body_750MHz

### DUT: D750V3-1107

Communication System: CW ; Frequency: 750 MHz;Duty Cycle: 1:1
Medium: MSL_750_180912 Medium parameters used: f = 750 MHz; $\sigma$ = 0.972 S/m; $\varepsilon_r$ = 54.183; $\rho$ = 1000 kg/m$^3$
Ambient Temperature：23.6 ℃; Liquid Temperature：22.6 ℃

DASY5 Configuration:
- Probe: EX3DV4 - SN3976; ConvF(10.37, 10.37, 10.37); Calibrated: 2018/1/23
- Sensor-Surface: 1.4mm (Mechanical Surface Detection)
- Electronics: DAE4 Sn1424; Calibrated: 2018/1/18
- Phantom: SAM_Right; Type: SAM; Serial: TP:1479
- Measurement SW: DASY52, Version 52.10 (1);SEMCAD X Version 14.6.11 (7439)

**Pin=250mW/Area Scan (61x61x1):** Interpolated grid: dx=1.500 mm, dy=1.500 mm
Maximum value of SAR (interpolated) = 2.99 W/kg

**Pin=250mW/Zoom Scan (5x5x7)/Cube 0:** Measurement grid: dx=8mm, dy=8mm, dz=5mm
Reference Value = 57.80 V/m; Power Drift = -0.00 dB
Peak SAR (extrapolated) = 3.42 W/kg
**SAR(1 g) = 2.25 W/kg; SAR(10 g) = 1.47 W/kg**
Maximum value of SAR (measured) = 3.02 W/kg

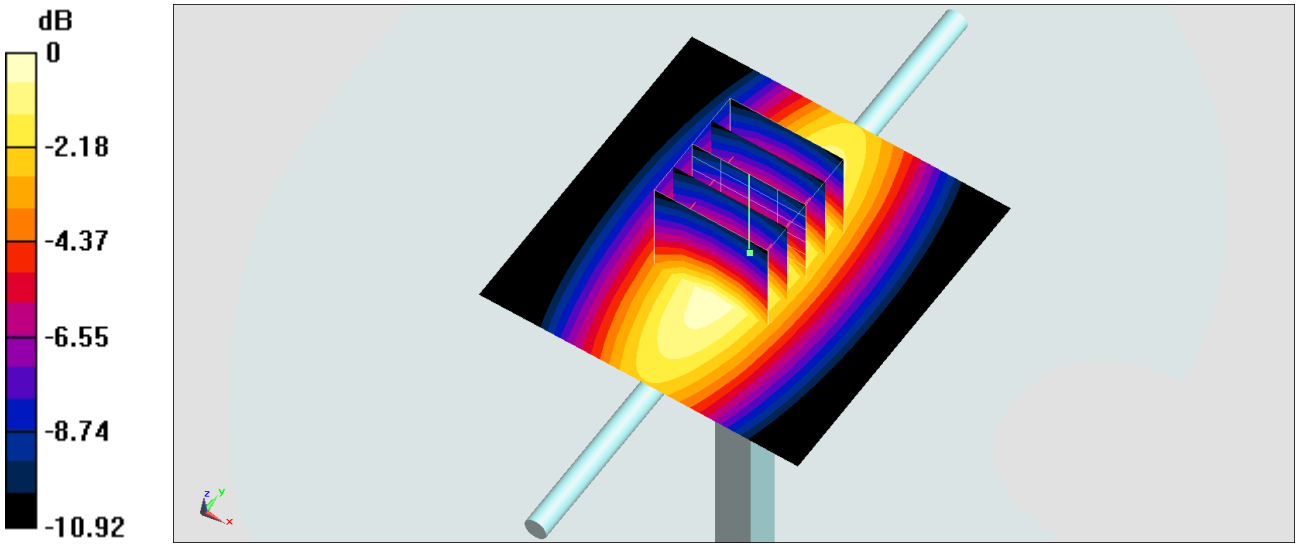


0 dB = 3.02 W/kg = 4.80 dBW/kg

## System Check_Body_750MHz

### DUT: D750V3-1107

Communication System: CW; Frequency: 750 MHz;Duty Cycle: 1:1
Medium: MSL_750_180913 Medium parameters used: f = 750 MHz; $\sigma$ = 0.975 S/m; $\varepsilon_r$ = 54.274; $\rho$ = 1000 kg/m$^3$
Ambient Temperature：23.2 ℃; Liquid Temperature：22.2 ℃

DASY5 Configuration:
- Probe: ES3DV3 - SN3270;ConvF(6.31, 6.31, 6.31) ;Calibrated: 2017/9/25
- Sensor-Surface: 3mm (Mechanical Surface Detection)
- Electronics: DAE4 Sn853; Calibrated: 2018/7/24
- Phantom: SAM_Right; Type: QD000P40CD; Serial: TP:1815
- Measurement SW: DASY52, Version 52.10 (1);SEMCAD X Version 14.6.11 (7439)

**Pin=250mW/Area Scan (61x61x1):** Interpolated grid: dx=1.500 mm, dy=1.500 mm
Maximum value of SAR (interpolated) = 2.61 W/kg

**Pin=250mW/Zoom Scan (5x5x7)/Cube 0:** Measurement grid: dx=8mm, dy=8mm, dz=5mm
Reference Value = 50.53 V/m; Power Drift = 0.00 dB
Peak SAR (extrapolated) = 3.16 W/kg
**SAR(1 g) = 2.2 W/kg; SAR(10 g) = 1.49 W/kg**
Maximum value of SAR (measured) = 2.54 W/kg

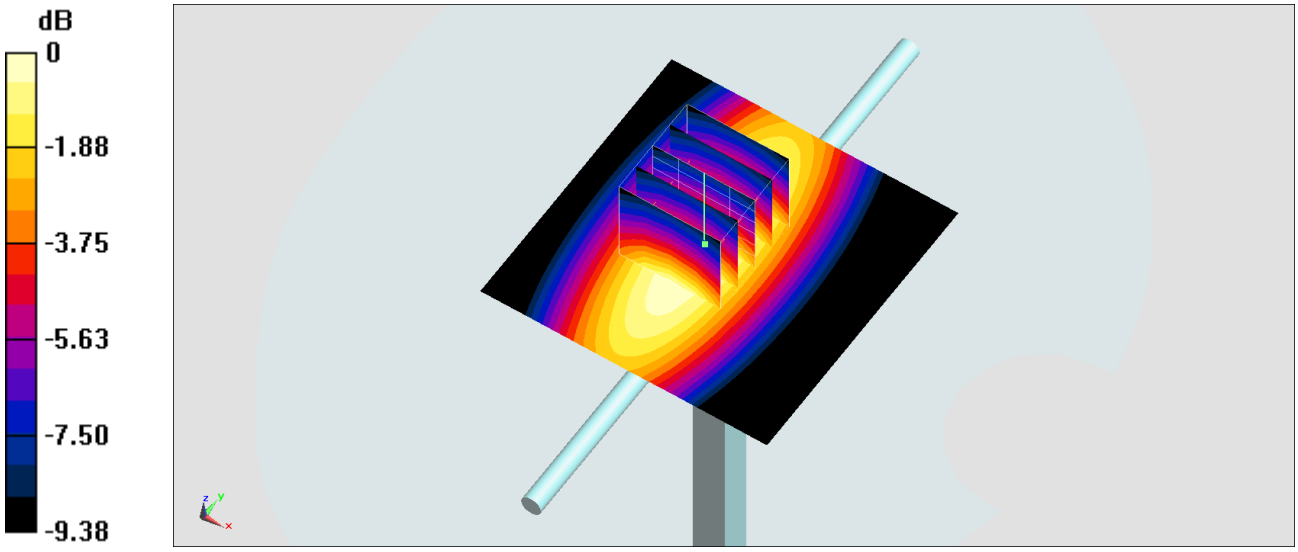


0 dB = 2.54 W/kg = 4.05 dBW/kg

Test Laboratory: Sporton International Inc. SAR/HAC Testing Lab Date: 2018/9/11

## System Check_Head_835MHz

**DUT: D835V2-4d167**

Communication System: CW; Frequency: 835 MHz;Duty Cycle: 1:1
Medium: HSL_850_180911 Medium parameters used: f = 835 MHz; $\sigma$ = 0.901 S/m; $\varepsilon_r$ = 41.759; $\rho$ = 1000 kg/m$^3$
Ambient Temperature：23.3 ℃; Liquid Temperature：22.3 ℃

DASY5 Configuration:
- Probe: ES3DV3 - SN3169; ConvF(6.39, 6.39, 6.39) ; Calibrated: 2018/5/28
- Sensor-Surface: 3mm (Mechanical Surface Detection)
- Electronics: DAE3 Sn495; Calibrated: 2018/5/24
- Phantom: SAM-Right; Type: SAM; Serial: TP-1503
- Measurement SW: DASY52, Version 52.10 (1);SEMCAD X Version 14.6.11 (7439)

**Pin=250mW/Area Scan (61x61x1):** Interpolated grid: dx=1.500 mm, dy=1.500 mm
Maximum value of SAR (interpolated) = 2.73 W/kg

**Pin=250mW/Zoom Scan (5x5x7)/Cube 0:** Measurement grid: dx=8mm, dy=8mm, dz=5mm
Reference Value = 55.59 V/m; Power Drift = 0.01 dB
Peak SAR (extrapolated) = 3.44 W/kg
**SAR(1 g) = 2.32 W/kg; SAR(10 g) = 1.53 W/kg**
Maximum value of SAR (measured) = 2.71 W/kg

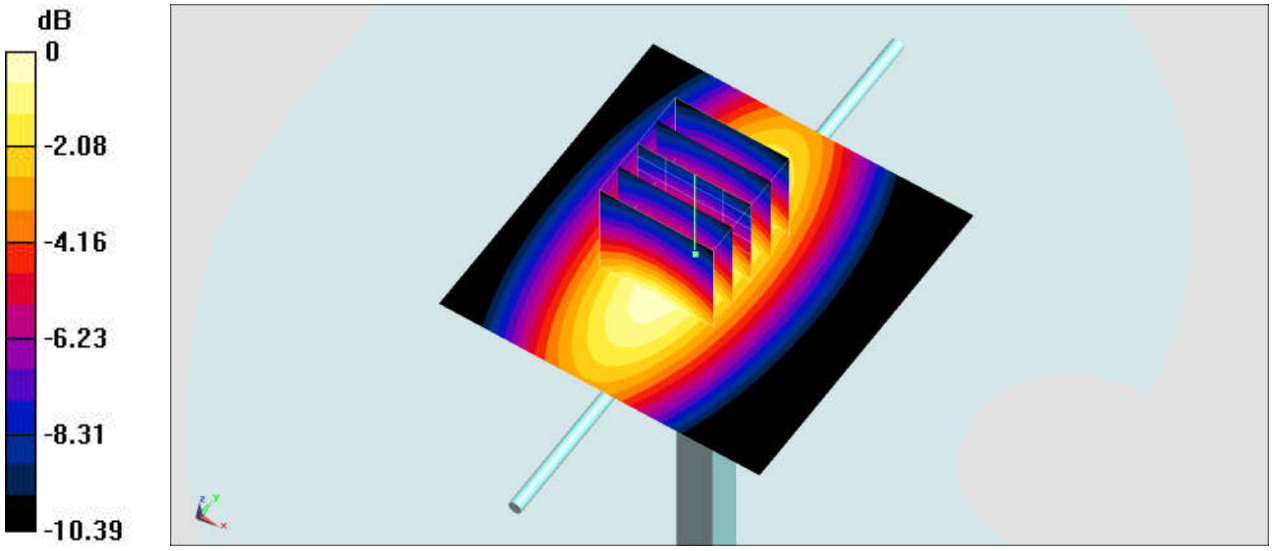


0 dB = 2.71 W/kg = 4.33 dBW/kg

## System Check_Head_835MHz

### DUT: D835V2-4d167

Communication System: CW ; Frequency: 835 MHz;Duty Cycle: 1:1
Medium: HSL_850_180911 Medium parameters used: f = 835 MHz; $\sigma$ = 0.87 S/m; $\varepsilon_r$ = 41.224; $\rho$ = 1000 kg/m$^3$
Ambient Temperature：23.5 ℃; Liquid Temperature：22.5 ℃

DASY5 Configuration:
- Probe: EX3DV4 - SN3976; ConvF(10.19, 10.19, 10.19) ; Calibrated: 2018/1/23
- Sensor-Surface: 1.4mm (Mechanical Surface Detection)
- Electronics: DAE4 Sn1424; Calibrated: 2018/1/18
- Phantom: SAM_Left; Type: QD000P40CD; Serial: TP:1477
- Measurement SW: DASY52, Version 52.10 (1);SEMCAD X Version 14.6.11 (7439)

**Pin=250mW/Area Scan (61x61x1):** Interpolated grid: dx=1.500 mm, dy=1.500 mm
Maximum value of SAR (interpolated) = 3.22 W/kg

**Pin=250mW/Zoom Scan (5x5x7)/Cube 0:** Measurement grid: dx=8mm, dy=8mm, dz=5mm
Reference Value = 63.03 V/m; Power Drift = -0.14 dB
Peak SAR (extrapolated) = 3.74 W/kg
**SAR(1 g) = 2.41 W/kg; SAR(10 g) = 1.58 W/kg**
Maximum value of SAR (measured) = 3.19 W/kg

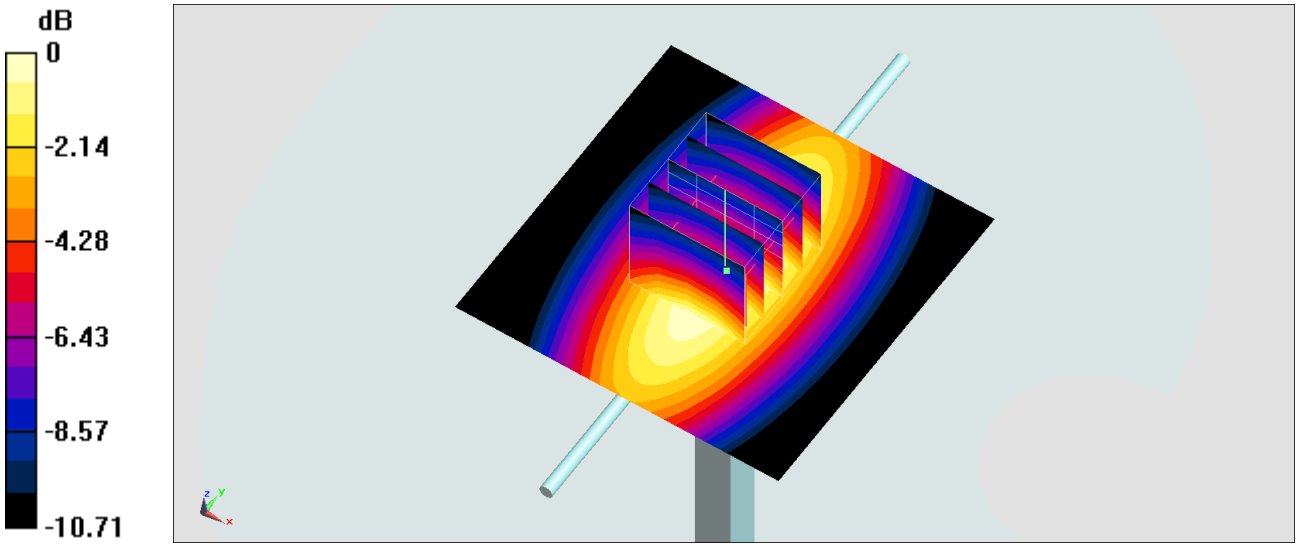


0 dB = 3.19 W/kg = 5.04 dBW/kg

## System Check_Body_835MHz

### DUT: D835V2-4d167

Communication System: CW; Frequency: 835 MHz;Duty Cycle: 1:1
Medium: MSL_850_180912 Medium parameters used: f = 835 MHz; $\sigma$ = 0.962 S/m; $\varepsilon_r$ = 57.39; $\rho$ = 1000 kg/m$^3$
Ambient Temperature：23.6 ℃; Liquid Temperature：22.6 ℃

DASY5 Configuration:
- Probe: EX3DV4 - SN3976; ConvF(10.08, 10.08, 10.08) ; Calibrated: 2018/1/23
- Sensor-Surface: 1.4mm (Mechanical Surface Detection)
- Electronics: DAE4 Sn1424; Calibrated: 2018/1/18
- Phantom: SAM_Right; Type: SAM; Serial: TP:1479
- Measurement SW: DASY52, Version 52.10 (1);SEMCAD X Version 14.6.11 (7439)

**Pin=250mW/Area Scan (61x61x1):** Interpolated grid: dx=1.500 mm, dy=1.500 mm
Maximum value of SAR (interpolated) = 3.31 W/kg

**Pin=250mW/Zoom Scan (5x5x7)/Cube 0:** Measurement grid: dx=8mm, dy=8mm, dz=5mm
Reference Value = 61.22 V/m; Power Drift = -0.03 dB
Peak SAR (extrapolated) = 3.73 W/kg
**SAR(1 g) = 2.48 W/kg; SAR(10 g) = 1.64 W/kg**
Maximum value of SAR (measured) = 3.28 W/kg

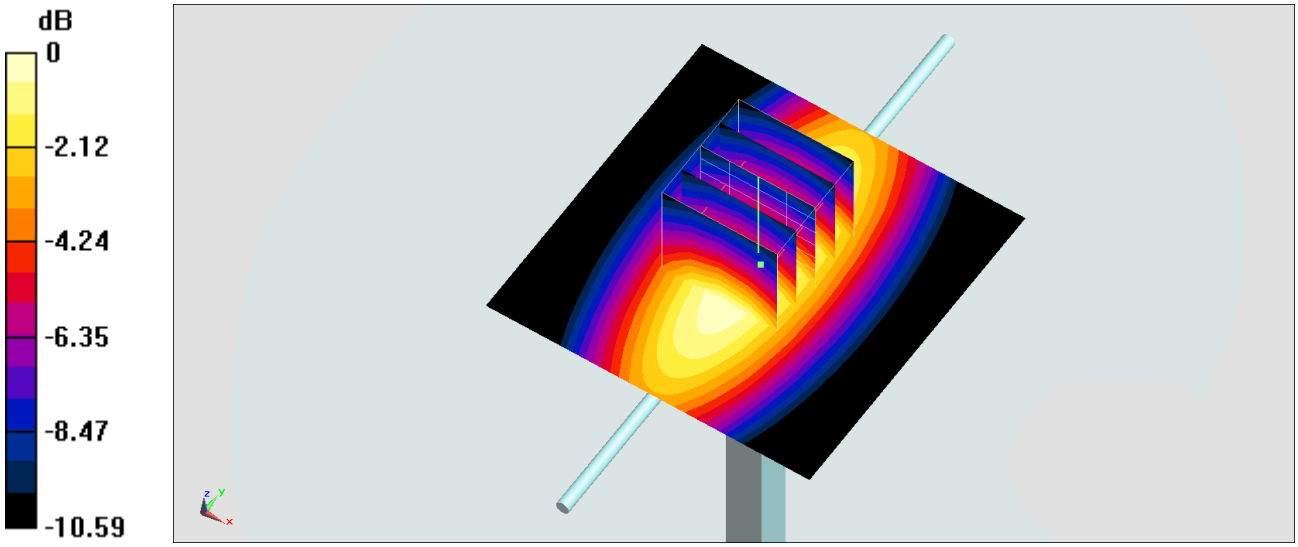


0 dB = 3.28 W/kg = 5.16 dBW/kg

## System Check_Body_835MHz

### DUT: D835V2-4d167

Communication System: CW; Frequency: 835 MHz;Duty Cycle: 1:1
Medium: MSL_850_180913 Medium parameters used: f = 835 MHz; $\sigma$ = 0.996 S/m; $\varepsilon_r$ = 54.269; $\rho$ = 1000 kg/m$^3$
Ambient Temperature：23.2 ℃; Liquid Temperature：22.2 ℃

DASY5 Configuration:
- Probe: ES3DV3 - SN3270;ConvF(6.09, 6.09, 6.09) ;Calibrated: 2017/9/25
- Sensor-Surface: 3mm (Mechanical Surface Detection)
- Electronics: DAE4 Sn853; Calibrated: 2018/7/24
- Phantom: SAM_Right; Type: QD000P40CD; Serial: TP:1815
- Measurement SW: DASY52, Version 52.10 (1);SEMCAD X Version 14.6.11 (7439)

**Pin=250mW/Area Scan (61x61x1):** Interpolated grid: dx=1.500 mm, dy=1.500 mm
Maximum value of SAR (interpolated) = 2.85 W/kg

**Pin=250mW/Zoom Scan (5x5x7)/Cube 0:** Measurement grid: dx=8mm, dy=8mm, dz=5mm
Reference Value = 54.72 V/m; Power Drift = -0.01 dB
Peak SAR (extrapolated) = 3.47 W/kg
**SAR(1 g) = 2.41 W/kg; SAR(10 g) = 1.61 W/kg**
Maximum value of SAR (measured) = 2.80 W/kg

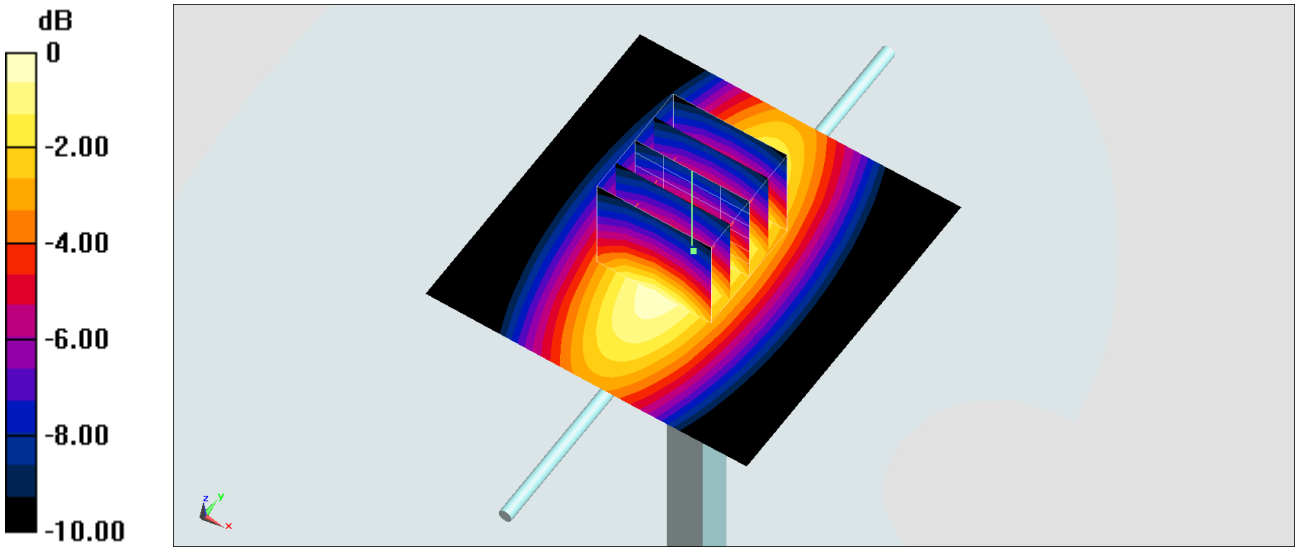


0 dB = 2.80 W/kg = 4.47 dBW/kg

## System Check_Body_835MHz

### DUT: D835V2-4d167

Communication System: CW; Frequency: 835 MHz;Duty Cycle: 1:1
Medium: MSL_850_180920 Medium parameters used: f = 835 MHz; $\sigma$ = 0.968 S/m; $\varepsilon_r$ = 52.841; $\rho$ = 1000 kg/m$^3$
Ambient Temperature：23.5 ℃; Liquid Temperature：22.5 ℃

DASY5 Configuration:
- Probe: EX3DV4 - SN7346;ConvF(9.95, 9.95, 9.95) ;Calibrated: 2018/2/28
- Sensor-Surface: 1.4mm (Mechanical Surface Detection)
- Electronics: DAE4 Sn1399; Calibrated: 2017/11/16
- Phantom: SAM_Left; Type: QD000P40CD; Serial: S/N:1801
- Measurement SW: DASY52, Version 52.10 (1); SEMCAD X Version 14.6.11 (7439)

**Pin=250mW/Area Scan (61x61x1):** Interpolated grid: dx=1.500 mm, dy=1.500 mm
Maximum value of SAR (interpolated) = 3.50 W/kg

**Pin=250mW/Zoom Scan (5x5x7)/Cube 0:** Measurement grid: dx=8mm, dy=8mm, dz=5mm
Reference Value = 61.58 V/m; Power Drift = -0.05 dB
Peak SAR (extrapolated) = 3.57 W/kg
**SAR(1 g) = 2.52 W/kg; SAR(10 g) = 1.69 W/kg**
Maximum value of SAR (measured) = 3.24 W/kg

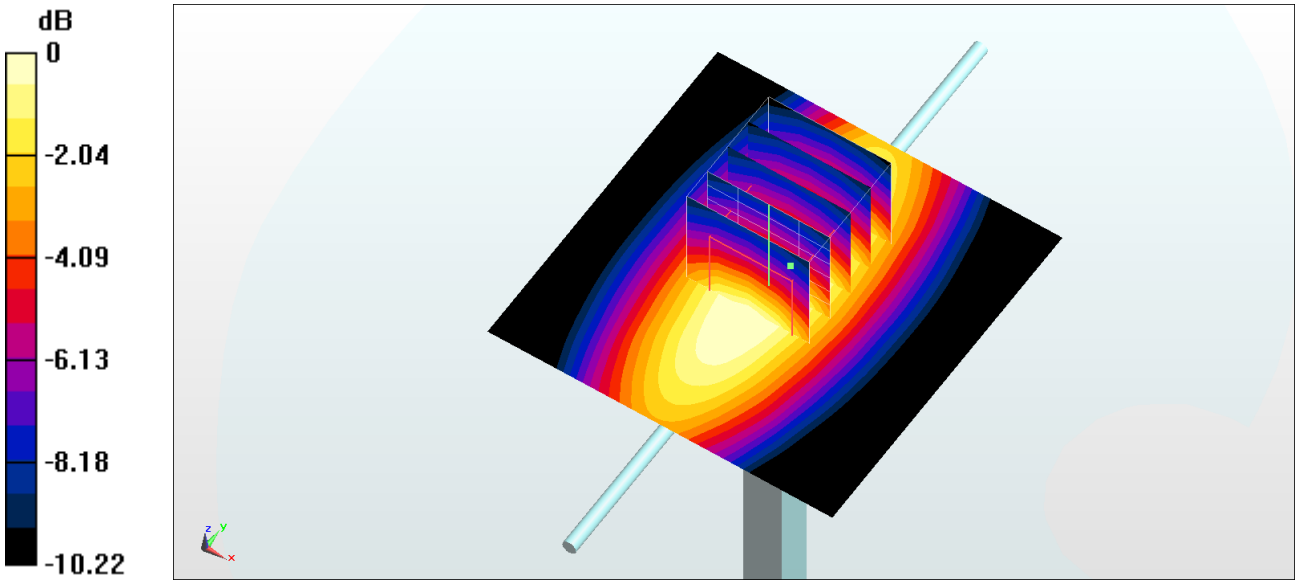


0 dB = 3.24 W/kg = 5.11 dBW/kg

Test Laboratory: Sporton International Inc. SAR/HAC Testing Lab Date: 2018/9/11

## System Check_Head_1750MHz

**DUT: D1750V2-1068**

Communication System: CW; Frequency: 1750 MHz;Duty Cycle: 1:1
Medium: HSL_1750_180911 Medium parameters used: f = 1750 MHz; $\sigma$ = 1.346 S/m; $\varepsilon_r$ = 39.88; $\rho$ = 1000 kg/m$^3$
Ambient Temperature：23.5 ℃; Liquid Temperature：22.5 ℃

DASY5 Configuration:
- Probe: ES3DV3 - SN3169; ConvF(5.48, 5.48, 5.48) ; Calibrated: 2018/5/28
- Sensor-Surface: 3mm (Mechanical Surface Detection)
- Electronics: DAE3 Sn495; Calibrated: 2018/5/24
- Phantom: SAM_Left; Type: QD000P40CD; Serial: TP:1431
- Measurement SW: DASY52, Version 52.10 (1);SEMCAD X Version 14.6.11 (7439)

**Pin=250mW/Area Scan (61x61x1):** Interpolated grid: dx=1.500 mm, dy=1.500 mm
Maximum value of SAR (interpolated) = 11.1 W/kg

**Pin=250mW/Zoom Scan (5x5x7)/Cube 0:** Measurement grid: dx=8mm, dy=8mm, dz=5mm
Reference Value = 91.90 V/m; Power Drift = 0.11 dB
Peak SAR (extrapolated) = 15.1 W/kg
**SAR(1 g) = 8.45 W/kg; SAR(10 g) = 4.51 W/kg**
Maximum value of SAR (measured) = 10.5 W/kg

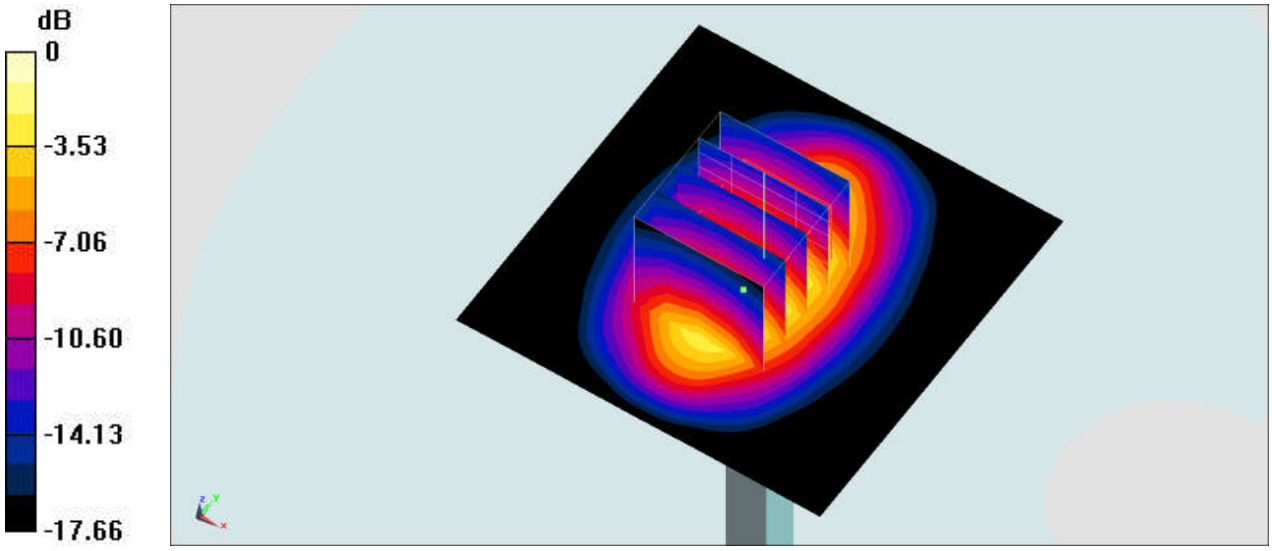


0 dB = 10.5 W/kg = 10.21 dBW/kg

Test Laboratory: Sporton International Inc. SAR/HAC Testing Lab Date: 2018/9/13

## System Check_Body_1750MHz

**DUT: D1750V2-1068**

Communication System: CW; Frequency: 1750 MHz;Duty Cycle: 1:1
Medium: MSL_1750_180913 Medium parameters used: f = 1750 MHz; $\sigma$ = 1.444 S/m; $\varepsilon_r$ = 53.406; $\rho$ = 1000 kg/m$^3$
Ambient Temperature：23.9 ℃; Liquid Temperature：22.9 ℃

DASY5 Configuration:
- Probe: ES3DV3 - SN3169; ConvF(5.06, 5.06, 5.06) ; Calibrated: 2018/5/28
- Sensor-Surface: 3mm (Mechanical Surface Detection)
- Electronics: DAE3 Sn495; Calibrated: 2018/5/24
- Phantom: SAM_Left; Type: QD000P40CD; Serial: TP:1431
- Measurement SW: DASY52, Version 52.10 (1);SEMCAD X Version 14.6.11 (7439)

**Pin=250mW/Area Scan (61x61x1):** Interpolated grid: dx=1.500 mm, dy=1.500 mm
Maximum value of SAR (interpolated) = 11.4 W/kg

**Pin=250mW/Zoom Scan (5x5x7)/Cube 0:** Measurement grid: dx=8mm, dy=8mm, dz=5mm
Reference Value = 91.21 V/m; Power Drift = 0.07 dB
Peak SAR (extrapolated) = 15.7 W/kg
**SAR(1 g) = 9.19 W/kg; SAR(10 g) = 5.01 W/kg**
Maximum value of SAR (measured) = 10.8 W/kg

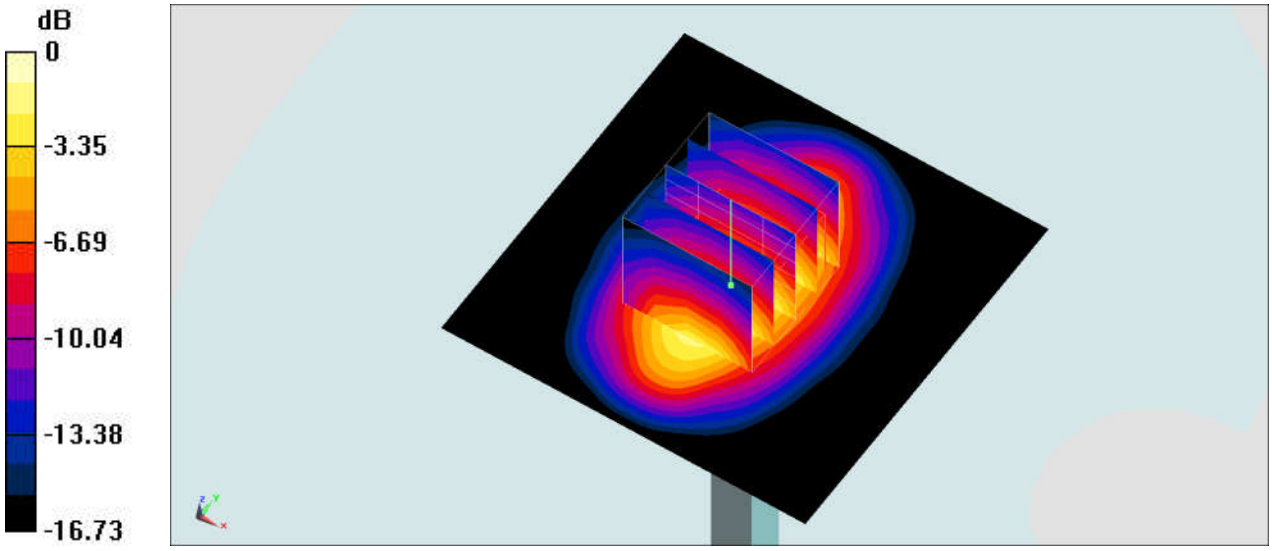


0 dB = 10.8 W/kg = 10.33 dBW/kg

# System Check_Body_1750MHz

## DUT: D1750V2-1068

Communication System: CW; Frequency: 1750 MHz;Duty Cycle: 1:1
Medium: MSL_1750_180918 Medium parameters used: f = 1750 MHz; $\sigma$ = 1.434 S/m; $\varepsilon_r$ = 55.764; $\rho$ = 1000 kg/m$^3$
Ambient Temperature：23.2 ℃; Liquid Temperature：22.2 ℃

DASY5 Configuration
- Probe: EX3DV4 - SN3976;ConvF(8.36, 8.36, 8.36) ;Calibrated: 2018/1/23
- Sensor-Surface: 1.4mm (Mechanical Surface Detection)
- Electronics: DAE4 Sn1424; Calibrated: 2018/1/18
- Phantom: SAM_Right; Type: QD000P40CD; Serial: S/N:1796
- Measurement SW: DASY52, Version 52.10 (1); SEMCAD X Version 14.6.11 (7439)

**Pin=250mW/Area Scan (61x61x1):** Interpolated grid: dx=1.500 mm, dy=1.500 mm
Maximum value of SAR (interpolated) = 13.6 W/kg

**Pin=250mW/Zoom Scan (5x5x7)/Cube 0:** Measurement grid: dx=8mm, dy=8mm, dz=5mm
Reference Value = 97.65 V/m; Power Drift = 0.13 dB
Peak SAR (extrapolated) = 16.3 W/kg
**SAR(1 g) = 9.18 W/kg; SAR(10 g) = 4.91 W/kg**
Maximum value of SAR (measured) = 13.8 W/kg

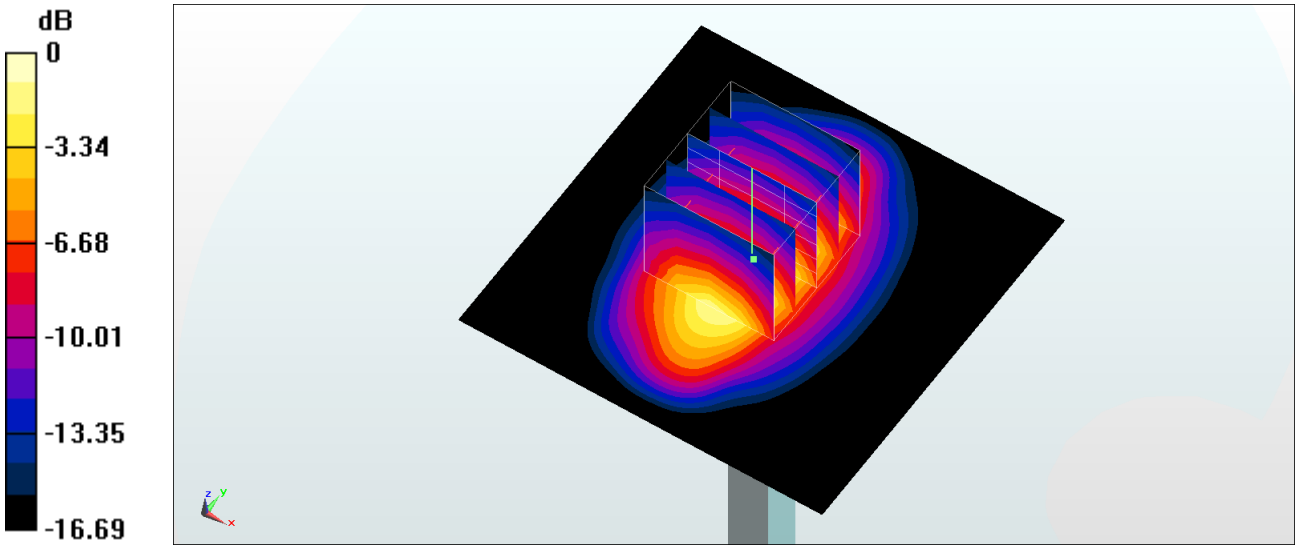


0 dB = 13.8 W/kg = 11.40 dBW/kg

# System Check_Body_1750MHz

## DUT: D1750V2-1068

Communication System: CW; Frequency: 1750 MHz;Duty Cycle: 1:1
Medium: MSL_1750_180918 Medium parameters used: f = 1750 MHz; $\sigma$ = 1.434 S/m; $\varepsilon_r$ = 55.764; $\rho$ = 1000 kg/m$^3$
Ambient Temperature：23.2 ℃; Liquid Temperature：22.2 ℃

DASY5 Configuration
- Probe: EX3DV4 - SN7346;ConvF(8.45, 8.45, 8.45) ;Calibrated: 2018/2/28
- Sensor-Surface: 1.4mm (Mechanical Surface Detection)
- Electronics: DAE4 Sn1399; Calibrated: 2017/11/16
- Phantom: SAM_Right; Type: QD000P40CD; Serial: S/N:1796
- Measurement SW: DASY52, Version 52.10 (1); SEMCAD X Version 14.6.11 (7439)

**Pin=250mW/Area Scan (61x61x1):** Interpolated grid: dx=1.500 mm, dy=1.500 mm
Maximum value of SAR (interpolated) = 11.9 W/kg

**Pin=250mW/Zoom Scan (5x5x7)/Cube 0:** Measurement grid: dx=8mm, dy=8mm, dz=5mm
Reference Value = 84.72 V/m; Power Drift = -0.10 dB
Peak SAR (extrapolated) = 16.2 W/kg
**SAR(1 g) = 9.44 W/kg; SAR(10 g) = 5.17 W/kg**
Maximum value of SAR (measured) = 11.5 W/kg

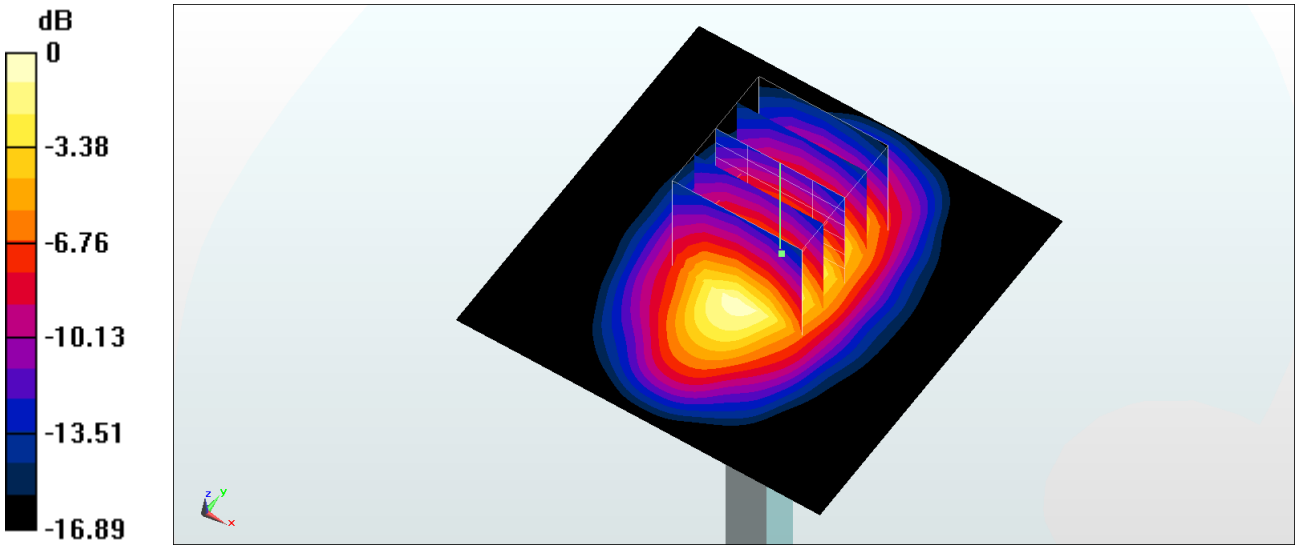


0 dB = 11.5 W/kg = 10.61 dBW/kg

## System Check_Body_1750MHz

### DUT: D1750V2-1068

Communication System: CW; Frequency: 1750 MHz;Duty Cycle: 1:1
Medium: MSL_1750_180929 Medium parameters used: f = 1750 MHz; $\sigma$ = 1.454 S/m; $\varepsilon_r$ = 55.16; $\rho$ = 1000 kg/m$^3$
Ambient Temperature：23.4 ℃; Liquid Temperature：22.4 ℃

DASY5 Configuration:
- Probe: EX3DV4 - SN7306;ConvF(8.22, 8.22, 8.22) ;Calibrated: 2018/7/26
- Sensor-Surface: 1.4mm (Mechanical Surface Detection)
- Electronics: DAE4 Sn917; Calibrated: 2017/12/14
- Phantom: SAM_Right; Type: QD000P40CD; Serial: 1884
- Measurement SW: DASY52, Version 52.10 (1);SEMCAD X Version 14.6.11 (7439)

**Pin=250mW/Area Scan (61x61x1):** Interpolated grid: dx=1.500 mm, dy=1.500 mm
Maximum value of SAR (interpolated) = 14.0 W/kg

**Pin=250mW/Zoom Scan (5x5x7)/Cube 0:** Measurement grid: dx=8mm, dy=8mm, dz=5mm
Reference Value = 101.2 V/m; Power Drift = 0.05 dB
Peak SAR (extrapolated) = 16.4 W/kg
**SAR(1 g) = 9.25 W/kg; SAR(10 g) = 5 W/kg**
Maximum value of SAR (measured) = 13.7 W/kg

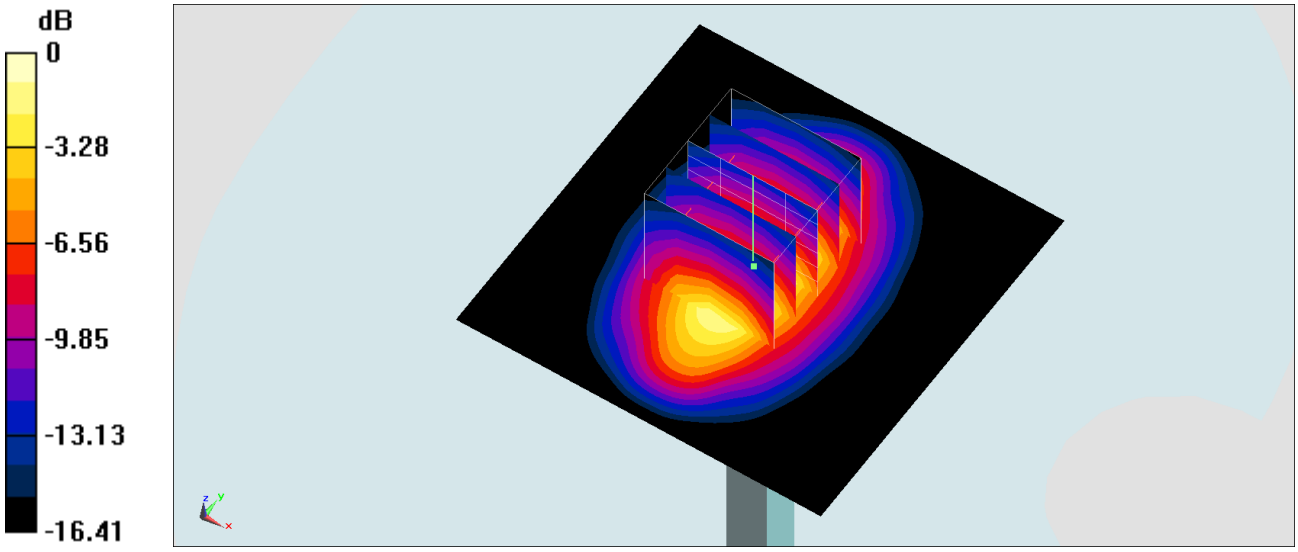


0 dB = 13.7 W/kg = 11.37 dBW/kg

## System Check_Body_1750MHz

### DUT: D1750V2-1068

Communication System: CW; Frequency: 1750 MHz;Duty Cycle: 1:1
Medium: MSL_1750_180930 Medium parameters used: f = 1750 MHz; $\sigma$ = 1.468 S/m; $\varepsilon_r$ = 55.361; $\rho$ = 1000 kg/m$^3$
Ambient Temperature：23.6 ℃; Liquid Temperature：22.6 ℃

DASY5 Configuration:
- Probe: EX3DV4 - SN7346;ConvF(8.45, 8.45, 8.45) ;Calibrated: 2018/2/28
- Sensor-Surface: 1.4mm (Mechanical Surface Detection)
- Electronics: DAE4 Sn910; Calibrated: 2018/6/21
- Phantom: SAM-Left; Type: QD 000 P40 C; Serial: TP-1446
- Measurement SW: DASY52, Version 52.10 (1);SEMCAD X Version 14.6.11 (7439)

**Pin=250mW/Area Scan (61x61x1):** Interpolated grid: dx=1.500 mm, dy=1.500 mm
Maximum value of SAR (interpolated) = 13.7 W/kg

**Pin=250mW/Zoom Scan (5x5x7)/Cube 0:** Measurement grid: dx=8mm, dy=8mm, dz=5mm
Reference Value = 99.38 V/m; Power Drift = -0.06 dB
Peak SAR (extrapolated) = 16.2 W/kg
**SAR(1 g) = 9.15 W/kg; SAR(10 g) = 4.8 W/kg**
Maximum value of SAR (measured) = 13.6 W/kg

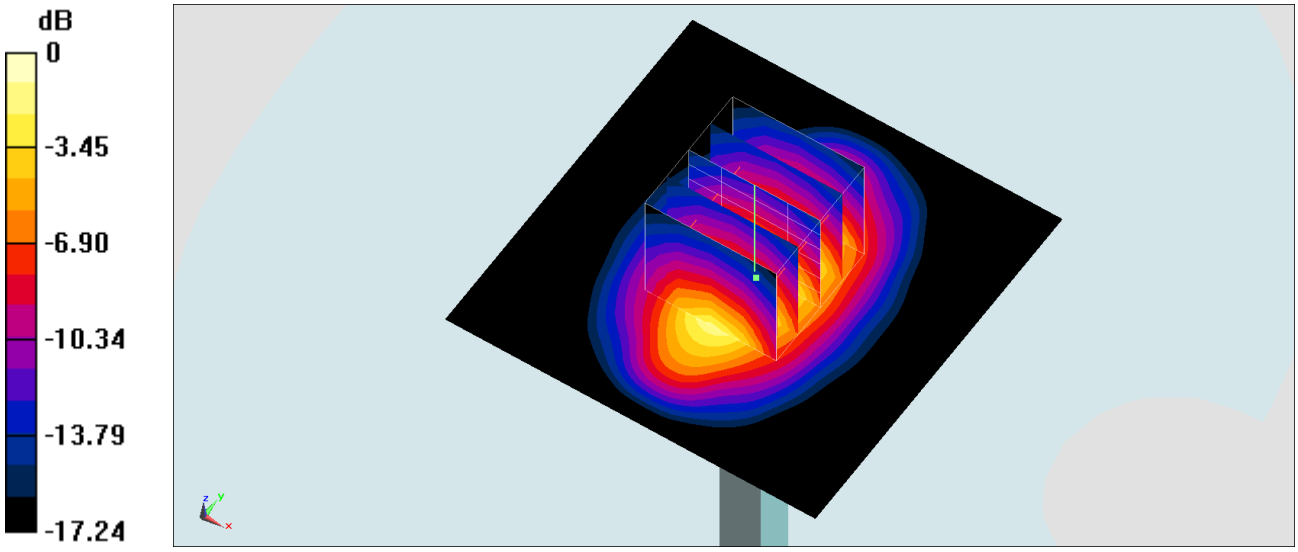


0 dB = 13.6 W/kg = 11.34 dBW/kg

Test Laboratory: Sporton International Inc. SAR/HAC Testing Lab Date: 2018/9/11

## System Check_Head_1900MHz

**DUT: D1900V2-5d018**

Communication System: CW; Frequency: 1900 MHz;Duty Cycle: 1:1
Medium: HSL_1900_180911 Medium parameters used: f = 1900 MHz; $\sigma$ = 1.376 S/m; $\varepsilon_r$ = 40.069; $\rho$ = 1000 kg/m$^3$
Ambient Temperature：23.3 ℃; Liquid Temperature：22.3 ℃

DASY5 Configuration:
- Probe: ES3DV3 - SN3169; ConvF(5.27, 5.27, 5.27) ; Calibrated: 2018/5/28
- Sensor-Surface: 3mm (Mechanical Surface Detection)
- Electronics: DAE3 Sn495; Calibrated: 2018/5/24
- Phantom: SAM_Left; Type: QD000P40CD; Serial: TP:1431
- Measurement SW: DASY52, Version 52.10 (1);SEMCAD X Version 14.6.11 (7439)

**Pin=250mW/Area Scan (61x61x1):** Interpolated grid: dx=1.500 mm, dy=1.500 mm
Maximum value of SAR (interpolated) = 12.7 W/kg

**Pin=250mW/Zoom Scan (5x5x7)/Cube 0:** Measurement grid: dx=8mm, dy=8mm, dz=5mm
Reference Value = 92.05 V/m; Power Drift = -0.05 dB
Peak SAR (extrapolated) = 17.4 W/kg
**SAR(1 g) = 9.57 W/kg; SAR(10 g) = 5.02 W/kg**
Maximum value of SAR (measured) = 12.0 W/kg

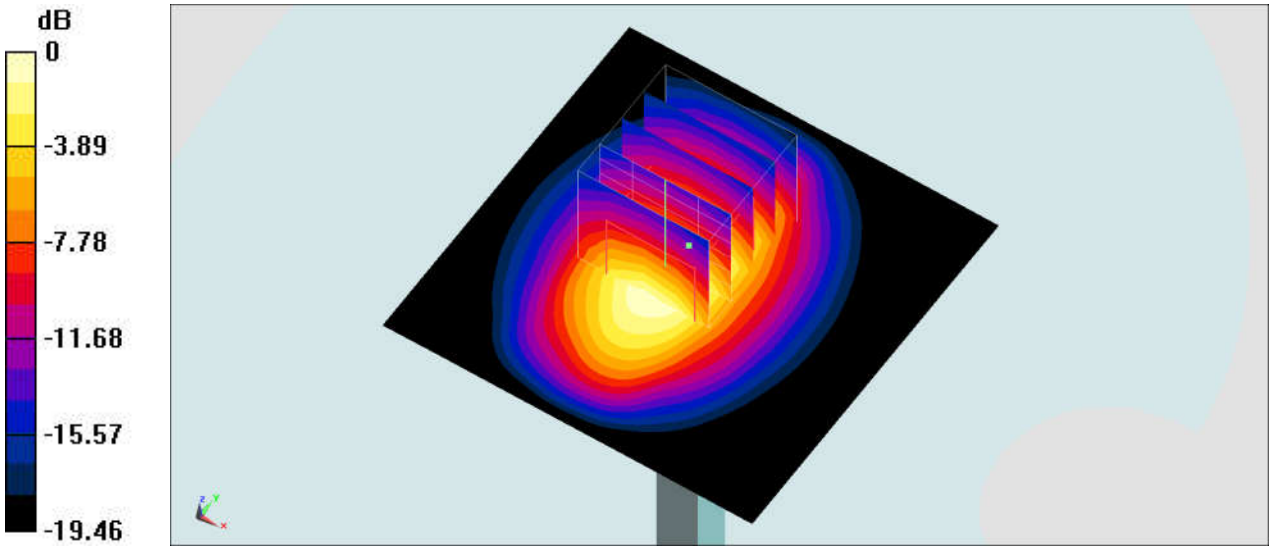


0 dB = 12.0 W/kg = 10.79 dBW/kg

Test Laboratory: Sporton International Inc. SAR/HAC Testing Lab Date: 2018/9/12

## System Check_Body_1900MHz

**DUT: D1900V2-5d018**

Communication System: CW; Frequency: 1900 MHz;Duty Cycle: 1:1
Medium: MSL_1900_180912 Medium parameters used: f = 1900 MHz; $\sigma$ = 1.563 S/m; $\varepsilon_r$ = 54.562; $\rho$ = 1000 kg/m$^3$
Ambient Temperature：23.3 ℃; Liquid Temperature：22.3 ℃

DASY5 Configuration:
- Probe: ES3DV3 - SN3169; ConvF(4.8, 4.8, 4.8) ; Calibrated: 2018/5/28
- Sensor-Surface: 3mm (Mechanical Surface Detection)
- Electronics: DAE3 Sn495; Calibrated: 2018/5/24
- Phantom: SAM_Left; Type: QD000P40CD; Serial: TP:1431
- Measurement SW: DASY52, Version 52.10 (1);SEMCAD X Version 14.6.11 (7439)

**Pin=250mW/Area Scan (61x61x1):** Interpolated grid: dx=1.500 mm, dy=1.500 mm
Maximum value of SAR (interpolated) = 13.0 W/kg

**Pin=250mW/Zoom Scan (5x5x7)/Cube 0:** Measurement grid: dx=8mm, dy=8mm, dz=5mm
Reference Value = 94.15 V/m; Power Drift = -0.17 dB
Peak SAR (extrapolated) = 18.0 W/kg
**SAR(1 g) = 10.2 W/kg; SAR(10 g) = 5.32 W/kg**
Maximum value of SAR (measured) = 12.5 W/kg

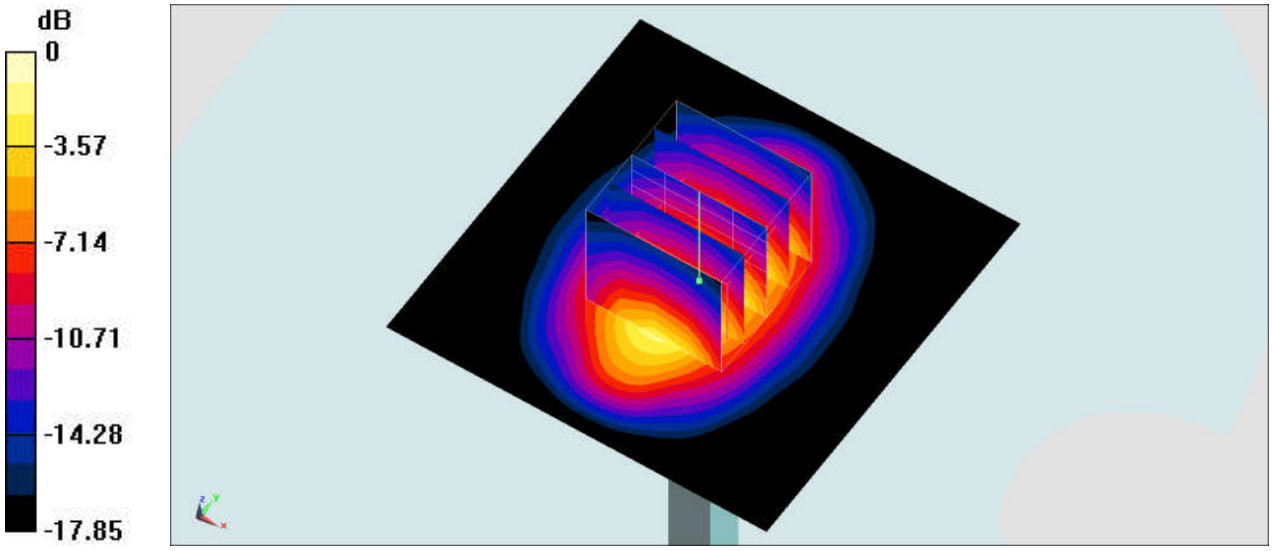


0 dB = 12.5 W/kg = 10.97 dBW/kg

Test Laboratory: Sporton International Inc. SAR/HAC Testing Lab Date: 2018/9/13

## System Check_Body_1900MHz

**DUT: D1900V2-5d018**

Communication System: CW; Frequency: 1900 MHz;Duty Cycle: 1:1
Medium: MSL_1900_180913 Medium parameters used: f = 1900 MHz; $\sigma$ = 1.575 S/m; $\varepsilon_r$ = 54.452; $\rho$ = 1000 kg/m$^3$
Ambient Temperature：23.9 ℃; Liquid Temperature：22.9 ℃

DASY5 Configuration:
- Probe: ES3DV3 - SN3169; ConvF(4.8, 4.8, 4.8) ; Calibrated: 2018/5/28
- Sensor-Surface: 3mm (Mechanical Surface Detection)
- Electronics: DAE3 Sn495; Calibrated: 2018/5/24
- Phantom: SAM_Left; Type: QD000P40CD; Serial: TP:1431
- Measurement SW: DASY52, Version 52.10 (1);SEMCAD X Version 14.6.11 (7439)

**Pin=250mW/Area Scan (61x61x1):** Interpolated grid: dx=1.500 mm, dy=1.500 mm
Maximum value of SAR (interpolated) = 13.1 W/kg

**Pin=250mW/Zoom Scan (5x5x7)/Cube 0:** Measurement grid: dx=8mm, dy=8mm, dz=5mm
Reference Value = 94.15 V/m; Power Drift = -0.17 dB
Peak SAR (extrapolated) = 18.1 W/kg
**SAR(1 g) = 10.3 W/kg; SAR(10 g) = 5.36 W/kg**
Maximum value of SAR (measured) = 12.6 W/kg

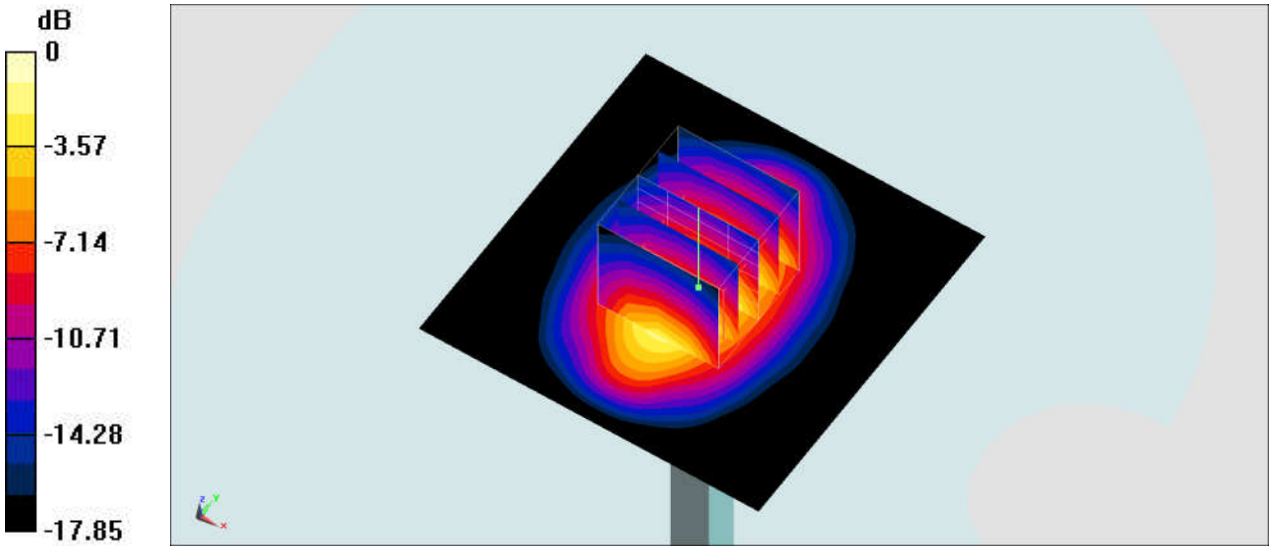


0 dB = 12.6 W/kg = 11.00 dBW/kg

## System Check_Body_1900MHz

### DUT: D1900V2-5d018

Communication System: CW; Frequency: 1900 MHz;Duty Cycle: 1:1
Medium: MSL_1900_180918 Medium parameters used: f = 1900 MHz; $\sigma$ = 1.533 S/m; $\varepsilon_r$ = 53.419; $\rho$ = 1000 kg/m$^3$
Ambient Temperature：23.2 ℃; Liquid Temperature：22.2 ℃

DASY5 Configuration
- Probe: EX3DV4 - SN3976;ConvF(8.09, 8.09, 8.09) ;Calibrated: 2018/1/23
- Sensor-Surface: 1.4mm (Mechanical Surface Detection)
- Electronics: DAE4 Sn1424; Calibrated: 2018/1/18
- Phantom: SAM_Right; Type: QD000P40CD; Serial: S/N:1796
- Measurement SW: DASY52, Version 52.10 (1); SEMCAD X Version 14.6.11 (7439)

**Pin=250mW/Area Scan (61x61x1):** Interpolated grid: dx=1.500 mm, dy=1.500 mm
Maximum value of SAR (interpolated) = 16.4 W/kg

**Pin=250mW/Zoom Scan (5x5x7)/Cube 0:** Measurement grid: dx=8mm, dy=8mm, dz=5mm
Reference Value = 104.3 V/m; Power Drift = 0.04 dB
Peak SAR (extrapolated) = 18.7 W/kg
**SAR(1 g) = 10.4 W/kg; SAR(10 g) = 5.45 W/kg**
Maximum value of SAR (measured) = 15.6 W/kg

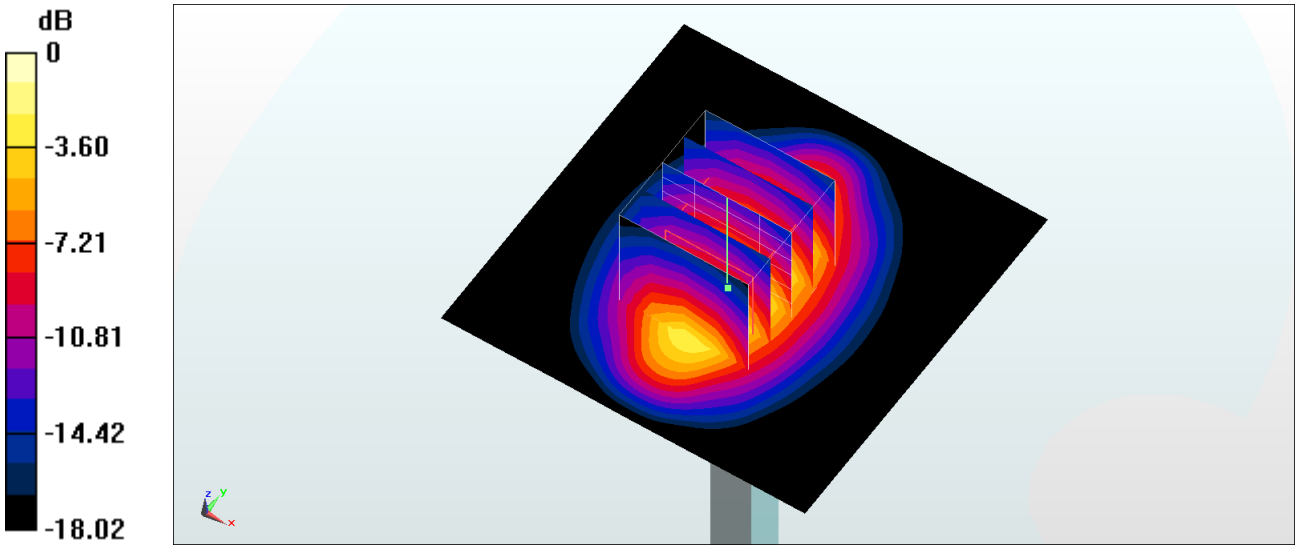


0 dB = 15.6 W/kg = 11.93 dBW/kg

# System Check_Body_1900MHz

## DUT: D1900V2-5d018

Communication System: CW; Frequency: 1900 MHz;Duty Cycle: 1:1
Medium: MSL_1900_180918 Medium parameters used: f = 1900 MHz; $\sigma$ = 1.533 S/m; $\varepsilon_r$ = 53.419; $\rho$ = 1000 kg/m$^3$
Ambient Temperature：23.2 ℃; Liquid Temperature：22.2 ℃

DASY5 Configuration
- Probe: EX3DV4 - SN7346;ConvF(8.04, 8.04, 8.04) ;Calibrated: 2018/2/28
- Sensor-Surface: 1.4mm (Mechanical Surface Detection)
- Electronics: DAE4 Sn1399; Calibrated: 2017/11/16
- Phantom: SAM_Right; Type: QD000P40CD; Serial: S/N:1796
- Measurement SW: DASY52, Version 52.10 (1); SEMCAD X Version 14.6.11 (7439)

**Pin=250mW/Area Scan (61x61x1):** Interpolated grid: dx=1.500 mm, dy=1.500 mm
Maximum value of SAR (interpolated) = 14.9 W/kg

**Pin=250mW/Zoom Scan (5x5x7)/Cube 0:** Measurement grid: dx=8mm, dy=8mm, dz=5mm
Reference Value = 102.0 V/m; Power Drift = -0.06 dB
Peak SAR (extrapolated) = 17.6 W/kg
**SAR(1 g) = 10 W/kg; SAR(10 g) = 5.27 W/kg**
Maximum value of SAR (measured) = 14.8 W/kg

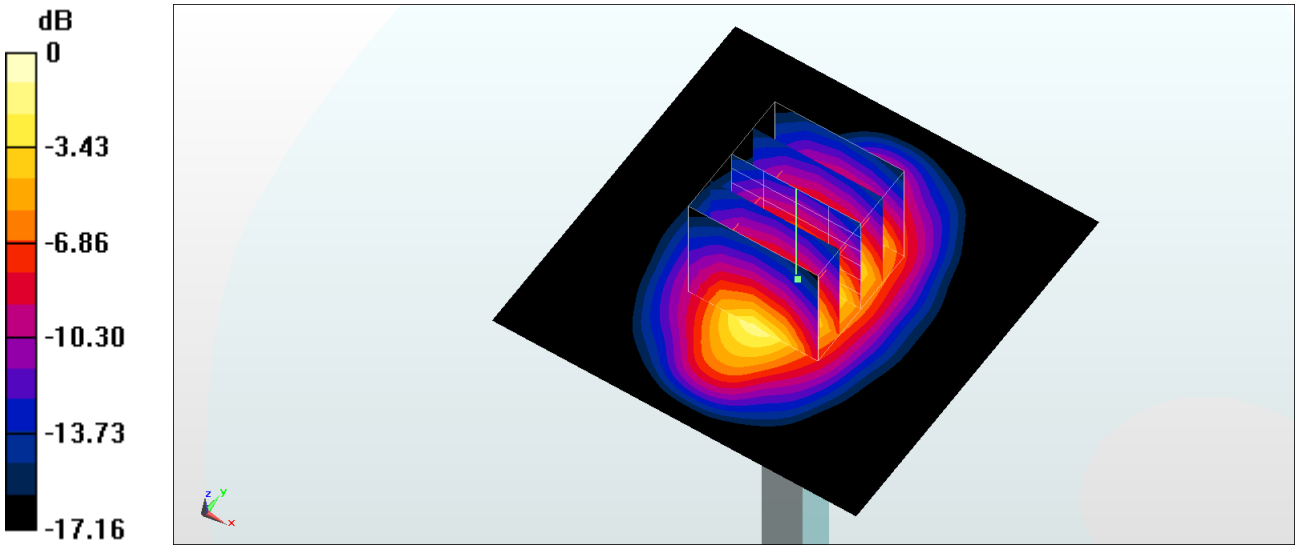


0 dB = 14.8 W/kg = 11.70 dBW/kg

## System Check_Body_1900MHz

### DUT: D1900V2-5d018

Communication System: CW; Frequency: 1900 MHz;Duty Cycle: 1:1
Medium: MSL_1900_180928 Medium parameters used: f = 1900 MHz; $\sigma$ = 1.546 S/m; $\varepsilon_r$ = 52.396; $\rho$ = 1000 kg/m$^3$
Ambient Temperature：23.4 ℃; Liquid Temperature：22.4 ℃

DASY5 Configuration:
- Probe: EX3DV4 - SN7306;ConvF(7.87, 7.87, 7.87) ;Calibrated: 2018/7/26
- Sensor-Surface: 1.4mm (Mechanical Surface Detection)
- Electronics: DAE4 Sn917; Calibrated: 2017/12/14
- Phantom: SAM_Right; Type: QD000P40CD; Serial: 1884
- Measurement SW: DASY52, Version 52.10 (1);SEMCAD X Version 14.6.11 (7439)

**Pin=250mW/Area Scan (61x61x1):** Interpolated grid: dx=1.500 mm, dy=1.500 mm
Maximum value of SAR (interpolated) = 16.5 W/kg

**Pin=250mW/Zoom Scan (5x5x7)/Cube 0:** Measurement grid: dx=8mm, dy=8mm, dz=5mm
Reference Value = 106.9 V/m; Power Drift = -0.01 dB
Peak SAR (extrapolated) = 19.5 W/kg
**SAR(1 g) = 10.7 W/kg; SAR(10 g) = 5.53 W/kg**
Maximum value of SAR (measured) = 16.2 W/kg

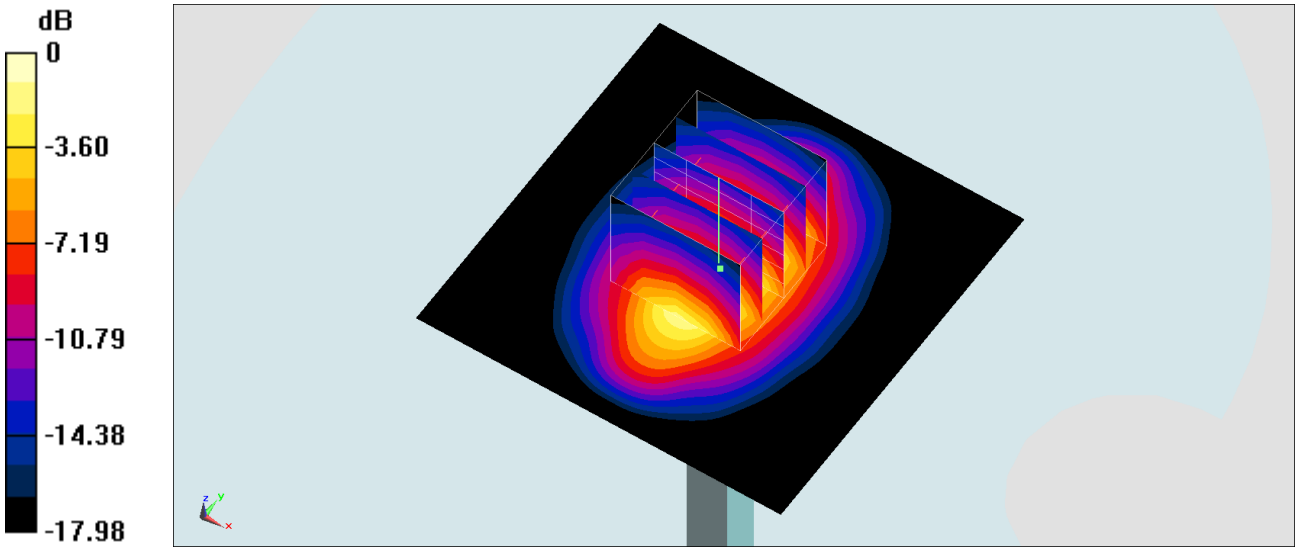


0 dB = 16.2 W/kg = 12.10 dBW/kg

## System Check_Body_1900MHz

### DUT: D1900V2-5d018

Communication System: CW; Frequency: 1900 MHz;Duty Cycle: 1:1
Medium: MSL_1900_180929 Medium parameters used: f = 1900 MHz; $\sigma$ = 1.556 S/m; $\varepsilon_r$ = 55.543; $\rho$ = 1000 kg/m$^3$
Ambient Temperature：23.5 ℃; Liquid Temperature：22.5 ℃

DASY5 Configuration:
- Probe: EX3DV4 - SN7306;ConvF(7.87, 7.87, 7.87) ;Calibrated: 2018/7/26
- Sensor-Surface: 1.4mm (Mechanical Surface Detection)
- Electronics: DAE4 Sn1399; Calibrated: 2017/11/16
- Phantom: SAM_Right; Type: QD000P40CD; Serial: 1884
- Measurement SW: DASY52, Version 52.10 (1);SEMCAD X Version 14.6.11 (7439)

**Pin=250mW/Area Scan (61x61x1):** Interpolated grid: dx=1.500 mm, dy=1.500 mm
Maximum value of SAR (interpolated) = 14.9 W/kg

**Pin=250mW/Zoom Scan (5x5x7)/Cube 0:** Measurement grid: dx=8mm, dy=8mm, dz=5mm
Reference Value = 102.1 V/m; Power Drift = -0.03 dB
Peak SAR (extrapolated) = 18.0 W/kg
**SAR(1 g) = 9.77 W/kg; SAR(10 g) = 5.06 W/kg**
Maximum value of SAR (measured) = 15.1 W/kg

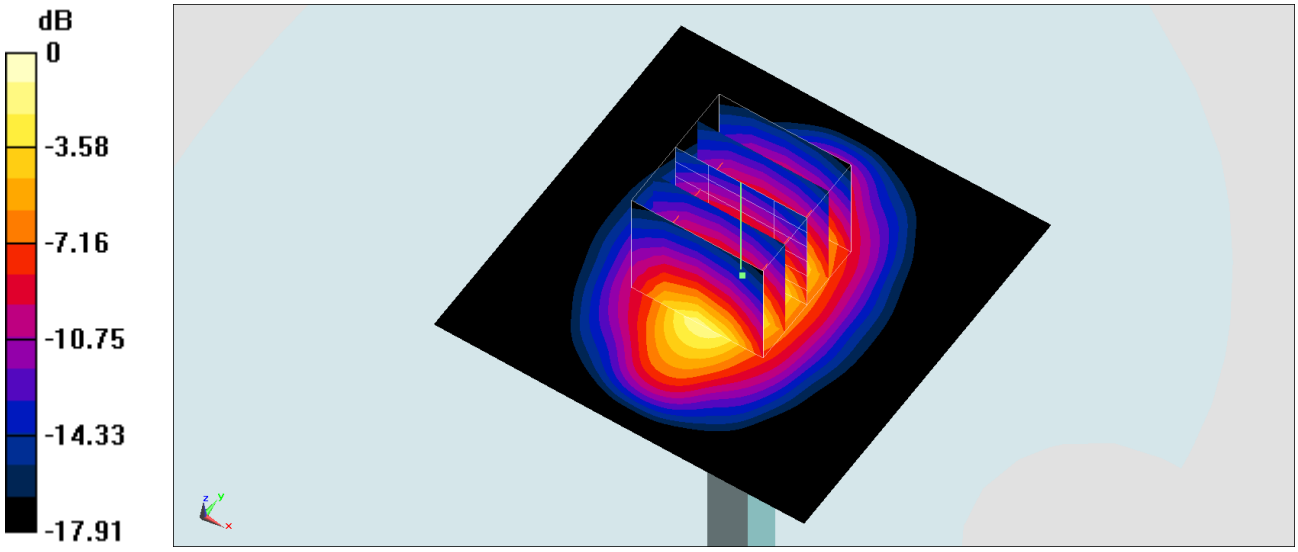


0 dB = 15.1 W/kg = 11.79 dBW/kg

## System Check_Head_2450MHz

### DUT: D2450V2-929

Communication System: CW; Frequency: 2450 MHz;Duty Cycle: 1:1
Medium: HSL_2450_180914 Medium parameters used: f = 2450 MHz; $\sigma$ = 1.835 S/m; $\varepsilon_r$ = 40.041; $\rho$ = 1000 kg/m$^3$
Ambient Temperature：23.6 ℃; Liquid Temperature：22.6 ℃

DASY5 Configuration:
- Probe: EX3DV4 - SN7306; ConvF(7.43, 7.43, 7.43); Calibrated: 2018/7/26;
- Sensor-Surface: 1.4mm (Mechanical Surface Detection)
- Electronics: DAE4 Sn917; Calibrated: 2017/12/14
- Phantom: SAM_Front; Type: QD000P40CD; Serial: 1719
- Measurement SW: DASY52, Version 52.10 (0);SEMCAD X Version 14.6.10 (7417)

**Pin=250mW/Area Scan (61x61x1):** Interpolated grid: dx=1.500 mm, dy=1.500 mm
Maximum value of SAR (interpolated) = 21.5 W/kg

**Pin=250mW/Zoom Scan (5x5x7)/Cube 0:** Measurement grid: dx=8mm, dy=8mm, dz=5mm
Reference Value = 87.40 V/m; Power Drift = -0.02 dB
Peak SAR (extrapolated) = 27.6 W/kg
**SAR(1 g) = 13.7 W/kg; SAR(10 g) = 6.37 W/kg**
Maximum value of SAR (measured) = 22.8 W/kg

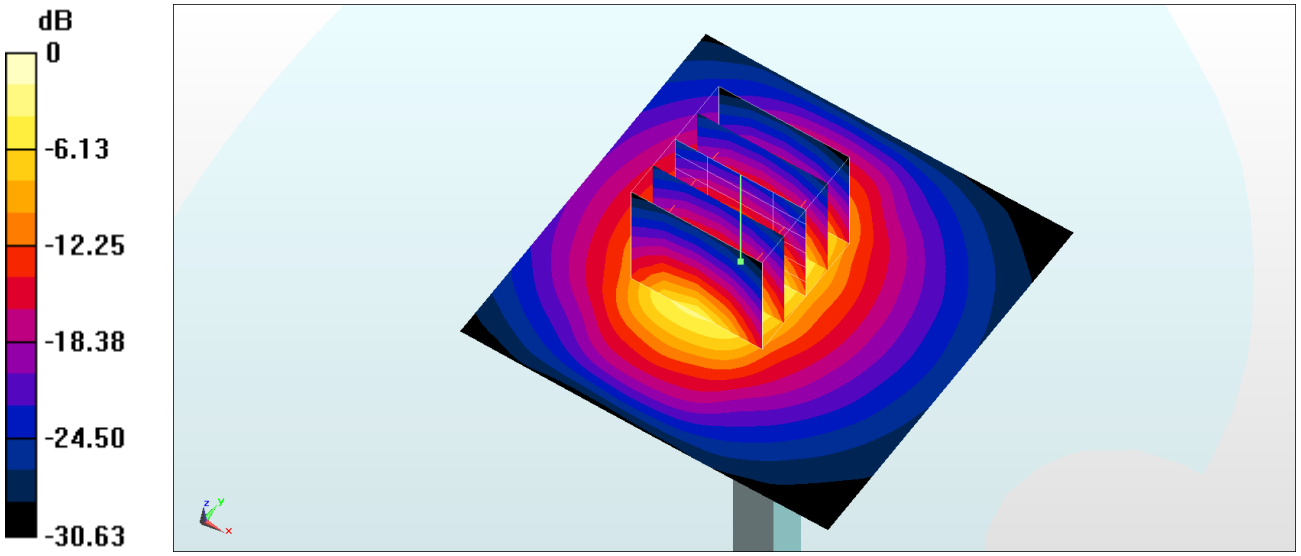


0 dB = 21.5 W/kg = 13.32 dBW/kg

# System Check_Head_2450MHz

## DUT: D2450V2-929

Communication System: CW; Frequency: 2450 MHz;Duty Cycle: 1:1
Medium: HSL_2450_180919 Medium parameters used : f = 2450 MHz; $\sigma$ = 1.794 S/m; $\varepsilon_r$ = 37.824; $\rho$ = 1000 kg/m$^3$
Ambient Temperature：23.6 ℃; Liquid Temperature：22.6 ℃

DASY5 Configuration
- Probe: EX3DV4 - SN7346;ConvF(7.49, 7.49, 7.49) ;Calibrated: 2018/2/28
- Sensor-Surface: 1.4mm (Mechanical Surface Detection)
- Electronics: DAE4 Sn1399; Calibrated: 2017/11/16
- Phantom: SAM_Right; Type: QD000P40CD; Serial: S/N:1796
- Measurement SW: DASY52, Version 52.10 (1); SEMCAD X Version 14.6.11 (7439)

**Pin=250mW/Area Scan (71x71x1):** Interpolated grid: dx=1.200 mm, dy=1.200 mm
Maximum value of SAR (interpolated) = 22.3 W/kg

**Pin=250mW/Zoom Scan (7x7x7)/Cube 0:** Measurement grid: dx=5mm, dy=5mm, dz=5mm
Reference Value = 112.0 V/m; Power Drift = -0.17 dB
Peak SAR (extrapolated) = 26.8 W/kg
**SAR(1 g) = 13.2 W/kg; SAR(10 g) = 6.21 W/kg**
Maximum value of SAR (measured) = 21.9 W/kg

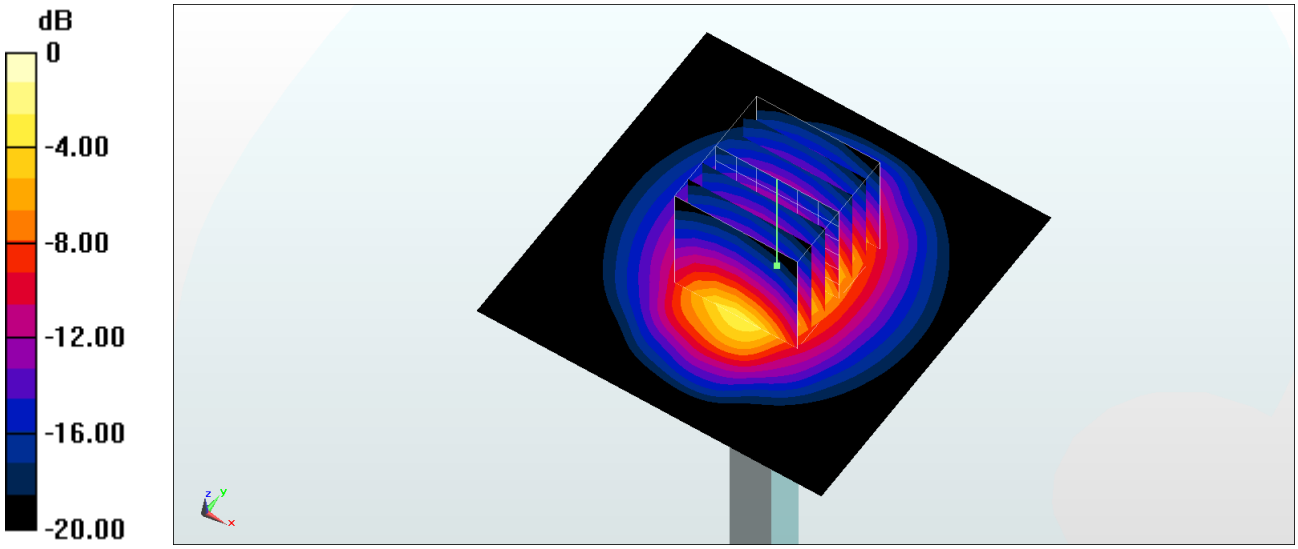


0 dB = 21.9 W/kg = 13.40 dBW/kg

# System Check_Body_2450MHz

**DUT: D2450V2-929**

Communication System: CW; Frequency: 2450 MHz;Duty Cycle: 1:1
Medium: MSL_2450_180918 Medium parameters used: f = 2450 MHz; $\sigma$ = 1.961 S/m; $\varepsilon_r$ = 53.349; $\rho$ = 1000 kg/m$^3$
Ambient Temperature：23.2 ℃; Liquid Temperature：22.2 ℃

DASY5 Configuration
- Probe: EX3DV4 - SN7346;ConvF(7.78, 7.78, 7.78) ;Calibrated: 2018/2/28
- Sensor-Surface: 1.4mm (Mechanical Surface Detection)
- Electronics: DAE4 Sn1399; Calibrated: 2017/11/16
- Phantom: SAM_Left; Type: QD000P40CD; Serial: S/N:1801
- Measurement SW: DASY52, Version 52.10 (1); SEMCAD X Version 14.6.11 (7439)

**Pin=250mW/Area Scan (71x71x1):** Interpolated grid: dx=1.200 mm, dy=1.200 mm
Maximum value of SAR (interpolated) = 19.8 W/kg

**Pin=250mW/Zoom Scan (7x7x7)/Cube 0:** Measurement grid: dx=5mm, dy=5mm, dz=5mm
Reference Value = 103.5 V/m; Power Drift = -0.11 dB
Peak SAR (extrapolated) = 24.6 W/kg
**SAR(1 g) = 12 W/kg; SAR(10 g) = 5.61 W/kg**
Maximum value of SAR (measured) = 19.9 W/kg

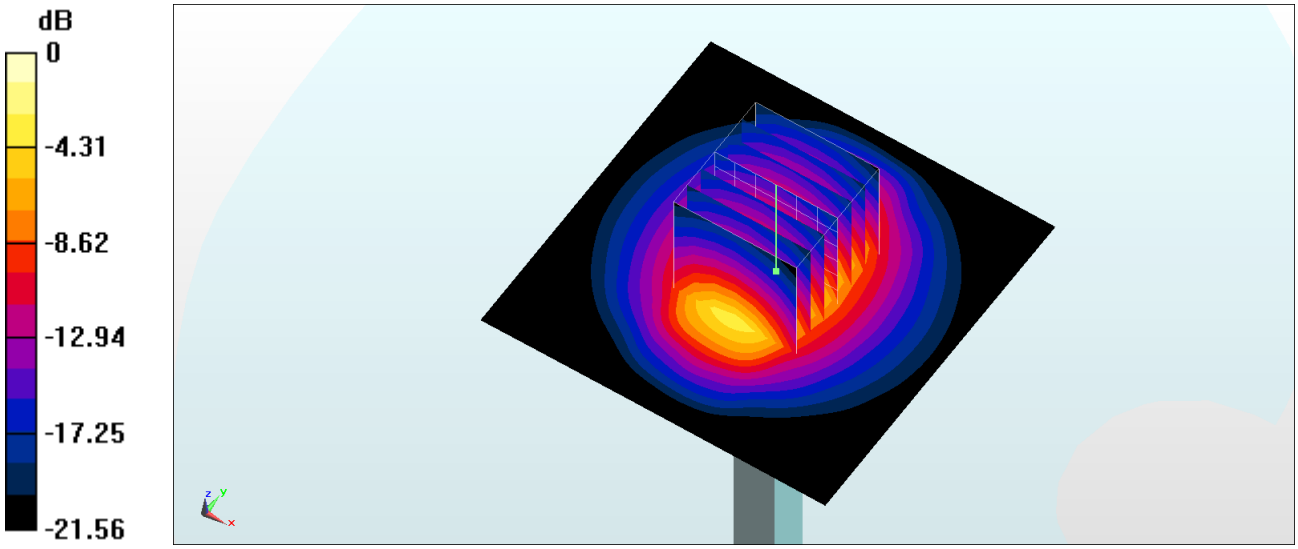


0 dB = 19.9 W/kg = 12.99 dBW/kg

Test Laboratory: Sporton International Inc. SAR/HAC Testing Lab Date: 2018/9/10

## System Check_Head_2600MHz

**DUT: D2600V2-1078**

Communication System: CW; Frequency: 2600 MHz;Duty Cycle: 1:1
Medium: HSL_2600_180910 Medium parameters used: f = 2600 MHz; $\sigma$ = 1.95 S/m; $\varepsilon_r$ = 39.111; $\rho$ = 1000 kg/m$^3$
Ambient Temperature：23.6 ℃; Liquid Temperature：22.6 ℃

DASY5 Configuration:
- Probe: ES3DV3 - SN3169; ConvF(4.5, 4.5, 4.5) ; Calibrated: 2018/5/28
- Sensor-Surface: 3mm (Mechanical Surface Detection)
- Electronics: DAE3 Sn495; Calibrated: 2018/5/24
- Phantom: SAM_Left; Type: QD000P40CD; Serial: TP:1431
- Measurement SW: DASY52, Version 52.10 (1);SEMCAD X Version 14.6.11 (7439)

**Pin=250mW/Area Scan (81x81x1):** Interpolated grid: dx=1.200 mm, dy=1.200 mm
Maximum value of SAR (interpolated) = 17.7 W/kg

**Pin=250mW/Zoom Scan (7x7x7)/Cube 0:** Measurement grid: dx=5mm, dy=5mm, dz=5mm
Reference Value = 97.77 V/m; Power Drift = 0.03 dB
Peak SAR (extrapolated) = 28.6 W/kg
**SAR(1 g) = 13.2 W/kg; SAR(10 g) = 5.96 W/kg**
Maximum value of SAR (measured) = 17.7 W/kg

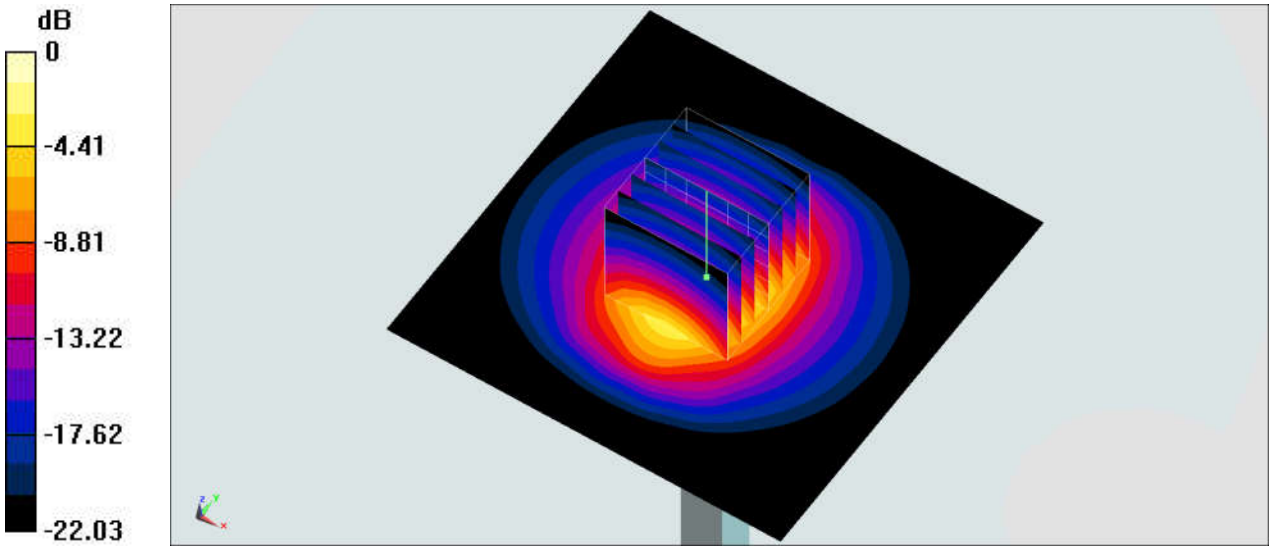


0 dB = 17.7 W/kg = 12.48 dBW/kg

Test Laboratory: Sporton International Inc. SAR/HAC Testing Lab Date: 2018/9/12

## System Check_Body_2600MHz

**DUT: D2600V2-1078**

Communication System: CW; Frequency: 2600 MHz;Duty Cycle: 1:1
Medium: MSL_2600_180912 Medium parameters used: f = 2600 MHz; $\sigma$ = 2.204 S/m; $\varepsilon_r$ = 52.654; $\rho$ = 1000 kg/m$^3$
Ambient Temperature：23.3 ℃; Liquid Temperature：22.3 ℃

DASY5 Configuration:
- Probe: ES3DV3 - SN3169; ConvF(4.27, 4.27, 4.27) ; Calibrated: 2018/5/28
- Sensor-Surface: 3mm (Mechanical Surface Detection)
- Electronics: DAE3 Sn495; Calibrated: 2018/5/24
- Phantom: SAM-Right; Type: SAM; Serial: TP-1503
- Measurement SW: DASY52, Version 52.10 (1);SEMCAD X Version 14.6.11 (7439)

**Pin=250mW/Area Scan (61x61x1):** Interpolated grid: dx=1.200 mm, dy=1.200 mm
Maximum value of SAR (interpolated) = 21.1 W/kg

**Pin=250mW/Zoom Scan (7x7x7)/Cube 0:** Measurement grid: dx=5mm, dy=5mm, dz=5mm
Reference Value = 89.76 V/m; Power Drift = -0.07 dB
Peak SAR (extrapolated) = 32.0 W/kg
**SAR(1 g) = 14.2 W/kg; SAR(10 g) = 6.33 W/kg**
Maximum value of SAR (measured) = 18.4 W/kg

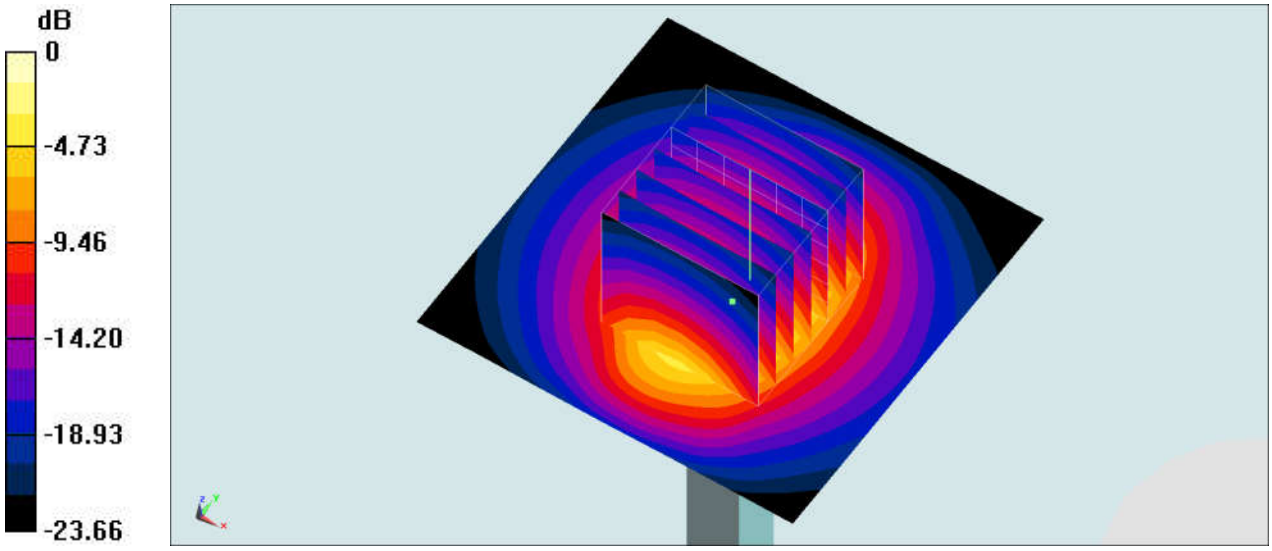


0 dB = 18.4 W/kg = 12.65 dBW/kg

## System Check_Body_2600MHz

### DUT: D2600V2-1078

Communication System: CW; Frequency: 2600 MHz;Duty Cycle: 1:1
Medium: MSL_2600_180930 Medium parameters used: f = 2600 MHz; $\sigma$ = 2.144 S/m; $\varepsilon_r$ = 52.247; $\rho$ = 1000 kg/m$^3$
Ambient Temperature：23.6 ℃; Liquid Temperature：22.6 ℃

DASY5 Configuration:
- Probe: EX3DV4 - SN7346;ConvF(7.44, 7.44, 7.44) ;Calibrated: 2018/2/28
- Sensor-Surface: 1.4mm (Mechanical Surface Detection)
- Electronics: DAE4 Sn910; Calibrated: 2018/6/21
- Phantom: SAM-Left; Type: QD 000 P40 C; Serial: TP-1446
- Measurement SW: DASY52, Version 52.10 (1);SEMCAD X Version 14.6.11 (7439)

**Pin=250mW/Area Scan (61x61x1):** Interpolated grid: dx=1.200 mm, dy=1.200 mm
Maximum value of SAR (interpolated) = 22.5 W/kg

**Pin=250mW/Zoom Scan (7x7x7)/Cube 0:** Measurement grid: dx=5mm, dy=5mm, dz=5mm
Reference Value = 102.4 V/m; Power Drift = 0.02 dB
Peak SAR (extrapolated) = 29.0 W/kg
**SAR(1 g) = 13 W/kg; SAR(10 g) = 5.7 W/kg**
Maximum value of SAR (measured) = 22.9 W/kg

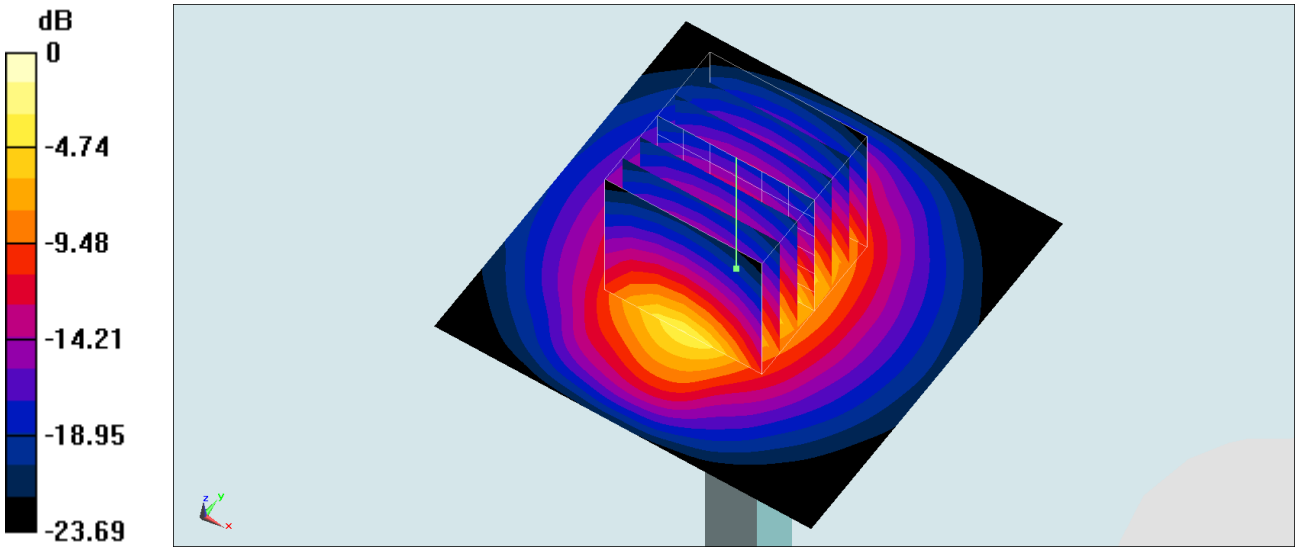


0 dB = 22.9 W/kg = 13.60 dBW/kg

## System Check_Head_5250MHz

### DUT: D5GHzV2-1006

Communication System: CW; Frequency: 5250 MHz;Duty Cycle: 1:1
Medium: HSL_5G_181002 Medium parameters used : f = 5250 MHz; $\sigma$ = 4.641 S/m; $\varepsilon_r$ = 37.021; $\rho$ = 1000 kg/m$^3$
Ambient Temperature：23.6 ℃; Liquid Temperature：22.6 ℃

DASY5 Configuration:
- Probe: EX3DV4 - SN7306;ConvF(5.38, 5.38, 5.38) ;Calibrated: 2018/7/26
- Sensor-Surface: 1.4mm (Mechanical Surface Detection)
- Electronics: DAE4 Sn1399; Calibrated: 2017/11/16
- Phantom: SAM-Left; Type: QD 000 P40 C; Serial: TP-1446
- Measurement SW: DASY52, Version 52.10 (1);SEMCAD X Version 14.6.11 (7439)

**Pin=100mW/Area Scan (71x71x1):** Interpolated grid: dx=1.000 mm, dy=1.000 mm
Maximum value of SAR (interpolated) = 21.2 W/kg

**Pin=100mW/Zoom Scan (7x7x7)/Cube 0:** Measurement grid: dx=4mm, dy=4mm, dz=1.4mm
Reference Value = 71.41 V/m; Power Drift = -0.05 dB
Peak SAR (extrapolated) = 32.0 W/kg
**SAR(1 g) = 8.28 W/kg; SAR(10 g) = 2.33 W/kg**
Maximum value of SAR (measured) = 19.5 W/kg

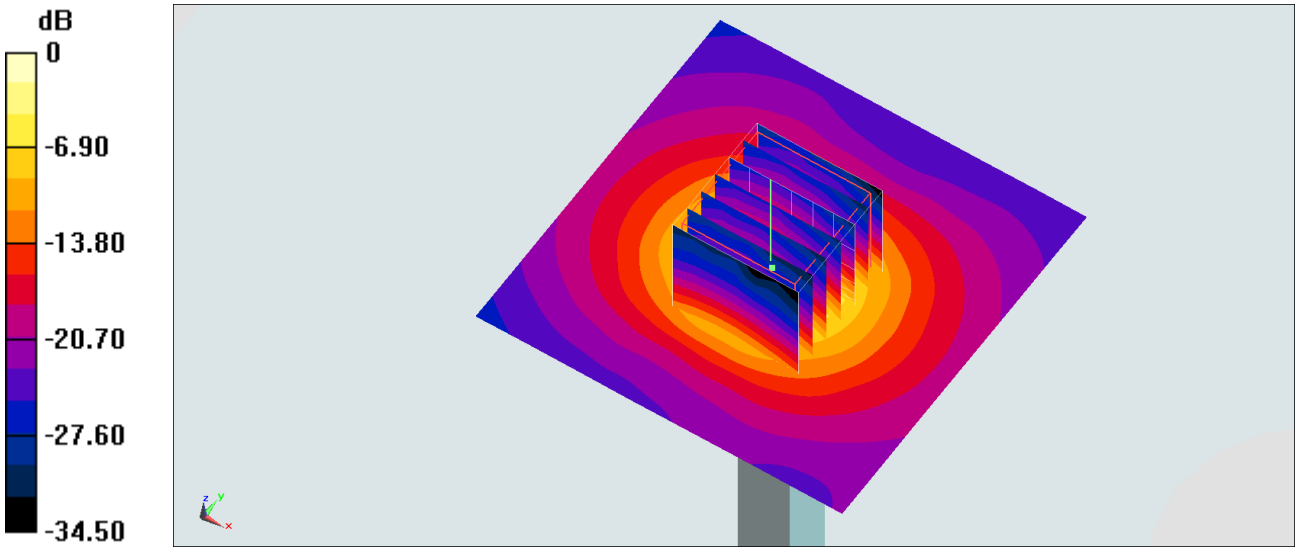


0 dB = 19.5 W/kg = 12.90 dBW/kg

## System Check_Body_5250MHz

### DUT: D5GHzV2-1006

Communication System: CW; Frequency: 5250 MHz;Duty Cycle: 1:1
Medium: MSL_5G_180920 Medium parameters used : f = 5250 MHz; $\sigma$ = 5.379 S/m; $\varepsilon_r$ = 48.088; $\rho$ = 1000 kg/m$^3$
Ambient Temperature：23.2 ℃; Liquid Temperature：22.2 ℃

DASY5 Configuration
- Probe: EX3DV4 - SN7346;ConvF(5.06, 5.06, 5.06) ;Calibrated: 2018/2/28
- Sensor-Surface: 1.4mm (Mechanical Surface Detection)
- Electronics: DAE4 Sn1399; Calibrated: 2017/11/16
- Phantom: SAM_Right; Type: QD000P40CD; Serial: S/N:1796
- Measurement SW: DASY52, Version 52.10 (1); SEMCAD X Version 14.6.11 (7439)

**Pin=100mW/Area Scan (71x71x1):** Interpolated grid: dx=1.000 mm, dy=1.000 mm
Maximum value of SAR (interpolated) = 17.1 W/kg

**Pin=100mW/Zoom Scan (7x7x7)/Cube 0:** Measurement grid: dx=4mm, dy=4mm, dz=1.4mm
Reference Value = 62.74 V/m; Power Drift = 0.07 dB
Peak SAR (extrapolated) = 26.3 W/kg
**SAR(1 g) = 7.29 W/kg; SAR(10 g) = 2.05 W/kg**
Maximum value of SAR (measured) = 16.8 W/kg

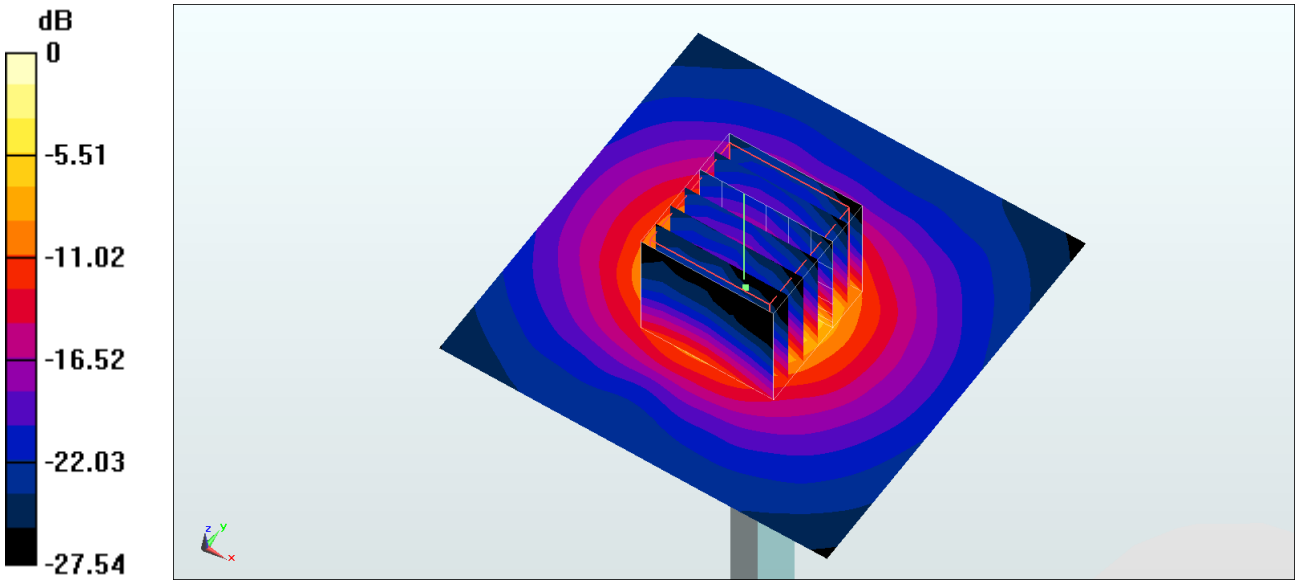


0 dB = 16.8 W/kg = 12.25 dBW/kg

## System Check_Body_5250MHz

### DUT: D5GHzV2-1203

Communication System: CW; Frequency: 5250 MHz;Duty Cycle: 1:1
Medium: MSL_5G_181001 Medium parameters used : f = 5250 MHz; $\sigma$ = 5.145 S/m; $\varepsilon_r$ = 50.452; $\rho$ = 1000 kg/m$^3$
Ambient Temperature：23.6 ℃; Liquid Temperature：22.6 ℃

DASY5 Configuration:
- Probe: EX3DV4 - SN7346;ConvF(5.06, 5.06, 5.06) ;Calibrated: 2018/2/28
- Sensor-Surface: 1.4mm (Mechanical Surface Detection)
- Electronics: DAE4 Sn910; Calibrated: 2018/6/21
- Phantom: SAM-Left; Type: QD 000 P40 C; Serial: TP-1446
- Measurement SW: DASY52, Version 52.10 (1);SEMCAD X Version 14.6.11 (7439)

**Pin=100mW/Area Scan (71x71x1):** Interpolated grid: dx=1.000 mm, dy=1.000 mm
Maximum value of SAR (interpolated) = 16.3 W/kg

**Pin=100mW/Zoom Scan (7x7x7)/Cube 0:** Measurement grid: dx=4mm, dy=4mm, dz=1.4mm
Reference Value = 64.56 V/m; Power Drift = 0.07 dB
Peak SAR (extrapolated) = 25.0 W/kg
**SAR(1 g) = 6.99 W/kg; SAR(10 g) = 1.99 W/kg**
Maximum value of SAR (measured) = 16.1 W/kg

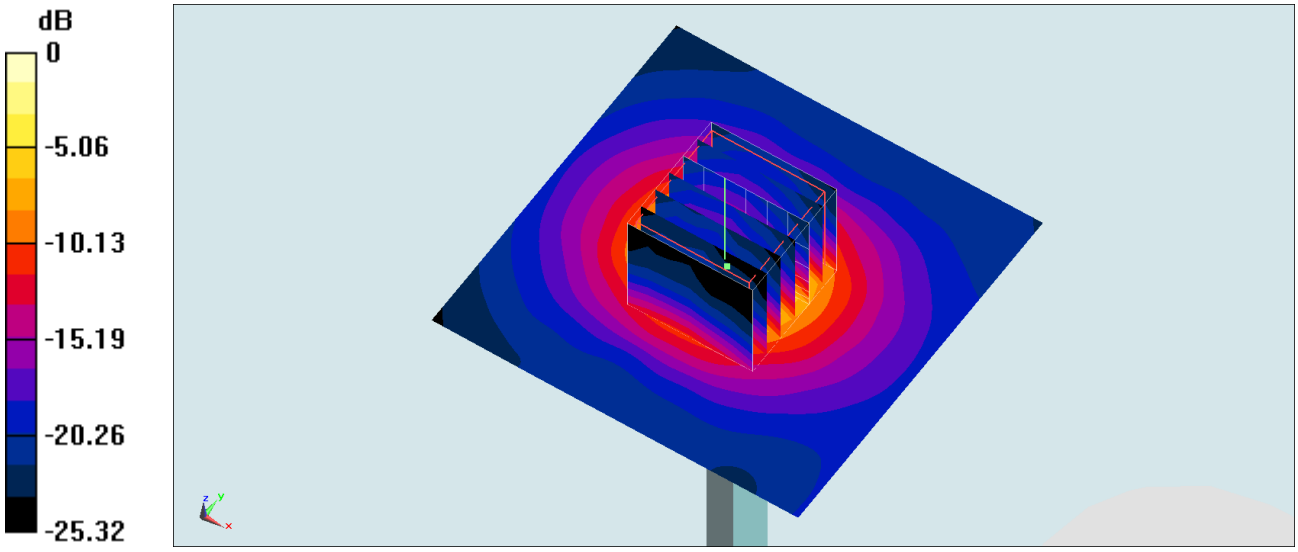


0 dB = 16.1 W/kg = 12.07 dBW/kg

# System Check_Head_5600MHz

## DUT: D5GHzV2-1006

Communication System: CW; Frequency: 5600 MHz;Duty Cycle: 1:1
Medium: HSL_5G_181002 Medium parameters used: f = 5600 MHz; $\sigma$ = 5.005 S/m; $\varepsilon_r$ = 36.464; $\rho$ = 1000 kg/m$^3$
Ambient Temperature：23.6 ℃; Liquid Temperature：22.6 ℃

DASY5 Configuration:
- Probe: EX3DV4 - SN7306;ConvF(4.71, 4.71, 4.71) ;Calibrated: 2018/7/26
- Sensor-Surface: 1.4mm (Mechanical Surface Detection)
- Electronics: DAE4 Sn1399; Calibrated: 2017/11/16
- Phantom: SAM-Left; Type: QD 000 P40 C; Serial: TP-1446
- Measurement SW: DASY52, Version 52.10 (1);SEMCAD X Version 14.6.11 (7439)

**Pin=100mW/Area Scan (71x71x1):** Interpolated grid: dx=1.000 mm, dy=1.000 mm
Maximum value of SAR (interpolated) = 22.5 W/kg

**Pin=100mW/Zoom Scan (7x7x7)/Cube 0:** Measurement grid: dx=4mm, dy=4mm, dz=1.4mm
Reference Value = 73.95 V/m; Power Drift = 0.15 dB
Peak SAR (extrapolated) = 37.7 W/kg
**SAR(1 g) = 9.03 W/kg; SAR(10 g) = 2.55 W/kg**
Maximum value of SAR (measured) = 22.3 W/kg

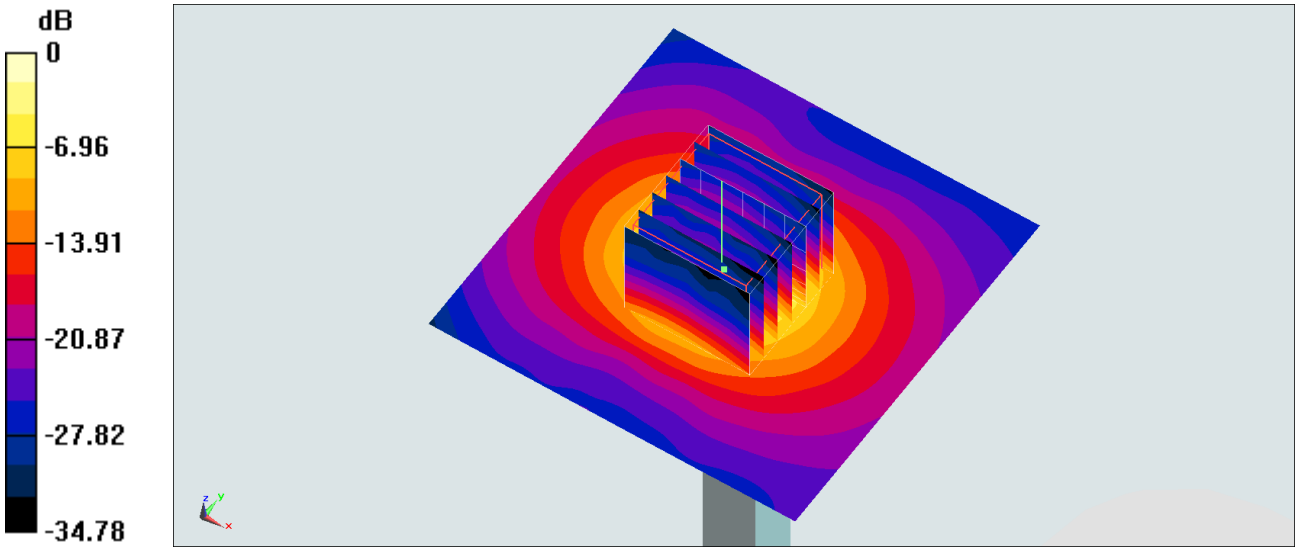


0 dB = 22.3 W/kg = 13.48 dBW/kg

## System Check_Body_5600MHz

### DUT: D5GHzV2-1006

Communication System: CW ; Frequency: 5600 MHz;Duty Cycle: 1:1
Medium: MSL_5G_180920 Medium parameters used: f = 5600 MHz; $\sigma$ = 5.836 S/m; $\varepsilon_r$ = 47.513; $\rho$ = 1000 kg/m$^3$
Ambient Temperature：23.2 ℃; Liquid Temperature：22.2 ℃

DASY5 Configuration
- Probe: EX3DV4 - SN7346;ConvF(4.35, 4.35, 4.35) ;Calibrated: 2018/2/28
- Sensor-Surface: 1.4mm (Mechanical Surface Detection)
- Electronics: DAE4 Sn1399; Calibrated: 2017/11/16
- Phantom: SAM_Right; Type: QD000P40CD; Serial: S/N:1796
- Measurement SW: DASY52, Version 52.10 (1); SEMCAD X Version 14.6.11 (7439)

**Pin=100mW/Area Scan (71x71x1):** Interpolated grid: dx=1.000 mm, dy=1.000 mm
Maximum value of SAR (interpolated) = 20.3 W/kg

**Pin=100mW/Zoom Scan (7x7x7)/Cube 0:** Measurement grid: dx=4mm, dy=4mm, dz=1.4mm
Reference Value = 67.59 V/m; Power Drift = 0.08 dB
Peak SAR (extrapolated) = 34.2 W/kg
**SAR(1 g) = 8.27 W/kg; SAR(10 g) = 2.29 W/kg**
Maximum value of SAR (measured) = 20.1 W/kg

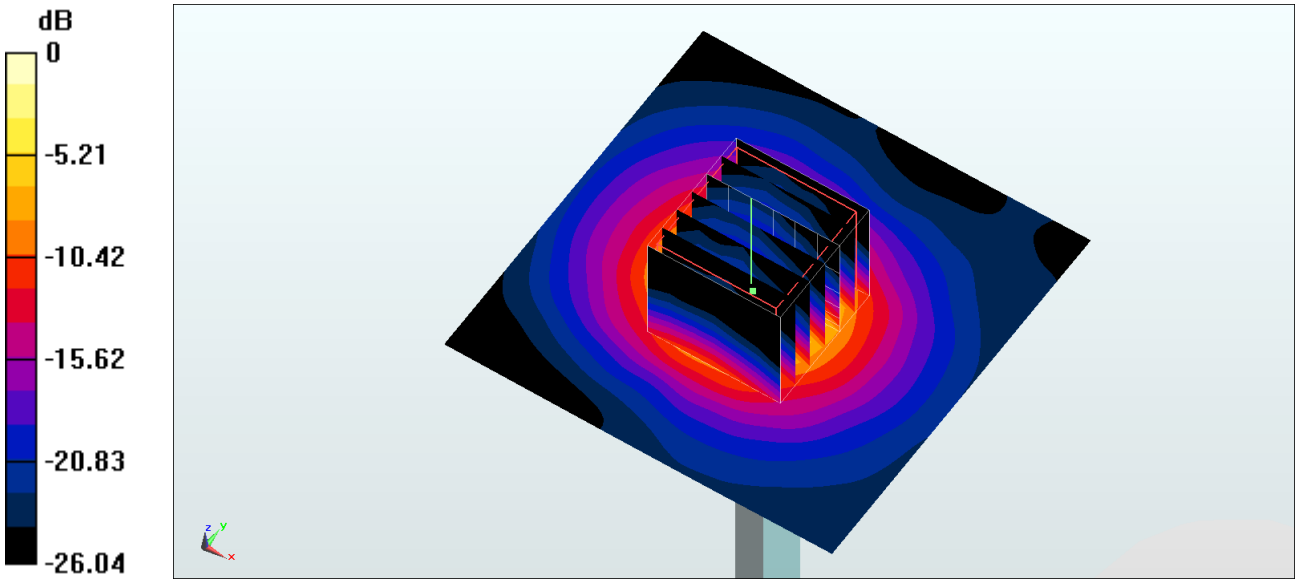


0 dB = 20.1 W/kg = 13.03 dBW/kg

## System Check_Body_5600MHz

### DUT: D5GHzV2-1203

Communication System: CW; Frequency: 5600 MHz;Duty Cycle: 1:1
Medium: MSL_5G_181001 Medium parameters used: f = 5600 MHz; $\sigma$ = 5.603 S/m; $\varepsilon_r$ = 49.878; $\rho$ = 1000 kg/m$^3$
Ambient Temperature：23.6 ℃; Liquid Temperature：22.6 ℃

DASY5 Configuration:
- Probe: EX3DV4 - SN7306;ConvF(4.03, 4.03, 4.03) ;Calibrated: 2018/7/26
- Sensor-Surface: 1.4mm (Mechanical Surface Detection)
- Electronics: DAE4 Sn1399; Calibrated: 2017/11/16
- Phantom: SAM-Left; Type: QD 000 P40 C; Serial: TP-1446
- Measurement SW: DASY52, Version 52.10 (1);SEMCAD X Version 14.6.11 (7439)

**Pin=100mW/Area Scan (71x71x1):** Interpolated grid: dx=1.000 mm, dy=1.000 mm
Maximum value of SAR (interpolated) = 19.4 W/kg

**Pin=100mW/Zoom Scan (7x7x7)/Cube 0:** Measurement grid: dx=4mm, dy=4mm, dz=1.4mm
Reference Value = 43.67 V/m; Power Drift = 0.14 dB
Peak SAR (extrapolated) = 34.7 W/kg
**SAR(1 g) = 7.86 W/kg; SAR(10 g) = 2.18 W/kg**
Maximum value of SAR (measured) = 20.8 W/kg

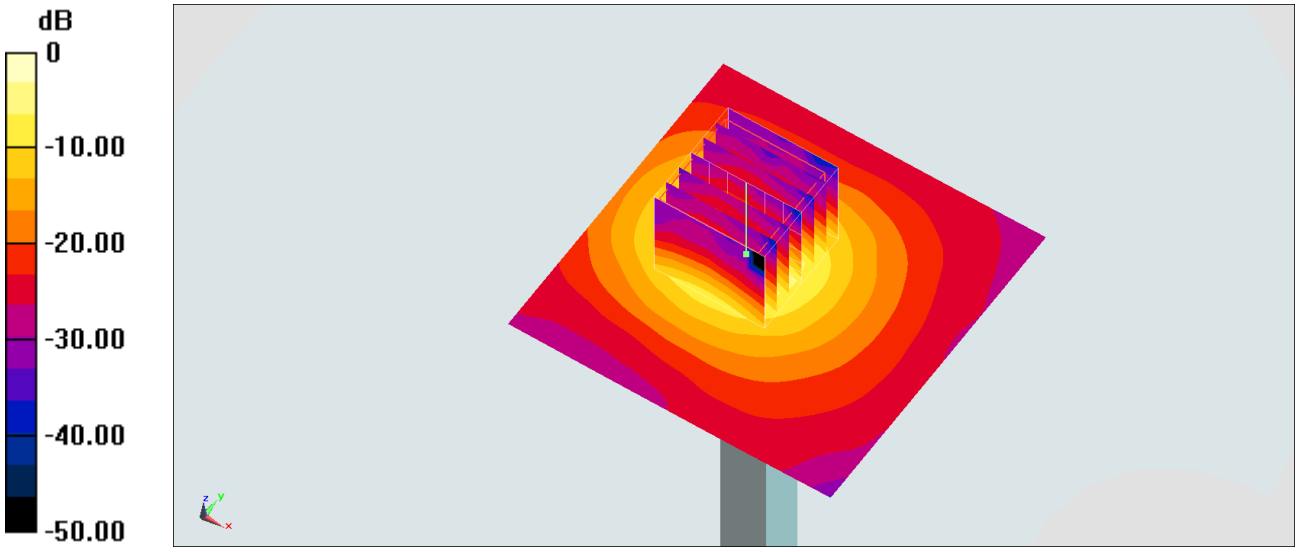


0 dB = 20.8 W/kg = 13.18 dBW/kg

## System Check_Head_5750MHz

### DUT: D5GHzV2-1006

Communication System: CW ; Frequency: 5750 MHz;Duty Cycle: 1:1
Medium: HSL_5G_181002 Medium parameters used: f = 5750 MHz; $\sigma$ = 5.14 S/m; $\varepsilon_r$ = 36.313; $\rho$ = 1000 kg/m$^3$
Ambient Temperature：23.6 ℃; Liquid Temperature：22.6 ℃

DASY5 Configuration:
- Probe: EX3DV4 - SN7306;ConvF(5, 5, 5) ;Calibrated: 2018/7/26
- Sensor-Surface: 1.4mm (Mechanical Surface Detection)
- Electronics: DAE4 Sn1399; Calibrated: 2017/11/16
- Phantom: SAM-Left; Type: QD 000 P40 C; Serial: TP-1446
- Measurement SW: DASY52, Version 52.10 (1);SEMCAD X Version 14.6.11 (7439)

**Pin=100mW/Area Scan (71x71x1):** Interpolated grid: dx=1.000 mm, dy=1.000 mm
Maximum value of SAR (interpolated) = 21.8 W/kg

**Pin=100mW/Zoom Scan (7x7x7)/Cube 0:** Measurement grid: dx=4mm, dy=4mm, dz=1.4mm
Reference Value = 73.78 V/m; Power Drift = -0.16 dB
Peak SAR (extrapolated) = 40.7 W/kg
**SAR(1 g) = 8.61 W/kg; SAR(10 g) = 2.4 W/kg**
Maximum value of SAR (measured) = 21.7 W/kg

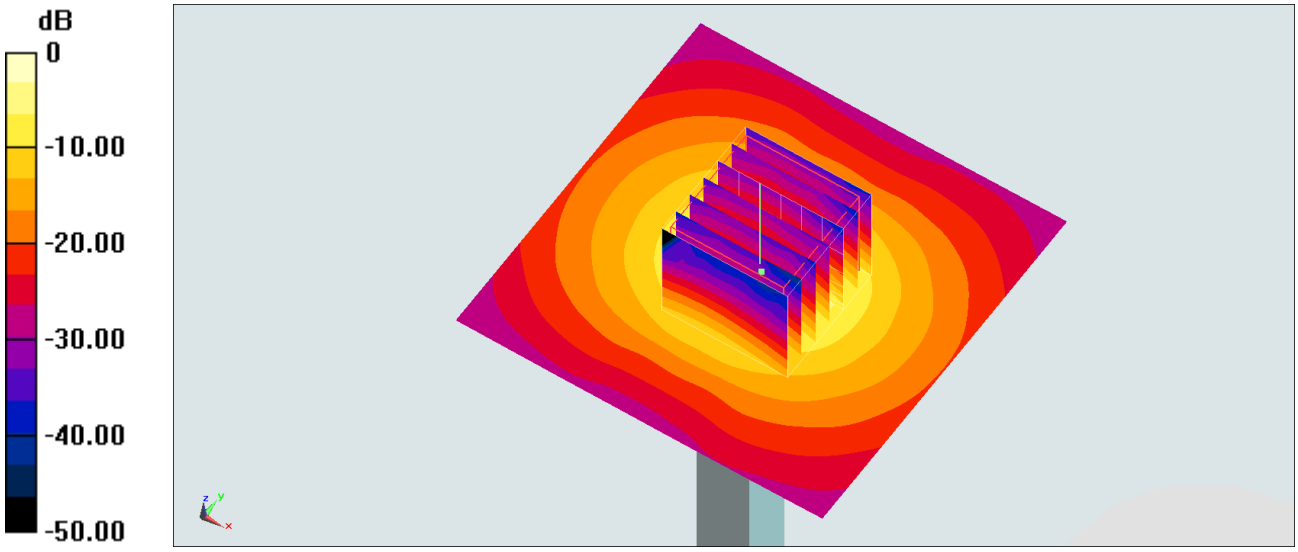


0 dB = 21.7 W/kg = 13.36 dBW/kg

## System Check_Body_5750MHz

### DUT: D5GHzV2-1006

Communication System: CW; Frequency: 5750 MHz;Duty Cycle: 1:1
Medium: MSL_5G_180920 Medium parameters used: f = 5750 MHz; $\sigma$ = 6.035 S/m; $\varepsilon_r$ = 47.282; $\rho$ = 1000 kg/m$^3$
Ambient Temperature：23.2 ℃; Liquid Temperature：22.2 ℃

DASY5 Configuration
- Probe: EX3DV4 - SN7346;ConvF(4.52, 4.52, 4.52) ;Calibrated: 2018/2/28
- Sensor-Surface: 1.4mm (Mechanical Surface Detection)
- Electronics: DAE4 Sn1399; Calibrated: 2017/11/16
- Phantom: SAM_Right; Type: QD000P40CD; Serial: S/N:1796
- Measurement SW: DASY52, Version 52.10 (1); SEMCAD X Version 14.6.11 (7439)

**Pin=100mW/Area Scan (71x71x1):** Interpolated grid: dx=1.000 mm, dy=1.000 mm
Maximum value of SAR (interpolated) = 18.3 W/kg

**Pin=100mW/Zoom Scan (7x7x7)/Cube 0:** Measurement grid: dx=4mm, dy=4mm, dz=1.4mm
Reference Value = 63.98 V/m; Power Drift = -0.02 dB
Peak SAR (extrapolated) = 32.4 W/kg
**SAR(1 g) = 7.43 W/kg; SAR(10 g) = 2.06 W/kg**
Maximum value of SAR (measured) = 18.5 W/kg

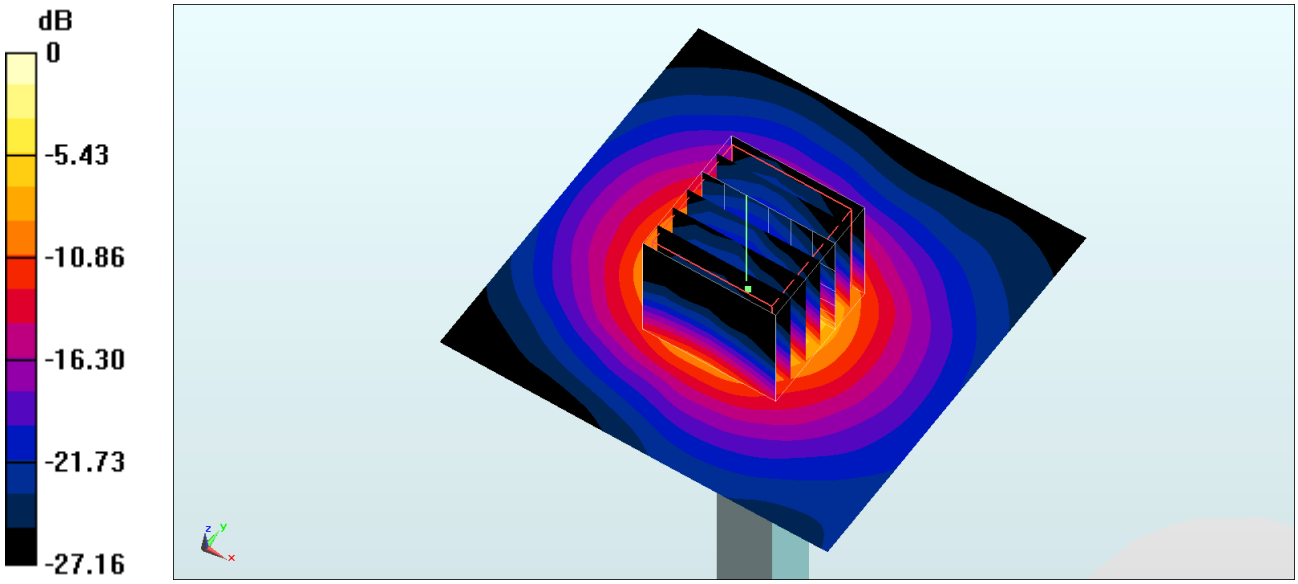


0 dB = 18.5 W/kg = 12.67 dBW/kg

# System Check_Body_5750MHz

## DUT: D5GHzV2-1203

Communication System: CW ; Frequency: 5750 MHz;Duty Cycle: 1:1
Medium: MSL_5G_181001 Medium parameters used: f = 5750 MHz; $\sigma$ = 5.803 S/m; $\varepsilon_r$ = 49.652; $\rho$ = 1000 kg/m$^3$
Ambient Temperature：23.6 ℃; Liquid Temperature：22.6 ℃

DASY5 Configuration:
- Probe: EX3DV4 - SN7306;ConvF(4.37, 4.37, 4.37) ;Calibrated: 2018/7/26
- Sensor-Surface: 1.4mm (Mechanical Surface Detection)
- Electronics: DAE4 Sn1399; Calibrated: 2017/11/16
- Phantom: SAM-Left; Type: QD 000 P40 C; Serial: TP-1446
- Measurement SW: DASY52, Version 52.10 (1);SEMCAD X Version 14.6.11 (7439)

**Pin=100mW/Area Scan (71x71x1):** Interpolated grid: dx=1.000 mm, dy=1.000 mm
Maximum value of SAR (interpolated) = 18.3 W/kg

**Pin=100mW/Zoom Scan (7x7x7)/Cube 0:** Measurement grid: dx=4mm, dy=4mm, dz=1.4mm
Reference Value = 64.56 V/m; Power Drift = -0.12 dB
Peak SAR (extrapolated) = 33.5 W/kg
**SAR(1 g) = 7.42 W/kg; SAR(10 g) = 2.08 W/kg**
Maximum value of SAR (measured) = 19.5 W/kg

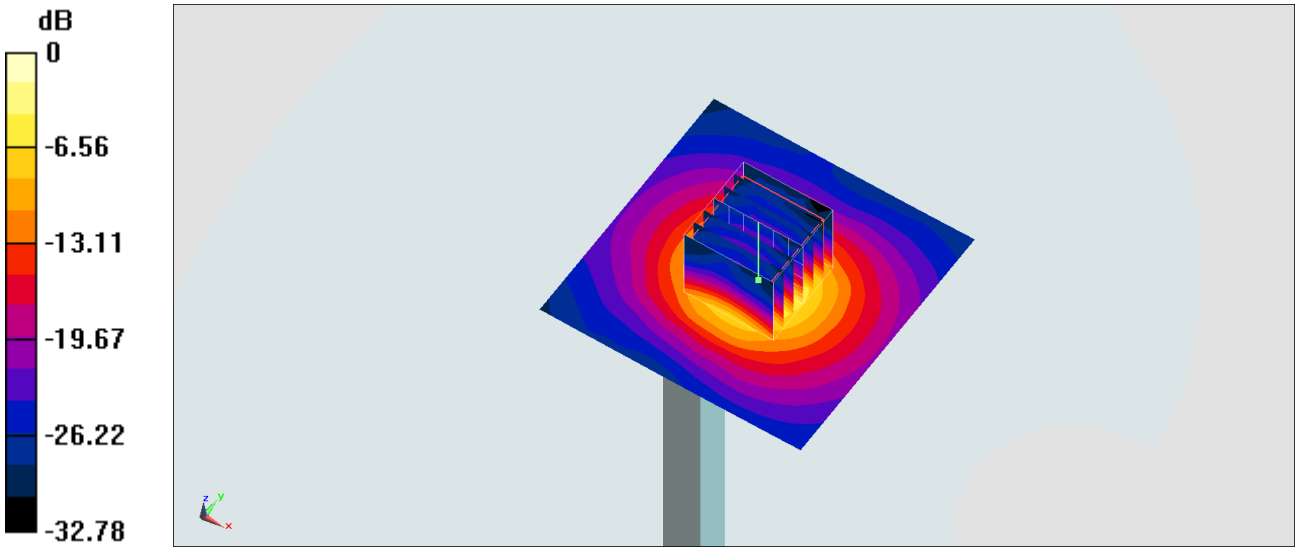


0 dB = 19.5 W/kg = 12.90 dBW/kg