FCC RADIO TEST REPORT

FCC ID	:	**IHDT56XP2**
Equipment	:	**Mobile Cellular Phone**
Brand Name	:	**Motorola**
Model Name	:	**XT1962-4**
Applicant	:	**Motorola Mobility LLC** **222 W,Merchandise Mart Plaza, Chicago IL 60654 USA**
Manufacturer	:	**Motorola Mobility LLC** **222 W,Merchandise Mart Plaza, Chicago IL 60654 USA**
Standard	:	**47 CFR Part 2, 22(H), 24(E), 27(L)**

The product was received on Sep. 08, 2018 and testing was started from Sep. 28, 2018 and completed on Sep. 29, 2018. We, SPORTON INTERNATIONAL INC., would like to declare that the tested sample has been evaluated in accordance with the test procedures given in ANSI / TIA-603-E and has been in compliance with the applicable technical standards.

The report must not be used by the client to claim product certification, approval, or endorsement by TAF or any agency of government.

The test results in this variant report apply exclusively to the tested model / sample. Without written approval of SPORTON INTERNATIONAL INC. EMC & Wireless Communications Laboratory, the test report shall not be reproduced except in full.

Approved by: Joseph Lin

SPORTON INTERNATIONAL INC. EMC & Wireless Communications Laboratory
No. 52, Huaya 1st Rd., Guishan Dist., Taoyuan City, Taiwan (R.O.C.)

Table of Contents

History of this test report **3**
Summary of Test Result **4**
1 General Description **5**
1.1 Product Feature of Equipment Under Test 5
1.2 Product Specification of Equipment Under Test 7
1.3 Modification of EUT 7
1.4 Maximum ERP/EIRP Power, Frequency Tolerance, and Emission Designator 8
1.5 Testing Location 9
1.6 Applicable Standards 9
2 Test Configuration of Equipment Under Test **10**
2.1 Test Mode 10
2.2 Connection Diagram of Test System 11
2.3 Support Unit used in test configuration 11
2.4 Frequency List of Low/Middle/High Channels 12
3 Conducted Test Result **13**
3.1 Measuring Instruments 13
3.2 Conducted Output Power and ERP/EIRP 14
4 Radiated Test Items **15**
4.1 Measuring Instruments 15
4.2 Field Strength of Spurious Radiation Measurement 16
5 List of Measuring Equipment **17**
6 Uncertainty of Evaluation **19**
Appendix A. Test Results of Conducted Test
Appendix B. Test Results of ERP/EIRP and Radiated Test

History of this test report

Report No.	Version	Description	Issued Date
FG890804-01A	01	Initial issue of report	Oct. 24, 2018

Summary of Test Result

Report Clause	Ref Std. Clause	Test Items	Result (PASS/FAIL)	Remark
3.2	§2.1046	Conducted Output Power	Pass	-
	§22.913 (a)(2)	Effective Radiated Power		
	§24.232 (c)	Equivalent Isotropic Radiated Power		
	§27.50 (d)(4)	Equivalent Isotropic Radiated Power		
-	§24.232 (d)	Peak-to-Average Ratio	Not Required	-
-	§2.1049 §22.917 (b) §24.238 (b) §27.53 (g)	Occupied Bandwidth	Not Required	-
-	§2.1051 §22.917 (a) §24.238 (a) §27.53 (g)	Band Edge Measurement	Not Required	-
-	§2.1051 §22.917 (a) §24.238 (a) §27.53 (g)	Conducted Emission	Not Required	-
-	§2.1055 §22.355	Frequency Stability Temperature & Voltage	Not Required	-
	§2.1055 §24.235 §27.54			-
4.2	§2.1053 §22.917 (a) §24.238 (a) §27.53 (h)	Field Strength of Spurious Radiation	Pass	Under limit 18.72 dB at 5730.000 MHz

Remark:

1. Not required means after assessing, test items are not necessary to carry out.

2. This is a variant report. All the test cases were performed on original report which can be referred to Sporton Report Number FG890804A.

Reviewed by: Wii Chang

Report Producer: Natasha Hsieh

1 General Description

1.1 Product Feature of Equipment Under Test

Product Feature		
Equipment	Mobile Cellular Phone	
Brand Name	Motorola	
Model Name	XT1962-4	
Sample 1	Dual SIM	
Sample 2	Single SIM	
FCC ID	IHDT56XP2	
IMEI Code	**Conducted :**	IMEI 1: 355570090015416 IMEI 2: 355570090015424
	Radiation :	IMEI 1: 355570090016398 IMEI 2: 355570090016406
EUT supports Radios application	GSM/EGPRS/WCDMA/HSPA/LTE/GNSS/FM WLAN 11b/g/n HT20 WLAN 11a/n HT20/HT40 Bluetooth BR/EDR/LE	
HW Version	DVT1B	
EUT Stage	Identical Prototype	

Remark: The above EUT's information was declared by manufacturer.

Accessory List		
AC Adapter 1	Brand Name :	Motorola
	Model Name :	SC-51
	Manufacturer :	Salom
AC Adapter 1	Brand Name :	Motorola
	Model Name :	SC-52
	Manufacturer :	Salom
AC Adapter 1	Brand Name :	Motorola
	Model Name :	SC-57
	Manufacturer :	Salom
AC Adapter 1	Brand Name :	Motorola
	Model Name :	SC-56
	Manufacturer :	Salom
AC Adapter 1	Brand Name :	Motorola
	Model Name :	SC-52
	Manufacturer :	Salom
AC Adapter 1	Brand Name :	Motorola
	Model Name :	SC-57
	Manufacturer :	Flex
AC Adapter 2	Brand Name :	Motorola
	Model Name :	SC-51
	Manufacturer :	Chenyang
AC Adapter 2	Brand Name :	Motorola
	Model Name :	SC-52
	Manufacturer :	Chenyang
AC Adapter 2	Brand Name :	Motorola
	Model Name :	SC-56
	Manufacturer :	Chenyang
AC Adapter 2	Brand Name :	Motorola
	Model Name :	SC-57
	Manufacturer :	Cliptech
Battery	Brand Name :	Motorola
	Model Name :	JG30
	Manufacturer :	Amperex
Earphone	Brand Name :	Motorola
	Model Name :	SH38C37773
	Manufacturer :	Lyand
USB Cable 1	Brand Name :	Luxshare
	Model Name :	SKN6473A
USB Cable 2	Brand Name :	Cabletech
	Model Name :	SKN6473A
USB Cable 3	Brand Name :	Saibao
	Model Name :	SKN6473A

1.2 Product Specification of Equipment Under Test

Standards-related Product Specification	
Tx Frequency	**GSM/GPRS/EDGE:** 850: 824.2 MHz ~ 848.8 MHz 1900: 1850.2 MHz ~ 1909.8 MHz **WCDMA:** Band V: 826.4 MHz ~ 846.6 MHz Band II: 1852.4 MHz ~ 1907.6 MHz Band IV: 1712.4 MHz ~ 1752.6 MHz
Rx Frequency	**GSM/GPRS/EDGE:** 850: 869.2 MHz ~ 893.8 MHz 1900: 1930.2 MHz ~ 1989.8 MHz **WCDMA:** Band V: 871.4 MHz ~ 891.6 MHz Band II: 1932.4 MHz ~ 1987.6 MHz Band IV: 2112.4 MHz ~ 2152.6 MHz
Maximum Output Power to Antenna	**GSM/GPRS/EDGE:** 850: 33.20 dBm 1900: 29.82 dBm **WCDMA:** Band V: 23.45 dBm Band II: 23.16 dBm Band IV: 22.91 dBm
Antenna Type	Fixed Internal Antenna and Dipole Antenna
Antenna Gain	Cellular Band: 0 dBi PCS Band: 2 dBi AWS Band: 2 dBi
Type of Modulation	GSM: GMSK GPRS: GMSK EDGE: GMSK / 8PSK WCDMA: BPSK (Uplink) HSDPA: 64QAM (Downlink) HSUPA: QPSK (Uplink)

1.3 Modification of EUT

No modifications are made to the EUT during all test items.

1.4 Maximum ERP/EIRP Power, Frequency Tolerance, and Emission Designator

FCC Rule	Frequency Range (MHz)	System	Type of Modulation	Maximum ERP/EIRP (W)	Frequency Tolerance (ppm)	Emission Designator
Part 22	824.2 ~848.8	GSM850 GPRS class 8	GMSK	1.2735	-	-
Part 22	824.2 ~848.8	GSM850 EDGE class 8	8PSK	0.3006	-	-
Part 22	826.4 ~846.6	WCDMA Band V RMC 12.2Kbps	BPSK	0.1349	-	-
Part 24	1850.2 ~1909.8	GSM1900 GPRS class 8	GMSK	1.5205	-	-
Part 24	1850.2 ~1909.8	GSM1900 EDGE class 8	8PSK	0.6166	-	-
Part 24	1852.4 ~ 1907.6	WCDMA Band II RMC 12.2Kbps	BPSK	0.3281	-	-
Part 27	1712.4 ~ 1752.6	WCDMA Band IV RMC 12.2Kbps	BPSK	0.3097	-	-

1.5 Testing Location

Sporton Lab is accredited to ISO 17025 by Taiwan Accreditation Foundation (TAF code : 1190) and the FCC designation No. TW1190 under the FCC 2.948(e) by Mutual Recognition Agreement (MRA) in FCC Test.

Test Site	SPORTON INTERNATIONAL INC.	
Test Site Location	No.52, Huaya 1st Rd., Guishan Dist., Taoyuan City, Taiwan (R.O.C.) TEL: +886-3-327-3456 FAX: +886-3-328-4978	
Test Site No.	**Sporton Site No.**	
	TH05-HY	03CH07-HY

Note: The test site complies with ANSI C63.4 2014 requirement.

1.6 Applicable Standards

According to the specifications of the manufacturer, the EUT must comply with the requirements of the following standards:

- ANSI C63.26-2015
- ANSI / TIA-603-E
- 47 CFR Part 2, 22(H), 24(E), 27(L)
- FCC KDB 971168 D01 Power Meas. License Digital Systems v03r01
- FCC KDB 412172 D01 Determining ERP and EIRP v01r01

Remark:

1. All test items were verified and recorded according to the standards and without any deviation during the test.
2. This EUT has also been tested and complied with the requirements of FCC Part 15, Subpart B, recorded in a separate test report.

2 Test Configuration of Equipment Under Test

2.1 Test Mode

Antenna port conducted and radiated test items were performed according to KDB 971168 D01 Power Meas. License Digital Systems v03r01 with maximum output power.

For radiated measurement, pre-scanned in three orthogonal panels, X, Y, Z. The worst cases (X plane for Cellular Band and AWS Band and Z plane for PCS Band) were recorded in this report.

Radiated emissions were investigated as following frequency range:

1. 30 MHz to 9000 MHz for GSM850 and WCDMA Band V.
2. 30 MHz to 18000 MHz for WCDMA Band IV.
3. 30 MHz to 19100 MHz for GSM1900 and WCDMA Band II.

All modes and data rates and positions were investigated.

Test modes are chosen to be reported as the worst case configuration below:

Test Modes		
Band	**Radiated TCs**	**Conducted TCs**
GSM 850	■ GPRS Class 8 Link ■ EDGE Class 8 Link	■ GPRS Class 8 Link ■ EDGE Class 8 Link
GSM 1900	■ GPRS Class 8 Link ■ EDGE Class 8 Link	■ GPRS Class 8 Link ■ EDGE Class 8 Link
WCDMA Band V	■ RMC 12.2Kbps Link	■ RMC 12.2Kbps Link
WCDMA Band II	■ RMC 12.2Kbps Link	■ RMC 12.2Kbps Link
WCDMA Band IV	■ RMC 12.2Kbps Link	■ RMC 12.2Kbps Link

Remark: All the radiated test cases were performed with Adapter 1 and USB Cable 1 Type C.

2.2 Connection Diagram of Test System

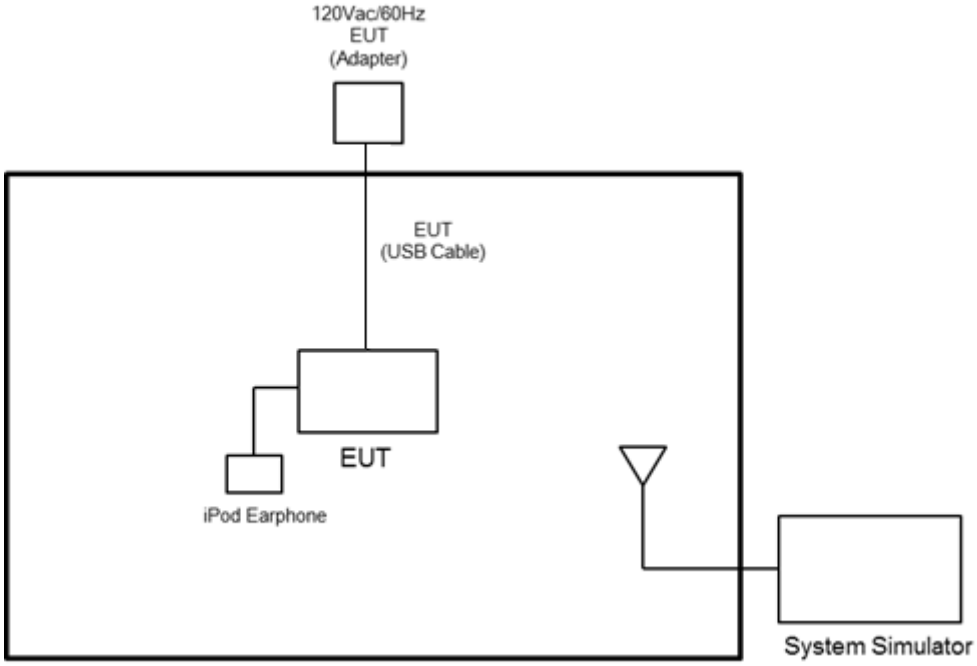

2.3 Support Unit used in test configuration

Item	Equipment	Trade Name	Model No.	FCC ID	Data Cable	Power Cord
1.	LTE Base Station	Anritsu	MT8820C	N/A	N/A	Unshielded, 1.8 m
2.	System Simulator	R&S	CMU 200	N/A	N/A	Unshielded, 1.8 m

2.4 Frequency List of Low/Middle/High Channels

Frequency List				
Band	**Channel/Frequency(MHz)**	**Lowest**	**Middle**	**Highest**
GSM850	Channel	128	189	251
	Frequency	824.2	836.4	848.8
WCDMA Band V	Channel	4132	4182	4233
	Frequency	826.4	836.4	846.6
GSM1900	Channel	512	661	810
	Frequency	1850.2	1880.0	1909.8
WCDMA Band II	Channel	9262	9400	9538
	Frequency	1852.4	1880.0	1907.6
WCDMA Band IV	Channel	1312	1413	1513
	Frequency	1712.4	1732.6	1752.6

3 Conducted Test Result

3.1 Measuring Instruments

See list of measuring instruments of this test report.

3.1.1 Test Setup

3.1.2 Conducted Output Power

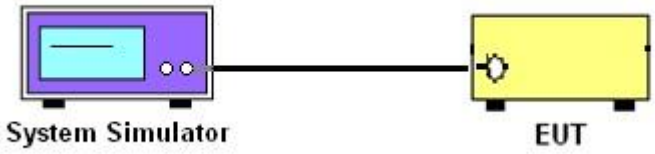

3.1.3 Test Result of Conducted Test

Please refer to Appendix A.

3.2 Conducted Output Power and ERP/EIRP

3.2.1 Description of the Conducted Output Power and ERP/EIRP

A system simulator was used to establish communication with the EUT. Its parameters were set to enforce EUT transmitting at the maximum power. The measured power in the radio frequency on the transmitter output terminals shall be reported.

The ERP of mobile transmitters must not exceed 7 Watts for GSM850 and WCDMA Band V.

The EIRP of mobile transmitters must not exceed 2 Watts for GSM1900 and WCDMA Band II.

The EIRP of mobile transmitters must not exceed 1 Watts for WCDMA Band IV.

According to KDB 412172 D01 Power Approach,

EIRP = $P_T + G_T – L_C$, ERP = EIRP -2.15, where

P_T = transmitter output power in dBm

G_T = gain of the transmitting antenna in dBi

L_C = signal attenuation in the connecting cable between the transmitter and antenna in dB

3.2.2 Test Procedures

1. The transmitter output port was connected to the system simulator.
2. Set EUT at maximum power through system simulator.
3. Select lowest, middle, and highest channels for each band and different modulation.
4. Measure the maximum burst average power for GSM and maximum average power for other modulation signal.

4 Radiated Test Items

4.1 Measuring Instruments

See list of measuring instruments of this test report.

4.1.1 Test Setup

For radiated test from 30MHz to 1GHz

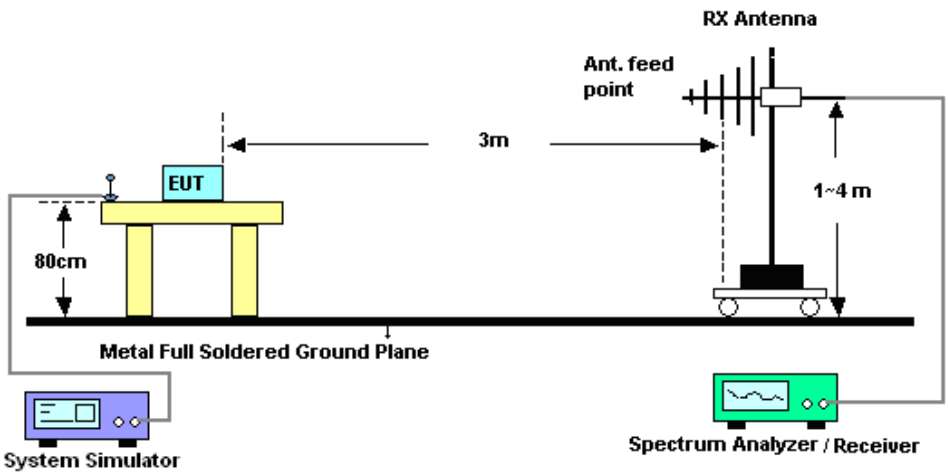

For radiated test above 1GHz

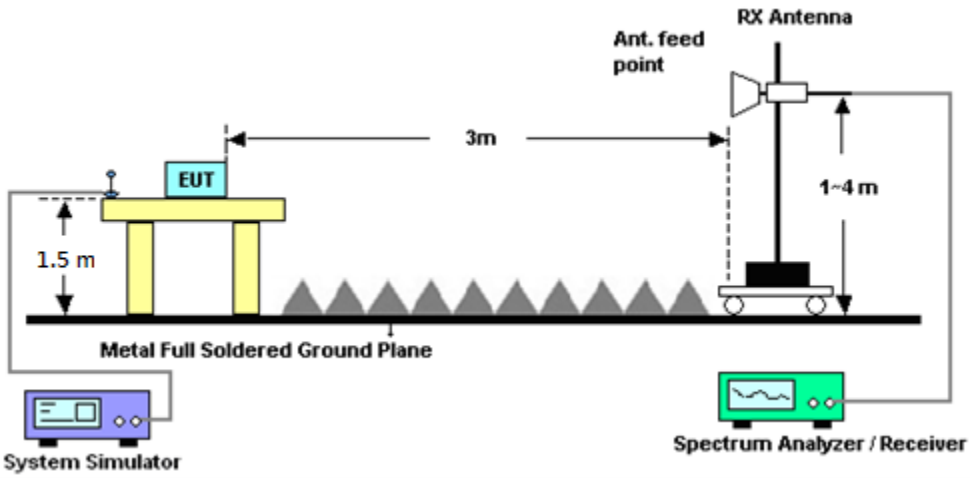

4.1.2 Test Result of Radiated Test

Please refer to Appendix B.

4.2 Field Strength of Spurious Radiation Measurement

4.2.1 Description of Field Strength of Spurious Radiated Measurement

The power of any emission outside of the authorized operating frequency ranges must be attenuated below the transmitter power (P) by a factor of at least 43 + 10 log (P) dB. The spectrum is scanned from 30 MHz up to a frequency including its 10th harmonic.

4.2.2 Test Procedures

The testing follows FCC KDB 971168 D01 v03r01 Section 5.8 and ANSI / TIA-603-E Section 2.2.12.

1. The EUT was placed on a rotatable wooden table 0.8 meters for frequency below 1GHz and 1.5 meter for frequency above 1GHz above the ground.
2. The EUT was set 3 meters from the receiving antenna, which was mounted on the antenna tower.
3. The table was rotated 360 degrees to determine the position of the highest spurious emission.
4. The height of the receiving antenna is varied between one meter and four meters to search for the maximum spurious emission for both horizontal and vertical polarizations.
5. Make the measurement with the spectrum analyzer's RBW = 1MHz, VBW = 3MHz, taking record of maximum spurious emission.
6. A horn antenna was substituted in place of the EUT and was driven by a signal generator.
7. Tune the output power of signal generator to the same emission level with EUT maximum spurious emission.
8. Taking the record of output power at antenna port.
9. Repeat step 7 to step 8 for another polarization.
10. EIRP (dBm) = S.G. Power – Tx Cable Loss + Tx Antenna Gain
11. ERP (dBm) = EIRP - 2.15
12. The RF fundamental frequency should be excluded against the limit line in the operating frequency band.
13. The limit line is derived from 43 + 10log(P) dB below the transmitter power P(Watts)

5 List of Measuring Equipment

Instrument	Manufacturer	Model No.	Serial No.	Characteristics	Calibration Date	Test Date	Due Date	Remark
LTE Base Station	Anritsu	MT8820C	6201432821	GSM/GPRS/WCDMA/LTE	Oct. 13, 2017	Sep. 28, 2018	Oct. 12, 2018	Conducted (TH05-HY)
Programmable Power Supply	GW Instek	PSS-2005	EL890089	1V~20V 0.5A~5A	Jan. 12, 2018	Sep. 28, 2018	Jan. 11, 2019	Conducted (TH05-HY)
Coupler	Warison	1-18GHz 20 dB 25WSMA Directional Coupler	#B	1G~18GHz	Dec. 04, 2017	Sep. 28, 2018	Dec. 03, 2018	Conducted (TH05-HY)
Bilog Antenna	TESEQ	CBL 6111D&00800N1D01N-06	35419&03	30MHz to 1GHz	Dec. 18, 2017	Sep. 28, 2018~ Sep. 29, 2018	Dec. 17, 2018	Radiation (03CH07-HY)
Double Ridge Horn Antenna	ESCO	3117	00211469	1GHz ~ 18GHz	Aug. 06, 2018	Sep. 28, 2018~ Sep. 29, 2018	Aug. 05, 2019	Radiation (03CH07-HY)
Double Ridge Horn Antenna	ESCO	3117	00066583	1GHz ~ 18GHz	Aug. 06, 2018	Sep. 28, 2018~ Sep. 29, 2018	Aug. 05, 2019	Radiation (03CH07-HY)
Preamplifier	MITEQ	AMF-7D-00101800-30-10P	1590075	1GHz ~ 18GHz	Apr. 25, 2018	Sep. 28, 2018~ Sep. 29, 2018	Apr. 24, 2019	Radiation (03CH07-HY)
Spectrum Analyzer	Agilent	N9010A	MY53470118	10Hz~44GHz	Apr. 17, 2018	Sep. 28, 2018~ Sep. 29, 2018	Apr. 16, 2019	Radiation (03CH07-HY)
RF Cable	HUBER + SUHNER	SUCOFLEX 104	MY28655/4, MY24971/4, MY15682/4	30MHz~1GHz	Feb. 27, 2018	Sep. 28, 2018~ Sep. 29, 2018	Feb. 26, 2019	Radiation (03CH07-HY)
RF Cable	HUBER + SUHNER	SUCOFLEX 104	MY28655/4, MY24971/4, MY15682/4	1GHz~18GHz	Feb. 27, 2018	Sep. 28, 2018~ Sep. 29, 2018	Feb. 26, 2019	Radiation (03CH07-HY)
RF Cable	HUBER + SUHNER	SUCOFLEX 102	MY2858/2	18GHz~40GHz	Feb. 27, 2018	Sep. 28, 2018~ Sep. 29, 2018	Feb. 26, 2019	Radiation (03CH07-HY)
Controller	ChainTek	Chaintek 3000	N/A	Control Turn table	N/A	Sep. 28, 2018~ Sep. 29, 2018	N/A	Radiation (03CH07-HY)
Controller	Max-Full	MF7802	MF780208368	Control Ant Mast	N/A	Sep. 28, 2018~ Sep. 29, 2018	N/A	Radiation (03CH07-HY)
Antenna Mast	Max-Full	MFA520BS	N/A	1m~4m	N/A	Sep. 28, 2018~ Sep. 29, 2018	N/A	Radiation (03CH07-HY)
Turn Table	ChainTek	Chaintek 3000	N/A	0~360 Degree	N/A	Sep. 28, 2018~ Sep. 29, 2018	N/A	Radiation (03CH07-HY)
Amplifier	MITEQ	TTA1840-35-HG	1871923	18GHz~40GHz, VSWR : 2.5:1 max	Jul. 16, 2018	Sep. 28, 2018~ Sep. 29, 2018	Jul. 15, 2019	Radiation (03CH07-HY)

Instrument	Manufacturer	Model No.	Serial No.	Characteristics	Calibration Date	Test Date	Due Date	Remark
SHF-EHF Horn Antenna	SCHWARZBECK	BBHA 9170	BBHA9170251	18GHz- 40GHz	Nov. 10, 2017	Sep. 28, 2018~ Sep. 29, 2018	Nov. 09, 2018	Radiation (03CH07-HY)
EMI Test Receiver	Agilent	N9038A(MXE)	MY53290053	20Hz to 26.5GHz	Jan. 16, 2018	Sep. 28, 2018~ Sep. 29, 2018	Jan. 15, 2019	Radiation (03CH07-HY)
Signal Generator	Rohde & Schwarz	SMF100A	101107	100kHz~40GHz	May 22, 2018	Sep. 28, 2018~ Sep. 29, 2018	May 21, 2019	Radiation (03CH07-HY)
Software	Audix	E3 6.2009-8-24	80504004656H	N/A	N/A	Sep. 28, 2018~ Sep. 29, 2018	N/A	Radiation (03CH07-HY)
Filter	Microwave	H1G013G1	SN477215	1.0G High Pass	Dec. 07, 2017	Sep. 28, 2018~ Sep. 29, 2018	Dec. 06, 2018	Radiation (03CH07-HY)
Filter	Microwave	H3G018G1	SN477220	3.0G High Pass	Nov. 21, 2017	Sep. 28, 2018~ Sep. 29, 2018	Nov. 20, 2018	Radiation (03CH07-HY)
Notch Filter	Wainwright	WRCT2500/2700-10/20-10SSK	SN3	WCDMA Band 8	Nov. 03, 2017	Sep. 28, 2018~ Sep. 29, 2018	Nov. 02, 2018	Radiation (03CH07-HY)
Notch Filter	Wainwright	WRCT1747.5-0.4/40-8SS	SN2	DCS 1800	Mar. 08, 2018	Sep. 28, 2018~ Sep. 29, 2018	Mar. 07, 2019	Radiation (03CH07-HY)
Notch Filter	Wainwright	WTRCD10-1710-1785-20-40-40SSK	SN1	1710-1785	May 22, 2018	Sep. 28, 2018~ Sep. 29, 2018	May 21, 2018	Radiation (03CH07-HY)
Notch Filter	Wainwright	WRCG1710-1785-1690-1805-60-12SS	SN6	AWS Band	Nov. 03, 2017	Sep. 28, 2018~ Sep. 29, 2018	Nov. 02, 2018	Radiation (03CH07-HY)

6 Uncertainty of Evaluation

Uncertainty of Radiated Emission Measurement (30 MHz ~ 1000 MHz)

Measuring Uncertainty for a Level of Confidence of 95% (U = 2Uc(y))	5.70

Uncertainty of Radiated Emission Measurement (1 GHz ~ 18 GHz)

Measuring Uncertainty for a Level of Confidence of 95% (U = 2Uc(y))	5.50

Uncertainty of Radiated Emission Measurement (18 GHz ~ 40 GHz)

Measuring Uncertainty for a Level of Confidence of 95% (U = 2Uc(y))	5.20

Appendix A. Test Results of Conducted Test

Conducted Output Power(Average power)

Conducted Power (*Unit: dBm)						
Band	GSM850			GSM1900		
Channel	128	189	251	512	661	810
Frequency	824.2	836.4	848.8	1850.2	1880	1909.8
GSM	33.18	33.01	33.05	29.57	29.76	29.80
GPRS class 8	33.20	33.02	33.07	29.58	29.77	29.82
GPRS class 10	30.21	30.19	29.92	26.66	26.70	26.66
GPRS class 11	28.10	28.08	27.99	24.68	24.80	24.72
GPRS class 12	26.63	26.67	26.63	23.20	23.32	23.24
EGPRS class 8	26.93	26.87	26.82	25.80	25.90	25.80
EGPRS class 10	26.72	26.68	26.65	25.60	25.72	25.66
EGPRS class 11	25.77	25.65	25.64	24.26	24.32	24.18
EGPRS class 12	24.37	24.32	24.22	22.76	22.90	22.83

Conducted Power (*Unit: dBm)						
Band	WCDMA Band V			WCDMA Band II		
Channel	4132	4182	4233	9262	9400	9538
Frequency	826.4	836.4	846.6	1852.4	1880	1907.6
RMC 12.2K	23.35	23.45	23.29	23.08	23.13	23.16
HSDPA Subtest-1	22.95	22.99	22.87	22.87	22.89	22.74
HSDPA Subtest-2	22.95	22.98	22.83	22.85	22.92	22.79
HSDPA Subtest-3	22.48	22.50	22.31	22.36	22.40	22.25
HSDPA Subtest-4	22.46	22.49	22.34	22.35	22.38	22.28
HSUPA Subtest-1	22.89	22.88	22.91	22.36	22.39	22.24
HSUPA Subtest-2	20.83	20.85	20.90	20.82	20.89	20.74
HSUPA Subtest-3	21.89	21.89	21.89	21.84	21.86	21.73
HSUPA Subtest-4	20.91	20.87	20.89	20.84	20.87	20.73
HSUPA Subtest-5	22.90	22.90	22.90	22.80	22.90	22.70

Conducted Power (*Unit: dBm)			
Band	WCDMA Band IV		
Channel	1312	1413	1513
Frequency	1712.4	1732.6	1752.6
RMC 12.2K	22.76	22.80	22.91
HSDPA Subtest-1	22.49	22.68	22.73
HSDPA Subtest-2	22.50	22.72	22.73
HSDPA Subtest-3	21.98	22.21	22.24
HSDPA Subtest-4	21.97	22.23	22.26
HSUPA Subtest-1	22.46	22.73	22.71
HSUPA Subtest-2	20.38	20.75	20.73
HSUPA Subtest-3	21.37	21.76	21.74
HSUPA Subtest-4	20.35	20.71	20.74
HSUPA Subtest-5	22.40	22.70	22.80

Appendix B. Test Results of ERP/EIRP and Radiated Test

ERP/EIRP

Channel	Mode	Conducted		ERP	
		Power (dBm)	Power (Watts)	ERP(dBm)	ERP(W)
Lowest	GSM850	33.20	2.0893	31.05	1.2735
Middle	GPRS class 8	33.02	2.0045	30.87	1.2218
Highest	(GT - LC = 0 dB)	33.07	2.0277	30.92	1.2359
Lowest	GSM850	26.93	0.4932	24.78	0.3006
Middle	EDGE class 8	26.87	0.4864	24.72	0.2965
Highest	(GT - LC = 0 dB)	26.82	0.4808	24.67	0.2931
Lowest	WCDMA Band V	23.35	0.2163	21.20	0.1318
Middle	RMC 12.2Kbps	23.45	0.2213	21.30	0.1349
Highest	(GT - LC = 0 dB)	23.29	0.2133	21.14	0.1300
Limit	ERP < 7W	Result		PASS	

Channel	Mode	Conducted		EIRP	
		Power (dBm)	Power (Watts)	EIRP(dBm)	EIRP(W)
Lowest	GSM1900	29.58	0.9078	31.58	1.4388
Middle	GPRS class 8	29.77	0.9484	31.77	1.5031
Highest	(GT - LC = 2 dB)	29.82	0.9594	31.82	1.5205
Lowest	GSM1900	25.80	0.3802	27.80	0.6026
Middle	EDGE class 8	25.90	0.3890	27.90	0.6166
Highest	(GT - LC = 2 dB)	25.80	0.3802	27.80	0.6026
Lowest	WCDMA Band II	23.08	0.2032	25.08	0.3221
Middle	RMC 12.2Kbps	23.13	0.2056	25.13	0.3258
Highest	(GT - LC = 2 dB)	23.16	0.2070	25.16	0.3281
Limit	EIRP < 2W	Result		PASS	

Channel	Mode	Conducted		EIRP	
		Power (dBm)	Power (Watts)	EIRP(dBm)	EIRP(W)
Lowest	WCDMA Band IV	22.76	0.1888	24.76	0.2992
Middle	RMC 12.2Kbps	22.80	0.1905	24.80	0.3020
Highest	(GT - LC = 2 dB)	22.91	0.1954	24.91	0.3097
Limit	EIRP < 1W	Result		PASS	

Radiated Spurious Emission

GSM850

GSM 850									
Channel	Frequency (MHz)	ERP (dBm)	Limit (dBm)	Over Limit (dB)	SPA Reading (dBm)	S.G. Power (dBm)	TX Cable loss (dB)	TX Antenna Gain (dBi)	Polarization (H/V)
Lowest	1648	-48.13	-13	-35.13	-60.51	-49.89	0.98	4.89	H
	2472	-49.75	-13	-36.75	-67.4	-51.63	1.28	5.32	H
	3296	-52.86	-13	-39.86	-72.53	-56.27	1.54	7.10	H
									H
									H
									H
									H
	1648	-48.86	-13	-35.86	-61.68	-50.62	0.98	4.89	V
	2472	-52.24	-13	-39.24	-70.23	-54.12	1.28	5.32	V
	3296	-54.12	-13	-41.12	-73.97	-57.53	1.54	7.10	V
									V
									V
									V
									V
Middle	1672	-49.34	-13	-36.34	-61.92	-51.02	0.99	4.82	H
	2512	-48.08	-13	-35.08	-65.7	-50.05	1.29	5.41	H
	3344	-54.06	-13	-41.06	-73.95	-57.67	1.56	7.31	H
									H
									H
									H
									H
	1672	-49.21	-13	-36.21	-62.16	-50.89	0.99	4.82	V
	2512	-45.95	-13	-32.95	-64.01	-47.92	1.29	5.41	V
	3344	-55.34	-13	-42.34	-75.42	-58.95	1.56	7.31	V
									V
									V
									V
									V

Highest	1696	-48.97	-13	-35.97	-61.74	-50.57	1.00	4.75	H
	2544	-49.87	-13	-36.87	-67.49	-51.85	1.30	5.44	H
	3392	-53.48	-13	-40.48	-73.6	-57.28	1.57	7.52	H
									H
									H
									H
									H
	1696	-51.64	-13	-38.64	-64.85	-53.24	1.00	4.75	V
	2544	-50.33	-13	-37.33	-68.45	-52.31	1.30	5.44	V
	3392	-56.08	-13	-43.08	-76.36	-59.88	1.57	7.52	V
									V
									V
									V
									V

Remark: Spurious emissions within 30-1000MHz were found more than 20dB below limit line.

EDGE 850

EDGE 850									
Channel	Frequency (MHz)	ERP (dBm)	Limit (dBm)	Over Limit (dB)	SPA Reading (dBm)	S.G. Power (dBm)	TX Cable loss (dB)	TX Antenna Gain (dBi)	Polarization (H/V)
Lowest	1648	-62.48	-13	-49.48	-74.89	-64.24	0.98	4.89	H
	2472	-56.09	-13	-43.09	-73.57	-57.97	1.28	5.32	H
	3296	-57.72	-13	-44.72	-77.43	-61.13	1.54	7.10	H
									H
									H
									H
									H
	1648	-61.69	-13	-48.69	-74.43	-63.45	0.98	4.89	V
	2472	-55.79	-13	-42.79	-73.92	-57.67	1.28	5.32	V
	3296	-56.48	-13	-43.48	-76.42	-59.89	1.54	7.10	V
									V
									V
									V
									V
Middle	1672	-61.71	-13	-48.71	-73.34	-63.39	0.99	4.82	H
	2512	-55.51	-13	-42.51	-73.1	-57.48	1.29	5.41	H
	3344	-57.27	-13	-44.27	-77.14	-60.88	1.56	7.31	H
									H
									H
									H
									H
	1672	-60.87	-13	-47.87	-73.92	-62.55	0.99	4.82	V
	2512	-56.31	-13	-43.31	-74.36	-58.28	1.29	5.41	V
	3344	-57.44	-13	-44.44	-77.55	-61.05	1.56	7.31	V
									V
									V
									V
									V

Highest	1696	-58.73	-13	-45.73	-71.5	-60.33	1.00	4.75	H
	2544	-55.88	-13	-42.88	-73.5	-57.86	1.30	5.44	H
	3392	-57.57	-13	-44.57	-77.69	-61.37	1.57	7.52	H
									H
									H
									H
									H
	1696	-58.71	-13	-45.71	-71.92	-60.31	1.00	4.75	V
	2544	-56.78	-13	-43.78	-74.9	-58.76	1.30	5.44	V
	3392	-57.22	-13	-44.22	-77.41	-61.02	1.57	7.52	V
									V
									V
									V
									V

Remark: Spurious emissions within 30-1000MHz were found more than 20dB below limit line.

WCDMA 850

WCDMA 850									
Channel	Frequency (MHz)	ERP (dBm)	Limit (dBm)	Over Limit (dB)	SPA Reading (dBm)	S.G. Power (dBm)	TX Cable loss (dB)	TX Antenna Gain (dBi)	Polarization (H/V)
Lowest	1656	-63.09	-13	-50.09	-75.48	-64.82	0.98	4.86	H
	2480	-58.64	-13	-45.64	-76.03	-60.55	1.28	5.34	H
	3304	-57.38	-13	-44.38	-76.93	-60.82	1.54	7.14	H
									H
									H
									H
									H
	1656	-61.91	-13	-48.91	-74.75	-63.64	0.98	4.86	V
	2480	-57.91	-13	-44.91	-75.95	-59.82	1.28	5.34	V
	3304	-57.55	-13	-44.55	-77.38	-60.99	1.54	7.14	V
									V
									V
									V
									V
Middle	1672	-62.64	-13	-49.64	-75.3	-64.32	0.99	4.82	H
	2512	-58.32	-13	-45.32	-75.89	-60.29	1.29	5.41	H
	3344	-57.74	-13	-44.74	-77.62	-61.35	1.56	7.31	H
									H
									H
									H
									H
	1672	-62.21	-13	-49.21	-75.34	-63.89	0.99	4.82	V
	2512	-58.49	-13	-45.49	-76.58	-60.46	1.29	5.41	V
	3344	-57.74	-13	-44.74	-77.78	-61.35	1.56	7.31	V
									V
									V
									V
									V

Highest	1696	-62.92	-13	-49.92	-75.69	-64.52	1.00	4.75	H
	2536	-58.66	-13	-45.66	-76.26	-60.64	1.30	5.43	H
	3384	-57.12	-13	-44.12	-77.1	-60.89	1.57	7.49	H
									H
									H
									H
									H
	1696	-62.01	-13	-49.01	-75.22	-63.61	1.00	4.75	V
	2536	-58.13	-13	-45.13	-76.22	-60.11	1.30	5.43	V
	3384	-56.82	-13	-43.82	-77.1	-60.59	1.57	7.49	V
									V
									V
									V
									V

Remark: Spurious emissions within 30-1000MHz were found more than 20dB below limit line.

WCDMA 1700

WCDMA 1700									
Channel	Frequency (MHz)	EIRP (dBm)	Limit (dBm)	Over Limit (dB)	SPA Reading (dBm)	S.G. Power (dBm)	TX Cable loss (dB)	TX Antenna Gain (dBi)	Polarization (H/V)
Lowest	3426	-56.47	-13	-43.47	-77.05	-62.56	1.58	7.67	H
	5137	-53.58	-13	-40.58	-77.54	-60.86	2.42	9.70	H
	6849	-51.58	-13	-38.58	-78.19	-59.56	2.64	10.62	H
									H
									H
									H
									H
	3426	-57.26	-13	-44.26	-77.85	-63.35	1.58	7.67	V
	5137	-53.16	-13	-40.16	-77.01	-60.44	2.42	9.70	V
	6849	-51.36	-13	-38.36	-77.9	-59.34	2.64	10.62	V
									V
									V
									V
									V
Middle	3468	-56.70	-13	-43.70	-77.69	-62.96	1.59	7.86	H
	5196	-52.77	-13	-39.77	-77.19	-60.02	2.45	9.70	H
	6930	-51.06	-13	-38.06	-77.98	-59.16	2.61	10.72	H
									H
									H
									H
									H
	3468	-56.81	-13	-43.81	-77.73	-63.07	1.59	7.86	V
	5196	-52.80	-13	-39.80	-77.08	-60.05	2.45	9.70	V
	6930	-51.19	-13	-38.19	-78.11	-59.29	2.61	10.72	V
									V
									V
									V
									V

	3505	-55.76	-13	-42.76	-76.65	-62.16	1.61	8.01	H
	5257	-48.22	-13	-35.22	-72.5	-55.43	2.49	9.70	H
	7010	-50.42	-13	-37.42	-77.14	-58.65	2.59	10.82	H
									H
									H
									H
									H
Highest	3505	-56.84	-13	-43.84	-77.63	-63.24	1.61	8.01	V
	5257	-47.48	-13	-34.48	-71.62	-54.69	2.49	9.70	V
	7010	-50.32	-13	-37.32	-77.1	-58.55	2.59	10.82	V
									V
									V
									V
									V

Remark: Spurious emissions within 30-1000MHz were found more than 20dB below limit line.

GPRS 1900

GPRS 1900									
Channel	Frequency (MHz)	EIRP (dBm)	Limit (dBm)	Over Limit (dB)	SPA Reading (dBm)	S.G. Power (dBm)	TX Cable loss (dB)	TX Antenna Gain (dBi)	Polarization (H/V)
Lowest	3702	-49.65	-13	-36.65	-70.62	-56.22	1.67	8.24	H
	5550	-33.03	-13	-20.03	-58.34	-40.1	2.65	9.72	H
	7398	-50.48	-13	-37.48	-77.65	-59.61	2.46	11.60	H
									H
									H
									H
									H
	3702	-49.35	-13	-36.35	-70.31	-55.92	1.67	8.24	V
	5550	-32.02	-13	-19.02	-57.3	-39.09	2.65	9.72	V
	7398	-50.52	-13	-37.52	-77.89	-59.65	2.46	11.60	V
									V
									V
									V
									V
Middle	3762	-45.34	-13	-32.34	-66.25	-51.97	1.69	8.31	H
	5640	-36.56	-13	-23.56	-62.06	-43.61	2.71	9.76	H
	7518	-50.23	-13	-37.23	-77.5	-59.62	2.42	11.81	H
									H
									H
									H
									H
	3762	-46.79	-13	-33.79	-67.72	-53.42	1.69	8.31	V
	5640	-38.03	-13	-25.03	-63.51	-45.08	2.71	9.76	V
	7518	-50.24	-13	-37.24	-77.75	-59.63	2.42	11.81	V
									V
									V
									V
									V

Highest	3822	-45.09	-13	-32.09	-65.94	-51.77	1.71	8.39	H
	5730	-31.72	-13	-18.72	-57.43	-38.75	2.76	9.79	H
	7638	-49.03	-13	-36.03	-76.62	-58.53	2.38	11.88	H
									H
									H
									H
									H
	3822	-42.19	-13	-29.19	-63.11	-48.87	1.71	8.39	V
	5730	-37.05	-13	-24.05	-62.75	-44.08	2.76	9.79	V
	7638	-48.70	-13	-35.70	-76.55	-58.2	2.38	11.88	V
									V
									V
									V
									V

Remark: Spurious emissions within 30-1000MHz were found more than 20dB below limit line.

EDGE1900

EDGE 1900									
Channel	Frequency (MHz)	EIRP (dBm)	Limit (dBm)	Over Limit (dB)	SPA Reading (dBm)	S.G. Power (dBm)	TX Cable loss (dB)	TX Antenna Gain (dBi)	Polarization (H/V)
Lowest	3702	-52.25	-13	-39.25	-73.22	-58.82	1.67	8.24	H
	5550	-38.90	-13	-25.90	-64.21	-45.97	2.65	9.72	H
	7398	-50.58	-13	-37.58	-77.75	-59.71	2.46	11.60	H
									H
									H
									H
									H
	3702	-53.41	-13	-40.41	-74.37	-59.98	1.67	8.24	V
	5550	-38.56	-13	-25.56	-63.84	-45.63	2.65	9.72	V
	7398	-50.68	-13	-37.68	-74.05	-59.81	2.46	11.60	V
									V
									V
									V
									V
Middle	3762	-51.54	-13	-38.54	-72.45	-58.17	1.69	8.31	H
	5640	-39.97	-13	-26.97	-65.47	-47.02	2.71	9.76	H
	7518	-50.55	-13	-37.55	-77.82	-59.94	2.42	11.81	H
									H
									H
									H
									H
	3762	-50.58	-13	-37.58	-71.51	-57.21	1.69	8.31	V
	5640	-36.66	-13	-23.66	-62.14	-43.71	2.71	9.76	V
	7518	-50.18	-13	-37.18	-77.69	-59.57	2.42	11.81	V
									V
									V
									V
									V

Highest	3822	-51.38	-13	-38.38	-72.23	-58.06	1.71	8.39	H
	5730	-39.36	-13	-26.36	-65.07	-46.39	2.76	9.79	H
	7638	-48.87	-13	-35.87	-76.46	-58.37	2.38	11.88	H
									H
									H
									H
									H
	3822	-51.88	-13	-38.88	-72.8	-58.56	1.71	8.39	V
	5730	-41.33	-13	-28.33	-67.03	-48.36	2.76	9.79	V
	7638	-48.85	-13	-35.85	-76.7	-58.35	2.38	11.88	V
									V
									V
									V
									V

Remark: Spurious emissions within 30-1000MHz were found more than 20dB below limit line.

WCDMA 1900

WCDMA 1900									
Channel	Frequency (MHz)	EIRP (dBm)	Limit (dBm)	Over Limit (dB)	SPA Reading (dBm)	S.G. Power (dBm)	TX Cable loss (dB)	TX Antenna Gain (dBi)	Polarization (H/V)
Lowest	3702	-56.10	-13	-43.10	-77.07	-62.67	1.67	8.24	H
	5562	-48.32	-13	-35.32	-73.63	-55.38	2.66	9.72	H
	7410	-50.77	-13	-37.77	-77.95	-59.93	2.46	11.62	H
									H
									H
									H
									H
	3702	-56.28	-13	-43.28	-77.24	-62.85	1.67	8.24	V
	5562	-48.28	-13	-35.28	-73.56	-55.344	2.66	9.72	V
	7410	-50.64	-13	-37.64	-78.03	-59.8	2.46	11.62	V
									V
									V
									V
									V
Middle	3762	-56.13	-13	-43.13	-77.04	-62.76	1.69	8.31	H
	5640	-48.30	-13	-35.30	-73.8	-55.35	2.71	9.76	H
	7518	-50.25	-13	-37.25	-77.52	-59.64	2.42	11.81	H
									H
									H
									H
									H
	3762	-56.74	-13	-43.74	-77.67	-63.37	1.69	8.31	V
	5640	-48.26	-13	-35.26	-73.74	-55.31	2.71	9.76	V
	7518	-50.12	-13	-37.12	-77.63	-59.51	2.42	11.81	V
									V
									V
									V
									V

Highest	3816	-54.23	-13	-41.23	-75.08	-60.91	1.70	8.38	H
	5724	-49.25	-13	-36.25	-74.96	-56.29	2.75	9.79	H
	7632	-49.10	-13	-36.10	-76.69	-58.59	2.39	11.88	H
									H
									H
									H
									H
	3816	-53.98	-13	-40.98	-74.9	-60.66	1.70	8.38	V
	5724	-50.11	-13	-37.11	-75.81	-57.15	2.75	9.79	V
	7632	-48.80	-13	-35.80	-76.65	-58.29	2.39	11.88	V
									V
									V
									V
									V

Remark: Spurious emissions within 30-1000MHz were found more than 20dB below limit line.