FCC RADIO TEST REPORT

FCC ID	:	**IHDT56XP2**
Equipment	:	**Mobile Cellular Phone**
Brand Name	:	**Motorola**
Model Name	:	**XT1962-4**
Applicant	:	**Motorola Mobility LLC** **222 W,Merchandise Mart Plaza, Chicago IL 60654 USA**
Manufacturer	:	**Motorola Mobility LLC** **222 W,Merchandise Mart Plaza, Chicago IL 60654 USA**
Standard	:	**47 CFR Part 2, 22(H), 24(E), 27**

The product was received on Sep. 08, 2018 and testing was started from Sep. 28, 2018 and completed on Sep. 29, 2018. We, SPORTON INTERNATIONAL INC., would like to declare that the tested sample has been evaluated in accordance with the test procedures given in ANSI / TIA-603-E and has been in compliance with the applicable technical standards.

The report must not be used by the client to claim product certification, approval, or endorsement by TAF or any agency of government.

The test results in this variant report apply exclusively to the tested model / sample. Without written approval of SPORTON INTERNATIONAL INC. EMC & Wireless Communications Laboratory, the test report shall not be reproduced except in full.

Approved by: Joseph Lin

SPORTON INTERNATIONAL INC. EMC & Wireless Communications Laboratory
No. 52, Huaya 1st Rd., Guishan Dist., Taoyuan City, Taiwan (R.O.C.)

Table of Contents

History of this test report **3**
Summary of Test Result **4**
1 General Description **6**
1.1 Product Feature of Equipment Under Test 6
1.2 Product Specification of Equipment Under Test 8
1.3 Modification of EUT 8
1.4 Emission Designator 9
1.5 Testing Location 11
1.6 Applicable Standards 11
2 Test Configuration of Equipment Under Test **12**
2.1 Test Mode 12
2.2 Connection Diagram of Test System 13
2.3 Support Unit used in test configuration and system 13
2.4 Frequency List of Low/Middle/High Channels 14
3 Conducted Test Items **17**
3.1 Measuring Instruments 17
3.2 Conducted Output Power and ERP/EIRP 18
4 Radiated Test Items **19**
4.1 Measuring Instruments 19
4.2 Radiated Spurious Emission 20
5 List of Measuring Equipment **21**
6 Uncertainty of Evaluation **23**
Appendix A. Test Results of Conducted Test
Appendix B. Test Results of ERP/EIRP and Radiated Test

History of this test report

Report No.	Version	Description	Issued Date
FG890804-01B	01	Initial issue of report	Oct. 24, 2018

Summary of Test Result

Report Clause	Ref Std. Clause	Test Items	Result (PASS/FAIL)	Remark
3.2	§2.1046	Conducted Output Power	Reporting only	-
	§22.913 (a)(2)	Effective Radiated Power (Band 5)	Pass	
	§27.50 (c)(10)	Effective Radiated Power (Band 12) (Band 17)		
	§24.232 (c) §27.50 (h)(2)	Equivalent Isotropic Radiated Power (Band 2)(Band 7)		
	§27.50 (d)(4)	Equivalent Isotropic Radiated Power (Band 4) (Band 66)		
-	§24.232 (d) §27.50 (d)(5)	Peak-to-Average Ratio	Not Required	-
-	§2.1049	Occupied Bandwidth	Not Required	-
-	§2.1051 §22.917 (a) §24.238 (a) §27.53 (g) §27.53 (h)	Conducted Band Edge Measurement (Band 2) (Band 4) (Band 5) (Band 12) (Band 17) (Band 66)	Not Required	-
	§2.1051 §27.53 (m)(4)	Conducted Band Edge Measurement (Band 7)		
-	§2.1051 §22.917 (a) §24.238 (a) §27.53 (g) §27.53 (h)	Conducted Spurious Emission (Band 2) (Band 4) (Band 5) (Band 12) (Band 17) (Band 66)	Not Required	-
	§2.1051 §27.53 (m)(4)	Conducted Spurious Emission (Band 7) (Band 38) (Band 41)		

Report Clause	Ref Std. Clause	Test Items	Result (PASS/FAIL)	Remark
-	§2.1055 §22.355 §24.235 §27.54	Frequency Stability Temperature & Voltage	Not Required	-
4.2	§2.1053 §22.917 (a) §24.238 (a) §27.53 (g) §27.53 (h)	Radiated Spurious Emission (Band 2) (Band 4) (Band 5) (Band 12) (Band 17)(Band 66)	Pass	Under limit 19.91 dB at 10098.000 MHz
	§2.1053 §27.53 (m)(4)	Radiated Spurious Emission (Band 7)		

Remark:

1. Not required means after assessing, test items are not necessary to carry out.

2. This is a variant report. All the test cases were performed on original report which can be referred to Sporton Report Number FG890804C.

Reviewed by: Wii Chang

Report Producer: Natasha Hsieh

1 General Description

1.1 Product Feature of Equipment Under Test

Product Feature		
Equipment	Mobile Cellular Phone	
Brand Name	Motorola	
Model Name	XT1962-4	
Sample 1	Dual SIM	
Sample 2	Single SIM	
FCC ID	IHDT56XP2	
IMEI Code	**Conducted :**	IMEI 1: 355570090015416 IMEI 2: 355570090015424
	Radiation :	IMEI 1: 355570090016398 IMEI 2: 355570090016406
EUT supports Radios application	GSM/EGPRS/WCDMA/HSPA/LTE/GNSS/FM WLAN 11b/g/n HT20 WLAN 11a/n HT20/HT40 Bluetooth BR/EDR/LE	
HW Version	DVT1B	
EUT Stage	Identical Prototype	

Remark: The above EUT's information was declared by manufacturer.

Accessory List		
AC Adapter 1	Brand Name :	Motorola
	Model Name :	SC-51
	Manufacturer :	Salom
AC Adapter 1	Brand Name :	Motorola
	Model Name :	SC-52
	Manufacturer :	Salom
AC Adapter 1	Brand Name :	Motorola
	Model Name :	SC-57
	Manufacturer :	Salom
AC Adapter 1	Brand Name :	Motorola
	Model Name :	SC-56
	Manufacturer :	Salom
AC Adapter 1	Brand Name :	Motorola
	Model Name :	SC-52
	Manufacturer :	Salom
AC Adapter 1	Brand Name :	Motorola
	Model Name :	SC-57
	Manufacturer :	Flex
AC Adapter 2	Brand Name :	Motorola
	Model Name :	SC-51
	Manufacturer :	Chenyang
AC Adapter 2	Brand Name :	Motorola
	Model Name :	SC-52
	Manufacturer :	Chenyang
AC Adapter 2	Brand Name :	Motorola
	Model Name :	SC-56
	Manufacturer :	Chenyang
AC Adapter 2	Brand Name :	Motorola
	Model Name :	SC-57
	Manufacturer :	Cliptech
Battery	Brand Name :	Motorola
	Model Name :	JG30
	Manufacturer :	Amperex
Earphone	Brand Name :	Motorola
	Model Name :	SH38C37773
	Manufacturer :	Lyand
USB Cable 1	Brand Name :	Luxshare
	Model Name :	SKN6473A
USB Cable 2	Brand Name :	Cabletech
	Model Name :	SKN6473A
USB Cable 3	Brand Name :	Saibao
	Model Name :	SKN6473A

1.2 Product Specification of Equipment Under Test

Standards-related Product Specification	
Tx Frequency	LTE Band 2: 1850.7 MHz ~ 1909.3 MHz LTE Band 4: 1710.7 MHz ~ 1754.3 MHz LTE Band 5: 824.7 MHz ~ 848.3 MHz LTE Band 7: 2502.5 MHz ~ 2567.5 MHz LTE Band 12: 699.7 MHz ~ 715.3 MHz LTE Band 17: 706.5 MHz ~ 713.5 MHz LTE Band 66: 1710.7 MHz ~ 1779.3 MHz
Rx Frequency	LTE Band 2: 1930.7 MHz ~ 1989.3 MHz LTE Band 4: 2110.7 MHz ~ 2154.3 MHz LTE Band 5: 869.7 MHz ~ 893.3 MHz LTE Band 7: 2622.5 MHz ~ 2687.5 MHz LTE Band 12: 729.7 MHz ~ 745.3 MHz LTE Band 17: 736.5 MHz ~ 743.5 MHz LTE Band 66: 2110.7 MHz ~ 2199.3 MHz
Bandwidth	LTE Band 2: 1.4MHz / 3MHz / 5MHz / 10MHz / 15MHz / 20MHz LTE Band 4: 1.4MHz / 3MHz / 5MHz / 10MHz / 15MHz / 20MHz LTE Band 5: 1.4MHz / 3MHz / 5MHz / 10MHz LTE Band 7: 5MHz / 10MHz / 15MHz / 20MHz LTE Band 12: 1.4MHz / 3MHz / 5MHz / 10MHz LTE Band 17: 5MHz / 10MHz LTE Band 66: 1.4MHz / 3MHz / 5MHz / 10MHz / 15MHz / 20MHz
Maximum Output Power to Antenna	LTE Band 2: 23.10 dBm LTE Band 4: 23.30 dBm LTE Band 5: 23.40 dBm LTE Band 7: 23.42 dBm LTE Band 12: 23.42 dBm LTE Band 17: 23.32 dBm LTE Band 66: 23.09 dBm
Antenna Type	Fixed Internal Antenna and Dipole Antenna
Antenna Gain	LTE Band 2: 2.0 dBi LTE Band 4: 2.0 dBi LTE Band 5: 0.0 dBi LTE Band 7: 3.0 dBi LTE Band 12: 0.0 dBi LTE Band 17: 0.0 dBi LTE Band 66: 2.0 dBi
Type of Modulation	QPSK / 16QAM

1.3 Modification of EUT

No modifications are made to the EUT during all test items.

1.4 Emission Designator

LTE Band 2		QPSK			16QAM		
BW (MHz)	Frequency Range (MHz)	Emission Designator (99%OBW)	Frequency Tolerance (ppm)	Maximum EIRP(W)	Emission Designator (99%OBW)	Frequency Tolerance (ppm)	Maximum EIRP(W)
1.4	1850.7 ~ 1909.3	-	-	0.3090	-	-	0.2780
3	1851.5 ~ 1908.5	-	-	0.3090	-	-	0.2864
5	1852.5 ~ 1907.5	-	-	0.3090	-	-	0.2871
10	1855.0 ~ 1905.0	-	-	0.3177	-	-	0.2786
15	1857.5 ~ 1902.5	-	-	0.3228	-	-	0.3126
20	1860.0 ~ 1900.0	-	-	0.3236	-	-	0.3013
LTE Band 4		QPSK			16QAM		
BW (MHz)	Frequency Range (MHz)	Emission Designator (99%OBW)	Frequency Tolerance (ppm)	Maximum EIRP(W)	Emission Designator (99%OBW)	Frequency Tolerance (ppm)	Maximum EIRP(W)
1.4	1710.7 ~ 1754.3	-	-	0.2992	-	-	0.2780
3	1711.5 ~ 1753.5	-	-	0.3027	-	-	0.2761
5	1712.5 ~ 1752.5	-	-	0.3020	-	-	0.2805
10	1715.0 ~ 1750.0	-	-	0.3155	-	-	0.2799
15	1717.5 ~ 1747.5	-	-	0.3388	-	-	0.2858
20	1720.0 ~ 1745.0	-	-	0.3170	-	-	0.2851
LTE Band 5		QPSK			16QAM		
BW (MHz)	Frequency Range (MHz)	Emission Designator (99%OBW)	Frequency Tolerance (ppm)	Maximum ERP(W)	Emission Designator (99%OBW)	Frequency Tolerance (ppm)	Maximum ERP(W)
1.4	824.7 ~ 848.3	-	-	0.1321	-	-	0.1119
3	825.5 ~ 847.5	-	-	0.1334	-	-	0.1114
5	826.5 ~ 846.5	-	-	0.1334	-	-	0.1138
10	829.0 ~ 844.0	-	-	0.1334	-	-	0.1132

LTE Band 7		QPSK			16QAM		
BW (MHz)	Frequency Range (MHz)	Emission Designator (99%OBW)	Frequency Tolerance (ppm)	Maximum EIRP(W)	Emission Designator (99%OBW)	Frequency Tolerance (ppm)	Maximum EIRP(W)
5	2502.5 ~ 2567.5	-	-	0.4266	-	-	0.3622
10	2505.0 ~ 2565.0	-	-	0.4295	-	-	0.3540
15	2507.5 ~ 2562.5	-	-	0.4295	-	-	0.3936
20	2510.0 ~ 2560.0	-	-	0.4385	-	-	0.3656
LTE Band 12		QPSK			16QAM		
BW (MHz)	Frequency Range (MHz)	Emission Designator (99%OBW)	Frequency Tolerance (ppm)	Maximum ERP(W)	Emission Designator (99%OBW)	Frequency Tolerance (ppm)	Maximum ERP(W)
1.4	699.7 ~ 715.3	-	-	0.1315	-	-	0.1156
3	700.5 ~ 714.5	-	-	0.1312	-	-	0.1143
5	701.5 ~ 713.5	-	-	0.1334	-	-	0.1143
10	704.0 ~ 711.0	-	-	0.1340	-	-	0.1122
LTE Band 17		QPSK			16QAM		
BW (MHz)	Frequency Range (MHz)	Emission Designator (99%OBW)	Frequency Tolerance (ppm)	Maximum ERP(W)	Emission Designator (99%OBW)	Frequency Tolerance (ppm)	Maximum ERP(W)
5	706.5 ~ 713.5	-	-	0.1285	-	-	0.1125
10	709.0 ~ 711.0	-	-	0.1309	-	-	0.1096
LTE Band 66		QPSK			16QAM		
BW (MHz)	Frequency Range (MHz)	Emission Designator (99%OBW)	Frequency Tolerance (ppm)	Maximum EIRP(W)	Emission Designator (99%OBW)	Frequency Tolerance (ppm)	Maximum EIRP(W)
1.4	1710.7 ~ 1779.3	-	-	0.3133	-	-	0.2985
3	1711.5 ~ 1778.5	-	-	0.3126	-	-	0.2992
5	1712.5 ~ 1777.5	-	-	0.2992	-	-	0.3027
10	1715.0 ~ 1775.0	-	-	0.3090	-	-	0.3027
15	1717.5 ~ 1772.5	-	-	0.3177	-	-	0.3055
20	1720.0 ~ 1770.0	-	-	0.3228	-	-	0.2951

1.5 Testing Location

Sporton Lab is accredited to ISO 17025 by Taiwan Accreditation Foundation (TAF code : 1190) and the FCC designation No. TW1190 under the FCC 2.948(e) by Mutual Recognition Agreement (MRA) in FCC Test.

Test Site	SPORTON INTERNATIONAL INC.	
Test Site Location	No.52, Huaya 1st Rd., Guishan Dist., Taoyuan City, Taiwan (R.O.C.) TEL: +886-3-327-3456 FAX: +886-3-328-4978	
Test Site No.	**Sporton Site No.**	
	TH05-HY	03CH07-HY

Note: The test site complies with ANSI C63.4 2014 requirement.

1.6 Applicable Standards

According to the specifications of the manufacturer, the EUT must comply with the requirements of the following standards:

- ANSI C63.26-2015
- ANSI / TIA-603-E
- 47 CFR Part 2, 22(H), 24(E), 27
- FCC KDB 971168 D01 Power Meas. License Digital Systems v03r01
- FCC KDB 412172 D01 Determining ERP and EIRP v01r01

Remark:

1. All test items were verified and recorded according to the standards and without any deviation during the test.
2. This EUT has also been tested and complied with the requirements of FCC Part 15, Subpart B, recorded in a separate test report.

2 Test Configuration of Equipment Under Test

2.1 Test Mode

Antenna port conducted and radiated test items listed below are performed according to KDB 971168 D01 Power Meas. License Digital Systems v03r01 with maximum output power.

For radiated measurement, pre-scanned in three orthogonal panels, X, Y, Z. The worst cases (X plane for Band 12, Z plan for Band 2, 4, 5, 7, 17, and 66) were recorded in this report.

Test Items	Band	Bandwidth (MHz)						Modulation			RB #			Test Channel		
		1.4	3	5	10	15	20	QPSK	16QAM	64QAM	1	Half	Full	L	M	H
Max. Output Power	2	v	v	v	v	v	v	v	v		v	v	v	v	v	v
	4	v	v	v	v	v	v	v	v		v	v	v	v	v	v
	5	v	v	v	v	-	-	v	v		v	v	v	v	v	v
	7	-	-	v	v	v	v	v	v		v	v	v	v	v	v
	12	v	v	v	v	-	-	v	v		v	v	v	v	v	v
	17	-	-	v	v	-	-	v	v		v	v	v	v	v	v
	66	v	v	v	v	v	v	v	v		v	v	v	v	v	v
E.R.P / E.I.R.P	2	v	v	v	v	v	v	v	v	v	v			v	v	v
	4	v	v	v	v	v	v	v	v	v	v			v	v	v
	5	v	v	v	v	-	-	v	v	v	v			v	v	v
	7	-	-	v	v	v	v	v	v	v	v			v	v	v
	12	v	v	v	v	-	-	v	v	v	v			v	v	v
	17	-	-	v	v	-	-	v	v	v	v			v	v	v
	66	v	v	v	v	v	v	v	v	v	v			v	v	v
Radiated Spurious Emission	2	Worst Case												v	v	v
	4	Worst Case												v	v	v
	5	Worst Case												v	v	v
	7	Worst Case												v	v	v
	12	Worst Case												v	v	v
	17	Worst Case												v	v	v
	66	Worst Case												v	v	v
Remark	1. The mark "**v** " means that this configuration is chosen for testing 2. The mark "-" means that this bandwidth is not supported. 3. The device is investigated from 30MHz to 10 times of fundamental signal for radiated spurious emission test under different RB size/offset and modulations in exploratory test. Subsequently, only the worst case emissions are reported. 4. All the radiated test cases were performed with Adapter 1 and USB Cable 1 Type C.															

2.2 Connection Diagram of Test System

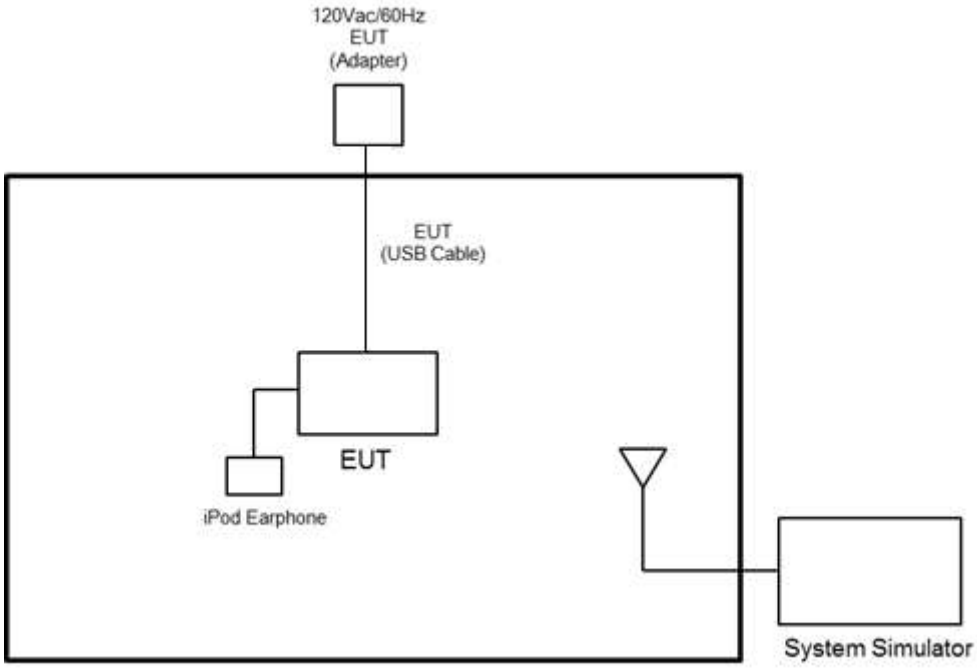

2.3 Support Unit used in test configuration and system

Item	Equipment	Trade Name	Model No.	FCC ID	Data Cable	Power Cord
1.	LTE Base Station	Anritsu	MT8820C	N/A	N/A	Unshielded, 1.8 m
2.	System Simulator	R&S	CMU 200	N/A	N/A	Unshielded, 1.8 m

2.4 Frequency List of Low/Middle/High Channels

LTE Band 2 Channel and Frequency List				
BW [MHz]	Channel/Frequency(MHz)	Lowest	Middle	Highest
20	Channel	18700	18900	19100
	Frequency	1860	1880	1900
15	Channel	18675	18900	19125
	Frequency	1857.5	1880	1902.5
10	Channel	18650	18900	19150
	Frequency	1855	1880	1905
5	Channel	18625	18900	19175
	Frequency	1852.5	1880	1907.5
3	Channel	18615	18900	19185
	Frequency	1851.5	1880	1908.5
1.4	Channel	18607	18900	19193
	Frequency	1850.7	1880	1909.3

LTE Band 4 Channel and Frequency List				
BW [MHz]	Channel/Frequency(MHz)	Lowest	Middle	Highest
20	Channel	20050	20175	20300
	Frequency	1720	1732.5	1745
15	Channel	20025	20175	20325
	Frequency	1717.5	1732.5	1747.5
10	Channel	20000	20175	20350
	Frequency	1715	1732.5	1750
5	Channel	19975	20175	20375
	Frequency	1712.5	1732.5	1752.5
3	Channel	19965	20175	20385
	Frequency	1711.5	1732.5	1753.5
1.4	Channel	19957	20175	20393
	Frequency	1710.7	1732.5	1754.3

LTE Band 5 Channel and Frequency List				
BW [MHz]	Channel/Frequency(MHz)	Lowest	Middle	Highest
10	Channel	20450	20525	20600
	Frequency	829	836.5	844
5	Channel	20425	20525	20625
	Frequency	826.5	836.5	846.5
3	Channel	20415	20525	20635
	Frequency	825.5	836.5	847.5
1.4	Channel	20407	20525	20643
	Frequency	824.7	836.5	848.3

LTE Band 7 Channel and Frequency List				
BW [MHz]	Channel/Frequency(MHz)	Lowest	Middle	Highest
20	Channel	20850	21100	21350
	Frequency	2510	2535	2560
15	Channel	20825	21100	21375
	Frequency	2507.5	2535	2562.5
10	Channel	20800	21100	21400
	Frequency	2505	2535	2565
5	Channel	20775	21100	21425
	Frequency	2502.5	2535	2567.5

LTE Band 12 Channel and Frequency List				
BW [MHz]	Channel/Frequency(MHz)	Lowest	Middle	Highest
10	Channel	23060	23095	23130
	Frequency	704	707.5	711
5	Channel	23035	23095	23155
	Frequency	701.5	707.5	713.5
3	Channel	23025	23095	23165
	Frequency	700.5	707.5	714.5
1.4	Channel	23017	23095	23173
	Frequency	699.7	707.5	715.3

LTE Band 17 Channel and Frequency List				
BW [MHz]	Channel/Frequency(MHz)	Lowest	Middle	Highest
10	Channel	23780	23790	23800
	Frequency	709	710	711
5	Channel	23755	23790	23825
	Frequency	706.5	710	713.5

LTE Band 66 Channel and Frequency List				
BW [MHz]	Channel/Frequency(MHz)	Lowest	Middle	Highest
20	Channel	132072	132322	132572
	Frequency	1720	1745	1770
15	Channel	132047	132322	132597
	Frequency	1717.5	1745	1772.5
10	Channel	132022	132322	132622
	Frequency	1715	1745	1775
5	Channel	131997	132322	132647
	Frequency	1712.5	1745	1777.5
3	Channel	131987	132322	132657
	Frequency	1711.5	1745	1778.5
1.4	Channel	131979	132322	132665
	Frequency	1710.7	1745	1779.3

3 Conducted Test Items

3.1 Measuring Instruments

See list of measuring instruments of this test report.

3.1.1 Test Setup

3.1.2 Conducted Output Power

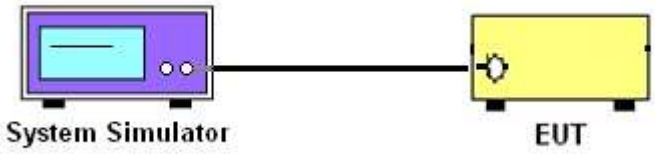

3.1.3 Test Result of Conducted Test

Please refer to Appendix A.

3.2 Conducted Output Power and ERP/EIRP

3.2.1 Description of the Conducted Output Power Measurement and ERP/EIRP Measurement

A system simulator was used to establish communication with the EUT. Its parameters were set to force the EUT transmitting at maximum output power. The measured power in the radio frequency on the transmitter output terminals shall be reported.

The ERP of mobile transmitters must not exceed 7 Watts for LTE Band 5.

The ERP of mobile transmitters must not exceed 3 Watts for LTE Band 12 and Band 17.

The EIRP of mobile transmitters must not exceed 2 Watts for LTE Band 2 and Band 7.

The EIRP of mobile transmitters must not exceed 1 Watts for LTE Band 4 and Band 66.

According to KDB 412172 D01 Power Approach,

EIRP = $P_T + G_T – L_C$, ERP = EIRP -2.15, where

P_T = transmitter output power in dBm

G_T = gain of the transmitting antenna in dBi

L_C = signal attenuation in the connecting cable between the transmitter and antenna in dB

3.2.2 Test Procedures

1. The transmitter output port was connected to the system simulator.
2. Set EUT at maximum power through the system simulator.
3. Select lowest, middle, and highest channels for each band and different modulation.
4. Measure and record the power level from the system simulator.

4 Radiated Test Items

4.1 Measuring Instruments

See list of measuring instruments of this test report.

4.1.1 Test Setup

For radiated test from 30MHz to 1GHz

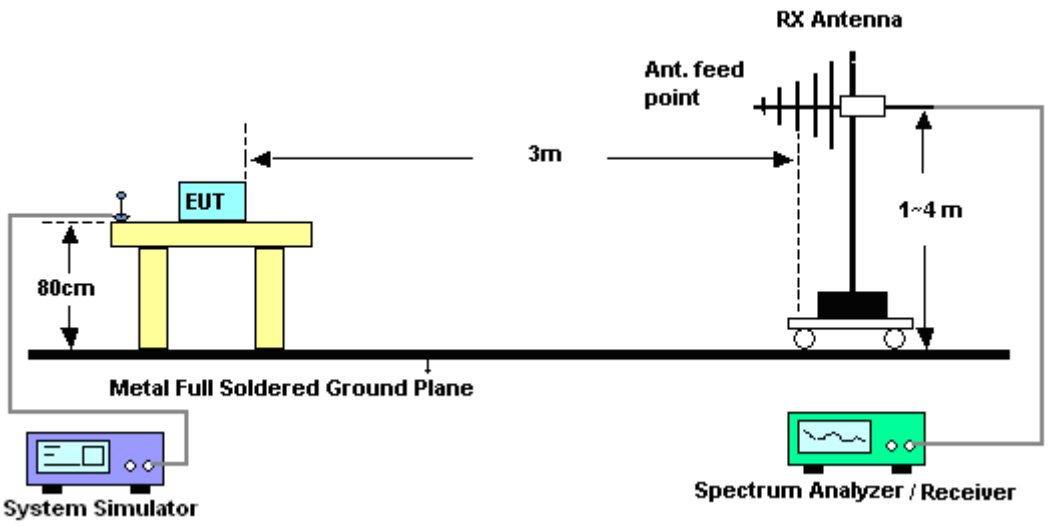

For radiated test above 1GHz

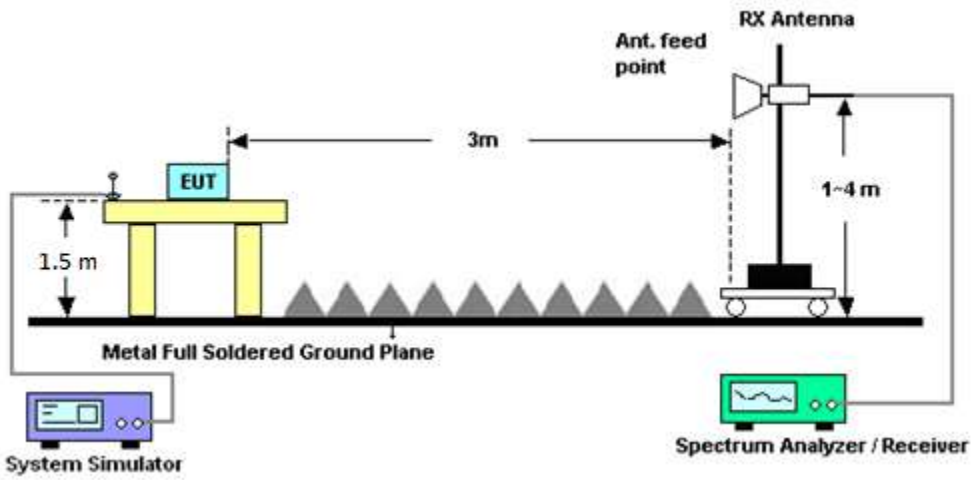

4.1.2 Test Result of Radiated Test

Please refer to Appendix B.

4.2 Radiated Spurious Emission

4.2.1 Description of Radiated Spurious Emission

The radiated spurious emission was measured by substitution method according to ANSI / TIA-603-E. The power of any emission outside of the authorized operating frequency ranges must be attenuated below the transmitter power (P) by a factor of at least 43 + 10 log (P) dB.

For Band 7

The power of any emission outside of the authorized operating frequency ranges must be attenuated below the transmitter power (P) by a factor of at least 55 + 10 log (P) dB.

The spectrum is scanned from 30 MHz up to a frequency including its 10th harmonic.

4.2.2 Test Procedures

The testing follows FCC KDB 971168 D01 v03r01 Section 5.8 and ANSI / TIA-603-E Section 2.2.12.

1. The EUT was placed on a turntable with 0.8 meter for frequency below 1GHz and 1.5 meter for frequency above 1GHz respectively above ground.
2. The EUT was set 3 meters from the receiving antenna, which was mounted on the antenna tower.
3. The table was rotated 360 degrees to determine the position of the highest spurious emission.
4. The height of the receiving antenna is varied between one meter and four meters to search the maximum spurious emission for both horizontal and vertical polarizations.
5. Make the measurement with the spectrum analyzer's RBW = 1MHz, VBW = 3MHz, taking the record of maximum spurious emission.
6. A horn antenna was substituted in place of the EUT and was driven by a signal generator.
7. Tune the output power of signal generator to the same emission level with EUT maximum spurious emission.
8. Taking the record of output power at antenna port.
9. Repeat step 7 to step 8 for another polarization.
10. The RF fundamental frequency should be excluded against the limit line in the operating frequency band.
    The limit line is derived from 43 + 10log(P)dB below the transmitter power P(Watts)
11. For Band 7:
    The limit line is derived from 55 + 10log(P)dB below the transmitter power P(Watts)
    EIRP (dBm) = S.G. Power – Tx Cable Loss + Tx Antenna Gain
    ERP (dBm) = EIRP - 2.15

5 List of Measuring Equipment

Instrument	Manufacturer	Model No.	Serial No.	Characteristics	Calibration Date	Test Date	Due Date	Remark
LTE Base Station	Anritsu	MT8820C	6201432821	GSM/GPRS/WCDMA/LTE	Oct. 13, 2017	Sep. 28, 2018	Oct. 12, 2018	Conducted (TH05-HY)
Programmable Power Supply	GW Instek	PSS-2005	EL890089	1V~20V 0.5A~5A	Jan. 12, 2018	Sep. 28, 2018	Jan. 11, 2019	Conducted (TH05-HY)
Coupler	Warison	1-18GHz 20 dB 25WSMA Directional Coupler	#B	1G~18GHz	Dec. 04, 2017	Sep. 28, 2018	Dec. 03, 2018	Conducted (TH05-HY)
Bilog Antenna	TESEQ	CBL 6111D&00800N1D01N-06	35419&03	30MHz to 1GHz	Dec. 18, 2017	Sep. 28, 2018~ Sep. 29, 2018	Dec. 17, 2018	Radiation (03CH07-HY)
Double Ridge Horn Antenna	ESCO	3117	00211469	1GHz ~ 18GHz	Aug. 06, 2018	Sep. 28, 2018~ Sep. 29, 2018	Aug. 05, 2019	Radiation (03CH07-HY)
Double Ridge Horn Antenna	ESCO	3117	00066583	1GHz ~ 18GHz	Aug. 06, 2018	Sep. 28, 2018~ Sep. 29, 2018	Aug. 05, 2019	Radiation (03CH07-HY)
Preamplifier	MITEQ	AMF-7D-00101800-30-10P	1590075	1GHz ~ 18GHz	Apr. 25, 2018	Sep. 28, 2018~ Sep. 29, 2018	Apr. 24, 2019	Radiation (03CH07-HY)
Spectrum Analyzer	Agilent	N9010A	MY53470118	10Hz~44GHz	Apr. 17, 2018	Sep. 28, 2018~ Sep. 29, 2018	Apr. 16, 2019	Radiation (03CH07-HY)
RF Cable	HUBER + SUHNER	SUCOFLEX 104	MY28655/4, MY24971/4, MY15682/4	30MHz~1GHz	Feb. 27, 2018	Sep. 28, 2018~ Sep. 29, 2018	Feb. 26, 2019	Radiation (03CH07-HY)
RF Cable	HUBER + SUHNER	SUCOFLEX 104	MY28655/4, MY24971/4, MY15682/4	1GHz~18GHz	Feb. 27, 2018	Sep. 28, 2018~ Sep. 29, 2018	Feb. 26, 2019	Radiation (03CH07-HY)
RF Cable	HUBER + SUHNER	SUCOFLEX 102	MY2858/2	18GHz~40GHz	Feb. 27, 2018	Sep. 28, 2018~ Sep. 29, 2018	Feb. 26, 2019	Radiation (03CH07-HY)
Controller	ChainTek	Chaintek 3000	N/A	Control Turn table	N/A	Sep. 28, 2018~ Sep. 29, 2018	N/A	Radiation (03CH07-HY)
Controller	Max-Full	MF7802	MF780208368	Control Ant Mast	N/A	Sep. 28, 2018~ Sep. 29, 2018	N/A	Radiation (03CH07-HY)
Antenna Mast	Max-Full	MFA520BS	N/A	1m~4m	N/A	Sep. 28, 2018~ Sep. 29, 2018	N/A	Radiation (03CH07-HY)
Turn Table	ChainTek	Chaintek 3000	N/A	0~360 Degree	N/A	Sep. 28, 2018~ Sep. 29, 2018	N/A	Radiation (03CH07-HY)
Amplifier	MITEQ	TTA1840-35-HG	1871923	18GHz~40GHz, VSWR : 2.5:1 max	Jul. 16, 2018	Sep. 28, 2018~ Sep. 29, 2018	Jul. 15, 2019	Radiation (03CH07-HY)

Instrument	Manufacturer	Model No.	Serial No.	Characteristics	Calibration Date	Test Date	Due Date	Remark
SHF-EHF Horn Antenna	SCHWARZBECK	BBHA 9170	BBHA9170251	18GHz- 40GHz	Nov. 10, 2017	Sep. 28, 2018~ Sep. 29, 2018	Nov. 09, 2018	Radiation (03CH07-HY)
EMI Test Receiver	Agilent	N9038A(MXE)	MY53290053	20Hz to 26.5GHz	Jan. 16, 2018	Sep. 28, 2018~ Sep. 29, 2018	Jan. 15, 2019	Radiation (03CH07-HY)
Signal Generator	Rohde & Schwarz	SMF100A	101107	100kHz~40GHz	May 22, 2018	Sep. 28, 2018~ Sep. 29, 2018	May 21, 2019	Radiation (03CH07-HY)
Software	Audix	E3 6.2009-8-24	80504004656H	N/A	N/A	Sep. 28, 2018~ Sep. 29, 2018	N/A	Radiation (03CH07-HY)
Filter	Microwave	H1G013G1	SN477215	1.0G High Pass	Dec. 07, 2017	Sep. 28, 2018~ Sep. 29, 2018	Dec. 06, 2018	Radiation (03CH07-HY)
Filter	Microwave	H3G018G1	SN477220	3.0G High Pass	Nov. 21, 2017	Sep. 28, 2018~ Sep. 29, 2018	Nov. 20, 2018	Radiation (03CH07-HY)
Notch Filter	Wainwright	WRCT2500/2700-10/20-10SSK	SN3	WCDMA Band 8	Nov. 03, 2017	Sep. 28, 2018~ Sep. 29, 2018	Nov. 02, 2018	Radiation (03CH07-HY)
Notch Filter	Wainwright	WRCT1747.5-0.4/40-8SS	SN2	DCS 1800	Mar. 08, 2018	Sep. 28, 2018~ Sep. 29, 2018	Mar. 07, 2019	Radiation (03CH07-HY)
Notch Filter	Wainwright	WTRCD10-1710-1785-20-40-40SSK	SN1	1710-1785	May 22, 2018	Sep. 28, 2018~ Sep. 29, 2018	May 21, 2018	Radiation (03CH07-HY)
Notch Filter	Wainwright	WRCG1710-1785-1690-1805-60-12SS	SN6	AWS Band	Nov. 03, 2017	Sep. 28, 2018~ Sep. 29, 2018	Nov. 02, 2018	Radiation (03CH07-HY)

6 Uncertainty of Evaluation

Uncertainty of Radiated Emission Measurement (30 MHz ~ 1000 MHz)

Measuring Uncertainty for a Level of Confidence of 95% (U = 2Uc(y))	5.70

Uncertainty of Radiated Emission Measurement (1 GHz ~ 18 GHz)

Measuring Uncertainty for a Level of Confidence of 95% (U = 2Uc(y))	5.50

Uncertainty of Radiated Emission Measurement (18 GHz ~ 40 GHz)

Measuring Uncertainty for a Level of Confidence of 95% (U = 2Uc(y))	5.20

Appendix A. Test Results of Conducted Test

Conducted Output Power(Average power)

LTE Band 2 Maximum Average Power [dBm]						
BW [MHz]	RB Size	RB Offset	Mod	Lowest	Middle	Highest
20	1	0	QPSK	22.86	**23.10**	22.95
20	1	49		22.81	22.79	22.68
20	1	99		22.86	22.85	22.76
20	50	0		22.26	22.27	22.25
20	50	24		22.25	22.24	22.19
20	50	50		22.16	22.18	22.22
20	100	0		22.33	22.25	22.18
20	1	0	16-QAM	22.67	22.79	22.73
20	1	49		22.41	22.42	22.31
20	1	99		22.60	22.60	22.50
20	50	0		21.23	21.20	21.28
20	50	24		21.25	21.18	21.20
20	50	50		21.18	21.17	21.29
20	100	0		21.33	21.30	21.36
15	1	0	QPSK	22.92	23.09	23.02
15	1	37		22.63	22.54	22.56
15	1	74		22.91	22.93	22.90
15	36	0		22.59	22.61	22.59
15	36	20		22.31	22.35	22.26
15	36	39		22.35	22.32	22.29
15	75	0		22.41	22.46	22.39
15	1	0	16-QAM	22.95	22.80	22.56
15	1	37		22.26	22.24	22.17
15	1	74		22.72	22.79	22.65
15	36	0		21.58	21.64	21.57
15	36	20		21.30	21.34	21.30
15	36	39		21.28	21.31	21.25
15	75	0		21.42	21.45	21.47

LTE Band 2 Maximum Average Power [dBm]						
BW [MHz]	RB Size	RB Offset	Mod	Lowest	Middle	Highest
10	1	0	QPSK	23.02	23.00	22.95
10	1	25		22.67	22.62	22.48
10	1	49		22.31	22.31	22.18
10	25	0		22.24	22.23	22.09
10	25	12		22.20	22.22	22.09
10	25	25		22.07	22.10	21.97
10	50	0		22.08	22.12	22.00
10	1	0	16-QAM	22.37	22.34	22.28
10	1	25		22.32	22.45	22.31
10	1	49		22.03	22.03	21.86
10	25	0		21.17	21.20	21.02
10	25	12		21.17	21.19	21.05
10	25	25		21.01	21.10	20.91
10	50	0		21.13	21.19	21.01
5	1	0	QPSK	22.89	22.90	22.89
5	1	12		22.59	22.60	22.47
5	1	24		22.65	22.68	22.52
5	12	0		22.28	22.27	22.12
5	12	7		22.18	22.27	22.04
5	12	13		22.16	22.18	22.01
5	25	0		22.25	22.27	22.13
5	1	0	16-QAM	22.57	22.58	22.36
5	1	12		22.30	22.37	22.15
5	1	24		22.38	22.42	22.19
5	12	0		21.27	21.35	21.14
5	12	7		21.26	21.27	21.13
5	12	13		21.22	21.23	21.10
5	25	0		21.13	21.19	21.06

LTE Band 2 Maximum Average Power [dBm]						
BW [MHz]	RB Size	RB Offset	Mod	Lowest	Middle	Highest
3	1	0	QPSK	22.63	22.63	22.90
3	1	8		22.60	22.61	22.47
3	1	14		22.49	22.53	22.40
3	8	0		22.50	22.26	22.07
3	8	4		22.20	22.23	22.05
3	8	7		22.14	22.15	22.02
3	15	0		22.20	22.22	22.05
3	1	0	16-QAM	22.45	22.51	22.26
3	1	8		22.43	22.57	22.20
3	1	14		22.35	22.46	22.16
3	8	0		21.26	21.25	21.16
3	8	4		21.25	21.23	21.15
3	8	7		21.15	21.16	21.13
3	15	0		21.23	21.22	21.07
1.4	1	0	QPSK	22.55	22.90	22.75
1.4	1	3		22.64	22.57	22.43
1.4	1	5		22.54	22.55	22.35
1.4	3	0		22.62	22.61	22.40
1.4	3	1		22.65	22.65	22.46
1.4	3	3		22.61	22.63	22.40
1.4	6	0		22.13	22.16	21.98
1.4	1	0	16-QAM	22.35	22.35	22.17
1.4	1	3		22.44	22.41	22.22
1.4	1	5		22.33	22.34	22.16
1.4	3	0		22.18	22.21	22.02
1.4	3	1		22.25	22.27	22.08
1.4	3	3		22.14	22.22	22.02
1.4	6	0		21.19	21.25	21.06

LTE Band 4 Maximum Average Power [dBm]						
BW [MHz]	RB Size	RB Offset	Mod	Lowest	Middle	Highest
20	1	0	QPSK	22.80	22.92	22.45
20	1	49		23.01	22.95	22.83
20	1	99		22.56	22.92	22.76
20	50	0		22.59	22.10	22.06
20	50	24		22.27	22.11	22.14
20	50	50		22.48	22.17	22.13
20	100	0		22.35	22.13	22.17
20	1	0	16-QAM	22.37	22.15	22.52
20	1	49		22.48	22.42	22.40
20	1	99		22.30	22.10	22.55
20	50	0		21.06	20.91	21.05
20	50	24		21.26	21.08	21.12
20	50	50		21.47	21.18	21.09
20	100	0		21.34	21.09	21.13
15	1	0	QPSK	22.87	22.70	23.00
15	1	37		22.64	22.49	22.53
15	1	74		**23.30**	23.05	22.82
15	36	0		22.45	22.32	22.53
15	36	20		22.36	22.22	22.24
15	36	39		22.44	22.24	22.12
15	75	0		22.47	22.32	22.33
15	1	0	16-QAM	22.19	22.10	22.56
15	1	37		22.44	22.22	22.27
15	1	74		22.10	22.15	22.16
15	36	0		21.43	21.36	21.55
15	36	20		21.30	21.20	21.22
15	36	39		21.42	21.26	21.15
15	75	0		21.45	21.33	21.34

LTE Band 4 Maximum Average Power [dBm]						
BW [MHz]	RB Size	RB Offset	Mod	Lowest	Middle	Highest
10	1	0	QPSK	22.99	22.84	22.59
10	1	25		22.47	22.62	22.53
10	1	49		22.36	22.36	22.65
10	25	0		21.99	21.98	22.14
10	25	12		22.03	22.15	22.11
10	25	25		22.02	22.07	21.94
10	50	0		22.00	22.01	22.04
10	1	0	16-QAM	22.17	22.22	22.47
10	1	25		22.27	22.42	22.39
10	1	49		22.20	22.18	21.96
10	25	0		20.95	20.96	21.13
10	25	12		21.02	21.07	21.08
10	25	25		20.99	20.98	20.93
10	50	0		21.01	21.00	21.04
5	1	0	QPSK	22.60	22.80	22.32
5	1	12		22.37	22.52	22.52
5	1	24		22.53	22.64	22.53
5	12	0		21.99	22.12	22.14
5	12	7		21.98	22.11	22.08
5	12	13		22.00	22.10	22.03
5	25	0		22.03	22.16	22.10
5	1	0	16-QAM	22.37	22.39	22.48
5	1	12		22.08	22.24	22.20
5	1	24		22.33	22.43	22.27
5	12	0		21.07	21.20	21.20
5	12	7		21.08	21.23	21.17
5	12	13		21.01	21.21	21.13
5	25	0		20.96	21.11	21.07

LTE Band 4 Maximum Average Power [dBm]						
BW [MHz]	RB Size	RB Offset	Mod	Lowest	Middle	Highest
3	1	0	QPSK	22.81	22.59	22.60
3	1	8		22.47	22.69	22.67
3	1	14		22.50	22.61	22.57
3	8	0		22.00	22.15	22.14
3	8	4		22.05	22.18	22.14
3	8	7		22.03	22.17	22.07
3	15	0		22.04	22.18	22.15
3	1	0	16-QAM	22.36	22.37	22.41
3	1	8		22.29	22.39	22.41
3	1	14		22.30	22.37	22.31
3	8	0		21.16	21.30	21.29
3	8	4		21.14	21.27	21.27
3	8	7		21.11	21.33	21.22
3	15	0		21.01	21.18	21.17
1.4	1	0	QPSK	22.39	22.60	22.76
1.4	1	3		22.39	22.73	22.59
1.4	1	5		22.39	22.68	22.43
1.4	3	0		22.49	22.63	22.59
1.4	3	1		22.56	22.71	22.65
1.4	3	3		22.46	22.66	22.57
1.4	6	0		21.96	22.17	22.09
1.4	1	0	16-QAM	22.20	22.27	22.38
1.4	1	3		22.28	22.35	22.44
1.4	1	5		22.30	22.27	22.35
1.4	3	0		22.03	22.25	22.20
1.4	3	1		22.09	22.31	22.23
1.4	3	3		22.07	22.24	22.16
1.4	6	0		21.02	21.13	21.08

LTE Band 5 Maximum Average Power [dBm]						
BW [MHz]	RB Size	RB Offset	Mod	Lowest	Middle	Highest
10	1	0	QPSK	22.83	23.05	23.10
10	1	25		23.38	**23.40**	23.34
10	1	49		23.00	22.83	22.77
10	25	0		22.32	22.31	22.19
10	25	12		22.42	22.43	22.34
10	25	25		22.36	22.32	22.16
10	50	0		22.37	22.33	22.19
10	1	0	16-QAM	22.33	22.35	22.30
10	1	25		22.68	22.69	22.55
10	1	49		22.29	22.11	22.05
10	25	0		21.31	21.27	21.21
10	25	12		21.41	21.45	21.30
10	25	25		21.33	21.28	21.09
10	50	0		21.33	21.29	21.19
5	1	0	QPSK	22.83	22.74	22.70
5	1	12		23.34	23.30	23.17
5	1	24		**23.40**	23.38	23.21
5	12	0		22.48	22.47	22.31
5	12	7		22.49	22.43	22.24
5	12	13		22.42	22.44	22.21
5	25	0		22.44	22.48	22.30
5	1	0	16-QAM	22.71	22.63	22.54
5	1	12		22.38	22.47	22.32
5	1	24		22.67	22.67	22.43
5	12	0		21.50	21.52	21.34
5	12	7		21.49	21.54	21.33
5	12	13		21.52	21.48	21.30
5	25	0		21.42	21.39	21.26

LTE Band 5 Maximum Average Power [dBm]						
BW [MHz]	RB Size	RB Offset	Mod	Lowest	Middle	Highest
3	1	0	QPSK	22.78	22.72	22.90
3	1	8		23.38	**23.40**	23.19
3	1	14		23.36	23.29	23.12
3	8	0		22.43	22.39	22.25
3	8	4		22.43	22.43	22.27
3	8	7		22.40	22.43	22.21
3	15	0		22.42	22.45	22.24
3	1	0	16-QAM	22.59	22.61	22.46
3	1	8		22.57	22.62	22.45
3	1	14		22.58	22.57	22.41
3	8	0		21.56	21.54	21.33
3	8	4		21.55	21.53	21.33
3	8	7		21.54	21.52	21.33
3	15	0		21.45	21.40	21.27
1.4	1	0	QPSK	22.95	23.20	22.83
1.4	1	3		23.31	23.28	23.14
1.4	1	5		23.27	23.24	23.09
1.4	3	0		23.31	23.30	23.10
1.4	3	1		23.36	23.33	23.14
1.4	3	3		23.33	23.28	23.08
1.4	6	0		22.39	22.38	22.18
1.4	1	0	16-QAM	22.58	22.48	22.40
1.4	1	3		22.63	22.64	22.45
1.4	1	5		22.53	22.57	22.36
1.4	3	0		22.41	22.43	22.18
1.4	3	1		22.49	22.48	22.22
1.4	3	3		22.41	22.42	22.17
1.4	6	0		21.39	21.36	21.17

LTE Band 7 Maximum Average Power [dBm]						
BW [MHz]	RB Size	RB Offset	Mod	Lowest	Middle	Highest
20	1	0	QPSK	23.09	23.15	23.10
20	1	49		23.16	23.05	23.22
20	1	99		23.32	23.31	**23.42**
20	50	0		22.23	22.15	22.26
20	50	24		22.17	22.12	22.26
20	50	50		22.20	22.18	22.32
20	100	0		22.25	22.25	22.35
20	1	0	16-QAM	22.45	22.50	22.63
20	1	49		22.42	22.26	22.38
20	1	99		22.54	22.53	22.63
20	50	0		21.17	21.14	21.26
20	50	24		21.17	21.13	21.26
20	50	50		21.19	21.28	21.32
20	100	0		21.28	21.21	21.27
15	1	0	QPSK	22.95	22.95	22.83
15	1	37		23.03	22.99	23.12
15	1	74		23.30	23.33	23.15
15	36	0		22.43	22.38	22.46
15	36	20		22.29	22.22	22.30
15	36	39		22.25	22.19	22.31
15	75	0		22.33	22.28	22.40
15	1	0	16-QAM	22.77	22.73	22.95
15	1	37		22.29	22.18	22.34
15	1	74		22.58	22.63	22.74
15	36	0		21.38	21.37	21.47
15	36	20		21.23	21.19	21.33
15	36	39		21.28	21.16	21.29
15	75	0		21.30	21.30	21.41

LTE Band 7 Maximum Average Power [dBm]						
BW [MHz]	RB Size	RB Offset	Mod	Lowest	Middle	Highest
10	1	0	QPSK	22.88	23.05	23.07
10	1	25		23.19	23.26	23.33
10	1	49		22.78	22.78	22.87
10	25	0		22.11	22.13	22.28
10	25	12		22.22	22.17	22.32
10	25	25		22.05	22.08	22.21
10	50	0		22.11	22.06	22.21
10	1	0	16-QAM	22.12	22.14	22.37
10	1	25		22.31	22.36	22.49
10	1	49		22.10	22.07	22.18
10	25	0		21.15	21.09	21.21
10	25	12		21.17	21.14	21.29
10	25	25		21.09	21.04	21.16
10	50	0		21.07	21.09	21.22
5	1	0	QPSK	23.19	23.05	23.23
5	1	12		23.10	23.14	23.26
5	1	24		23.13	23.16	23.30
5	12	0		22.21	22.16	22.33
5	12	7		22.16	22.18	22.33
5	12	13		22.17	22.19	22.34
5	25	0		22.23	22.19	22.33
5	1	0	16-QAM	22.42	22.42	22.59
5	1	12		22.28	22.39	22.44
5	1	24		22.39	22.41	22.58
5	12	0		21.25	21.22	21.36
5	12	7		21.20	21.23	21.37
5	12	13		21.15	21.22	21.36
5	25	0		21.20	21.15	21.29

LTE Band 12 Maximum Average Power [dBm]						
BW [MHz]	RB Size	RB Offset	Mod	Lowest	Middle	Highest
10	1	0	QPSK	23.25	23.33	23.08
10	1	25		23.35	23.34	**23.42**
10	1	49		22.99	23.02	22.99
10	25	0		22.19	22.20	22.18
10	25	12		22.27	22.29	22.32
10	25	25		22.12	22.15	22.25
10	50	0		22.18	22.15	22.19
10	1	0	16-QAM	22.30	22.20	22.16
10	1	25		22.57	22.58	22.65
10	1	49		22.32	22.23	22.21
10	25	0		21.15	21.08	21.16
10	25	12		21.22	21.29	21.28
10	25	25		21.10	21.15	21.15
10	50	0		21.17	21.12	21.16
5	1	0	QPSK	22.89	23.40	22.95
5	1	12		23.23	23.25	23.35
5	1	24		23.31	23.33	23.34
5	12	0		22.37	22.26	22.36
5	12	7		22.29	22.28	22.33
5	12	13		22.29	22.35	22.32
5	25	0		22.36	22.32	22.39
5	1	0	16-QAM	22.70	22.66	22.73
5	1	12		22.45	22.38	22.46
5	1	24		22.66	22.65	22.69
5	12	0		21.45	21.33	21.41
5	12	7		21.38	21.39	21.42
5	12	13		21.35	21.45	21.43
5	25	0		21.20	21.28	21.33

LTE Band 12 Maximum Average Power [dBm]						
BW [MHz]	RB Size	RB Offset	Mod	Lowest	Middle	Highest
3	1	0	QPSK	23.12	23.26	23.01
3	1	8		23.33	23.32	23.31
3	1	14		23.26	23.26	23.24
3	8	0		22.37	22.24	22.29
3	8	4		22.35	22.31	22.35
3	8	7		22.31	22.31	22.33
3	15	0		22.36	22.29	22.31
3	1	0	16-QAM	22.64	22.58	22.70
3	1	8		22.73	22.68	22.69
3	1	14		22.69	22.57	22.71
3	8	0		21.50	21.37	21.44
3	8	4		21.49	21.44	21.42
3	8	7		21.47	21.47	21.44
3	15	0		21.38	21.30	21.35
1.4	1	0	QPSK	23.20	23.19	23.17
1.4	1	3		23.30	23.24	23.29
1.4	1	5		23.21	23.22	23.23
1.4	3	0		23.27	23.21	23.21
1.4	3	1		23.34	23.27	23.22
1.4	3	3		23.31	23.25	23.23
1.4	6	0		22.30	22.22	22.28
1.4	1	0	16-QAM	22.61	22.55	22.73
1.4	1	3		22.67	22.63	22.78
1.4	1	5		22.62	22.57	22.66
1.4	3	0		22.40	22.34	22.36
1.4	3	1		22.50	22.40	22.40
1.4	3	3		22.40	22.38	22.32
1.4	6	0		21.30	21.25	21.26

LTE Band 17 Maximum Average Power [dBm]						
BW [MHz]	RB Size	RB Offset	Mod	Lowest	Middle	Highest
10	1	0	QPSK	**23.32**	23.29	23.20
10	1	25		23.18	23.22	23.26
10	1	49		22.85	22.80	22.81
10	25	0		22.13	22.12	22.15
10	25	12		22.14	22.22	22.26
10	25	25		22.17	22.08	22.10
10	50	0		22.06	22.06	22.11
10	1	0	16-QAM	22.21	22.13	22.14
10	1	25		22.51	22.52	22.55
10	1	49		22.06	22.09	22.09
10	25	0		21.04	21.04	21.10
10	25	12		21.16	21.17	21.17
10	25	25		21.11	20.99	21.02
10	50	0		21.06	21.06	21.08
5	1	0	QPSK	22.66	22.96	22.86
5	1	12		23.19	23.19	23.17
5	1	24		23.22	23.24	23.20
5	12	0		22.23	22.24	22.20
5	12	7		22.25	22.25	22.20
5	12	13		22.22	22.17	22.16
5	25	0		22.23	22.25	22.22
5	1	0	16-QAM	22.66	22.59	22.59
5	1	12		22.32	22.39	22.25
5	1	24		22.56	22.60	22.57
5	12	0		21.32	21.34	21.29
5	12	7		21.32	21.30	21.29
5	12	13		21.32	21.27	21.27
5	25	0		21.22	21.18	21.20

LTE Band 66 Maximum Average Power [dBm]						
BW [MHz]	RB Size	RB Offset	Mod	Lowest	Middle	Highest
20	1	0	QPSK	22.73	23.05	**23.09**
20	1	49		22.55	23.00	23.04
20	1	99		22.65	22.64	22.74
20	50	0		22.17	22.29	22.37
20	50	24		22.20	22.05	22.15
20	50	50		22.10	22.15	22.21
20	100	0		22.26	22.20	22.28
20	1	0	16-QAM	22.40	22.60	22.36
20	1	49		22.56	22.60	22.66
20	1	99		22.36	22.70	22.50
20	50	0		21.21	21.28	21.72
20	50	24		21.44	21.34	21.43
20	50	50		21.53	21.39	21.24
20	100	0		21.47	21.37	21.44
15	1	0	QPSK	22.95	22.95	22.86
15	1	37		22.94	22.80	22.57
15	1	74		23.02	22.90	22.83
15	36	0		22.59	22.71	22.83
15	36	20		22.39	22.48	22.42
15	36	39		22.50	22.38	22.25
15	75	0		22.50	22.57	22.55
15	1	0	16-QAM	22.36	22.43	22.59
15	1	37		22.85	22.43	22.76
15	1	74		22.45	22.50	22.65
15	36	0		21.44	21.71	21.87
15	36	20		21.29	21.48	21.39
15	36	39		21.47	21.40	21.21
15	75	0		21.47	21.61	21.60

LTE Band 66 Maximum Average Power [dBm]						
BW [MHz]	RB Size	RB Offset	Mod	Lowest	Middle	Highest
10	1	0	QPSK	22.53	22.51	22.90
10	1	25		22.57	22.87	22.70
10	1	49		22.59	22.64	22.17
10	25	0		22.21	22.48	22.48
10	25	12		22.27	22.49	22.35
10	25	25		22.18	22.34	22.10
10	50	0		22.15	22.39	22.26
10	1	0	16-QAM	22.34	22.75	22.81
10	1	25		22.47	22.75	22.81
10	1	49		22.36	22.52	22.16
10	25	0		21.23	21.38	21.47
10	25	12		21.32	21.43	21.32
10	25	25		21.24	21.23	21.10
10	50	0		21.20	21.36	21.26
5	1	0	QPSK	22.76	22.50	22.59
5	1	12		22.51	22.39	22.41
5	1	24		22.70	22.15	22.02
5	12	0		22.15	22.30	22.30
5	12	7		22.15	22.47	22.22
5	12	13		22.16	22.46	22.17
5	25	0		22.21	22.49	22.28
5	1	0	16-QAM	22.58	22.49	22.68
5	1	12		22.35	22.81	22.59
5	1	24		22.59	22.73	22.48
5	12	0		21.22	21.51	21.31
5	12	7		21.20	21.50	21.26
5	12	13		21.23	21.47	21.23
5	25	0		21.13	21.54	21.35

LTE Band 66 Maximum Average Power [dBm]						
BW [MHz]	RB Size	RB Offset	Mod	Lowest	Middle	Highest
3	1	0	QPSK	22.63	22.55	22.67
3	1	8		22.65	22.95	22.57
3	1	14		22.61	22.87	22.51
3	8	0		22.18	22.47	22.19
3	8	4		22.19	22.51	22.20
3	8	7		22.19	22.45	22.16
3	15	0		22.12	22.45	22.18
3	1	0	16-QAM	22.43	22.76	22.51
3	1	8		22.40	22.70	22.52
3	1	14		22.38	22.61	22.41
3	8	0		21.25	21.61	21.22
3	8	4		21.24	21.56	21.21
3	8	7		21.24	21.55	21.14
3	15	0		21.11	21.43	21.18
1.4	1	0	QPSK	22.60	22.35	22.63
1.4	1	3		22.70	22.89	22.68
1.4	1	5		22.56	22.81	22.56
1.4	3	0		22.62	22.91	22.65
1.4	3	1		22.69	22.96	22.71
1.4	3	3		22.65	22.92	22.64
1.4	6	0		22.09	22.41	22.12
1.4	1	0	16-QAM	22.45	22.67	22.47
1.4	1	3		22.44	22.75	22.49
1.4	1	5		22.40	22.67	22.35
1.4	3	0		22.13	22.53	22.19
1.4	3	1		22.23	22.63	22.23
1.4	3	3		22.10	22.50	22.15
1.4	6	0		21.14	21.45	21.20

Appendix B. Test Results of ERP/EIRP and Radiated Test

ERP/EIRP

LTE Band 2 / 1.4MHz (Average) (GT - LC = 2 dB)							
Channel	Mode	RB		Conducted		EIRP	
		Size	Offset	Power (dBm)	Power (Watts)	EIRP(dBm)	EIRP(W)
Lowest	QPSK	1	0	22.55	0.1799	24.55	0.2851
Middle		1	0	22.90	0.1950	24.90	0.3090
Highest		1	0	22.75	0.1884	24.75	0.2985
Lowest	16QAM	1	3	22.44	0.1754	24.44	0.2780
Middle		1	3	22.41	0.1742	24.41	0.2761
Highest		1	3	22.22	0.1667	24.22	0.2642
Limit	EIRP < 2W			Result		PASS	

LTE Band 2 / 3MHz (Average) (GT - LC = 2 dB)							
Channel	Mode	RB		Conducted		EIRP	
		Size	Offset	Power (dBm)	Power (Watts)	EIRP(dBm)	EIRP(W)
Lowest	QPSK	1	0	22.63	0.1832	24.63	0.2904
Middle		1	0	22.63	0.1832	24.63	0.2904
Highest		1	0	22.90	0.1950	24.90	0.3090
Lowest	16QAM	1	8	22.43	0.1750	24.43	0.2773
Middle		1	8	22.57	0.1807	24.57	0.2864
Highest		1	8	22.20	0.1660	24.20	0.2630
Limit	EIRP < 2W			Result		PASS	

LTE Band 2 / 5MHz (Average) (GT - LC = 2 dB)							
Channel	Mode	RB		Conducted		EIRP	
		Size	Offset	Power (dBm)	Power (Watts)	EIRP(dBm)	EIRP(W)
Lowest	QPSK	1	0	22.89	0.1945	24.89	0.3083
Middle		1	0	22.90	0.1950	24.90	0.3090
Highest		1	0	22.89	0.1945	24.89	0.3083
Lowest	16QAM	1	0	22.57	0.1807	24.57	0.2864
Middle		1	0	22.58	0.1811	24.58	0.2871
Highest		1	0	22.36	0.1722	24.36	0.2729
Limit	EIRP < 2W			Result		PASS	

LTE Band 2 / 10MHz (Average) (GT - LC = 2 dB)							
Channel	Mode	RB		Conducted		EIRP	
		Size	Offset	Power (dBm)	Power (Watts)	EIRP(dBm)	EIRP(W)
Lowest	QPSK	1	0	23.02	0.2004	25.02	0.3177
Middle		1	0	23.00	0.1995	25.00	0.3162
Highest		1	0	22.95	0.1972	24.95	0.3126
Lowest	16QAM	1	25	22.32	0.1706	24.32	0.2704
Middle		1	25	22.45	0.1758	24.45	0.2786
Highest		1	25	22.31	0.1702	24.31	0.2698
Limit	EIRP < 2W			Result		PASS	

LTE Band 2 / 15MHz (Average) (GT - LC = 2 dB)							
Channel	Mode	RB		Conducted		EIRP	
		Size	Offset	Power (dBm)	Power (Watts)	EIRP(dBm)	EIRP(W)
Lowest	QPSK	1	0	22.92	0.1959	24.92	0.3105
Middle		1	0	23.09	0.2037	25.09	0.3228
Highest		1	0	23.02	0.2004	25.02	0.3177
Lowest	16QAM	1	0	22.95	0.1972	24.95	0.3126
Middle		1	0	22.80	0.1905	24.80	0.3020
Highest		1	0	22.56	0.1803	24.56	0.2858
Limit	EIRP < 2W			Result		PASS	

LTE Band 2 / 20MHz (Average) (GT - LC = 2 dB)							
Channel	Mode	RB		Conducted		EIRP	
		Size	Offset	Power (dBm)	Power (Watts)	EIRP(dBm)	EIRP(W)
Lowest	QPSK	1	0	22.86	0.1932	24.86	0.3062
Middle		1	0	23.10	0.2042	25.10	0.3236
Highest		1	0	22.95	0.1972	24.95	0.3126
Lowest	16QAM	1	0	22.67	0.1849	24.67	0.2931
Middle		1	0	22.79	0.1901	24.79	0.3013
Highest		1	0	22.73	0.1875	24.73	0.2972
Limit	EIRP < 2W			Result		PASS	

LTE Band 4 / 1.4MHz (Average) (GT - LC = 2 dB)							
Channel	Mode	RB		Conducted		EIRP	
		Size	Offset	Power (dBm)	Power (Watts)	EIRP(dBm)	EIRP(W)
Lowest	QPSK	1	0	22.39	0.1734	24.39	0.2748
Middle		1	0	22.60	0.1820	24.60	0.2884
Highest		1	0	22.76	0.1888	24.76	0.2992
Lowest	16QAM	1	3	22.28	0.1690	24.28	0.2679
Middle		1	3	22.35	0.1718	24.35	0.2723
Highest		1	3	22.44	0.1754	24.44	0.2780
Limit	EIRP < 1W			Result		PASS	

LTE Band 4 / 3MHz (Average) (GT - LC = 2 dB)							
Channel	Mode	RB		Conducted		EIRP	
		Size	Offset	Power (dBm)	Power (Watts)	EIRP(dBm)	EIRP(W)
Lowest	QPSK	1	0	22.81	0.1910	24.81	0.3027
Middle		1	0	22.59	0.1816	24.59	0.2877
Highest		1	0	22.60	0.1820	24.60	0.2884
Lowest	16QAM	1	0	22.36	0.1722	24.36	0.2729
Middle		1	0	22.37	0.1726	24.37	0.2735
Highest		1	0	22.41	0.1742	24.41	0.2761
Limit	EIRP < 1W			Result		PASS	

LTE Band 4 / 5MHz (Average) (GT - LC = 2 dB)							
Channel	Mode	RB		Conducted		EIRP	
		Size	Offset	Power (dBm)	Power (Watts)	EIRP(dBm)	EIRP(W)
Lowest	QPSK	1	0	22.60	0.1820	24.60	0.2884
Middle		1	0	22.80	0.1905	24.80	0.3020
Highest		1	0	22.32	0.1706	24.32	0.2704
Lowest	16QAM	1	0	22.37	0.1726	24.37	0.2735
Middle		1	0	22.39	0.1734	24.39	0.2748
Highest		1	0	22.48	0.1770	24.48	0.2805
Limit	EIRP < 1W			Result		PASS	

LTE Band 4 / 10MHz (Average) (GT - LC = 2 dB)							
Channel	Mode	RB		Conducted		EIRP	
		Size	Offset	Power (dBm)	Power (Watts)	EIRP(dBm)	EIRP(W)
Lowest	QPSK	1	0	22.99	0.1991	24.99	0.3155
Middle		1	0	22.84	0.1923	24.84	0.3048
Highest		1	0	22.59	0.1816	24.59	0.2877
Lowest	16QAM	1	0	22.17	0.1648	24.17	0.2612
Middle		1	0	22.22	0.1667	24.22	0.2642
Highest		1	0	22.47	0.1766	24.47	0.2799
Limit	EIRP < 1W			Result		PASS	

LTE Band 4 / 15MHz (Average) (GT - LC = 2 dB)							
Channel	Mode	RB		Conducted		EIRP	
		Size	Offset	Power (dBm)	Power (Watts)	EIRP(dBm)	EIRP(W)
Lowest	QPSK	1	74	23.30	0.2138	25.30	0.3388
Middle		1	74	23.05	0.2018	25.05	0.3199
Highest		1	74	22.82	0.1914	24.82	0.3034
Lowest	16QAM	1	0	22.19	0.1656	24.19	0.2624
Middle		1	0	22.10	0.1622	24.10	0.2570
Highest		1	0	22.56	0.1803	24.56	0.2858
Limit	EIRP < 1W			Result		PASS	

LTE Band 4 / 20MHz (Average) (GT - LC = 2 dB)							
Channel	Mode	RB		Conducted		EIRP	
		Size	Offset	Power (dBm)	Power (Watts)	EIRP(dBm)	EIRP(W)
Lowest	QPSK	1	49	23.01	0.2000	25.01	0.3170
Middle		1	49	22.95	0.1972	24.95	0.3126
Highest		1	49	22.83	0.1919	24.83	0.3041
Lowest	16QAM	1	99	22.30	0.1698	24.30	0.2692
Middle		1	99	22.10	0.1622	24.10	0.2570
Highest		1	99	22.55	0.1799	24.55	0.2851
Limit	EIRP < 1W			Result		PASS	

LTE Band 5 / 1.4MHz (Average) (GT - LC = 0 dB)							
Channel	Mode	RB		Conducted		ERP	
		Size	Offset	Power (dBm)	Power (Watts)	ERP(dBm)	ERP(W)
Lowest	QPSK	3	1	23.36	0.2168	21.21	0.1321
Middle		3	1	23.33	0.2153	21.18	0.1312
Highest		3	1	23.14	0.2061	20.99	0.1256
Lowest	16QAM	1	3	22.63	0.1832	20.48	0.1117
Middle		1	3	22.64	0.1837	20.49	0.1119
Highest		1	3	22.45	0.1758	20.30	0.1072
Limit	ERP < 7W			Result		PASS	

LTE Band 5 / 3MHz (Average) (GT - LC = 0 dB)							
Channel	Mode	RB		Conducted		ERP	
		Size	Offset	Power (dBm)	Power (Watts)	ERP(dBm)	ERP(W)
Lowest	QPSK	1	8	23.38	0.2178	21.23	0.1327
Middle		1	8	23.40	0.2188	21.25	0.1334
Highest		1	8	23.19	0.2084	21.04	0.1271
Lowest	16QAM	1	8	22.57	0.1807	20.42	0.1102
Middle		1	8	22.62	0.1828	20.47	0.1114
Highest		1	8	22.45	0.1758	20.30	0.1072
Limit	ERP < 7W			Result		PASS	

LTE Band 5 / 5MHz (Average) (GT - LC = 0 dB)							
Channel	Mode	RB		Conducted		ERP	
		Size	Offset	Power (dBm)	Power (Watts)	ERP(dBm)	ERP(W)
Lowest	QPSK	1	24	23.40	0.2188	21.25	0.1334
Middle		1	24	23.38	0.2178	21.23	0.1327
Highest		1	24	23.21	0.2094	21.06	0.1276
Lowest	16QAM	1	0	22.71	0.1866	20.56	0.1138
Middle		1	0	22.63	0.1832	20.48	0.1117
Highest		1	0	22.54	0.1795	20.39	0.1094
Limit	ERP < 7W			Result		PASS	

LTE Band 5 / 10MHz (Average) (GT - LC = 0 dB)							
Channel	Mode	RB		Conducted		ERP	
		Size	Offset	Power (dBm)	Power (Watts)	ERP(dBm)	ERP(W)
Lowest	QPSK	1	25	23.38	0.2178	21.23	0.1327
Middle		1	25	23.40	0.2188	21.25	0.1334
Highest		1	25	23.34	0.2158	21.19	0.1315
Lowest	16QAM	1	25	22.68	0.1854	20.53	0.1130
Middle		1	25	22.69	0.1858	20.54	0.1132
Highest		1	25	22.55	0.1799	20.40	0.1096
Limit	ERP < 7W			Result		PASS	

LTE Band 7 / 5MHz (Average) (GT - LC = 3 dB)							
Channel	Mode	RB		Conducted		EIRP	
		Size	Offset	Power (dBm)	Power (Watts)	EIRP(dBm)	EIRP(W)
Lowest	QPSK	1	24	23.13	0.2056	26.13	0.4102
Middle		1	24	23.16	0.2070	26.16	0.4130
Highest		1	24	23.30	0.2138	26.30	0.4266
Lowest	16QAM	1	0	22.42	0.1746	25.42	0.3483
Middle		1	0	22.42	0.1746	25.42	0.3483
Highest		1	0	22.59	0.1816	25.59	0.3622
Limit	EIRP < 2W			Result		PASS	

LTE Band 7 / 10MHz (Average) (GT - LC = 3 dB)							
Channel	Mode	RB		Conducted		EIRP	
		Size	Offset	Power (dBm)	Power (Watts)	EIRP(dBm)	EIRP(W)
Lowest	QPSK	1	25	23.19	0.2084	26.19	0.4159
Middle		1	25	23.26	0.2118	26.26	0.4227
Highest		1	25	23.33	0.2153	26.33	0.4295
Lowest	16QAM	1	25	22.31	0.1702	25.31	0.3396
Middle		1	25	22.36	0.1722	25.36	0.3436
Highest		1	25	22.49	0.1774	25.49	0.3540
Limit	EIRP < 2W			Result		PASS	

LTE Band 7 / 15MHz (Average) (GT - LC = 3 dB)							
Channel	Mode	RB		Conducted		EIRP	
		Size	Offset	Power (dBm)	Power (Watts)	EIRP(dBm)	EIRP(W)
Lowest	QPSK	1	74	23.30	0.2138	26.30	0.4266
Middle		1	74	23.33	0.2153	26.33	0.4295
Highest		1	74	23.15	0.2065	26.15	0.4121
Lowest	16QAM	1	0	22.77	0.1892	25.77	0.3776
Middle		1	0	22.73	0.1875	25.73	0.3741
Highest		1	0	22.95	0.1972	25.95	0.3936
Limit	EIRP < 2W			Result		PASS	

LTE Band 7 / 20MHz (Average) (GT - LC = 3 dB)							
Channel	Mode	RB		Conducted		EIRP	
		Size	Offset	Power (dBm)	Power (Watts)	EIRP(dBm)	EIRP(W)
Lowest	QPSK	1	99	23.32	0.2148	26.32	0.4285
Middle		1	99	23.31	0.2143	26.31	0.4276
Highest		1	99	23.42	0.2198	26.42	0.4385
Lowest	16QAM	1	0	22.45	0.1758	25.45	0.3508
Middle		1	0	22.50	0.1778	25.50	0.3548
Highest		1	0	22.63	0.1832	25.63	0.3656
Limit	EIRP < 2W			Result		PASS	

LTE Band 12 / 1.4MHz (Average) (GT - LC = 0 dB)							
Channel	Mode	RB		Conducted		ERP	
		Size	Offset	Power (dBm)	Power (Watts)	ERP(dBm)	ERP(W)
Lowest	QPSK	3	1	23.34	0.2158	21.19	0.1315
Middle		3	1	23.27	0.2123	21.12	0.1294
Highest		3	1	23.22	0.2099	21.07	0.1279
Lowest	16QAM	1	3	22.67	0.1849	20.52	0.1127
Middle		1	3	22.63	0.1832	20.48	0.1117
Highest		1	3	22.78	0.1897	20.63	0.1156
Limit	ERP < 3W			Result		PASS	

LTE Band 12 / 3MHz (Average) (GT - LC = 0 dB)							
Channel	Mode	RB		Conducted		ERP	
		Size	Offset	Power (dBm)	Power (Watts)	ERP(dBm)	ERP(W)
Lowest	QPSK	1	8	23.33	0.2153	21.18	0.1312
Middle		1	8	23.32	0.2148	21.17	0.1309
Highest		1	8	23.31	0.2143	21.16	0.1306
Lowest	16QAM	1	8	22.73	0.1875	20.58	0.1143
Middle		1	8	22.68	0.1854	20.53	0.1130
Highest		1	8	22.69	0.1858	20.54	0.1132
Limit	ERP < 3W			Result		PASS	

LTE Band 12 / 5MHz (Average) (GT - LC = 0 dB)							
Channel	Mode	RB		Conducted		ERP	
		Size	Offset	Power (dBm)	Power (Watts)	ERP(dBm)	ERP(W)
Lowest	QPSK	1	0	22.89	0.1945	20.74	0.1186
Middle		1	0	23.40	0.2188	21.25	0.1334
Highest		1	0	22.95	0.1972	20.80	0.1202
Lowest	16QAM	1	0	22.70	0.1862	20.55	0.1135
Middle		1	0	22.66	0.1845	20.51	0.1125
Highest		1	0	22.73	0.1875	20.58	0.1143
Limit	ERP < 3W			Result		PASS	

LTE Band 12 / 10MHz (Average) (GT - LC = 0 dB)							
Channel	Mode	RB		Conducted		ERP	
		Size	Offset	Power (dBm)	Power (Watts)	ERP(dBm)	ERP(W)
Lowest	QPSK	1	25	23.35	0.2163	21.20	0.1318
Middle		1	25	23.34	0.2158	21.19	0.1315
Highest		1	25	23.42	0.2198	21.27	0.1340
Lowest	16QAM	1	25	22.57	0.1807	20.42	0.1102
Middle		1	25	22.58	0.1811	20.43	0.1104
Highest		1	25	22.65	0.1841	20.50	0.1122
Limit	ERP < 3W			Result		PASS	

LTE Band 17 / 5MHz (Average) (GT - LC = 0 dB)							
Channel	Mode	RB		Conducted		ERP	
		Size	Offset	Power (dBm)	Power (Watts)	ERP(dBm)	ERP(W)
Lowest	QPSK	1	24	23.22	0.2099	21.07	0.1279
Middle		1	24	23.24	0.2109	21.09	0.1285
Highest		1	24	23.20	0.2089	21.05	0.1274
Lowest	16QAM	1	0	22.66	0.1845	20.51	0.1125
Middle		1	0	22.59	0.1816	20.44	0.1107
Highest		1	0	22.59	0.1816	20.44	0.1107
Limit	ERP < 3W			Result		PASS	

LTE Band 17 / 10MHz (Average) (GT - LC = 0 dB)							
Channel	Mode	RB		Conducted		ERP	
		Size	Offset	Power (dBm)	Power (Watts)	ERP(dBm)	ERP(W)
Lowest	QPSK	1	0	23.32	0.2148	21.17	0.1309
Middle		1	0	23.29	0.2133	21.14	0.1300
Highest		1	0	23.20	0.2089	21.05	0.1274
Lowest	16QAM	1	25	22.51	0.1782	20.36	0.1086
Middle		1	25	22.52	0.1786	20.37	0.1089
Highest		1	25	22.55	0.1799	20.40	0.1096
Limit	ERP < 3W			Result		PASS	

LTE Band 66 / 1.4MHz (Average) (GT - LC = 2 dB)							
Channel	Mode	RB		Conducted		EIRP	
		Size	Offset	Power (dBm)	Power (Watts)	EIRP(dBm)	EIRP(W)
Lowest	QPSK	3	1	22.69	0.1858	24.69	0.2944
Middle		3	1	22.96	0.1977	24.96	0.3133
Highest		3	1	22.71	0.1866	24.71	0.2958
Lowest	16QAM	1	3	22.44	0.1754	24.44	0.2780
Middle		1	3	22.75	0.1884	24.75	0.2985
Highest		1	3	22.49	0.1774	24.49	0.2812
Limit	EIRP < 1W			Result		PASS	

LTE Band 66 / 3MHz (Average) (GT - LC = 2 dB)							
Channel	Mode	RB		Conducted		EIRP	
		Size	Offset	Power (dBm)	Power (Watts)	EIRP(dBm)	EIRP(W)
Lowest	QPSK	1	8	22.65	0.1841	24.65	0.2917
Middle		1	8	22.95	0.1972	24.95	0.3126
Highest		1	8	22.57	0.1807	24.57	0.2864
Lowest	16QAM	1	0	22.43	0.1750	24.43	0.2773
Middle		1	0	22.76	0.1888	24.76	0.2992
Highest		1	0	22.51	0.1782	24.51	0.2825

LTE Band 66 / 5MHz (Average) (GT - LC = 2 dB)							
Channel	Mode	RB		Conducted		EIRP	
		Size	Offset	Power (dBm)	Power (Watts)	EIRP(dBm)	EIRP(W)
Lowest	QPSK	1	0	22.76	0.1888	24.76	0.2992
Middle		1	0	22.50	0.1778	24.50	0.2818
Highest		1	0	22.59	0.1816	24.59	0.2877
Lowest	16QAM	1	12	22.35	0.1718	24.35	0.2723
Middle		1	12	22.81	0.1910	24.81	0.3027
Highest		1	12	22.59	0.1816	24.59	0.2877
Limit	EIRP < 1W			Result		PASS	

LTE Band 66 / 10MHz (Average) (GT - LC = 2 dB)							
Channel	Mode	RB		Conducted		EIRP	
		Size	Offset	Power (dBm)	Power (Watts)	EIRP(dBm)	EIRP(W)
Lowest	QPSK	1	0	22.53	0.1791	24.53	0.2838
Middle		1	0	22.51	0.1782	24.51	0.2825
Highest		1	0	22.90	0.1950	24.90	0.3090
Lowest	16QAM	1	0	22.34	0.1714	24.34	0.2716
Middle		1	0	22.75	0.1884	24.75	0.2985
Highest		1	0	22.81	0.1910	24.81	0.3027
Limit	EIRP < 1W			Result		PASS	

LTE Band 66 / 15MHz (Average) (GT - LC = 2 dB)							
Channel	Mode	RB		Conducted		EIRP	
		Size	Offset	Power (dBm)	Power (Watts)	EIRP(dBm)	EIRP(W)
Lowest	QPSK	1	74	23.02	0.2004	25.02	0.3177
Middle		1	74	22.90	0.1950	24.90	0.3090
Highest		1	74	22.83	0.1919	24.83	0.3041
Lowest	16QAM	1	37	22.85	0.1928	24.85	0.3055
Middle		1	37	22.43	0.1750	24.43	0.2773
Highest		1	37	22.76	0.1888	24.76	0.2992
Limit	EIRP < 1W			Result		PASS	

LTE Band 66 / 20MHz (Average) (GT - LC = 2 dB)							
Channel	Mode	RB		Conducted		EIRP	
		Size	Offset	Power (dBm)	Power (Watts)	EIRP(dBm)	EIRP(W)
Lowest	QPSK	1	0	22.73	0.1875	24.73	0.2972
Middle		1	0	23.05	0.2018	25.05	0.3199
Highest		1	0	23.09	0.2037	25.09	0.3228
Lowest	16QAM	1	99	22.36	0.1722	24.36	0.2729
Middle		1	99	22.70	0.1862	24.70	0.2951
Highest		1	99	22.50	0.1778	24.50	0.2818
Limit	EIRP < 1W			Result		PASS	

Radiated Spurious Emission

LTE Band 2

LTE Band 2 / 15MHz / QPSK									
Channel	Frequency (MHz)	EIRP (dBm)	Limit (dBm)	Over Limit (dB)	SPA Reading (dBm)	S.G. Power (dBm)	TX Cable loss (dB)	TX Antenna Gain (dBi)	Polarization (H/V)
Lowest	3702	-48.16	-13	-35.16	-68.88	-54.73	1.67	8.24	H
	5550	-37.74	-13	-24.74	-62.81	-44.81	2.65	9.72	H
	7400	-50.61	-13	-37.61	-77.52	-59.75	2.46	11.60	H
									H
									H
									H
	3702	-47.94	-13	-34.94	-68.64	-54.51	1.67	8.24	V
	5550	-38.88	-13	-25.88	-63.89	-45.95	2.65	9.72	V
	7400	-50.39	-13	-37.39	-77.5	-59.53	2.46	11.60	V
									V
									V
									V
Middle	3744	-40.96	-13	-27.96	-61.65	-47.57	1.68	8.29	H
	5622	-37.33	-13	-24.33	-62.52	-44.38	2.70	9.75	H
	7490	-50.74	-13	-37.74	-77.68	-60.09	2.43	11.78	H
									H
									H
									H
	3744	-40.31	-13	-27.31	-60.96	-46.92	1.68	8.29	V
	5622	-37.07	-13	-24.07	-62.29	-44.12	2.70	9.75	V
	7490	-50.48	-13	-37.48	-77.7	-59.83	2.43	11.78	V
									V
									V
									V

Highest	3790	-50.41	-13	-37.41	-71.04	-57.06	1.70	8.35	H
	5688	-33.64	-13	-20.64	-58.99	-40.68	2.73	9.78	H
	7580	-49.83	-13	-36.83	-77.06	-59.27	2.40	11.85	H
									H
									H
									H
									H
	3790	-50.67	-13	-37.67	-71.37	-57.32	1.70	8.35	V
	5688	-33.67	-13	-20.67	-58.99	-40.71	2.73	9.78	V
	7580	-49.71	-13	-36.71	-77.16	-59.15	2.40	11.85	V
									V
									V
									V
									V

Remark: Spurious emissions within 30-1000MHz were found more than 20dB below limit line.

LTE Band 4

LTE Band 4 / 15MHz / QPSK									
Channel	Frequency (MHz)	EIRP (dBm)	Limit (dBm)	Over Limit (dB)	SPA Reading (dBm)	S.G. Power (dBm)	TX Cable loss (dB)	TX Antenna Gain (dBi)	Polarization (H/V)
Lowest	3450	-54.36	-13	-41.36	-74.98	-60.55	1.59	7.78	H
	5172	-49.62	-13	-36.62	-73.69	-56.88	2.44	9.70	H
	6900	-51.26	-13	-38.26	-77.82	-59.32	2.62	10.68	H
									H
									H
									H
									H
	3450	-55.08	-13	-42.08	-75.73	-61.27	1.59	7.78	V
	5172	-46.86	-13	-33.86	-70.81	-54.12	2.44	9.70	V
	6900	-51.28	-13	-38.28	-77.84	-59.34	2.62	10.68	V
									V
									V
									V
									V
Middle	3480	-55.78	-13	-42.78	-76.6	-62.09	1.60	7.91	H
	5220	-46.28	-13	-33.28	-70.43	-53.52	2.46	9.70	H
	6960	-50.98	-13	-37.98	-77.68	-59.13	2.60	10.75	H
									H
									H
									H
									H
	3480	-55.66	-13	-42.66	-76.4	-61.97	1.60	7.91	V
	5220	-45.81	-13	-32.81	-69.87	-53.05	2.46	9.70	V
	6960	-50.94	-13	-37.94	-77.65	-59.09	2.60	10.75	V
									V
									V
									V
									V

Highest	3510	-52.34	-13	-39.34	-73.24	-58.74	1.61	8.01	H
	5262	-48.43	-13	-35.43	-72.73	-55.64	2.49	9.70	H
	7020	-50.37	-13	-37.37	-77.1	-58.63	2.58	10.84	H
									H
									H
									H
									H
	3510	-53.46	-13	-40.46	-74.19	-59.86	1.61	8.01	V
	5262	-43.67	-13	-30.67	-67.84	-50.88	2.49	9.70	V
	7020	-50.58	-13	-37.58	-77.35	-58.84	2.58	10.84	V
									V
									V
									V
									V

Remark: Spurious emissions within 30-1000MHz were found more than 20dB below limit line.

LTE Band 66

LTE Band 66 / 20MHz / QPSK									
Channel	Frequency (MHz)	EIRP (dBm)	Limit (dBm)	Over Limit (dB)	SPA Reading (dBm)	S.G. Power (dBm)	TX Cable loss (dB)	TX Antenna Gain (dBi)	Polarization (H/V)
Lowest	3438	-50.32	-13	-37.32	-70.87	-56.46	1.58	7.73	H
	5160	-40.26	-13	-27.26	-64.33	-47.53	2.43	9.70	H
	6880	-51.42	-13	-38.42	-78.01	-59.45	2.63	10.66	H
									H
									H
									H
									H
	3438	-49.34	-13	-36.34	-69.9	-55.48	1.58	7.73	V
	5160	-38.11	-13	-25.11	-62.04	-45.38	2.43	9.70	V
	6880	-51.25	-13	-38.25	-77.85	-59.28	2.63	10.66	V
									V
									V
									V
									V
Middle	3492	-49.96	-13	-36.96	-70.83	-56.32	1.60	7.96	H
	5232	-36.98	-13	-23.98	-61.25	-44.21	2.47	9.70	H
	6980	-50.58	-13	-37.58	-77.22	-58.76	2.60	10.78	H
									H
									H
									H
									H
	3492	-48.98	-13	-35.98	-69.77	-55.34	1.60	7.96	V
	5232	-40.64	-13	-27.64	-64.77	-47.87	2.47	9.70	V
	6980	-51.04	-13	-38.04	-77.79	-59.22	2.60	10.78	V
									V
									V
									V
									V

Highest	3540	-48.54	-13	-35.54	-69.38	-54.97	1.62	8.05	H
	5310	-41.98	-13	-28.98	-66.47	-49.16	2.52	9.70	H
	7080	-50.23	-13	-37.23	-76.9	-58.63	2.56	10.96	H
									H
									H
									H
									H
	3540	-50.36	-13	-37.36	-71.14	-56.79	1.62	8.05	V
	5310	-42.99	-13	-29.99	-67.37	-50.17	2.52	9.70	V
	7080	-50.12	-13	-37.12	-76.96	-58.52	2.56	10.96	V
									V
									V
									V
									V

Remark: Spurious emissions within 30-1000MHz were found more than 20dB below limit line.

LTE Band 5

LTE Band 5 / 10MHz / QPSK									
Channel	Frequency (MHz)	ERP (dBm)	Limit (dBm)	Over Limit (dB)	SPA Reading (dBm)	S.G. Power (dBm)	TX Cable loss (dB)	TX Antenna Gain (dBi)	Polarization (H/V)
Lowest	1656	-62.78	-13	-49.78	-75.26	-64.51	0.98	4.86	H
	2488	-57.23	-13	-44.23	-74.76	-59.16	1.29	5.36	H
	3320	-57.64	-13	-44.64	-77.36	-61.15	1.55	7.21	H
									H
									H
									H
									H
	1656	-62.12	-13	-49.12	-74.98	-63.85	0.98	4.86	V
	2488	-56.89	-13	-43.89	-74.87	-58.82	1.29	5.36	V
	3320	-57.04	-13	-44.04	-76.99	-60.55	1.55	7.21	V
									V
									V
									V
									V
Middle	1672	-62.41	-13	-49.41	-75.02	-64.09	0.99	4.82	H
	2512	-55.59	-13	-42.59	-73.18	-57.56	1.29	5.41	H
	3344	-57.26	-13	-44.26	-77.08	-60.87	1.56	7.31	H
									H
									H
									H
									H
	1672	-62.45	-13	-49.45	-75.44	-64.13	0.99	4.82	V
	2512	-56.71	-13	-43.71	-74.75	-58.68	1.29	5.41	V
	3344	-57.53	-13	-44.53	-77.64	-61.14	1.56	7.31	V
									V
									V
									V
									V

Highest	1688	-62.53	-13	-49.53	-75.17	-64.16	1.00	4.77	H
	2536	-55.81	-13	-42.81	-73.4	-57.79	1.30	5.43	H
	3376	-57.47	-13	-44.47	-77.5	-61.21	1.57	7.45	H
									H
									H
									H
									H
	1688	-61.74	-13	-48.74	-74.84	-63.37	1.00	4.77	V
	2536	-57.02	-13	-44.02	-75.11	-59	1.30	5.43	V
	3376	-56.93	-13	-43.93	-77.13	-60.67	1.57	7.45	V
									V
									V
									V
									V

Remark: Spurious emissions within 30-1000MHz were found more than 20dB below limit line.

LTE Band 7

LTE Band 7 / 20MHz / QPSK									
Channel	Frequency (MHz)	EIRP (dBm)	Limit (dBm)	Over Limit (dB)	SPA Reading (dBm)	S.G. Power (dBm)	TX Cable loss (dB)	TX Antenna Gain (dBi)	Polarization (H/V)
Lowest	5004	-53.90	-25	-28.90	-77.84	-61.26	2.34	9.70	H
	7500	-50.58	-25	-25.58	-77.8	-59.95	2.43	11.80	H
	10008	-45.20	-25	-20.20	-76.87	-54.71	2.70	12.20	H
									H
									H
									H
									H
	5004	-54.07	-25	-29.07	-77.82	-61.43	2.34	9.70	V
	7500	-50.37	-25	-25.37	-77.83	-59.74	2.43	11.80	V
	10008	-45.40	-25	-20.40	-77	-54.91	2.70	12.20	V
									V
									V
									V
									V
Middle	5052	-53.85	-25	-28.85	-77.88	-61.18	2.37	9.70	H
	7578	-50.10	-25	-25.10	-77.56	-59.54	2.40	11.85	H
	10098	-44.91	-25	-19.91	-76.81	-54.45	2.70	12.24	H
									H
									H
									H
									H
	5052	-54.26	-25	-29.26	-78.11	-61.59	2.37	9.70	V
	7578	-49.80	-25	-24.80	-77.51	-59.24	2.40	11.85	V
	10098	-45.36	-25	-20.36	-77.18	-54.9	2.70	12.24	V
									V
									V
									V
									V

Highest	5100	-53.59	-25	-28.59	-77.76	-60.9	2.39	9.70	H
	7680	-48.70	-25	-23.70	-76.42	-58.24	2.37	11.91	H
	10242	-45.68	-25	-20.68	-77.94	-55.28	2.69	12.30	H
									H
									H
									H
									H
	5100	-53.45	-25	-28.45	-77.44	-60.76	2.39	9.70	V
	7680	-48.27	-25	-23.27	-76.27	-57.81	2.37	11.91	V
	10242	-45.54	-25	-20.54	-77.69	-55.14	2.69	12.30	V
									V
									V
									V
									V

Remark: Spurious emissions within 30-1000MHz were found more than 20dB below limit line.

LTE Band 12

LTE Band 12 / 10MHz / QPSK									
Channel	Frequency (MHz)	ERP (dBm)	Limit (dBm)	Over Limit (dB)	SPA Reading (dBm)	S.G. Power (dBm)	TX Cable loss (dB)	TX Antenna Gain (dBi)	Polarization (H/V)
Lowest	1408	-59.67	-13	-46.67	-70.02	-61.38	0.87	4.73	H
	2112	-45.34	-13	-32.34	-60.91	-46.26	1.17	4.24	H
	2816	-59.31	-13	-46.31	-76.97	-61.42	1.39	5.65	H
									H
									H
									H
									H
	1408	-60.33	-13	-47.33	-71.16	-62.04	0.87	4.73	V
	2112	-49.26	-13	-36.26	-65.13	-50.18	1.17	4.24	V
	2816	-58.47	-13	-45.47	-76.94	-60.58	1.39	5.65	V
									V
									V
									V
									V
Middle	1416	-59.57	-13	-46.57	-69.85	-61.32	0.87	4.78	H
	2120	-46.84	-13	-33.84	-62.48	-47.78	1.17	4.26	H
	2830	-59.07	-13	-46.07	-76.75	-61.19	1.39	5.66	H
									H
									H
									H
									H
	1416	-61.64	-13	-48.64	-72.46	-63.39	0.87	4.78	V
	2120	-48.07	-13	-35.07	-64.04	-49.01	1.17	4.26	V
	2830	-58.31	-13	-45.31	-76.78	-60.43	1.39	5.66	V
									V
									V
									V
									V

Highest	1424	-59.82	-13	-46.82	-70.67	-61.62	0.88	4.83	H
	2136	-47.06	-13	-34.06	-63.02	-48.04	1.18	4.31	H
	2840	-59.17	-13	-46.17	-77.11	-61.29	1.40	5.67	H
									H
									H
									H
									H
	1424	-59.76	-13	-46.76	-70.95	-61.56	0.88	4.83	V
	2136	-47.51	-13	-34.51	-63.87	-48.49	1.18	4.31	V
	2840	-58.31	-13	-45.31	-76.98	-60.43	1.40	5.67	V
									V
									V
									V
									V

Remark: Spurious emissions within 30-1000MHz were found more than 20dB below limit line.

LTE Band 17

LTE Band 17 / 10MHz / QPSK									
Channel	Frequency (MHz)	ERP (dBm)	Limit (dBm)	Over Limit (dB)	SPA Reading (dBm)	S.G. Power (dBm)	TX Cable loss (dB)	TX Antenna Gain (dBi)	Polarization (H/V)
Lowest	1416	-63.47	-13	-50.47	-74.09	-65.22	0.87	4.78	H
	2128	-52.99	-13	-39.99	-68.83	-53.95	1.17	4.28	H
	2840	-59.06	-13	-46.06	-77.03	-61.18	1.40	5.67	H
									H
									H
									H
									H
	1416	-62.11	-13	-49.11	-73.22	-63.86	0.87	4.78	V
	2128	-55.58	-13	-42.58	-71.74	-56.54	1.17	4.28	V
	2840	-58.55	-13	-45.55	-77.38	-60.67	1.40	5.67	V
									V
									V
									V
									V
Middle	1424	-60.49	-13	-47.49	-71.29	-62.29	0.88	4.83	H
	2128	-53.16	-13	-40.16	-69.01	-54.12	1.17	4.28	H
	2840	-59.16	-13	-46.16	-77.10	-61.28	1.40	5.67	H
									H
									H
									H
									H
	1424	-61.36	-13	-48.36	-72.55	-63.16	0.88	4.83	V
	2128	-54.07	-13	-41.07	-70.31	-55.03	1.17	4.28	V
	2840	-58.41	-13	-45.41	-77.12	-60.53	1.40	5.67	V
									V
									V
									V
									V

Highest	1424	-61.03	-13	-48.03	-71.82	-62.83	0.88	4.83	H
	2136	-52.25	-13	-39.25	-68.19	-53.23	1.18	4.31	H
	2840	-59.35	-13	-46.35	-77.19	-61.47	1.40	5.67	H
									H
									H
									H
									H
	1424	-60.89	-13	-47.89	-72.08	-62.69	0.88	4.83	V
	2136	-53.46	-13	-40.46	-69.75	-54.44	1.18	4.31	V
	2840	-58.24	-13	-45.24	-76.94	-60.36	1.40	5.67	V
									V
									V
									V
									V

Remark: Spurious emissions within 30-1000MHz were found more than 20dB below limit line.

———THE END———