# FCC RADIO TEST REPORT

| | | |
|---|---|---|
| **FCC ID** | : | **IHDT56XP4** |
| **Equipment** | : | **Mobile Cellular Phone** |
| **Brand Name** | : | **Motorola** |
| **Model Name** | : | **XT1962-6** |
| **Applicant** | : | **Motorola Mobility LLC**<br>**222 W,Merchandise Mart Plaza, Chicago IL 60654 USA** |
| **Manufacturer** | : | **Motorola Mobility LLC**<br>**222 W,Merchandise Mart Plaza, Chicago IL 60654 USA** |
| **Standard** | : | **47 CFR Part 2, 22(H), 24(E), 27(L)** |

**The product was received on Sep. 08, 2018 and testing was started from Sep. 29, 2018 and completed on Oct. 10, 2018. We, SPORTON INTERNATIONAL INC., would like to declare that the tested sample has been evaluated in accordance with the test procedures given in ANSI / TIA-603-E and has been in compliance with the applicable technical standards.**

**The report must not be used by the client to claim product certification, approval, or endorsement by TAF or any agency of government.**

**The test results in this variant report apply exclusively to the tested model / sample. Without written approval of SPORTON INTERNATIONAL INC. EMC & Wireless Communications Laboratory, the test report shall not be reproduced except in full.**

**Approved by: Joseph Lin**

***SPORTON INTERNATIONAL INC. EMC & Wireless Communications Laboratory***
*No. 52, Huaya 1st Rd., Guishan Dist., Taoyuan City, Taiwan (R.O.C.)*

# Table of Contents

**History of this test report** ..... **3**
**Summary of Test Result** ..... **4**
**1 General Description** ..... **5**
1.1 Product Feature of Equipment Under Test ..... 5
1.2 Product Specification of Equipment Under Test ..... 7
1.3 Modification of EUT ..... 7
1.4 Maximum ERP/EIRP Power, Frequency Tolerance, and Emission Designator ..... 8
1.5 Testing Location ..... 8
1.6 Applicable Standards ..... 9
**2 Test Configuration of Equipment Under Test** ..... **10**
2.1 Test Mode ..... 10
2.2 Connection Diagram of Test System ..... 11
2.3 Support Unit used in test configuration ..... 11
2.4 Frequency List of Low/Middle/High Channels ..... 11
**3 Conducted Test Result** ..... **12**
3.1 Measuring Instruments ..... 12
3.2 Conducted Output Power and ERP/EIRP ..... 13
**4 Radiated Test Items** ..... **14**
4.1 Measuring Instruments ..... 14
4.2 Test Setup ..... 14
4.3 Test Result of Radiated Test ..... 14
4.4 Field Strength of Spurious Radiation Measurement ..... 15
**5 List of Measuring Equipment** ..... **16**
**6 Uncertainty of Evaluation** ..... **18**
**Appendix A. Test Results of Conducted Test**
**Appendix B. Test Results of ERP/EIRP and Radiated Test**

# History of this test report

| Report No. | Version | Description | Issued Date |
|---|---|---|---|
| FG890804-04A | 01 | Initial issue of report | Oct. 30, 2018 |
| | | | |
| | | | |
| | | | |
| | | | |
| | | | |
| | | | |
| | | | |
| | | | |
| | | | |
| | | | |
| | | | |
| | | | |
| | | | |
| | | | |

# Summary of Test Result

| Report Clause | Ref Std. Clause | Test Items | Result (PASS/FAIL) | Remark |
|---|---|---|---|---|
| 3.2 | §2.1046 | Conducted Output Power | Pass | - |
| | §22.913 (a)(2) | Effective Radiated Power | | |
| | §24.232 (c) | Equivalent Isotropic Radiated Power | | |
| | §27.50 (d)(4) | Equivalent Isotropic Radiated Power | | |
| - | §24.232 (d) | Peak-to-Average Ratio | Not Required | - |
| - | §2.1049<br>§22.917 (b)<br>§24.238 (b)<br>§27.53 (g) | Occupied Bandwidth | Not Required | - |
| - | §2.1051<br>§22.917 (a)<br>§24.238 (a)<br>§27.53 (g) | Band Edge Measurement | Not Required | - |
| - | §2.1051<br>§22.917 (a)<br>§24.238 (a)<br>§27.53 (g) | Conducted Emission | Not Required | - |
| - | §2.1055<br>§22.355 | Frequency Stability Temperature & Voltage | Not Required | - |
| | §2.1055<br>§24.235<br>§27.54 | | | - |
| 4.4 | §2.1053<br>§22.917 (a)<br>§24.238 (a)<br>§27.53 (h) | Field Strength of Spurious Radiation | Pass | Under limit 20.30 dB at 5640.000 MHz |

**Remark:**

**1.** Not required means after assessing, test items are not necessary to carry out.

**2.** This is a variant report. All the test cases were performed on original report which can be referred to Sporton Report Number FG890804A and FG890804-02A.

**Reviewed by: Wii Chang**

**Report Producer: Natasha Hsieh**

# 1 General Description

## 1.1 Product Feature of Equipment Under Test

| Product Feature | | |
|---|---|---|
| **Equipment** | Mobile Cellular Phone | |
| **Brand Name** | Motorola | |
| **Model Name** | XT1962-6 | |
| **FCC ID** | IHDT56XP4 | |
| **IMEI Code** | **Conducted :** | IMEI1:355579090011036<br>IMEI2:355579090011044 |
| | **Radiation :** | IMEI1: 355579090014212<br>IMEI2: 355579090014220 |
| **EUT supports Radios application** | GSM/EGPRS/WCDMA/HSPA/LTE/GNSS/FM<br>WLAN 11b/g/n HT20<br>WLAN 11a/n HT20/HT40<br>Bluetooth BR/EDR/LE | |
| **HW Version** | DVT1B | |
| **EUT Stage** | Identical Prototype | |

**Remark:** The above EUT's information was declared by manufacturer.

| Accessory List | | |
|---|---|---|
| AC Adapter 1 | Brand Name : | Motorola |
| | Model Name : | SC-51 |
| | Manufacturer : | Salom |
| AC Adapter 1 | Brand Name : | Motorola |
| | Model Name : | SC-52 |
| | Manufacturer : | Salom |
| AC Adapter 1 | Brand Name : | Motorola |
| | Model Name : | SC-53 |
| | Manufacturer : | Salom |
| AC Adapter 1 | Brand Name : | Motorola |
| | Model Name : | SC-55 |
| | Manufacturer : | Salom |
| AC Adapter 1 (IN) | Brand Name : | Motorola |
| | Model Name : | SC-55 |
| | Manufacturer : | Salom |
| AC Adapter 1 (IN Local Build) | Brand Name : | Motorola |
| | Model Name : | SC-54 |
| | Manufacturer : | Flex |
| AC Adapter 2 | Brand Name : | Motorola |
| | Model Name : | SC-51 |
| | Manufacturer : | Chenyang |
| AC Adapter 2 | Brand Name : | Motorola |
| | Model Name : | SC-52 |
| | Manufacturer : | Chenyang |
| AC Adapter 2 | Brand Name : | Motorola |
| | Model Name : | SC-53 |
| | Manufacturer : | Chenyang |
| AC Adapter 2 | Brand Name : | Motorola |
| | Model Name : | SC-55 |
| | Manufacturer : | Chenyang |
| AC Adapter 2 (IN Local Build) | Brand Name : | Motorola |
| | Model Name : | SC-54 |
| | Manufacturer : | Chenyang |
| Battery | Brand Name : | Motorola |
| | Model Name : | JG30 |
| | Manufacturer : | Amperex |
| Earphone | Brand Name : | Motorola |
| | Model Name : | SH38C37773 |
| | Manufacturer : | Lyand |
| USB Cable 1 | Brand Name : | Cabletech |
| | Model Name : | SKN6473A |
| USB Cable 2 | Brand Name : | Saibao |
| | Model Name : | SKN6473A |
| USB Cable 3 | Brand Name : | Luxshare |
| | Model Name : | SKN6473A |

## 1.2 Product Specification of Equipment Under Test

| Standards-related Product Specification | |
|---|---|
| **Tx Frequency** | **GSM/GPRS/EDGE:**<br>850: 824.2 MHz ~ 848.8 MHz<br>1900: 1850.2 MHz ~ 1909.8 MHz<br>**WCDMA:**<br>Band V: 826.4 MHz ~ 846.6 MHz<br>Band II: 1852.4 MHz ~ 1907.6 MHz<br>Band IV: 1712.4 MHz ~ 1752.6 MHz |
| **Rx Frequency** | **GSM/GPRS/EDGE:**<br>850: 869.2 MHz ~ 893.8 MHz<br>1900: 1930.2 MHz ~ 1989.8 MHz<br>**WCDMA:**<br>Band V: 871.4 MHz ~ 891.6 MHz<br>Band II: 1932.4 MHz ~ 1987.6 MHz<br>Band IV: 2112.4 MHz ~ 2152.6 MHz |
| **Maximum Output Power to Antenna** | **GSM/GPRS/EDGE:**<br>850: 33.00 dBm<br>1900: 29.55 dBm<br>**WCDMA:**<br>Band V: 23.40 dBm<br>Band II: 22.99 dBm<br>Band IV: 23.08 dBm |
| **Antenna Type** | Fixed Internal Antenna and Dipole Antenna |
| **Antenna Gain** | Cellular Band: 0.0 dBi<br>PCS Band: 2.0 dBi<br>AWS Band: 2.0 dBi |
| **Type of Modulation** | GSM: GMSK<br>GPRS: GMSK<br>EDGE: GMSK / 8PSK<br>WCDMA: BPSK (Uplink)<br>HSDPA: 16QAM (Downlink)<br>HSUPA: QPSK (Uplink) |

## 1.3 Modification of EUT

No modifications are made to the EUT during all test items.

## 1.4 Maximum ERP/EIRP Power, Frequency Tolerance, and Emission Designator

| FCC Rule | Frequency Range (MHz) | System | Type of Modulation | Maximum ERP/EIRP (W) | Frequency Tolerance (ppm) | Emission Designator |
|---|---|---|---|---|---|---|
| Part 22 | 824.2 ~848.8 | GSM850 GSM | GMSK | 1.2162 | - | - |
| Part 22 | 824.2 ~848.8 | GSM850 EDGE class 8 | 8PSK | 0.2884 | - | - |
| Part 22 | 826.4 ~846.6 | WCDMA Band V RMC 12.2Kbps | BPSK | 0.1334 | - | - |
| Part 24 | 1850.2 ~1909.8 | GSM1900 GSM | GMSK | 1.4289 | - | - |
| Part 24 | 1850.2 ~1909.8 | GSM1900 EDGE class 8 | 8PSK | 0.6109 | - | - |
| Part 24 | 1852.4 ~ 1907.6 | WCDMA Band II RMC 12.2Kbps | BPSK | 0.3155 | - | - |
| Part 27 | 1712.4 ~ 1752.6 | WCDMA Band IV RMC 12.2Kbps | BPSK | 0.3221 | - | - |

## 1.5 Testing Location

Sporton Lab is accredited to ISO 17025 by Taiwan Accreditation Foundation (TAF code : 1190) and the FCC designation No. TW1190 under the FCC 2.948(e) by Mutual Recognition Agreement (MRA) in FCC Test.

| **Test Site** | SPORTON INTERNATIONAL INC. | |
|---|---|---|
| **Test Site Location** | No.52, Huaya 1st Rd., Guishan Dist.,<br>Taoyuan City, Taiwan (R.O.C.)<br>TEL: +886-3-327-3456<br>FAX: +886-3-328-4978 | |
| **Test Site No.** | **Sporton Site No.** | |
| | TH05-HY | 03CH07-HY |

**Note:** The test site complies with ANSI C63.4 2014 requirement.

## 1.6 Applicable Standards

According to the specifications of the manufacturer, the EUT must comply with the requirements of the following standards:

- ANSI C63.26-2015
- ANSI / TIA-603-E
- 47 CFR Part 2, 22(H), 24(E), 27(L)
- FCC KDB 971168 D01 Power Meas. License Digital Systems v03r01
- FCC KDB 412172 D01 Determining ERP and EIRP v01r01

**Remark:**

1. All test items were verified and recorded according to the standards and without any deviation during the test.
2. This EUT has also been tested and complied with the requirements of FCC Part 15, Subpart B, recorded in a separate test report.

# 2 Test Configuration of Equipment Under Test

## 2.1 Test Mode

Antenna port conducted and radiated test items were performed according to KDB 971168 D01 Power Meas. License Digital Systems v03r01 with maximum output power.

For radiated measurement, pre-scanned in three orthogonal panels, X, Y, Z. The worst cases (X plane for Cellular Band and Z plane for PCS Band and AWS Band) were recorded in this report.

Radiated emissions were investigated as following frequency range:

1. 30 MHz to 9000 MHz for GSM850 and WCDMA Band V.
2. 30 MHz to 18000 MHz for WCDMA Band IV.
3. 30 MHz to 19100 MHz for GSM1900 and WCDMA Band II.

All modes and data rates and positions were investigated.

Test modes are chosen to be reported as the worst case configuration below:

| Test Modes | | |
|---|---|---|
| **Band** | **Radiated TCs** | **Conducted TCs** |
| **GSM 850** | ■ GSM Link<br>■ EDGE Class 8 Link | ■ GSM Link<br>■ EDGE Class 8 Link |
| **GSM 1900** | ■ GSM Link<br>■ EDGE Class 8 Link | ■ GSM Link<br>■ EDGE Class 8 Link |
| **WCDMA Band V** | ■ RMC 12.2Kbps Link | ■ RMC 12.2Kbps Link |
| **WCDMA Band II** | ■ RMC 12.2Kbps Link | ■ RMC 12.2Kbps Link |
| **WCDMA Band IV** | ■ RMC 12.2Kbps Link | ■ RMC 12.2Kbps Link |

**Remark:** All the radiated test cases were performed with Adapter 1 and USB Cable 1 Type C..

## 2.2 Connection Diagram of Test System

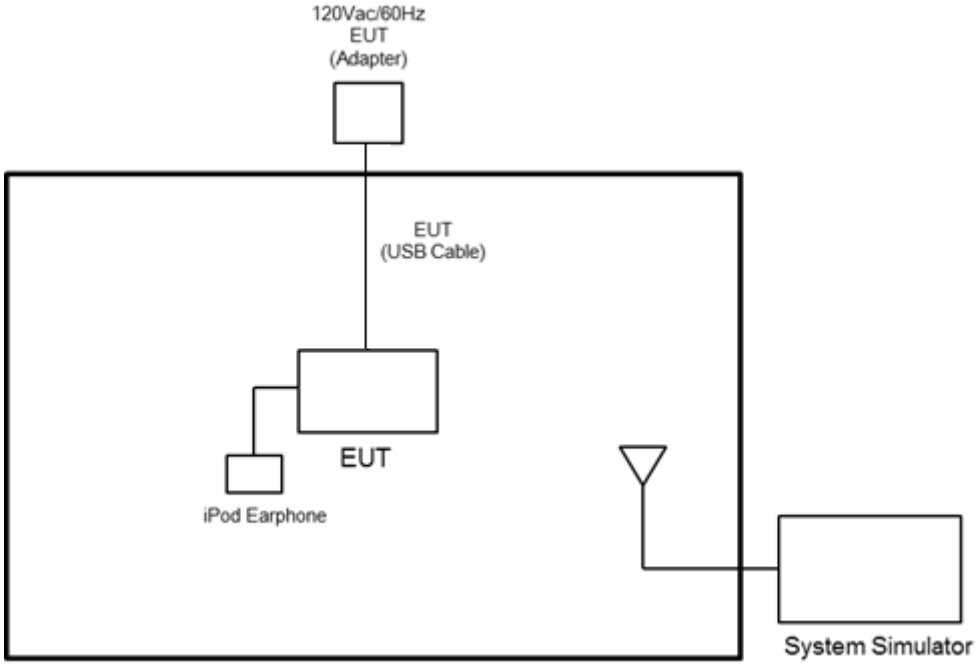


## 2.3 Support Unit used in test configuration

| Item | Equipment | Trade Name | Model No. | FCC ID | Data Cable | Power Cord |
|---|---|---|---|---|---|---|
| 1. | LTE Base Station | Anritsu | MT8820C | N/A | N/A | Unshielded, 1.8 m |
| 2. | System Simulator | R&S | CMU 200 | N/A | N/A | Unshielded, 1.8 m |

## 2.4 Frequency List of Low/Middle/High Channels

| Frequency List | | | | |
|---|---|---|---|---|
| **Band** | **Channel/Frequency(MHz)** | **Lowest** | **Middle** | **Highest** |
| GSM850 | Channel | 128 | 189 | 251 |
| | Frequency | 824.2 | 836.4 | 848.8 |
| WCDMA Band V | Channel | 4132 | 4182 | 4233 |
| | Frequency | 826.4 | 836.4 | 846.6 |
| GSM1900 | Channel | 512 | 661 | 810 |
| | Frequency | 1850.2 | 1880.0 | 1909.8 |
| WCDMA Band II | Channel | 9262 | 9400 | 9538 |
| | Frequency | 1852.4 | 1880.0 | 1907.6 |
| WCDMA Band IV | Channel | 1312 | 1413 | 1513 |
| | Frequency | 1712.4 | 1732.6 | 1752.6 |

# 3 Conducted Test Result

## 3.1 Measuring Instruments

See list of measuring instruments of this test report.

### 3.1.1 Test Setup

### 3.1.2 Conducted Output Power

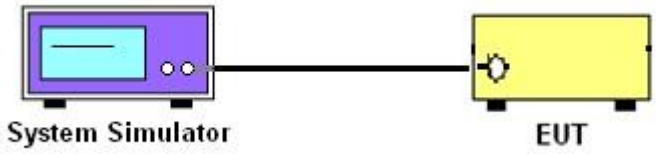


### 3.1.3 Test Result of Conducted Test

Please refer to Appendix A.

## 3.2 Conducted Output Power and ERP/EIRP

### 3.2.1 Description of the Conducted Output Power and ERP/EIRP

A system simulator was used to establish communication with the EUT. Its parameters were set to enforce EUT transmitting at the maximum power. The measured power in the radio frequency on the transmitter output terminals shall be reported.

The ERP of mobile transmitters must not exceed 7 Watts for GSM850 and WCDMA Band V.

The EIRP of mobile transmitters must not exceed 2 Watts for GSM1900 and WCDMA Band II.

The EIRP of mobile transmitters must not exceed 1 Watts for WCDMA Band IV.

According to KDB 412172 D01 Power Approach,

EIRP = $P_T + G_T – L_C$, ERP = EIRP -2.15, where

$P_T$ = transmitter output power in dBm

$G_T$ = gain of the transmitting antenna in dBi

$L_C$ = signal attenuation in the connecting cable between the transmitter and antenna in dB

### 3.2.2 Test Procedures

1. The transmitter output port was connected to the system simulator.
2. Set EUT at maximum power through system simulator.
3. Select lowest, middle, and highest channels for each band and different modulation.
4. Measure the maximum burst average power for GSM and maximum average power for other modulation signal.

# 4 Radiated Test Items

## 4.1 Measuring Instruments

See list of measuring instruments of this test report.

## 4.2 Test Setup

**For radiated test from 30MHz to 1GHz**

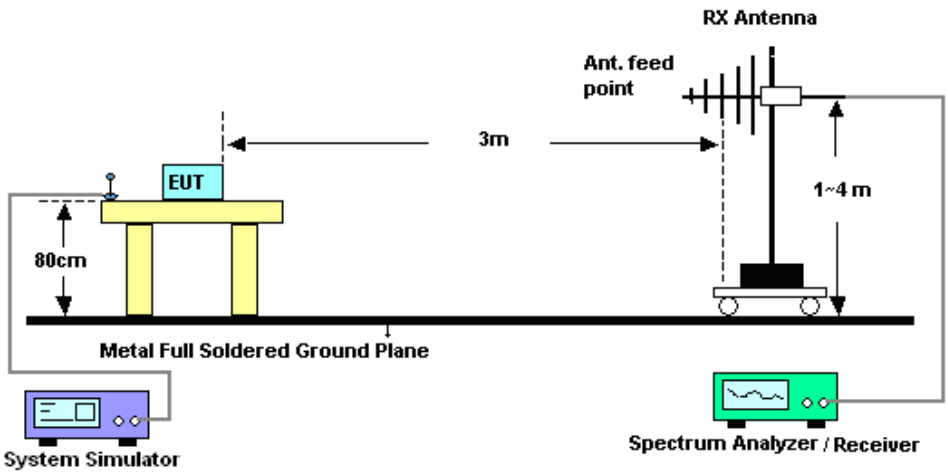


**For radiated test above 1GHz**

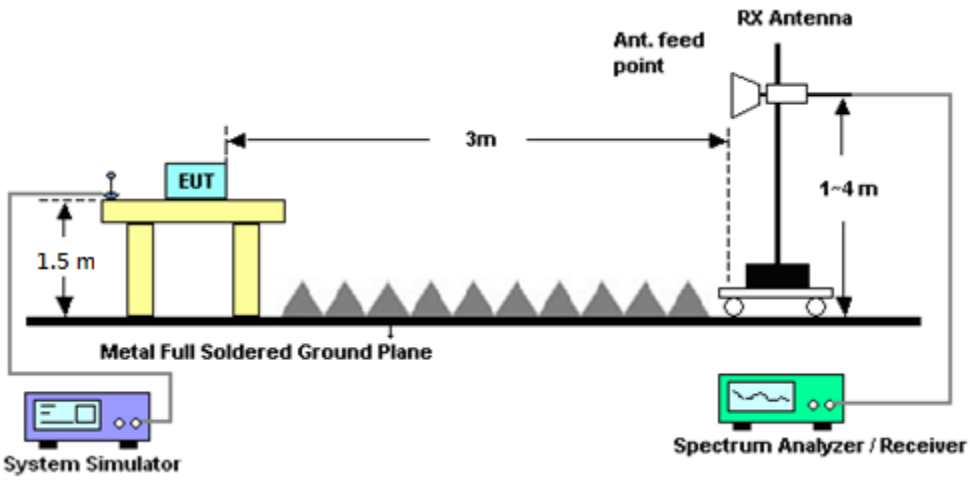


## 4.3 Test Result of Radiated Test

Please refer to Appendix B.

## 4.4 Field Strength of Spurious Radiation Measurement

### 4.4.1 Description of Field Strength of Spurious Radiated Measurement

The power of any emission outside of the authorized operating frequency ranges must be attenuated below the transmitter power (P) by a factor of at least 43 + 10 log (P) dB. The spectrum is scanned from 30 MHz up to a frequency including its 10th harmonic.

### 4.4.2 Test Procedures

The testing follows FCC KDB 971168 D01 v03r01 Section 5.8 and ANSI / TIA-603-E Section 2.2.12.

1. The EUT was placed on a rotatable wooden table 0.8 meters for frequency below 1GHz and 1.5 meter for frequency above 1GHz above the ground.
2. The EUT was set 3 meters from the receiving antenna, which was mounted on the antenna tower.
3. The table was rotated 360 degrees to determine the position of the highest spurious emission.
4. The height of the receiving antenna is varied between one meter and four meters to search for the maximum spurious emission for both horizontal and vertical polarizations.
5. Make the measurement with the spectrum analyzer's RBW = 1MHz, VBW = 3MHz, taking record of maximum spurious emission.
6. A horn antenna was substituted in place of the EUT and was driven by a signal generator.
7. Tune the output power of signal generator to the same emission level with EUT maximum spurious emission.
8. Taking the record of output power at antenna port.
9. Repeat step 7 to step 8 for another polarization.
10. EIRP (dBm) = S.G. Power – Tx Cable Loss + Tx Antenna Gain
11. ERP (dBm) = EIRP - 2.15
12. The RF fundamental frequency should be excluded against the limit line in the operating frequency band.
13. The limit line is derived from 43 + 10log(P) dB below the transmitter power P(Watts)

# 5 List of Measuring Equipment

| Instrument | Manufacturer | Model No. | Serial No. | Characteristics | Calibration Date | Test Date | Due Date | Remark |
|---|---|---|---|---|---|---|---|---|
| LTE Base Station | Anritsu | MT8820C | 6201432821 | GSM/GPRS /WCDMA/LTE | Oct. 13, 2017 | Oct. 10, 2018 | Oct. 12, 2018 | Conducted (TH05-HY) |
| Programmable Power Supply | GW Instek | PSS-2005 | EL890089 | 1V~20V 0.5A~5A | Jan. 12, 2018 | Oct. 10, 2018 | Jan. 11, 2019 | Conducted (TH05-HY) |
| Coupler | Warison | 1-18GHz 20 dB 25WSM A Directional Coupler | #B | 1G~18GHz | Dec. 04, 2017 | Oct. 10, 2018 | Dec. 03, 2018 | Conducted (TH05-HY) |
| Bilog Antenna | TESEQ | CBL 6111D&00800N1D01N-06 | 35419&03 | 30MHz to 1GHz | Dec. 18, 2017 | Sep. 29, 2018~ Oct. 01, 2018 | Dec. 17, 2018 | Radiation (03CH07-HY) |
| Double Ridge Horn Antenna | ESCO | 3117 | 00211469 | 1GHz ~ 18GHz | Aug. 06, 2018 | Sep. 29, 2018~ Oct. 01, 2018 | Aug. 05, 2019 | Radiation (03CH07-HY) |
| Double Ridge Horn Antenna | ESCO | 3117 | 00066583 | 1GHz ~ 18GHz | Aug. 06, 2018 | Sep. 29, 2018~ Oct. 01, 2018 | Aug. 05, 2019 | Radiation (03CH07-HY) |
| Preamplifier | MITEQ | AMF-7D-00101800-30-10P | 1590075 | 1GHz ~ 18GHz | Apr. 25, 2018 | Sep. 29, 2018~ Oct. 01, 2018 | Apr. 24, 2019 | Radiation (03CH07-HY) |
| Spectrum Analyzer | Agilent | N9010A | MY53470118 | 10Hz~44GHz | Apr. 17, 2018 | Sep. 29, 2018~ Oct. 01, 2018 | Apr. 16, 2019 | Radiation (03CH07-HY) |
| RF Cable | HUBER + SUHNER | SUCOFLEX 104 | MY28655/4, MY24971/4, MY15682/4 | 30MHz~1GHz | Feb. 27, 2018 | Sep. 29, 2018~ Oct. 01, 2018 | Feb. 26, 2019 | Radiation (03CH07-HY) |
| RF Cable | HUBER + SUHNER | SUCOFLEX 104 | MY28655/4, MY24971/4, MY15682/4 | 1GHz~18GHz | Feb. 27, 2018 | Sep. 29, 2018~ Oct. 01, 2018 | Feb. 26, 2019 | Radiation (03CH07-HY) |
| RF Cable | HUBER + SUHNER | SUCOFLEX 102 | MY2858/2 | 18GHz~40GHz | Feb. 27, 2018 | Sep. 29, 2018~ Oct. 01, 2018 | Feb. 26, 2019 | Radiation (03CH07-HY) |
| Controller | ChainTek | Chaintek 3000 | N/A | Control Turn table | N/A | Sep. 29, 2018~ Oct. 01, 2018 | N/A | Radiation (03CH07-HY) |
| Controller | Max-Full | MF7802 | MF780208368 | Control Ant Mast | N/A | Sep. 29, 2018~ Oct. 01, 2018 | N/A | Radiation (03CH07-HY) |
| Antenna Mast | Max-Full | MFA520BS | N/A | 1m~4m | N/A | Sep. 29, 2018~ Oct. 01, 2018 | N/A | Radiation (03CH07-HY) |
| Turn Table | ChainTek | Chaintek 3000 | N/A | 0~360 Degree | N/A | Sep. 29, 2018~ Oct. 01, 2018 | N/A | Radiation (03CH07-HY) |
| Amplifier | MITEQ | TTA1840-35-HG | 1871923 | 18GHz~40GHz, VSWR : 2.5:1 max | Jul. 16, 2018 | Sep. 29, 2018~ Oct. 01, 2018 | Jul. 15, 2019 | Radiation (03CH07-HY) |

| Instrument | Manufacturer | Model No. | Serial No. | Characteristics | Calibration Date | Test Date | Due Date | Remark |
|---|---|---|---|---|---|---|---|---|
| SHF-EHF Horn Antenna | SCHWARZBECK | BBHA 9170 | BBHA9170251 | 18GHz- 40GHz | Nov. 10, 2017 | Sep. 29, 2018~ Oct. 01, 2018 | Nov. 09, 2018 | Radiation (03CH07-HY) |
| EMI Test Receiver | Agilent | N9038A (MXE) | MY53290053 | 20Hz to 26.5GHz | Jan. 16, 2018 | Sep. 29, 2018~ Oct. 01, 2018 | Jan. 15, 2019 | Radiation (03CH07-HY) |
| Signal Generator | Rohde & Schwarz | SMF100A | 101107 | 100kHz~40GHz | May 22, 2018 | Sep. 29, 2018~ Oct. 01, 2018 | May 21, 2019 | Radiation (03CH07-HY) |
| Software | Audix | E3 6.2009-8-24 | 80504004656H | N/A | N/A | Sep. 29, 2018~ Oct. 01, 2018 | N/A | Radiation (03CH07-HY) |
| Filter | Microwave | H1G013G1 | SN477215 | 1.0G High Pass | Dec. 07, 2017 | Sep. 29, 2018~ Oct. 01, 2018 | Dec. 06, 2018 | Radiation (03CH07-HY) |
| Filter | Microwave | H3G018G1 | SN477220 | 3.0G High Pass | Nov. 21, 2017 | Sep. 29, 2018~ Oct. 01, 2018 | Nov. 20, 2018 | Radiation (03CH07-HY) |
| Notch Filter | Wainwright | WRCT2500/2700-10/20-10SSK | SN3 | WCDMA Band 8 | Nov. 03, 2017 | Sep. 29, 2018~ Oct. 01, 2018 | Nov. 02, 2018 | Radiation (03CH07-HY) |
| Notch Filter | Wainwright | WRCT1747.5-0.4/40-8SS | SN2 | DCS 1800 | Mar. 08, 2018 | Sep. 29, 2018~ Oct. 01, 2018 | Mar. 07, 2019 | Radiation (03CH07-HY) |
| Notch Filter | Wainwright | WTRCD10-1710-1785-20-40-40SSK | SN1 | 1710-1785 | May 22, 2018 | Sep. 29, 2018~ Oct. 01, 2018 | May 21, 2018 | Radiation (03CH07-HY) |
| Notch Filter | Wainwright | WRCG1710-1785-1690-1805-60-12SS | SN6 | AWS Band | Nov. 03, 2017 | Sep. 29, 2018~ Oct. 01, 2018 | Nov. 02, 2018 | Radiation (03CH07-HY) |

# 6 Uncertainty of Evaluation

**Uncertainty of Radiated Emission Measurement (30 MHz ~ 1000 MHz)**

| | |
|---|---|
| Measuring Uncertainty for a Level of Confidence of 95% (U = 2Uc(y)) | 5.70 |

**Uncertainty of Radiated Emission Measurement (1 GHz ~ 18 GHz)**

| | |
|---|---|
| Measuring Uncertainty for a Level of Confidence of 95% (U = 2Uc(y)) | 5.50 |

**Uncertainty of Radiated Emission Measurement (18 GHz ~ 40 GHz)**

| | |
|---|---|
| Measuring Uncertainty for a Level of Confidence of 95% (U = 2Uc(y)) | 5.20 |

# Appendix A. Test Results of Conducted Test

## Conducted Output Power(Average power)

| Conducted Power (*Unit: dBm) | | | | | | |
|---|---|---|---|---|---|---|
| Band | GSM850 | | | GSM1900 | | |
| Channel | 128 | 189 | 251 | 512 | 661 | 810 |
| Frequency | 824.2 | 836.4 | 848.8 | 1850.2 | 1880 | 1909.8 |
| GSM | 32.86 | 32.96 | 33.00 | 29.55 | 29.35 | 29.35 |
| GPRS class 8 | 32.85 | 32.95 | 32.98 | 29.54 | 29.34 | 29.33 |
| GPRS class 10 | 30.10 | 29.89 | 29.92 | 26.78 | 26.59 | 26.67 |
| GPRS class 11 | 28.05 | 27.60 | 27.93 | 24.91 | 24.87 | 24.85 |
| GPRS class 12 | 26.67 | 26.45 | 26.51 | 23.58 | 23.50 | 23.42 |
| EGPRS class 8 | 26.54 | 26.50 | 26.75 | 25.66 | 25.86 | 25.79 |
| EGPRS class 10 | 26.34 | 26.30 | 26.45 | 25.45 | 25.61 | 25.64 |
| EGPRS class 11 | 25.68 | 25.48 | 25.68 | 24.00 | 24.24 | 24.25 |
| EGPRS class 12 | 24.17 | 24.07 | 24.18 | 22.39 | 22.49 | 22.72 |

| Conducted Power (*Unit: dBm) | | | | | | |
|---|---|---|---|---|---|---|
| Band | WCDMA Band V | | | WCDMA Band II | | |
| Channel | 4132 | 4182 | 4233 | 9262 | 9400 | 9538 |
| Frequency | 826.4 | 836.4 | 846.6 | 1852.4 | 1880 | 1907.6 |
| RMC 12.2K | 23.40 | 23.37 | 23.34 | 22.89 | 22.78 | 22.99 |
| HSDPA Subtest-1 | 22.42 | 22.31 | 22.27 | 22.73 | 22.76 | 22.71 |
| HSDPA Subtest-2 | 22.45 | 22.29 | 22.26 | 22.70 | 22.64 | 22.66 |
| HSDPA Subtest-3 | 21.97 | 21.79 | 21.76 | 22.25 | 22.17 | 22.18 |
| HSDPA Subtest-4 | 21.98 | 21.80 | 21.74 | 22.21 | 22.15 | 22.21 |
| HSUPA Subtest-1 | 21.96 | 21.80 | 21.77 | 22.19 | 22.16 | 22.14 |
| HSUPA Subtest-2 | 20.47 | 20.28 | 20.26 | 20.81 | 20.62 | 20.64 |
| HSUPA Subtest-3 | 21.48 | 21.31 | 21.24 | 21.72 | 21.62 | 21.46 |
| HSUPA Subtest-4 | 20.47 | 20.29 | 20.19 | 20.72 | 20.65 | 20.49 |
| HSUPA Subtest-5 | 22.49 | 22.41 | 22.41 | 22.79 | 22.61 | 22.61 |

| Conducted Power (*Unit: dBm) | | | |
|---|---|---|---|
| Band | WCDMA Band IV | | |
| Channel | 1312 | 1413 | 1513 |
| Frequency | 1712.4 | 1732.6 | 1752.6 |
| RMC 12.2K | 22.99 | 23.06 | 23.08 |
| HSDPA Subtest-1 | 22.31 | 22.19 | 22.18 |
| HSDPA Subtest-2 | 22.29 | 22.19 | 22.11 |
| HSDPA Subtest-3 | 21.85 | 21.67 | 21.68 |
| HSDPA Subtest-4 | 21.84 | 21.67 | 21.71 |
| HSUPA Subtest-1 | 21.64 | 21.71 | 21.64 |
| HSUPA Subtest-2 | 20.44 | 20.16 | 20.14 |
| HSUPA Subtest-3 | 21.44 | 21.12 | 21.07 |
| HSUPA Subtest-4 | 19.94 | 20.15 | 19.99 |
| HSUPA Subtest-5 | 22.19 | 22.01 | 22.11 |

# Appendix B. Test Results of ERP/EIRP and Radiated Test

## ERP/EIRP

| Channel | Mode | Conducted | | ERP | |
|---|---|---|---|---|---|
| | | Power (dBm) | Power (Watts) | ERP(dBm) | ERP(W) |
| Lowest | GSM850 | 32.86 | 1.9320 | 30.71 | 1.1776 |
| Middle | GSM | 32.96 | 1.9770 | 30.81 | 1.2050 |
| Highest | (GT - LC = 0 dB) | 33.00 | 1.9953 | 30.85 | 1.2162 |
| Lowest | GSM850 | 26.54 | 0.4508 | 24.39 | 0.2748 |
| Middle | EDGE class 8 | 26.50 | 0.4467 | 24.35 | 0.2723 |
| Highest | (GT - LC = 0 dB) | 26.75 | 0.4732 | 24.60 | 0.2884 |
| Lowest | WCDMA Band V | 23.40 | 0.2188 | 21.25 | 0.1334 |
| Middle | RMC 12.2Kbps | 23.37 | 0.2173 | 21.22 | 0.1324 |
| Highest | (GT - LC = 0 dB) | 23.34 | 0.2158 | 21.19 | 0.1315 |
| Limit | ERP < 7W | Result | | PASS | |

| Channel | Mode | Conducted | | EIRP | |
|---|---|---|---|---|---|
| | | Power (dBm) | Power (Watts) | EIRP(dBm) | EIRP(W) |
| Lowest | GSM1900 | 29.55 | 0.9016 | 31.55 | 1.4289 |
| Middle | GSM | 29.35 | 0.8610 | 31.35 | 1.3646 |
| Highest | (GT - LC = 2 dB) | 29.35 | 0.8610 | 31.35 | 1.3646 |
| Lowest | GSM1900 | 25.66 | 0.3681 | 27.66 | 0.5834 |
| Middle | EDGE class 8 | 25.86 | 0.3855 | 27.86 | 0.6109 |
| Highest | (GT - LC = 2 dB) | 25.79 | 0.3793 | 27.79 | 0.6012 |
| Lowest | WCDMA Band II | 22.89 | 0.1945 | 24.89 | 0.3083 |
| Middle | RMC 12.2Kbps | 22.78 | 0.1897 | 24.78 | 0.3006 |
| Highest | (GT - LC = 2 dB) | 22.99 | 0.1991 | 24.99 | 0.3155 |
| Limit | EIRP < 2W | Result | | PASS | |

| Channel | Mode | Conducted | | EIRP | |
|---|---|---|---|---|---|
| | | Power (dBm) | Power (Watts) | EIRP(dBm) | EIRP(W) |
| Lowest | WCDMA Band IV | 22.99 | 0.1991 | 24.99 | 0.3155 |
| Middle | RMC 12.2Kbps | 23.06 | 0.2023 | 25.06 | 0.3206 |
| Highest | (GT - LC = 2 dB) | 23.08 | 0.2032 | 25.08 | 0.3221 |
| Limit | EIRP < 1W | Result | | PASS | |

# Radiated Spurious Emission

## GSM850

| GSM 850 | | | | | | | | | |
|---|---|---|---|---|---|---|---|---|---|
| Channel | Frequency ( MHz ) | ERP ( dBm ) | Limit ( dBm ) | Over Limit ( dB ) | SPA Reading (dBm) | S.G. Power ( dBm ) | TX Cable loss ( dB ) | TX Antenna Gain (dBi) | Polarization (H/V) |
| Lowest | 1648 | -48.98 | -13 | -35.98 | -64.69 | -50.74 | 0.98 | 4.89 | H |
| | 2472 | -48.70 | -13 | -35.70 | -68.4 | -50.58 | 1.28 | 5.32 | H |
| | 3296 | -53.59 | -13 | -40.59 | -71.76 | -57 | 1.54 | 7.10 | H |
| | | | | | | | | | H |
| | | | | | | | | | H |
| | | | | | | | | | H |
| | | | | | | | | | H |
| | 1648 | -51.89 | -13 | -38.89 | -64.69 | -53.65 | 0.98 | 4.89 | V |
| | 2472 | -50.43 | -13 | -37.43 | -68.4 | -52.31 | 1.28 | 5.32 | V |
| | 3296 | -51.83 | -13 | -38.83 | -71.76 | -55.24 | 1.54 | 7.10 | V |
| | | | | | | | | | V |
| | | | | | | | | | V |
| | | | | | | | | | V |
| | | | | | | | | | V |

Remark: Spurious emissions within 30-1000MHz were found more than 20dB below limit line.

# EDGE 850

| EDGE 850 | | | | | | | | | |
|---|---|---|---|---|---|---|---|---|---|
| Channel | Frequency ( MHz ) | ERP ( dBm ) | Limit ( dBm ) | Over Limit ( dB ) | SPA Reading (dBm) | S.G. Power ( dBm ) | TX Cable loss ( dB ) | TX Antenna Gain (dBi) | Polarization (H/V) |
| Lowest | 1648 | -60.82 | -13 | -47.82 | -73.15 | -62.573 | 0.98 | 4.89 | H |
| | 2472 | -51.18 | -13 | -38.18 | -68.71 | -53.06 | 1.28 | 5.32 | H |
| | 3296 | -57.96 | -13 | -44.96 | -77.56 | -61.37 | 1.54 | 7.10 | H |
| | | | | | | | | | H |
| | | | | | | | | | H |
| | | | | | | | | | H |
| | | | | | | | | | H |
| | 1648 | -62.52 | -13 | -49.52 | -75.32 | -64.28 | 0.98 | 4.89 | V |
| | 2472 | -51.56 | -13 | -38.56 | -69.53 | -53.44 | 1.28 | 5.32 | V |
| | 3296 | -57.34 | -13 | -44.34 | -77.27 | -60.75 | 1.54 | 7.10 | V |
| | | | | | | | | | V |
| | | | | | | | | | V |
| | | | | | | | | | V |
| | | | | | | | | | V |

Remark: Spurious emissions within 30-1000MHz were found more than 20dB below limit line.

# WCDMA 850

| WCDMA 850 | | | | | | | | | |
|---|---|---|---|---|---|---|---|---|---|
| Channel | Frequency ( MHz ) | ERP ( dBm ) | Limit ( dBm ) | Over Limit ( dB ) | SPA Reading (dBm) | S.G. Power ( dBm ) | TX Cable loss ( dB ) | TX Antenna Gain (dBi) | Polarization (H/V) |
| Lowest | 1656 | -63.09 | -13 | -50.09 | -75.57 | -64.82 | 0.98 | 4.86 | H |
| | 2480 | -58.64 | -13 | -45.64 | -76.17 | -60.55 | 1.28 | 5.34 | H |
| | 3304 | -57.93 | -13 | -44.93 | -77.63 | -61.37 | 1.54 | 7.14 | H |
| | | | | | | | | | H |
| | | | | | | | | | H |
| | | | | | | | | | H |
| | | | | | | | | | H |
| | 1656 | -62.65 | -13 | -49.65 | -75.6 | -64.38 | 0.98 | 4.86 | V |
| | 2480 | -58.43 | -13 | -45.43 | -76.4 | -60.34 | 1.28 | 5.34 | V |
| | 3304 | -57.45 | -13 | -44.45 | -77.43 | -60.89 | 1.54 | 7.14 | V |
| | | | | | | | | | V |
| | | | | | | | | | V |
| | | | | | | | | | V |
| | | | | | | | | | V |

Remark: Spurious emissions within 30-1000MHz were found more than 20dB below limit line.

# GSM 1900

| GSM 1900 | | | | | | | | | |
|---|---|---|---|---|---|---|---|---|---|
| Channel | Frequency ( MHz ) | EIRP ( dBm ) | Limit ( dBm ) | Over Limit ( dB ) | SPA Reading (dBm) | S.G. Power ( dBm ) | TX Cable loss ( dB ) | TX Antenna Gain (dBi) | Polarization (H/V) |
| Middle | 3762 | -54.57 | -13 | -41.57 | -75.48 | -61.2 | 1.69 | 8.31 | H |
| | 5640 | -33.80 | -13 | -20.80 | -59.3 | -40.85 | 2.71 | 9.76 | H |
| | 7518 | -52.11 | -13 | -39.11 | -79.38 | -61.5 | 2.42 | 11.81 | H |
| | | | | | | | | | H |
| | | | | | | | | | H |
| | | | | | | | | | H |
| | | | | | | | | | H |
| | 3762 | -55.06 | -13 | -42.06 | -75.99 | -61.69 | 1.69 | 8.31 | V |
| | 5640 | -33.30 | -13 | -20.30 | -58.78 | -40.35 | 2.71 | 9.76 | V |
| | 7518 | -51.61 | -13 | -38.61 | -79.12 | -61 | 2.42 | 11.81 | V |
| | | | | | | | | | V |
| | | | | | | | | | V |
| | | | | | | | | | V |
| | | | | | | | | | V |

Remark: Spurious emissions within 30-1000MHz were found more than 20dB below limit line.

# EDGE1900

| EDGE 1900 | | | | | | | | | |
|---|---|---|---|---|---|---|---|---|---|
| Channel | Frequency ( MHz ) | EIRP ( dBm ) | Limit ( dBm ) | Over Limit ( dB ) | SPA Reading (dBm) | S.G. Power ( dBm ) | TX Cable loss ( dB ) | TX Antenna Gain (dBi) | Polarization (H/V) |
| Middle | 3762 | -50.94 | -13 | -37.94 | -71.85 | -57.57 | 1.69 | 8.31 | H |
| | 5640 | -42.07 | -13 | -29.07 | -67.57 | -49.12 | 2.71 | 9.76 | H |
| | 7520 | -51.93 | -13 | -38.93 | -79.2 | -61.32 | 2.42 | 11.81 | H |
| | | | | | | | | | H |
| | | | | | | | | | H |
| | | | | | | | | | H |
| | | | | | | | | | H |
| | 3762 | -51.79 | -13 | -38.79 | -72.72 | -58.42 | 1.69 | 8.31 | V |
| | 5640 | -40.20 | -13 | -27.20 | -65.68 | -47.25 | 2.71 | 9.76 | V |
| | 7520 | -51.69 | -13 | -38.69 | -79.2 | -61.08 | 2.42 | 11.81 | V |
| | | | | | | | | | V |
| | | | | | | | | | V |
| | | | | | | | | | V |
| | | | | | | | | | V |

Remark: Spurious emissions within 30-1000MHz were found more than 20dB below limit line.

# WCDMA 1900

| WCDMA 1900 | | | | | | | | | |
|---|---|---|---|---|---|---|---|---|---|
| Channel | Frequency ( MHz ) | EIRP ( dBm ) | Limit ( dBm ) | Over Limit ( dB ) | SPA Reading (dBm) | S.G. Power ( dBm ) | TX Cable loss ( dB ) | TX Antenna Gain (dBi) | Polarization (H/V) |
| Highest | 3816 | -58.13 | -13 | -45.13 | -78.98 | -64.81 | 1.70 | 8.38 | H |
| | 5724 | -52.83 | -13 | -39.83 | -78.54 | -59.87 | 2.75 | 9.79 | H |
| | 7632 | -49.89 | -13 | -36.89 | -77.48 | -59.38 | 2.39 | 11.88 | H |
| | | | | | | | | | H |
| | | | | | | | | | H |
| | | | | | | | | | H |
| | | | | | | | | | H |
| | 3816 | -57.87 | -13 | -44.87 | -78.79 | -64.55 | 1.70 | 8.38 | V |
| | 5724 | -52.45 | -13 | -39.45 | -78.15 | -59.49 | 2.75 | 9.79 | V |
| | 7632 | -49.47 | -13 | -36.47 | -77.32 | -58.96 | 2.39 | 11.88 | V |
| | | | | | | | | | V |
| | | | | | | | | | V |
| | | | | | | | | | V |
| | | | | | | | | | V |

Remark: Spurious emissions within 30-1000MHz were found more than 20dB below limit line.

# WCDMA 1700

| WCDMA 1700 | | | | | | | | | |
|---|---|---|---|---|---|---|---|---|---|
| Channel | Frequency ( MHz ) | EIRP ( dBm ) | Limit ( dBm ) | Over Limit ( dB ) | SPA Reading (dBm) | S.G. Power ( dBm ) | TX Cable loss ( dB ) | TX Antenna Gain (dBi) | Polarization (H/V) |
| Lowest | 3426 | -56.73 | -13 | -43.73 | -77.61 | -62.82 | 1.58 | 7.67 | H |
| | 5136 | -54.07 | -13 | -41.07 | -78.25 | -61.35 | 2.42 | 9.70 | H |
| | 6852 | -51.75 | -13 | -38.75 | -78.58 | -59.73 | 2.64 | 10.62 | H |
| | | | | | | | | | H |
| | | | | | | | | | H |
| | | | | | | | | | H |
| | | | | | | | | | H |
| | 3426 | -56.94 | -13 | -43.94 | -77.79 | -63.03 | 1.58 | 7.67 | V |
| | 5136 | -54.24 | -13 | -41.24 | -78.4 | -61.52 | 2.42 | 9.70 | V |
| | 6852 | -52.05 | -13 | -39.05 | -78.85 | -60.03 | 2.64 | 10.62 | V |
| | | | | | | | | | V |
| | | | | | | | | | V |
| | | | | | | | | | V |
| | | | | | | | | | V |
| Middle | 3468 | -56.66 | -13 | -43.66 | -77.62 | -62.92 | 1.59 | 7.86 | H |
| | 5196 | -49.53 | -13 | -36.53 | -73.93 | -56.78 | 2.45 | 9.70 | H |
| | 6930 | -51.09 | -13 | -38.09 | -78.01 | -59.19 | 2.61 | 10.72 | H |
| | | | | | | | | | H |
| | | | | | | | | | H |
| | | | | | | | | | H |
| | | | | | | | | | H |
| | 3468 | -56.88 | -13 | -43.88 | -77.86 | -63.14 | 1.59 | 7.86 | V |
| | 5196 | -53.61 | -13 | -40.61 | -77.96 | -60.86 | 2.45 | 9.70 | V |
| | 6930 | -51.67 | -13 | -38.67 | -78.69 | -59.77 | 2.61 | 10.72 | V |
| | | | | | | | | | V |
| | | | | | | | | | V |
| | | | | | | | | | V |
| | | | | | | | | | V |

| | | | | | | | | | |
|---|---|---|---|---|---|---|---|---|---|
| Highest | 3504 | -56.49 | -13 | -43.49 | -77.61 | -62.89 | 1.61 | 8.00 | H |
| | 5256 | -53.56 | -13 | -40.56 | -78.07 | -60.78 | 2.48 | 9.70 | H |
| | 7008 | -51.05 | -13 | -38.05 | -78.07 | -59.28 | 2.59 | 10.82 | H |
| | | | | | | | | | H |
| | | | | | | | | | H |
| | | | | | | | | | H |
| | | | | | | | | | H |
| | 3504 | -56.96 | -13 | -43.96 | -77.96 | -63.36 | 1.61 | 8.00 | V |
| | 5256 | -54.25 | -13 | -41.25 | -78.56 | -61.47 | 2.48 | 9.70 | V |
| | 7008 | -51.74 | -13 | -38.74 | -78.65 | -59.97 | 2.59 | 10.82 | V |
| | | | | | | | | | V |
| | | | | | | | | | V |
| | | | | | | | | | V |
| | | | | | | | | | V |

Remark: Spurious emissions within 30-1000MHz were found more than 20dB below limit line.

———THE END———