FCC RADIO TEST REPORT

FCC ID	:	**IHDT56XP4**
Equipment	:	**Mobile Cellular Phone**
Brand Name	:	**Motorola**
Model Name	:	**XT1962-6**
Applicant	:	**Motorola Mobility LLC** **222 W,Merchandise Mart Plaza, Chicago IL 60654 USA**
Manufacturer	:	**Motorola Mobility LLC** **222 W,Merchandise Mart Plaza, Chicago IL 60654 USA**
Standard	:	**47 CFR Part 2, 22(H), 24(E), 27**

The product was received on Sep. 08, 2018 and testing was started from Sep. 29, 2018 and completed on Oct. 10, 2018. We, SPORTON INTERNATIONAL INC., would like to declare that the tested sample has been evaluated in accordance with the test procedures given in ANSI / TIA-603-E and has been in compliance with the applicable technical standards.

The report must not be used by the client to claim product certification, approval, or endorsement by TAF or any agency of government.

The test results in this variant report apply exclusively to the tested model / sample. Without written approval of SPORTON INTERNATIONAL INC. EMC & Wireless Communications Laboratory, the test report shall not be reproduced except in full.

Approved by: Joseph Lin

SPORTON INTERNATIONAL INC. EMC & Wireless Communications Laboratory
No. 52, Huaya 1st Rd., Guishan Dist., Taoyuan City, Taiwan (R.O.C.)

Table of Contents

History of this test report **3**
Summary of Test Result **4**
1 General Description **5**
1.1 Product Feature of Equipment Under Test 5
1.2 Product Specification of Equipment Under Test 7
1.3 Modification of EUT 7
1.4 Emission Designator 8
1.5 Testing Location 10
1.6 Applicable Standards 10
2 Test Configuration of Equipment Under Test **11**
2.1 Test Mode 11
2.2 Connection Diagram of Test System 12
2.3 Support Unit used in test configuration and system 12
2.4 Frequency List of Low/Middle/High Channels 13
3 Conducted Test Items **16**
3.1 Measuring Instruments 16
3.2 Conducted Output Power and ERP/EIRP 17
4 Radiated Test Items **18**
4.1 Measuring Instruments 18
4.2 Radiated Spurious Emission 19
5 List of Measuring Equipment **20**
6 Uncertainty of Evaluation **22**
Appendix A. Test Results of Conducted Test
Appendix B. Test Results of ERP/EIRP and Radiated Test

History of this test report

Report No.	Version	Description	Issued Date
FG890804-04B	01	Initial issue of report	Oct. 30, 2018

Summary of Test Result

Report Clause	Ref Std. Clause	Test Items	Result (PASS/FAIL)	Remark
3.2	§2.1046	Conducted Output Power	Reporting only	-
	§22.913 (a)(2)	Effective Radiated Power (Band 5) (Band 26)	Pass	
	§24.232 (c) §27.50 (h)(2)	Equivalent Isotropic Radiated Power (Band 2) (Band 7) (Band 38) (Band 41)		
	§27.50 (d)(4)	Equivalent Isotropic Radiated Power (Band 4)		
-	§24.232 (d) §27.50 (d)(5)	Peak-to-Average Ratio	Not Required	-
-	§2.1049	Occupied Bandwidth	Not Required	-
-	§2.1051 §22.917 (a) §24.238 (a) §27.53 (h)	Conducted Band Edge Measurement (Band 2) (Band 4) (Band 5) (Band 26)	Not Required	-
	§2.1051 §27.53 (m)(4)	Conducted Band Edge Measurement (Band 7) (Band 38) (Band 41)		
-	§2.1051 §22.917 (a) §24.238 (a) §27.53 (h)	Conducted Spurious Emission (Band 2) (Band 4) (Band 5) (Band 26)	Not Required	-
	§2.1051 §27.53 (m)(4)	Conducted Spurious Emission (Band 7) (Band 38) (Band 41)		
-	§2.1055 §22.355 §24.235 §27.54	Frequency Stability Temperature & Voltage	Not Required	-
4.2	§2.1053 §22.917 (a) §24.238 (a) §27.53 (h)	Radiated Spurious Emission (Band 2) (Band 4) (Band 5) (Band 26)	Pass	Under limit 8.84 dB at 7806.000 MHz
	§2.1053 §27.53 (m)(4)	Radiated Spurious Emission (Band 7) (Band 38) (Band 41)		

Remark:

1. Not required means after assessing, test items are not necessary to carry out.
2. This is a variant report. All the test cases were performed on original report which can be referred to Sporton Report Number FG890804B and FG890804-02B.

Reviewed by: Wii Chang

Report Producer: Natasha Hsieh

1 General Description

1.1 Product Feature of Equipment Under Test

Product Feature		
Equipment	Mobile Cellular Phone	
Brand Name	Motorola	
Model Name	XT1962-6	
FCC ID	IHDT56XP4	
IMEI Code	**Conducted :**	IMEI1:355579090011036 IMEI2:355579090011044
	Radiation :	IMEI1: 355579090014212 IMEI2: 355579090014220
EUT supports Radios application	GSM/EGPRS/WCDMA/HSPA/LTE/GNSS/FM WLAN 11b/g/n HT20 WLAN 11a/n HT20/HT40 Bluetooth BR/EDR/LE	
HW Version	DVT1B	
EUT Stage	Identical Prototype	

Remark: The above EUT's information was declared by manufacturer.

Accessory List		
AC Adapter 1	Brand Name :	Motorola
	Model Name :	SC-51
	Manufacturer :	Salom
AC Adapter 1	Brand Name :	Motorola
	Model Name :	SC-52
	Manufacturer :	Salom
AC Adapter 1	Brand Name :	Motorola
	Model Name :	SC-53
	Manufacturer :	Salom
AC Adapter 1	Brand Name :	Motorola
	Model Name :	SC-55
	Manufacturer :	Salom
AC Adapter 1 (IN)	Brand Name :	Motorola
	Model Name :	SC-55
	Manufacturer :	Salom
AC Adapter 1 (IN Local Build)	Brand Name :	Motorola
	Model Name :	SC-54
	Manufacturer :	Flex
AC Adapter 2	Brand Name :	Motorola
	Model Name :	SC-51
	Manufacturer :	Chenyang
AC Adapter 2	Brand Name :	Motorola
	Model Name :	SC-52
	Manufacturer :	Chenyang
AC Adapter 2	Brand Name :	Motorola
	Model Name :	SC-53
	Manufacturer :	Chenyang
AC Adapter 2	Brand Name :	Motorola
	Model Name :	SC-55
	Manufacturer :	Chenyang
AC Adapter 2 (IN Local Build)	Brand Name :	Motorola
	Model Name :	SC-54
	Manufacturer :	Chenyang
Battery	Brand Name :	Motorola
	Model Name :	JG30
	Manufacturer :	Amperex
Earphone	Brand Name :	Motorola
	Model Name :	SH38C37773
	Manufacturer :	Lyand
USB Cable 1	Brand Name :	Cabletech
	Model Name :	SKN6473A
USB Cable 2	Brand Name :	Saibao
	Model Name :	SKN6473A
USB Cable 3	Brand Name :	Luxshare
	Model Name :	SKN6473A

1.2 Product Specification of Equipment Under Test

Standards-related Product Specification	
Tx Frequency	LTE Band 2: 1850.7 MHz ~ 1909.3 MHz LTE Band 4: 1710.7 MHz ~ 1754.3 MHz LTE Band 5: 824.7 MHz ~ 848.3 MHz LTE Band 7: 2502.5 MHz ~ 2567.5 MHz LTE Band 26 : 824.7MHz ~ 848.3 MHz LTE Band 38 : 2572.5MHz ~ 2617.5MHz LTE Band 41 : 2498.5 MHz ~ 2687.5 MHz
Rx Frequency	LTE Band 2: 1930.7 MHz ~ 1989.3 MHz LTE Band 4: 2110.7 MHz ~ 2154.3 MHz LTE Band 5: 869.7 MHz ~ 893.3 MHz LTE Band 7: 2622.5 MHz ~ 2687.5 MHz LTE Band 26 : 869.7MHz ~ 893.3MHz LTE Band 38 : 2572.5MHz ~ 2617.5MHz LTE Band 41 : 2498.5 MHz ~ 2687.5 MHz
Bandwidth	LTE Band 2: 1.4MHz / 3MHz / 5MHz / 10MHz / 15MHz / 20MHz LTE Band 4: 1.4MHz / 3MHz / 5MHz / 10MHz / 15MHz / 20MHz LTE Band 5: 1.4MHz / 3MHz / 5MHz / 10MHz LTE Band 7: 5MHz / 10MHz / 15MHz / 20MHz LTE Band 26 : 1.4MHz / 3MHz / 5MHz / 10MHz / 15MHz LTE Band 38 : 5MHz / 10MHz / 15MHz / 20MHz LTE Band 41 : 5MHz / 10MHz / 15MHz / 20MHz
Maximum Output Power to Antenna	LTE Band 2: 22.58 dBm LTE Band 4: 22.91 dBm LTE Band 5: 23.20 dBm LTE Band 7: 23.09 dBm LTE Band 26: 23.26 dBm LTE Band 38: 23.10 dBm LTE Band 41: 23.95 dBm
Antenna Type	Fixed Internal Antenna and Dipole Antenna
Antenna Gain	LTE Band 2: 2.0 dBi LTE Band 4: 2.0 dBi LTE Band 5: 0.0 dBi LTE Band 7: 3.0 dBi LTE Band 26: 0.0 dBi LTE Band 38: 3.0 dBi LTE Band 41: 3.0 dBi
Type of Modulation	QPSK / 16QAM

1.3 Modification of EUT

No modifications are made to the EUT during all test items.

1.4 Emission Designator

LTE Band 2		QPSK			16QAM		
BW (MHz)	Frequency Range (MHz)	Emission Designator (99%OBW)	Frequency Tolerance (ppm)	Maximum EIRP(W)	Emission Designator (99%OBW)	Frequency Tolerance (ppm)	Maximum EIRP(W)
1.4	1850.7 ~ 1909.3	-	-	0.2799	-	-	0.2649
3	1851.5 ~ 1908.5	-	-	0.2780	-	-	0.2710
5	1852.5 ~ 1907.5	-	-	0.2767	-	-	0.2679
10	1855.0 ~ 1905.0	-	-	0.2761	-	-	0.2612
15	1857.5 ~ 1902.5	-	-	0.2799	-	-	0.2673
20	1860.0 ~ 1900.0	-	-	0.2871	-	-	0.2723
LTE Band 4		QPSK			16QAM		
BW (MHz)	Frequency Range (MHz)	Emission Designator (99%OBW)	Frequency Tolerance (ppm)	Maximum EIRP(W)	Emission Designator (99%OBW)	Frequency Tolerance (ppm)	Maximum EIRP(W)
1.4	1710.7 ~ 1754.3	-	-	0.3069	-	-	0.2965
3	1711.5 ~ 1753.5	-	-	0.2877	-	-	0.2965
5	1712.5 ~ 1752.5	-	-	0.3041	-	-	0.3034
10	1715.0 ~ 1750.0	-	-	0.2931	-	-	0.3020
15	1717.5 ~ 1747.5	-	-	0.2985	-	-	0.3076
20	1720.0 ~ 1745.0	-	-	0.3097	-	-	0.2897
LTE Band 5		QPSK			16QAM		
BW (MHz)	Frequency Range (MHz)	Emission Designator (99%OBW)	Frequency Tolerance (ppm)	Maximum ERP(W)	Emission Designator (99%OBW)	Frequency Tolerance (ppm)	Maximum ERP(W)
1.4	824.7 ~ 848.3	-	-	0.1295	-	-	0.1064
3	825.5 ~ 847.5	-	-	0.1262	-	-	0.1059
5	826.5 ~ 846.5	-	-	0.1253	-	-	0.1069
10	829.0 ~ 844.0	-	-	0.1274	-	-	0.1033
LTE Band 7		QPSK			16QAM		
BW (MHz)	Frequency Range (MHz)	Emission Designator (99%OBW)	Frequency Tolerance (ppm)	Maximum EIRP(W)	Emission Designator (99%OBW)	Frequency Tolerance (ppm)	Maximum EIRP(W)
5	2502.5 ~ 2567.5	-	-	0.4064	-	-	0.3420
10	2505.0 ~ 2565.0	-	-	0.3899	-	-	0.3381
15	2507.5 ~ 2562.5	-	-	0.3926	-	-	0.3428
20	2510.0 ~ 2560.0	-	-	0.3945	-	-	0.3221

LTE Band 26		QPSK			16QAM		
BW (MHz)	Frequency Range (MHz)	Emission Designator (99%OBW)	Frequency Tolerance (ppm)	Maximum ERP(W)	Emission Designator (99%OBW)	Frequency Tolerance (ppm)	Maximum ERP(W)
1.4	824.7~848.3	-	-	0.1216	-	-	0.1159
3	825.5~847.5	-	-	0.1250	-	-	0.1057
5	826.5~846.5	-	-	0.1250	-	-	0.1054
10	829.0~844.0	-	-	0.1276	-	-	0.1076
15	831.5~841.5			0.1291			0.1102
LTE Band 38		**QPSK**			**16QAM**		
BW (MHz)	Frequency Range (MHz)	Emission Designator (99%OBW)	Frequency Tolerance (ppm)	Maximum ERP(W)	Emission Designator (99%OBW)	Frequency Tolerance (ppm)	Maximum ERP(W)
5	2572.5~2617.5	-	-	0.3864	-	-	0.3273
10	2575.0~2615.0	-	-	0.3954	-	-	0.3263
15	2577.5~2612.5			0.4018			0.3304
20	2580.0~2610.0			0.4074			0.3342
LTE Band 41		**QPSK**			**16QAM**		
BW (MHz)	Frequency Range (MHz)	Emission Designator (99%OBW)	Frequency Tolerance (ppm)	Maximum EIRP(W)	Emission Designator (99%OBW)	Frequency Tolerance (ppm)	Maximum EIRP(W)
5	2498.5~2687.5	-	-	0.4955	-	-	0.3162
10	2501.0~2685.0	-	-	0.5105	-	-	0.3273
15	2503.5~2682.5	-	-	0.5152	-	-	0.3565
20	2506.0~2680.0	-	-	0.5152	-	-	0.3273

1.5 Testing Location

Sporton Lab is accredited to ISO 17025 by Taiwan Accreditation Foundation (TAF code : 1190) and the FCC designation No. TW1190 under the FCC 2.948(e) by Mutual Recognition Agreement (MRA) in FCC Test.

Test Site	SPORTON INTERNATIONAL INC.	
Test Site Location	No.52, Huaya 1st Rd., Guishan Dist., Taoyuan City, Taiwan (R.O.C.) TEL: +886-3-327-3456 FAX: +886-3-328-4978	
Test Site No.	**Sporton Site No.**	
	TH05-HY	03CH07-HY

Note: The test site complies with ANSI C63.4 2014 requirement.

1.6 Applicable Standards

According to the specifications of the manufacturer, the EUT must comply with the requirements of the following standards:

- ANSI C63.26-2015
- ANSI / TIA-603-E
- 47 CFR Part 2, 22(H), 24(E), 27
- FCC KDB 971168 D01 Power Meas. License Digital Systems v03r01
- FCC KDB 412172 D01 Determining ERP and EIRP v01r01

Remark:

1. All test items were verified and recorded according to the standards and without any deviation during the test.
2. This EUT has also been tested and complied with the requirements of FCC Part 15, Subpart B, recorded in a separate test report.

2 Test Configuration of Equipment Under Test

2.1 Test Mode

Antenna port conducted and radiated test items listed below are performed according to KDB 971168 D01 Power Meas. License Digital Systems v03r01 with maximum output power.

For radiated measurement, pre-scanned in three orthogonal panels, X, Y, Z. The worst cases (X plane for Band 26 and 41, Z plan for Band 2, 4, 5, 7, and 38) were recorded in this report.

Test Items	Band	Bandwidth (MHz)						Modulation			RB #			Test Channel		
		1.4	3	5	10	15	20	QPSK	16QAM	64QAM	1	Half	Full	L	M	H
Max. Output Power	2	v	v	v	v	v	v	v	v	v	v	v	v	v	v	v
	4	v	v	v	v	v	v	v	v	v	v	v	v	v	v	v
	5	v	v	v	v	-	-	v	v	v	v	v	v	v	v	v
	7	-	-	v	v	v	v	v	v	v	v	v	v	v	v	v
	26	v	v	v	v	v	-	v	v	v	v	v	v	v	v	v
	38	-	-	v	v	v	v	v	v	v	v	v	v	v	v	v
	41	-	-	v	v	v	v	v	v	v	v	v	v	v	v	v
E.R.P / E.I.R.P	2	v	v	v	v	v	v	v	v	v	v			v	v	v
	4	v	v	v	v	v	v	v	v	v	v			v	v	v
	5	v	v	v	v	-	-	v	v	v	v			v	v	v
	7	-	-	v	v	v	v	v	v	v	v			v	v	v
	26	v	v	v	v	v	-	v	v	v	v			v	v	v
	38	-	-	v	v	v	v	v	v	v	v			v	v	v
	41	-	-	v	v	v	v	v	v	v	v			v	v	v
Radiated Spurious Emission	2	Worst Case														v
	4	Worst Case												v	v	v
	5	Worst Case												v		
	7	Worst Case												v		
	26	Worst Case														v
	38	Worst Case													v	
	41	Worst Case														v
Remark	1. The mark "**v** " means that this configuration is chosen for testing 2. The mark "-" means that this bandwidth is not supported. 3. The device is investigated from 30MHz to 10 times of fundamental signal for radiated spurious emission test under different RB size/offset and modulations in exploratory test. Subsequently, only the worst case emissions are reported. 4. All the radiated test cases were performed with Adapter 1 and USB Cable 1 Type C.															

2.2 Connection Diagram of Test System

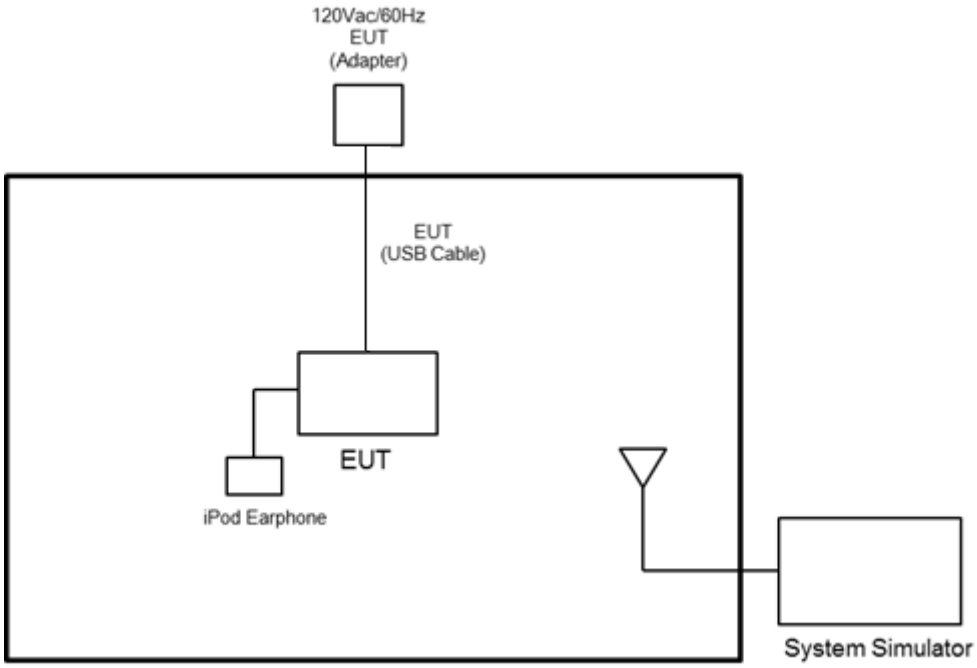

2.3 Support Unit used in test configuration and system

Item	Equipment	Trade Name	Model No.	FCC ID	Data Cable	Power Cord
1.	LTE Base Station	Anritsu	MT8820C	N/A	N/A	Unshielded, 1.8 m
2.	System Simulator	R&S	CMU 200	N/A	N/A	Unshielded, 1.8 m

2.4 Frequency List of Low/Middle/High Channels

LTE Band 2 Channel and Frequency List				
BW [MHz]	**Channel/Frequency(MHz)**	**Lowest**	**Middle**	**Highest**
20	Channel	18700	18900	19100
	Frequency	1860	1880	1900
15	Channel	18675	18900	19125
	Frequency	1857.5	1880	1902.5
10	Channel	18650	18900	19150
	Frequency	1855	1880	1905
5	Channel	18625	18900	19175
	Frequency	1852.5	1880	1907.5
3	Channel	18615	18900	19185
	Frequency	1851.5	1880	1908.5
1.4	Channel	18607	18900	19193
	Frequency	1850.7	1880	1909.3

LTE Band 4 Channel and Frequency List				
BW [MHz]	**Channel/Frequency(MHz)**	**Lowest**	**Middle**	**Highest**
20	Channel	20050	20175	20300
	Frequency	1720	1732.5	1745
15	Channel	20025	20175	20325
	Frequency	1717.5	1732.5	1747.5
10	Channel	20000	20175	20350
	Frequency	1715	1732.5	1750
5	Channel	19975	20175	20375
	Frequency	1712.5	1732.5	1752.5
3	Channel	19965	20175	20385
	Frequency	1711.5	1732.5	1753.5
1.4	Channel	19957	20175	20393
	Frequency	1710.7	1732.5	1754.3

LTE Band 5 Channel and Frequency List				
BW [MHz]	Channel/Frequency(MHz)	Lowest	Middle	Highest
10	Channel	20450	20525	20600
	Frequency	829	836.5	844
5	Channel	20425	20525	20625
	Frequency	826.5	836.5	846.5
3	Channel	20415	20525	20635
	Frequency	825.5	836.5	847.5
1.4	Channel	20407	20525	20643
	Frequency	824.7	836.5	848.3

LTE Band 7 Channel and Frequency List				
BW [MHz]	Channel/Frequency(MHz)	Lowest	Middle	Highest
20	Channel	20850	21100	21350
	Frequency	2510	2535	2560
15	Channel	20825	21100	21375
	Frequency	2507.5	2535	2562.5
10	Channel	20800	21100	21400
	Frequency	2505	2535	2565
5	Channel	20775	21100	21425
	Frequency	2502.5	2535	2567.5

LTE Band 26 Channel and Frequency List				
BW [MHz]	Channel/Frequency(MHz)	Lowest	Middle	Highest
15	Channel	26865	26915	26965
	Frequency	831.5	836.5	841.5
10	Channel	26840	26915	26990
	Frequency	829.0	836.5	844.0
5	Channel	26815	26915	27015
	Frequency	826.5	836.5	846.5
3	Channel	26805	26915	27025
	Frequency	825.5	836.5	847.5
1.4	Channel	26797	26915	27033
	Frequency	824.7	836.5	848.3

LTE Band 38 Channel and Frequency List				
BW [MHz]	Channel/Frequency(MHz)	Lowest	Middle	Highest
20	Channel	37850	38000	38150
	Frequency	2580.0	2595.0	2610.0
15	Channel	37825	38000	38175
	Frequency	2577.5	2595.0	2612.5
10	Channel	37800	38000	38200
	Frequency	2575.0	2595.0	2615.0
5	Channel	37775	38000	38225
	Frequency	2572.5	2595.0	2617.5

LTE Band 41 2535MHz ~ 2655MHz Channel and Frequency List				
BW [MHz]	Channel/Frequency(MHz)	Lowest	Middle	Highest
20	Channel	40140	40640	41140
	Frequency	2545.0	2595.0	2645.0
15	Channel	40115	40640	41165
	Frequency	2542.5	2595.0	2647.5
10	Channel	40090	40640	41190
	Frequency	2540.0	2595.0	2650.0
5	Channel	40065	40640	41215
	Frequency	2537.5	2595.0	2652.5

3 Conducted Test Items

3.1 Measuring Instruments

See list of measuring instruments of this test report.

3.1.1 Test Setup

3.1.2 Conducted Output Power

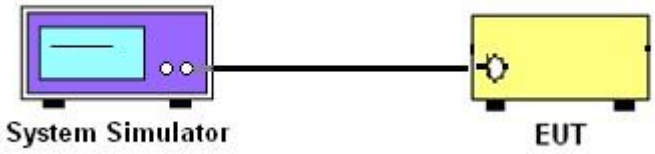

3.1.3 Test Result of Conducted Test

Please refer to Appendix A.

3.2 Conducted Output Power and ERP/EIRP

3.2.1 Description of the Conducted Output Power Measurement and ERP/EIRP Measurement

A system simulator was used to establish communication with the EUT. Its parameters were set to force the EUT transmitting at maximum output power. The measured power in the radio frequency on the transmitter output terminals shall be reported.

The ERP of mobile transmitters must not exceed 7 Watts for LTE Band 5 and Band 26.

The EIRP of mobile transmitters must not exceed 2 Watts for LTE Band 2 and Band 7 and Band 38 and Band 41.

The EIRP of mobile transmitters must not exceed 1 Watts for LTE Band 4.

According to KDB 412172 D01 Power Approach,

EIRP = $P_T + G_T – L_C$, ERP = EIRP -2.15, where

P_T = transmitter output power in dBm

G_T = gain of the transmitting antenna in dBi

L_C = signal attenuation in the connecting cable between the transmitter and antenna in dB

3.2.2 Test Procedures

1. The transmitter output port was connected to the system simulator.
2. Set EUT at maximum power through the system simulator.
3. Select lowest, middle, and highest channels for each band and different modulation.
4. Measure and record the power level from the system simulator.

4 Radiated Test Items

4.1 Measuring Instruments

See list of measuring instruments of this test report.

4.1.1 Test Setup

For radiated test from 30MHz to 1GHz

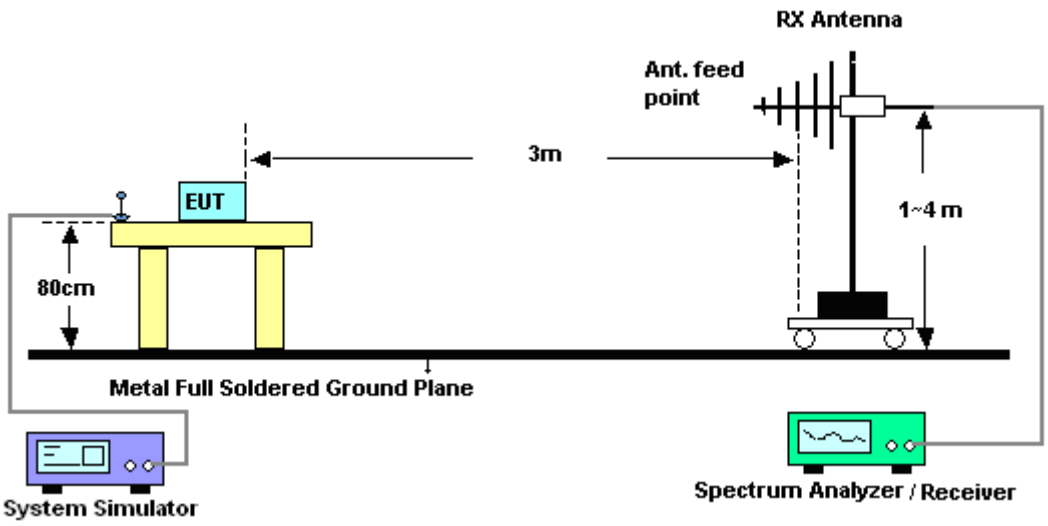

For radiated test above 1GHz

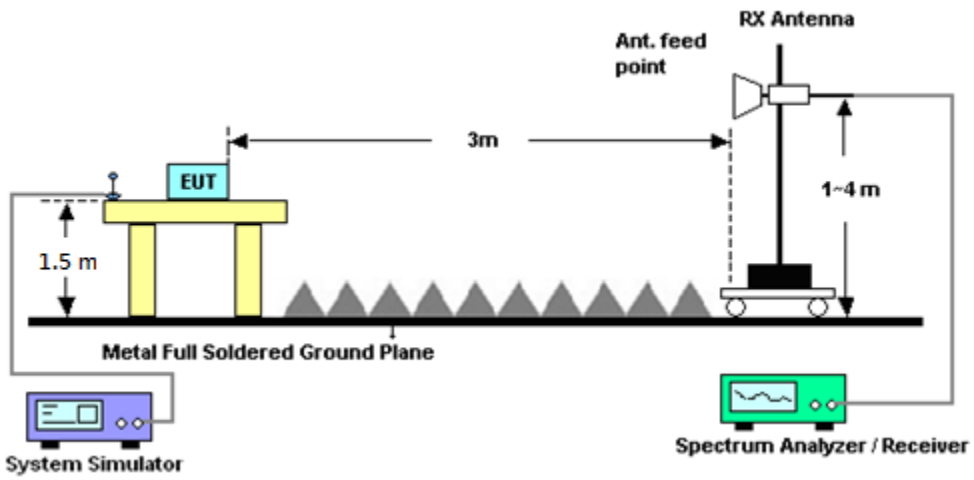

4.1.2 Test Result of Radiated Test

Please refer to Appendix B.

4.2 Radiated Spurious Emission

4.2.1 Description of Radiated Spurious Emission

The radiated spurious emission was measured by substitution method according to ANSI / TIA-603-E. The power of any emission outside of the authorized operating frequency ranges must be attenuated below the transmitter power (P) by a factor of at least 43 + 10 log (P) dB.

For Band 7

The power of any emission outside of the authorized operating frequency ranges must be attenuated below the transmitter power (P) by a factor of at least 55 + 10 log (P) dB.

The spectrum is scanned from 30 MHz up to a frequency including its 10th harmonic.

4.2.2 Test Procedures

The testing follows FCC KDB 971168 D01 v03r01 Section 5.8 and ANSI / TIA-603-E Section 2.2.12.

1. The EUT was placed on a turntable with 0.8 meter for frequency below 1GHz and 1.5 meter for frequency above 1GHz respectively above ground.
2. The EUT was set 3 meters from the receiving antenna, which was mounted on the antenna tower.
3. The table was rotated 360 degrees to determine the position of the highest spurious emission.
4. The height of the receiving antenna is varied between one meter and four meters to search the maximum spurious emission for both horizontal and vertical polarizations.
5. Make the measurement with the spectrum analyzer's RBW = 1MHz, VBW = 3MHz, taking the record of maximum spurious emission.
6. A horn antenna was substituted in place of the EUT and was driven by a signal generator.
7. Tune the output power of signal generator to the same emission level with EUT maximum spurious emission.
8. Taking the record of output power at antenna port.
9. Repeat step 7 to step 8 for another polarization.
10. The RF fundamental frequency should be excluded against the limit line in the operating frequency band.
    The limit line is derived from 43 + 10log(P)dB below the transmitter power P(Watts)
11. For Band 7, 38, 41:
    The limit line is derived from 55 + 10log(P)dB below the transmitter power P(Watts)
    EIRP (dBm) = S.G. Power – Tx Cable Loss + Tx Antenna Gain
    ERP (dBm) = EIRP - 2.15

5 List of Measuring Equipment

Instrument	Manufacturer	Model No.	Serial No.	Characteristics	Calibration Date	Test Date	Due Date	Remark
LTE Base Station	Anritsu	MT8820C	6201432821	GSM/GPRS /WCDMA/LTE	Oct. 13, 2017	Oct. 10, 2018	Oct. 12, 2018	Conducted (TH05-HY)
Programmable Power Supply	GW Instek	PSS-2005	EL890089	1V~20V 0.5A~5A	Jan. 12, 2018	Oct. 10, 2018	Jan. 11, 2019	Conducted (TH05-HY)
Coupler	Warison	1-18GHz 20 dB 25WSM A Directional Coupler	#B	1G~18GHz	Dec. 04, 2017	Oct. 10, 2018	Dec. 03, 2018	Conducted (TH05-HY)
Bilog Antenna	TESEQ	CBL 6111D&00800N1D01N-06	35419&03	30MHz to 1GHz	Dec. 18, 2017	Sep. 29, 2018~ Oct. 01, 2018	Dec. 17, 2018	Radiation (03CH07-HY)
Double Ridge Horn Antenna	ESCO	3117	00211469	1GHz ~ 18GHz	Aug. 06, 2018	Sep. 29, 2018~ Oct. 01, 2018	Aug. 05, 2019	Radiation (03CH07-HY)
Double Ridge Horn Antenna	ESCO	3117	00066583	1GHz ~ 18GHz	Aug. 06, 2018	Sep. 29, 2018~ Oct. 01, 2018	Aug. 05, 2019	Radiation (03CH07-HY)
Preamplifier	MITEQ	AMF-7D-00101800-30-10P	1590075	1GHz ~ 18GHz	Apr. 25, 2018	Sep. 29, 2018~ Oct. 01, 2018	Apr. 24, 2019	Radiation (03CH07-HY)
Spectrum Analyzer	Agilent	N9010A	MY53470118	10Hz~44GHz	Apr. 17, 2018	Sep. 29, 2018~ Oct. 01, 2018	Apr. 16, 2019	Radiation (03CH07-HY)
RF Cable	HUBER + SUHNER	SUCOFLEX 104	MY28655/4, MY24971/4, MY15682/4	30MHz~1GHz	Feb. 27, 2018	Sep. 29, 2018~ Oct. 01, 2018	Feb. 26, 2019	Radiation (03CH07-HY)
RF Cable	HUBER + SUHNER	SUCOFLEX 104	MY28655/4, MY24971/4, MY15682/4	1GHz~18GHz	Feb. 27, 2018	Sep. 29, 2018~ Oct. 01, 2018	Feb. 26, 2019	Radiation (03CH07-HY)
RF Cable	HUBER + SUHNER	SUCOFLEX 102	MY2858/2	18GHz~40GHz	Feb. 27, 2018	Sep. 29, 2018~ Oct. 01, 2018	Feb. 26, 2019	Radiation (03CH07-HY)
Controller	ChainTek	Chaintek 3000	N/A	Control Turn table	N/A	Sep. 29, 2018~ Oct. 01, 2018	N/A	Radiation (03CH07-HY)
Controller	Max-Full	MF7802	MF780208368	Control Ant Mast	N/A	Sep. 29, 2018~ Oct. 01, 2018	N/A	Radiation (03CH07-HY)
Antenna Mast	Max-Full	MFA520BS	N/A	1m~4m	N/A	Sep. 29, 2018~ Oct. 01, 2018	N/A	Radiation (03CH07-HY)
Turn Table	ChainTek	Chaintek 3000	N/A	0~360 Degree	N/A	Sep. 29, 2018~ Oct. 01, 2018	N/A	Radiation (03CH07-HY)
Amplifier	MITEQ	TTA1840-35-HG	1871923	18GHz~40GHz, VSWR : 2.5:1 max	Jul. 16, 2018	Sep. 29, 2018~ Oct. 01, 2018	Jul. 15, 2019	Radiation (03CH07-HY)

Instrument	Manufacturer	Model No.	Serial No.	Characteristics	Calibration Date	Test Date	Due Date	Remark
SHF-EHF Horn Antenna	SCHWARZBECK	BBHA 9170	BBHA9170251	18GHz- 40GHz	Nov. 10, 2017	Sep. 29, 2018~ Oct. 01, 2018	Nov. 09, 2018	Radiation (03CH07-HY)
EMI Test Receiver	Agilent	N9038A (MXE)	MY53290053	20Hz to 26.5GHz	Jan. 16, 2018	Sep. 29, 2018~ Oct. 01, 2018	Jan. 15, 2019	Radiation (03CH07-HY)
Signal Generator	Rohde & Schwarz	SMF100A	101107	100kHz~40GHz	May 22, 2018	Sep. 29, 2018~ Oct. 01, 2018	May 21, 2019	Radiation (03CH07-HY)
Software	Audix	E3 6.2009-8-24	80504004656H	N/A	N/A	Sep. 29, 2018~ Oct. 01, 2018	N/A	Radiation (03CH07-HY)
Filter	Microwave	H1G013G1	SN477215	1.0G High Pass	Dec. 07, 2017	Sep. 29, 2018~ Oct. 01, 2018	Dec. 06, 2018	Radiation (03CH07-HY)
Filter	Microwave	H3G018G1	SN477220	3.0G High Pass	Nov. 21, 2017	Sep. 29, 2018~ Oct. 01, 2018	Nov. 20, 2018	Radiation (03CH07-HY)
Notch Filter	Wainwright	WRCT2500/2700-10/20-10SSK	SN3	WCDMA Band 8	Nov. 03, 2017	Sep. 29, 2018~ Oct. 01, 2018	Nov. 02, 2018	Radiation (03CH07-HY)
Notch Filter	Wainwright	WRCT1747.5-0.4/40-8SS	SN2	DCS 1800	Mar. 08, 2018	Sep. 29, 2018~ Oct. 01, 2018	Mar. 07, 2019	Radiation (03CH07-HY)
Notch Filter	Wainwright	WTRCD10-1710-1785-20-40-40SSK	SN1	1710-1785	May 22, 2018	Sep. 29, 2018~ Oct. 01, 2018	May 21, 2018	Radiation (03CH07-HY)
Notch Filter	Wainwright	WRCG1710-1785-1690-1805-60-12SS	SN6	AWS Band	Nov. 03, 2017	Sep. 29, 2018~ Oct. 01, 2018	Nov. 02, 2018	Radiation (03CH07-HY)

6 Uncertainty of Evaluation

Uncertainty of Radiated Emission Measurement (30 MHz ~ 1000 MHz)

Measuring Uncertainty for a Level of Confidence of 95% (U = 2Uc(y))	5.70

Uncertainty of Radiated Emission Measurement (1 GHz ~ 18 GHz)

Measuring Uncertainty for a Level of Confidence of 95% (U = 2Uc(y))	5.50

Uncertainty of Radiated Emission Measurement (18 GHz ~ 40 GHz)

Measuring Uncertainty for a Level of Confidence of 95% (U = 2Uc(y))	5.20

Appendix A. Test Results of Conducted Test

Conducted Output Power(Average power)

LTE Band 2 Maximum Average Power [dBm]						
BW [MHz]	RB Size	RB Offset	Mod	Lowest	Middle	Highest
20	1	0	QPSK	22.58	22.36	22.29
20	1	49		22.33	22.26	22.42
20	1	99		22.40	22.37	22.26
20	50	0		22.21	21.98	21.86
20	50	24		21.92	21.87	21.82
20	50	50		21.87	21.86	21.86
20	100	0		21.99	21.86	21.95
20	1	0	16-QAM	22.25	22.35	22.32
20	1	49		22.05	22.07	22.17
20	1	99		22.23	22.11	21.96
20	50	0		21.03	20.96	20.89
20	50	24		20.94	20.89	20.79
20	50	50		20.93	20.88	20.87
20	100	0		21.01	20.94	20.89
15	1	0	QPSK	22.47	22.38	22.41
15	1	37		22.13	22.05	22.04
15	1	74		22.34	22.31	22.23
15	36	0		22.17	22.04	22.03
15	36	20		21.84	21.78	21.73
15	36	39		21.78	21.76	21.66
15	75	0		21.97	21.90	21.89
15	1	0	16-QAM	22.21	22.27	22.14
15	1	37		21.91	22.01	21.89
15	1	74		22.16	22.07	22.08
15	36	0		21.18	21.08	21.01
15	36	20		20.83	20.78	20.76
15	36	39		20.74	20.74	20.64
15	75	0		20.97	20.90	20.91

LTE Band 2 Maximum Average Power [dBm]						
BW [MHz]	RB Size	RB Offset	Mod	Lowest	Middle	Highest
10	1	0	QPSK	22.36	22.37	22.21
10	1	25		22.41	22.37	22.22
10	1	49		22.26	22.41	22.26
10	25	0		22.05	22.01	21.93
10	25	12		22.08	21.96	21.94
10	25	25		21.86	21.78	21.77
10	50	0		21.94	21.86	21.82
10	1	0	16-QAM	22.09	22.13	22.12
10	1	25		22.17	22.12	22.09
10	1	49		21.77	21.67	21.65
10	25	0		21.04	20.96	20.92
10	25	12		21.08	20.96	20.90
10	25	25		20.92	20.79	20.73
10	50	0		21.00	20.90	20.81
5	1	0	QPSK	22.27	22.24	22.28
5	1	12		22.39	22.33	22.26
5	1	24		22.42	22.30	22.26
5	12	0		22.07	22.00	21.95
5	12	7		22.02	21.90	21.88
5	12	13		22.00	21.83	21.87
5	25	0		22.05	21.92	21.87
5	1	0	16-QAM	22.28	22.26	22.21
5	1	12		22.15	22.09	22.03
5	1	24		22.20	22.09	22.02
5	12	0		21.04	21.03	20.94
5	12	7		21.06	20.99	20.95
5	12	13		21.03	20.90	20.88
5	25	0		20.99	20.89	20.87

LTE Band 2 Maximum Average Power [dBm]						
BW [MHz]	RB Size	RB Offset	Mod	Lowest	Middle	Highest
3	1	0	QPSK	22.41	22.36	22.24
3	1	8		22.44	22.30	22.30
3	1	14		22.40	22.31	22.24
3	8	0		22.05	21.94	21.88
3	8	4		22.02	21.90	21.89
3	8	7		21.99	21.85	21.86
3	15	0		21.97	21.91	21.84
3	1	0	16-QAM	22.33	22.16	22.13
3	1	8		22.30	22.11	22.11
3	1	14		22.24	22.10	22.10
3	8	0		21.05	20.99	20.95
3	8	4		21.07	21.02	20.94
3	8	7		21.05	20.89	20.91
3	15	0		21.07	20.96	20.87
1.4	1	0	QPSK	22.37	22.35	22.35
1.4	1	3		22.41	22.25	22.35
1.4	1	5		22.34	22.27	22.23
1.4	3	0		22.47	22.21	22.30
1.4	3	1		22.37	22.24	22.28
1.4	3	3		22.35	22.21	22.24
1.4	6	0		21.92	21.81	21.86
1.4	1	0	16-QAM	22.23	21.98	22.12
1.4	1	3		22.23	22.01	22.11
1.4	1	5		22.17	21.95	22.04
1.4	3	0		21.89	21.76	21.81
1.4	3	1		21.92	21.80	21.84
1.4	3	3		21.86	21.75	21.83
1.4	6	0		21.10	20.87	20.91

LTE Band 4 Maximum Average Power [dBm]						
BW [MHz]	RB Size	RB Offset	Mod	Lowest	Middle	Highest
20	1	0	QPSK	22.85	22.90	22.84
20	1	49		22.68	22.56	22.67
20	1	99		22.56	22.69	**22.91**
20	50	0		22.02	21.69	21.85
20	50	24		21.87	21.64	21.96
20	50	50		21.73	21.67	22.06
20	100	0		21.87	21.81	22.07
20	1	0	16-QAM	22.38	22.05	21.97
20	1	49		22.06	21.77	22.22
20	1	99		21.89	22.06	22.62
20	50	0		20.99	20.69	20.85
20	50	24		20.85	20.69	20.98
20	50	50		20.75	20.72	21.07
20	100	0		20.91	20.72	20.90
15	1	0	QPSK	22.75	22.32	22.41
15	1	37		22.62	22.34	22.70
15	1	74		22.53	22.59	22.75
15	36	0		22.54	22.14	22.35
15	36	20		22.15	21.86	22.22
15	36	39		21.97	21.83	22.25
15	75	0		22.23	21.98	22.25
15	1	0	16-QAM	22.23	22.81	22.78
15	1	37		22.14	22.13	22.23
15	1	74		22.30	22.34	22.88
15	36	0		21.47	21.28	21.36
15	36	20		21.14	20.85	21.18
15	36	39		20.93	20.81	21.28
15	75	0		21.21	20.98	21.32

LTE Band 4 Maximum Average Power [dBm]						
BW [MHz]	RB Size	RB Offset	Mod	Lowest	Middle	Highest
10	1	0	QPSK	22.67	22.24	22.33
10	1	25		22.54	22.26	22.62
10	1	49		22.45	22.51	22.67
10	25	0		22.46	22.06	22.27
10	25	12		22.07	21.78	22.14
10	25	25		21.89	21.75	22.17
10	50	0		22.15	21.90	22.17
10	1	0	16-QAM	22.15	22.73	22.70
10	1	25		22.06	22.05	22.15
10	1	49		22.22	22.26	22.80
10	25	0		21.39	21.10	21.28
10	25	12		21.06	20.77	21.10
10	25	25		20.85	20.73	21.20
10	50	0		21.13	20.90	21.24
5	1	0	QPSK	22.51	22.61	22.44
5	1	12		22.60	22.25	22.83
5	1	24		22.56	22.34	22.82
5	12	0		22.23	21.78	22.41
5	12	7		22.15	21.79	22.43
5	12	13		22.06	21.83	22.39
5	25	0		22.17	21.81	22.44
5	1	0	16-QAM	22.61	22.15	22.68
5	1	12		22.24	21.91	22.53
5	1	24		22.27	22.08	22.82
5	12	0		21.25	20.80	21.44
5	12	7		21.20	20.80	21.41
5	12	13		21.14	20.82	21.46
5	25	0		21.14	20.81	21.42

LTE Band 4 Maximum Average Power [dBm]						
BW [MHz]	RB Size	RB Offset	Mod	Lowest	Middle	Highest
3	1	0	QPSK	22.59	22.16	22.25
3	1	8		22.46	22.18	22.54
3	1	14		22.37	22.43	22.59
3	8	0		22.38	21.98	22.19
3	8	4		21.99	21.70	22.06
3	8	7		21.81	21.67	22.09
3	15	0		22.07	21.82	22.09
3	1	0	16-QAM	22.07	22.65	22.62
3	1	8		21.98	21.97	22.07
3	1	14		22.14	22.18	22.72
3	8	0		21.31	21.02	21.20
3	8	4		20.98	20.69	21.02
3	8	7		20.77	20.65	21.12
3	15	0		21.05	20.82	21.16
1.4	1	0	QPSK	22.66	22.19	22.15
1.4	1	3		22.79	22.36	22.87
1.4	1	5		22.56	22.21	22.86
1.4	3	0		22.63	22.24	22.45
1.4	3	1		22.64	22.28	22.69
1.4	3	3		22.65	22.28	22.70
1.4	6	0		22.14	21.75	22.41
1.4	1	0	16-QAM	22.44	22.05	22.69
1.4	1	3		22.46	22.14	22.72
1.4	1	5		22.37	22.06	22.69
1.4	3	0		22.17	21.77	22.45
1.4	3	1		22.18	21.79	22.48
1.4	3	3		22.19	21.78	22.48
1.4	6	0		21.17	20.81	21.47

LTE Band 5 Maximum Average Power [dBm]						
BW [MHz]	RB Size	RB Offset	Mod	Lowest	Middle	Highest
10	1	0	QPSK	22.99	22.87	23.09
10	1	25		**23.20**	23.11	22.92
10	1	49		22.68	22.61	22.64
10	25	0		22.06	22.03	21.86
10	25	12		22.17	22.10	21.98
10	25	25		22.02	21.98	21.86
10	50	0		22.08	21.97	21.89
10	1	0	16-QAM	22.01	21.88	21.91
10	1	25		22.29	22.27	22.13
10	1	49		21.93	21.72	21.62
10	25	0		21.07	21.01	20.83
10	25	12		21.14	21.13	20.95
10	25	25		21.02	20.96	20.85
10	50	0		21.04	21.00	20.84
5	1	0	QPSK	22.70	22.69	22.94
5	1	12		23.13	23.06	22.86
5	1	24		23.12	23.06	22.89
5	12	0		22.22	22.14	21.96
5	12	7		22.20	22.15	21.95
5	12	13		22.17	22.11	21.93
5	25	0		22.22	22.14	21.96
5	1	0	16-QAM	22.44	22.39	22.17
5	1	12		22.23	22.24	22.01
5	1	24		22.34	22.31	22.11
5	12	0		21.20	21.21	21.02
5	12	7		21.19	21.16	21.02
5	12	13		21.20	21.15	21.00
5	25	0		21.16	21.11	21.00

LTE Band 5 Maximum Average Power [dBm]						
BW [MHz]	RB Size	RB Offset	Mod	Lowest	Middle	Highest
3	1	0	QPSK	22.77	22.80	22.80
3	1	8		23.16	23.07	22.93
3	1	14		23.13	23.01	22.86
3	8	0		22.20	22.10	21.93
3	8	4		22.19	22.13	21.95
3	8	7		22.20	22.10	21.94
3	15	0		22.18	22.10	21.95
3	1	0	16-QAM	22.34	22.27	22.16
3	1	8		22.40	22.33	22.16
3	1	14		22.35	22.28	22.05
3	8	0		21.25	21.19	21.02
3	8	4		21.26	21.23	20.99
3	8	7		21.23	21.22	20.99
3	15	0		21.17	21.10	20.95
1.4	1	0	QPSK	23.11	23.04	23.07
1.4	1	3		23.06	23.09	22.92
1.4	1	5		23.02	23.05	22.86
1.4	3	0		23.11	23.07	22.85
1.4	3	1		23.03	23.07	22.88
1.4	3	3		23.15	23.07	22.86
1.4	6	0		22.14	22.11	21.95
1.4	1	0	16-QAM	22.39	22.24	22.11
1.4	1	3		22.42	22.37	22.18
1.4	1	5		22.32	22.31	22.07
1.4	3	0		22.14	22.08	21.93
1.4	3	1		22.20	22.18	22.01
1.4	3	3		22.07	22.12	21.90
1.4	6	0		21.01	21.16	20.97

LTE Band 7 Maximum Average Power [dBm]						
BW [MHz]	RB Size	RB Offset	Mod	Lowest	Middle	Highest
20	1	0	QPSK	22.96	22.83	22.75
20	1	49		22.60	22.52	22.66
20	1	99		22.70	22.72	22.63
20	50	0		21.89	21.75	21.68
20	50	24		21.64	21.59	21.61
20	50	50		21.71	21.61	21.60
20	100	0		21.71	21.67	21.61
20	1	0	16-QAM	21.97	21.92	22.08
20	1	49		21.86	21.77	21.91
20	1	99		21.95	22.02	22.07
20	50	0		20.68	20.66	20.68
20	50	24		20.61	20.61	20.72
20	50	50		20.75	20.75	20.84
20	100	0		20.68	20.61	20.72
15	1	0	QPSK	22.87	22.61	22.68
15	1	37		22.58	22.47	22.66
15	1	74		22.74	22.87	22.94
15	36	0		21.91	21.76	21.91
15	36	20		21.77	21.63	21.85
15	36	39		21.69	21.73	21.83
15	75	0		21.79	21.73	21.90
15	1	0	16-QAM	22.29	22.28	22.35
15	1	37		21.83	21.75	21.90
15	1	74		22.09	22.06	22.13
15	36	0		20.89	20.78	20.92
15	36	20		20.78	20.67	20.81
15	36	39		20.65	20.71	20.78
15	75	0		20.83	20.77	20.91

LTE Band 7 Maximum Average Power [dBm]						
BW [MHz]	RB Size	RB Offset	Mod	Lowest	Middle	Highest
10	1	0	QPSK	22.84	22.77	22.88
10	1	25		22.91	22.77	22.77
10	1	49		22.66	22.55	22.60
10	25	0		22.05	21.94	21.93
10	25	12		22.11	22.01	22.09
10	25	25		21.99	21.86	21.94
10	50	0		22.00	21.94	21.96
10	1	0	16-QAM	21.96	21.92	22.02
10	1	25		22.26	22.17	22.29
10	1	49		21.89	21.80	21.87
10	25	0		21.10	20.98	20.94
10	25	12		21.17	21.00	21.07
10	25	25		20.99	20.83	20.98
10	50	0		21.08	20.89	20.94
5	1	0	QPSK	22.93	22.87	22.90
5	1	12		22.91	22.79	**23.09**
5	1	24		22.70	22.96	22.99
5	12	0		22.16	22.06	22.08
5	12	7		22.11	22.04	22.11
5	12	13		22.13	21.99	22.07
5	25	0		22.13	22.03	22.08
5	1	0	16-QAM	22.29	22.23	22.34
5	1	12		22.25	22.18	22.24
5	1	24		22.25	22.23	22.21
5	12	0		21.14	21.07	21.11
5	12	7		21.18	21.06	21.13
5	12	13		21.13	21.01	21.10
5	25	0		21.12	21.03	21.09

LTE Band 26 Maximum Average Power [dBm]						
BW [MHz]	RB Size	RB Offset	Mod	Lowest	Middle	Highest
15	1	0	QPSK	23.05	22.92	22.99
15	1	37		**23.26**	22.95	23.04
15	1	74		23.08	22.94	22.86
15	36	0		22.28	22.12	22.03
15	36	20		22.26	22.09	21.94
15	36	39		22.11	22.01	21.90
15	75	0		22.26	22.09	22.02
15	1	0	16-QAM	22.57	22.52	22.32
15	1	37		22.41	22.25	22.06
15	1	74		22.36	22.30	22.16
15	36	0		21.24	21.17	21.04
15	36	20		21.23	21.07	20.96
15	36	39		21.10	20.99	20.89
15	75	0		21.22	21.08	21.03
10	1	0	QPSK	22.92	22.85	23.08
10	1	25		23.21	23.07	22.91
10	1	49		22.72	22.92	22.83
10	25	0		22.15	22.03	21.88
10	25	12		22.23	22.12	21.98
10	25	25		22.05	21.91	21.84
10	50	0		22.11	21.95	21.86
10	1	0	16-QAM	22.04	21.97	21.99
10	1	25		22.47	22.29	22.20
10	1	49		21.98	21.77	21.94
10	25	0		21.16	21.02	20.85
10	25	12		21.26	21.12	20.94
10	25	25		21.08	20.92	20.78
10	50	0		21.11	20.95	20.82

LTE Band 26 Maximum Average Power [dBm]						
BW [MHz]	RB Size	RB Offset	Mod	Lowest	Middle	Highest
5	1	0	QPSK	22.87	22.96	22.77
5	1	12		23.11	22.94	22.79
5	1	24		23.12	22.87	22.75
5	12	0		22.25	22.07	21.97
5	12	7		22.24	22.04	21.94
5	12	13		22.21	22.00	21.91
5	25	0		22.24	22.02	21.94
5	1	0	16-QAM	22.38	22.28	22.18
5	1	12		22.32	22.18	22.04
5	1	24		22.38	22.20	22.02
5	12	0		21.25	21.13	21.00
5	12	7		21.26	21.11	21.00
5	12	13		21.25	21.09	20.97
5	25	0		21.19	21.03	20.86
3	1	0	QPSK	22.95	23.00	22.86
3	1	8		23.12	22.79	22.95
3	1	14		23.05	22.90	22.82
3	8	0		22.17	22.00	21.92
3	8	4		22.19	22.00	21.94
3	8	7		22.16	21.97	21.90
3	15	0		22.17	21.98	21.92
3	1	0	16-QAM	22.39	22.23	22.07
3	1	8		22.38	22.18	22.12
3	1	14		22.32	22.14	22.04
3	8	0		21.29	21.13	21.03
3	8	4		21.28	21.14	21.06
3	8	7		21.31	21.09	21.03
3	15	0		21.21	21.00	20.90

LTE Band 26 Maximum Average Power [dBm]						
BW [MHz]	RB Size	RB Offset	Mod	Lowest	Middle	Highest
1.4	1	0	QPSK	22.87	22.66	22.62
1.4	1	3		23.00	22.79	22.77
1.4	1	5		22.92	22.65	22.60
1.4	3	0		22.89	22.72	22.68
1.4	3	1		22.91	22.74	22.65
1.4	3	3		22.85	22.67	22.56
1.4	6	0		22.31	22.22	22.19
1.4	1	0	16-QAM	22.79	22.54	22.50
1.4	1	3		22.79	22.59	22.56
1.4	1	5		22.71	22.51	22.50
1.4	3	0		22.30	22.23	22.26
1.4	3	1		22.37	22.34	22.33
1.4	3	3		22.33	22.19	22.17
1.4	6	0		21.49	21.27	21.13

LTE Band 38 Maximum Average Power [dBm]						
BW [MHz]	RB Size	RB Offset	Mod	Lowest	Middle	Highest
20	1	0	QPSK	22.70	22.82	**23.10**
20	1	49		22.79	22.70	22.50
20	1	99		22.95	22.76	22.67
20	50	0		21.94	21.82	21.64
20	50	24		21.93	21.84	21.61
20	50	50		22.02	21.84	21.62
20	100	0		22.06	21.84	21.65
20	1	0	16-QAM	22.24	22.15	22.08
20	1	49		22.11	21.99	21.81
20	1	99		22.19	22.01	21.92
20	50	0		20.96	20.86	20.63
20	50	24		20.95	20.87	20.66
20	50	50		21.06	20.87	20.64
20	100	0		21.07	20.86	20.68
15	1	0	QPSK	22.83	22.71	22.58
15	1	37		22.92	22.79	22.48
15	1	74		23.04	22.97	22.77
15	36	0		22.13	22.04	21.79
15	36	20		22.04	21.86	21.56
15	36	39		21.91	21.78	21.63
15	75	0		22.11	21.91	21.67
15	1	0	16-QAM	21.58	21.52	21.89
15	1	37		21.95	21.73	21.42
15	1	74		22.19	22.09	21.95
15	36	0		21.15	21.09	20.82
15	36	20		20.99	20.84	20.61
15	36	39		20.88	20.76	20.62
15	75	0		21.17	20.98	20.65

LTE Band 38 Maximum Average Power [dBm]						
BW [MHz]	RB Size	RB Offset	Mod	Lowest	Middle	Highest
10	1	0	QPSK	22.96	22.85	22.75
10	1	25		22.82	22.59	22.45
10	1	49		22.42	22.20	22.08
10	25	0		21.83	21.70	21.47
10	25	12		21.91	21.77	21.59
10	25	25		21.73	21.49	21.41
10	50	0		21.79	21.66	21.49
10	1	0	16-QAM	21.92	21.81	21.65
10	1	25		22.10	21.96	21.74
10	1	49		21.71	21.52	21.41
10	25	0		20.88	20.71	20.53
10	25	12		20.98	20.78	20.59
10	25	25		20.75	20.55	20.46
10	50	0		20.85	20.66	20.49
5	1	0	QPSK	22.78	22.87	22.65
5	1	12		22.79	22.60	22.47
5	1	24		22.79	22.53	22.42
5	12	0		21.88	21.77	21.61
5	12	7		21.92	21.74	21.57
5	12	13		21.89	21.74	21.57
5	25	0		21.90	21.71	21.54
5	1	0	16-QAM	22.15	21.99	21.80
5	1	12		22.15	21.98	21.82
5	1	24		22.10	21.83	21.77
5	12	0		20.96	20.81	20.67
5	12	7		20.95	20.82	20.64
5	12	13		20.94	20.80	20.61
5	25	0		20.92	20.78	20.57

LTE Band 41 Maximum Average Power [dBm]						
BW [MHz]	RB Size	RB Offset	Mod	Lowest	Middle	Highest
20	1	0	QPSK	**24.12**	23.76	23.79
20	1	49		23.90	23.83	23.47
20	1	99		24.00	23.95	23.54
20	50	0		21.82	21.86	21.71
20	50	24		21.79	21.74	21.76
20	50	50		21.83	21.75	21.70
20	100	0		21.81	21.80	21.76
20	1	0	16-QAM	22.15	21.99	21.86
20	1	49		22.02	21.76	21.71
20	1	99		22.10	22.00	21.77
20	50	0		20.87	20.76	20.80
20	50	24		20.86	20.78	20.76
20	50	50		20.85	20.79	20.74
20	100	0		20.84	20.84	20.89
15	1	0	QPSK	23.57	23.79	23.70
15	1	37		**24.12**	23.78	23.60
15	1	74		**24.12**	24.00	23.78
15	36	0		22.00	21.88	21.75
15	36	20		21.79	21.79	21.73
15	36	39		21.85	21.78	21.79
15	75	0		21.97	21.86	21.71
15	1	0	16-QAM	22.50	22.52	22.11
15	1	37		21.76	21.89	22.06
15	1	74		22.19	22.14	21.81
15	36	0		21.01	20.94	20.74
15	36	20		20.83	20.78	20.78
15	36	39		20.85	20.77	20.75
15	75	0		20.97	20.69	20.73

LTE Band 41 Maximum Average Power [dBm]						
BW [MHz]	RB Size	RB Offset	Mod	Lowest	Middle	Highest
10	1	0	QPSK	23.72	23.86	23.59
10	1	25		23.88	24.08	23.68
10	1	49		23.52	23.77	23.70
10	25	0		21.78	21.79	21.78
10	25	12		21.75	21.76	21.71
10	25	25		21.74	21.76	21.79
10	50	0		21.72	21.84	21.76
10	1	0	16-QAM	21.75	21.77	21.80
10	1	25		21.98	22.15	21.77
10	1	49		21.78	21.79	21.80
10	25	0		20.81	20.84	20.76
10	25	12		20.80	20.98	20.75
10	25	25		20.78	20.79	20.70
10	50	0		20.72	20.91	20.74
5	1	0	QPSK	23.83	23.81	23.85
5	1	12		23.84	23.95	23.55
5	1	24		23.85	23.76	23.60
5	12	0		21.75	21.73	21.75
5	12	7		21.73	21.59	21.76
5	12	13		21.74	21.72	21.76
5	25	0		21.75	21.73	21.70
5	1	0	16-QAM	22.00	21.89	21.81
5	1	12		21.93	21.91	21.80
5	1	24		21.91	21.89	21.78
5	12	0		20.86	20.76	20.70
5	12	7		20.82	20.80	20.78
5	12	13		20.79	20.77	20.75
5	25	0		20.79	20.77	20.70

Appendix B. Test Results of ERP/EIRP and Radiated Test

ERP/EIRP

LTE Band 2 / 1.4MHz (Average) (GT - LC = 2 dB)							
Channel	Mode	RB		Conducted		EIRP	
		Size	Offset	Power (dBm)	Power (Watts)	EIRP(dBm)	EIRP(W)
Lowest	QPSK	3	0	22.47	0.1766	24.47	0.2799
Middle		3	0	22.21	0.1663	24.21	0.2636
Highest		3	0	22.30	0.1698	24.30	0.2692
Lowest	16QAM	1	0	22.23	0.1671	24.23	0.2649
Middle		1	0	21.98	0.1578	23.98	0.2500
Highest		1	0	22.12	0.1629	24.12	0.2582
Limit	EIRP < 2W			Result		PASS	

LTE Band 2 / 3MHz (Average) (GT - LC = 2 dB)							
Channel	Mode	RB		Conducted		EIRP	
		Size	Offset	Power (dBm)	Power (Watts)	EIRP(dBm)	EIRP(W)
Lowest	QPSK	1	8	22.44	0.1754	24.44	0.2780
Middle		1	8	22.30	0.1698	24.30	0.2692
Highest		1	8	22.30	0.1698	24.30	0.2692
Lowest	16QAM	1	0	22.33	0.1710	24.33	0.2710
Middle		1	0	22.16	0.1644	24.16	0.2606
Highest		1	0	22.13	0.1633	24.13	0.2588
Limit	EIRP < 2W			Result		PASS	

LTE Band 2 / 5MHz (Average) (GT - LC = 2 dB)							
Channel	Mode	RB		Conducted		EIRP	
		Size	Offset	Power (dBm)	Power (Watts)	EIRP(dBm)	EIRP(W)
Lowest	QPSK	1	24	22.42	0.1746	24.42	0.2767
Middle		1	24	22.30	0.1698	24.30	0.2692
Highest		1	24	22.26	0.1683	24.26	0.2667
Lowest	16QAM	1	0	22.28	0.1690	24.28	0.2679
Middle		1	0	22.26	0.1683	24.26	0.2667
Highest		1	0	22.21	0.1663	24.21	0.2636
Limit	EIRP < 2W			Result		PASS	

LTE Band 2 / 10MHz (Average) (GT - LC = 2 dB)							
Channel	Mode	RB		Conducted		EIRP	
		Size	Offset	Power (dBm)	Power (Watts)	EIRP(dBm)	EIRP(W)
Lowest	QPSK	1	25	22.41	0.1742	24.41	0.2761
Middle		1	25	22.37	0.1726	24.37	0.2735
Highest		1	25	22.22	0.1667	24.22	0.2642
Lowest	16QAM	1	25	22.17	0.1648	24.17	0.2612
Middle		1	25	22.12	0.1629	24.12	0.2582
Highest		1	25	22.09	0.1618	24.09	0.2564
Limit	EIRP < 2W			Result		PASS	

LTE Band 2 / 15MHz (Average) (GT - LC = 2 dB)							
Channel	Mode	RB		Conducted		EIRP	
		Size	Offset	Power (dBm)	Power (Watts)	EIRP(dBm)	EIRP(W)
Lowest	QPSK	1	0	22.47	0.1766	24.47	0.2799
Middle		1	0	22.38	0.1730	24.38	0.2742
Highest		1	0	22.41	0.1742	24.41	0.2761
Lowest	16QAM	1	0	22.21	0.1663	24.21	0.2636
Middle		1	0	22.27	0.1687	24.27	0.2673
Highest		1	0	22.14	0.1637	24.14	0.2594
Limit	EIRP < 2W			Result		PASS	

LTE Band 2 / 20MHz (Average) (GT - LC = 2 dB)							
Channel	Mode	RB		Conducted		EIRP	
		Size	Offset	Power (dBm)	Power (Watts)	EIRP(dBm)	EIRP(W)
Lowest	QPSK	1	0	22.58	0.1811	24.58	0.2871
Middle		1	0	22.36	0.1722	24.36	0.2729
Highest		1	0	22.29	0.1694	24.29	0.2685
Lowest	16QAM	1	0	22.25	0.1679	24.25	0.2661
Middle		1	0	22.35	0.1718	24.35	0.2723
Highest		1	0	22.32	0.1706	24.32	0.2704
Limit	EIRP < 2W			Result		PASS	

LTE Band 4 / 1.4MHz (Average) (GT - LC = 2 dB)							
Channel	Mode	RB		Conducted		EIRP	
		Size	Offset	Power (dBm)	Power (Watts)	EIRP(dBm)	EIRP(W)
Lowest	QPSK	1	3	22.79	0.1901	24.79	0.3013
Middle		1	3	22.36	0.1722	24.36	0.2729
Highest		1	3	22.87	0.1936	24.87	0.3069
Lowest	16QAM	1	3	22.46	0.1762	24.46	0.2793
Middle		1	3	22.14	0.1637	24.14	0.2594
Highest		1	3	22.72	0.1871	24.72	0.2965
Limit	EIRP < 1W			Result		PASS	

LTE Band 4 / 3MHz (Average) (GT - LC = 2 dB)							
Channel	Mode	RB		Conducted		EIRP	
		Size	Offset	Power (dBm)	Power (Watts)	EIRP(dBm)	EIRP(W)
Lowest	QPSK	1	0	22.59	0.1816	24.59	0.2877
Middle		1	0	22.16	0.1644	24.16	0.2606
Highest		1	0	22.25	0.1679	24.25	0.2661
Lowest	16QAM	1	14	22.14	0.1637	24.14	0.2594
Middle		1	14	22.18	0.1652	24.18	0.2618
Highest		1	14	22.72	0.1871	24.72	0.2965
Limit	EIRP < 1W			Result		PASS	

LTE Band 4 / 5MHz (Average) (GT - LC = 2 dB)							
Channel	Mode	RB		Conducted		EIRP	
		Size	Offset	Power (dBm)	Power (Watts)	EIRP(dBm)	EIRP(W)
Lowest	QPSK	1	12	22.60	0.1820	24.60	0.2884
Middle		1	12	22.25	0.1679	24.25	0.2661
Highest		1	12	22.83	0.1919	24.83	0.3041
Lowest	16QAM	1	24	22.27	0.1687	24.27	0.2673
Middle		1	24	22.08	0.1614	24.08	0.2559
Highest		1	24	22.82	0.1914	24.82	0.3034
Limit	EIRP < 1W			Result		PASS	

LTE Band 4 / 10MHz (Average) (GT - LC = 2 dB)							
Channel	Mode	RB		Conducted		EIRP	
		Size	Offset	Power (dBm)	Power (Watts)	EIRP(dBm)	EIRP(W)
Lowest	QPSK	1	0	22.67	0.1849	24.67	0.2931
Middle		1	0	22.24	0.1675	24.24	0.2655
Highest		1	0	22.33	0.1710	24.33	0.2710
Lowest	16QAM	1	49	22.22	0.1667	24.22	0.2642
Middle		1	49	22.26	0.1683	24.26	0.2667
Highest		1	49	22.80	0.1905	24.80	0.3020
Limit	EIRP < 1W			Result		PASS	

LTE Band 4 / 15MHz (Average) (GT - LC = 2 dB)							
Channel	Mode	RB		Conducted		EIRP	
		Size	Offset	Power (dBm)	Power (Watts)	EIRP(dBm)	EIRP(W)
Lowest	QPSK	1	0	22.75	0.1884	24.75	0.2985
Middle		1	0	22.32	0.1706	24.32	0.2704
Highest		1	0	22.41	0.1742	24.41	0.2761
Lowest	16QAM	1	74	22.30	0.1698	24.30	0.2692
Middle		1	74	22.34	0.1714	24.34	0.2716
Highest		1	74	22.88	0.1941	24.88	0.3076
Limit	EIRP < 1W			Result		PASS	

LTE Band 4 / 20MHz (Average) (GT - LC = 2 dB)							
Channel	Mode	RB		Conducted		EIRP	
		Size	Offset	Power (dBm)	Power (Watts)	EIRP(dBm)	EIRP(W)
Lowest	QPSK	1	99	22.56	0.1803	24.56	0.2858
Middle		1	99	22.69	0.1858	24.69	0.2944
Highest		1	99	22.91	0.1954	24.91	0.3097
Lowest	16QAM	1	99	21.89	0.1545	23.89	0.2449
Middle		1	99	22.06	0.1607	24.06	0.2547
Highest		1	99	22.62	0.1828	24.62	0.2897
Limit	EIRP < 1W			Result		PASS	

LTE Band 5 / 1.4MHz (Average) (GT - LC = 0 dB)							
Channel	Mode	RB		Conducted		ERP	
		Size	Offset	Power (dBm)	Power (Watts)	ERP(dBm)	ERP(W)
Lowest	QPSK	3	3	23.15	0.2065	21.00	0.1259
Middle		3	3	23.07	0.2028	20.92	0.1236
Highest		3	3	22.86	0.1932	20.71	0.1178
Lowest	16QAM	1	3	22.42	0.1746	20.27	0.1064
Middle		1	3	22.37	0.1726	20.22	0.1052
Highest		1	3	22.18	0.1652	20.03	0.1007
Limit	ERP < 7W			Result		PASS	

LTE Band 5 / 3MHz (Average) (GT - LC = 0 dB)							
Channel	Mode	RB		Conducted		ERP	
		Size	Offset	Power (dBm)	Power (Watts)	ERP(dBm)	ERP(W)
Lowest	QPSK	1	8	23.16	0.2070	21.01	0.1262
Middle		1	8	23.07	0.2028	20.92	0.1236
Highest		1	8	22.93	0.1963	20.78	0.1197
Lowest	16QAM	1	8	22.40	0.1738	20.25	0.1059
Middle		1	8	22.33	0.1710	20.18	0.1042
Highest		1	8	22.16	0.1644	20.01	0.1002
Limit	ERP < 7W			Result		PASS	

LTE Band 5 / 5MHz (Average) (GT - LC = 0 dB)							
Channel	Mode	RB		Conducted		ERP	
		Size	Offset	Power (dBm)	Power (Watts)	ERP(dBm)	ERP(W)
Lowest	QPSK	1	12	23.13	0.2056	20.98	0.1253
Middle		1	12	23.06	0.2023	20.91	0.1233
Highest		1	12	22.86	0.1932	20.71	0.1178
Lowest	16QAM	1	0	22.44	0.1754	20.29	0.1069
Middle		1	0	22.39	0.1734	20.24	0.1057
Highest		1	0	22.17	0.1648	20.02	0.1005
Limit	ERP < 7W			Result		PASS	

LTE Band 5 / 10MHz (Average) (GT - LC = 0 dB)							
Channel	Mode	RB		Conducted		ERP	
		Size	Offset	Power (dBm)	Power (Watts)	ERP(dBm)	ERP(W)
Lowest	QPSK	1	25	23.20	0.2089	21.05	0.1274
Middle		1	25	23.11	0.2046	20.96	0.1247
Highest		1	25	22.92	0.1959	20.77	0.1194
Lowest	16QAM	1	25	22.29	0.1694	20.14	0.1033
Middle		1	25	22.27	0.1687	20.12	0.1028
Highest		1	25	22.13	0.1633	19.98	0.0995
Limit	ERP < 7W			Result		PASS	

LTE Band 7 / 5MHz (Average) (GT - LC = 3 dB)							
Channel	Mode	RB		Conducted		EIRP	
		Size	Offset	Power (dBm)	Power (Watts)	EIRP(dBm)	EIRP(W)
Lowest	QPSK	1	12	22.91	0.1954	25.91	0.3899
Middle		1	12	22.79	0.1901	25.79	0.3793
Highest		1	12	23.09	0.2037	26.09	0.4064
Lowest	16QAM	1	0	22.29	0.1694	25.29	0.3381
Middle		1	0	22.23	0.1671	25.23	0.3334
Highest		1	0	22.34	0.1714	25.34	0.3420
Limit	EIRP < 2W			Result		PASS	

LTE Band 7 / 10MHz (Average) (GT - LC = 3 dB)							
Channel	Mode	RB		Conducted		EIRP	
		Size	Offset	Power (dBm)	Power (Watts)	EIRP(dBm)	EIRP(W)
Lowest	QPSK	1	25	22.91	0.1954	25.91	0.3899
Middle		1	25	22.77	0.1892	25.77	0.3776
Highest		1	25	22.77	0.1892	25.77	0.3776
Lowest	16QAM	1	25	22.26	0.1683	25.26	0.3357
Middle		1	25	22.17	0.1648	25.17	0.3289
Highest		1	25	22.29	0.1694	25.29	0.3381
Limit	EIRP < 2W			Result		PASS	

LTE Band 7 / 15MHz (Average) (GT - LC = 3 dB)							
Channel	Mode	RB		Conducted		EIRP	
		Size	Offset	Power (dBm)	Power (Watts)	EIRP(dBm)	EIRP(W)
Lowest	QPSK	1	74	22.74	0.1879	25.74	0.3750
Middle		1	74	22.87	0.1936	25.87	0.3864
Highest		1	74	22.94	0.1968	25.94	0.3926
Lowest	16QAM	1	0	22.29	0.1694	25.29	0.3381
Middle		1	0	22.28	0.1690	25.28	0.3373
Highest		1	0	22.35	0.1718	25.35	0.3428
Limit	EIRP < 2W			Result		PASS	

LTE Band 7 / 20MHz (Average) (GT - LC = 3 dB)							
Channel	Mode	RB		Conducted		EIRP	
		Size	Offset	Power (dBm)	Power (Watts)	EIRP(dBm)	EIRP(W)
Lowest	QPSK	1	0	22.96	0.1977	25.96	0.3945
Middle		1	0	22.83	0.1919	25.83	0.3828
Highest		1	0	22.75	0.1884	25.75	0.3758
Lowest	16QAM	1	0	21.97	0.1574	24.97	0.3141
Middle		1	0	21.92	0.1556	24.92	0.3105
Highest		1	0	22.08	0.1614	25.08	0.3221
Limit	EIRP < 2W			Result		PASS	

LTE Band 41 / 5MHz (Average) (GT - LC = 3 dB)							
Channel	Mode	RB		Conducted		EIRP	
		Size	Offset	Power (dBm)	Power (Watts)	EIRP(dBm)	EIRP(W)
	QPSK	1	12	23.84	0.2421	26.84	0.4831
Middle		1	12	23.95	0.2483	26.95	0.4955
Highest		1	12	23.55	0.2265	26.55	0.4519
Lowest	16QAM	1	0	22.00	0.1585	25.00	0.3162
Middle		1	0	21.89	0.1545	24.89	0.3083
Highest		1	0	21.81	0.1517	24.81	0.3027
Limit	EIRP < 2W			Result		PASS	

LTE Band 41 / 10MHz (Average) (GT - LC = 3 dB)							
Channel	Mode	RB		Conducted		EIRP	
		Size	Offset	Power (dBm)	Power (Watts)	EIRP(dBm)	EIRP(W)
Lowest	QPSK	1	25	23.88	0.2443	26.88	0.4875
Middle		1	25	24.08	0.2559	27.08	0.5105
Highest		1	25	23.68	0.2333	26.68	0.4656
Lowest	16QAM	1	25	21.98	0.1578	24.98	0.3148
Middle		1	25	22.15	0.1641	25.15	0.3273
Highest		1	25	21.77	0.1503	24.77	0.2999
Limit	EIRP < 2W			Result		PASS	

LTE Band 41 / 15MHz (Average) (GT - LC = 3 dB)							
Channel	Mode	RB		Conducted		EIRP	
		Size	Offset	Power (dBm)	Power (Watts)	EIRP(dBm)	EIRP(W)
Lowest	QPSK	1	37	24.12	0.2582	27.12	0.5152
Middle		1	37	23.78	0.2388	26.78	0.4764
Highest		1	37	23.60	0.2291	26.60	0.4571
Lowest	16QAM	1	0	22.50	0.1778	25.50	0.3548
Middle		1	0	22.52	0.1786	25.52	0.3565
Highest		1	0	22.11	0.1626	25.11	0.3243
Limit	EIRP < 2W			Result		PASS	

LTE Band 41 / 20MHz (Average) (GT - LC = 3 dB)							
Channel	Mode	RB		Conducted		EIRP	
		Size	Offset	Power (dBm)	Power (Watts)	EIRP(dBm)	EIRP(W)
Lowest	QPSK	1	0	24.12	0.2582	27.12	0.5152
Middle		1	0	23.76	0.2377	26.76	0.4742
Highest		1	0	23.79	0.2393	26.79	0.4775
Lowest	16QAM	1	0	22.15	0.1641	25.15	0.3273
Middle		1	0	21.99	0.1581	24.99	0.3155
Highest		1	0	21.86	0.1535	24.86	0.3062
Limit	EIRP < 2W			Result		PASS	

LTE Band 26 / 1.4MHz (Average) (GT - LC = 0 dB)							
Channel	Mode	RB		Conducted		ERP	
		Size	Offset	Power (dBm)	Power (Watts)	ERP(dBm)	ERP(W)
Lowest	QPSK	1	3	23.00	0.1995	20.85	0.1216
Middle		1	3	22.79	0.1901	20.64	0.1159
Highest		1	3	22.77	0.1892	20.62	0.1153
Lowest	16QAM	1	0	22.79	0.1901	20.64	0.1159
Middle		1	0	22.54	0.1795	20.39	0.1094
Highest		1	0	22.50	0.1778	20.35	0.1084
Limit	ERP < 7W			Result		PASS	

LTE Band 26 / 3MHz (Average) (GT - LC = 0 dB)							
Channel	Mode	RB		Conducted		ERP	
		Size	Offset	Power (dBm)	Power (Watts)	ERP(dBm)	ERP(W)
Lowest	QPSK	1	8	23.12	0.2051	20.97	0.1250
Middle		1	8	22.79	0.1901	20.64	0.1159
Highest		1	8	22.95	0.1972	20.80	0.1202
Lowest	16QAM	1	0	22.39	0.1734	20.24	0.1057
Middle		1	0	22.23	0.1671	20.08	0.1019
Highest		1	0	22.07	0.1611	19.92	0.0982
Limit	ERP < 7W			Result		PASS	

LTE Band 26 / 5MHz (Average) (GT - LC = 0 dB)							
Channel	Mode	RB		Conducted		ERP	
		Size	Offset	Power (dBm)	Power (Watts)	ERP(dBm)	ERP(W)
Lowest	QPSK	1	24	23.12	0.2051	20.97	0.1250
Middle		1	24	22.87	0.1936	20.72	0.1180
Highest		1	24	22.75	0.1884	20.60	0.1148
Lowest	16QAM	1	0	22.38	0.1730	20.23	0.1054
Middle		1	0	22.28	0.1690	20.13	0.1030
Highest		1	0	22.18	0.1652	20.03	0.1007
Limit	ERP < 7W			Result		PASS	

LTE Band 26 / 10MHz (Average) (GT - LC = 0 dB)							
Channel	Mode	RB		Conducted		ERP	
		Size	Offset	Power (dBm)	Power (Watts)	ERP(dBm)	ERP(W)
Lowest	QPSK	1	25	23.21	0.2094	21.06	0.1276
Middle		1	25	23.07	0.2028	20.92	0.1236
Highest		1	25	22.91	0.1954	20.76	0.1191
Lowest	16QAM	1	25	22.47	0.1766	20.32	0.1076
Middle		1	25	22.29	0.1694	20.14	0.1033
Highest		1	25	22.20	0.1660	20.05	0.1012
Limit	ERP < 7W			Result		PASS	

LTE Band 26 / 15MHz (Average) (GT - LC = 0 dB)							
Channel	Mode	RB		Conducted		ERP	
		Size	Offset	Power (dBm)	Power (Watts)	ERP(dBm)	ERP(W)
Lowest	QPSK	1	37	23.26	0.2118	21.11	0.1291
Middle		1	37	22.95	0.1972	20.80	0.1202
Highest		1	37	23.04	0.2014	20.89	0.1227
Lowest	16QAM	1	0	22.57	0.1807	20.42	0.1102
Middle		1	0	22.52	0.1786	20.37	0.1089
Highest		1	0	22.32	0.1706	20.17	0.1040
Limit	ERP < 7W			Result		PASS	

LTE Band 38 / 5MHz (Peak) (GT - LC = 3 dB)							
Channel	Mode	RB		Conducted		EIRP	
		Size	Offset	Power (dBm)	Power (Watts)	EIRP(dBm)	EIRP(W)
Lowest	QPSK	1	0	22.78	0.1897	25.78	0.3784
Middle		1	0	22.87	0.1936	25.87	0.3864
Highest		1	0	22.65	0.1841	25.65	0.3673
Lowest	16QAM	1	0	22.15	0.1641	25.15	0.3273
Middle		1	0	21.99	0.1581	24.99	0.3155
Highest		1	0	21.80	0.1514	24.80	0.3020
Limit	EIRP < 2W			Result		PASS	

LTE Band 38 / 10MHz (Peak) (GT - LC = 3 dB)							
Channel	Mode	RB		Conducted		EIRP	
		Size	Offset	Power (dBm)	Power (Watts)	EIRP(dBm)	EIRP(W)
Lowest	QPSK	1	0	22.96	0.1977	25.96	0.3945
Middle		1	0	22.85	0.1928	25.85	0.3846
Highest		1	0	22.75	0.1884	25.75	0.3758
Lowest	16QAM	1	25	22.10	0.1622	25.10	0.3236
Middle		1	25	21.96	0.1570	24.96	0.3133
Highest		1	25	21.74	0.1493	24.74	0.2979
Limit	EIRP < 2W			Result		PASS	

LTE Band 38 / 15MHz (Peak) (GT - LC = 3 dB)							
Channel	Mode	RB		Conducted		EIRP	
		Size	Offset	Power (dBm)	Power (Watts)	EIRP(dBm)	EIRP(W)
Lowest	QPSK	1	74	23.04	0.2014	26.04	0.4018
Middle		1	74	22.97	0.1982	25.97	0.3954
Highest		1	74	22.77	0.1892	25.77	0.3776
Lowest	16QAM	1	74	22.19	0.1656	25.19	0.3304
Middle		1	74	22.09	0.1618	25.09	0.3228
Highest		1	74	21.95	0.1567	24.95	0.3126
Limit	EIRP < 2W			Result		PASS	

LTE Band 38 / 20MHz (Peak) (GT - LC = 3 dB)							
Channel	Mode	RB		Conducted		EIRP	
		Size	Offset	Power (dBm)	Power (Watts)	EIRP(dBm)	EIRP(W)
Lowest	QPSK	1	0	22.70	0.1862	25.70	0.3715
Middle		1	0	22.82	0.1914	25.82	0.3819
Highest		1	0	23.10	0.2042	26.10	0.4074
Lowest	16QAM	1	0	22.24	0.1675	25.24	0.3342
Middle		1	0	22.15	0.1641	25.15	0.3273
Highest		1	0	22.08	0.1614	25.08	0.3221
Limit	EIRP < 2W			Result		PASS	

Radiated Spurious Emission

LTE Band 2

LTE Band 2 / 15MHz / QPSK									
Channel	Frequency (MHz)	EIRP (dBm)	Limit (dBm)	Over Limit (dB)	SPA Reading (dBm)	S.G. Power (dBm)	TX Cable loss (dB)	TX Antenna Gain (dBi)	Polarization (H/V)
Highest	3780	-57.13	-13	-44.13	-77.78	-63.77	1.69	8.34	H
	5670	-52.53	-13	-39.53	-77.85	-59.58	2.72	9.77	H
	7560	-50.05	-13	-37.05	-77.22	-59.48	2.41	11.84	H
									H
									H
									H
									H
	3780	-57.23	-13	-44.23	-77.89	-63.87	1.69	8.34	V
	5670	-52.21	-13	-39.21	-77.51	-59.26	2.72	9.77	V
	7560	-49.99	-13	-36.99	-77.42	-59.42	2.41	11.84	V
									V
									V
									V
									V

Remark: Spurious emissions within 30-1000MHz were found more than 20dB below limit line.

LTE Band 4

LTE Band 4 / 20MHz / QPSK									
Channel	Frequency (MHz)	EIRP (dBm)	Limit (dBm)	Over Limit (dB)	SPA Reading (dBm)	S.G. Power (dBm)	TX Cable loss (dB)	TX Antenna Gain (dBi)	Polarization (H/V)
Lowest	3456	-56.79	-13	-43.79	-77.65	-63.01	1.59	7.81	H
	5184	-44.03	-13	-31.03	-68.43	-51.29	2.44	9.70	H
	6918	-51.19	-13	-38.19	-78.07	-59.27	2.62	10.70	H
									H
									H
									H
									H
	3456	-57.09	-13	-44.09	-77.88	-63.31	1.59	7.81	V
	5184	-48.85	-13	-35.85	-73.16	-56.11	2.44	9.70	V
	6918	-51.31	-13	-38.31	-78.22	-59.39	2.62	10.70	V
									V
									V
									V
									V
Middle	3480	-56.84	-13	-43.84	-77.93	-63.15	1.60	7.91	H
	5226	-46.54	-13	-33.54	-71.08	-53.77	2.47	9.70	H
	6966	-51.36	-13	-38.36	-78.34	-59.52	2.60	10.76	H
									H
									H
									H
									H
	3480	-56.08	-13	-43.08	-77.05	-62.39	1.60	7.91	V
	5226	-49.05	-13	-36.05	-73.44	-56.28	2.47	9.70	V
	6966	-51.15	-13	-38.15	-78.14	-59.31	2.60	10.76	V
									V
									V
									V
									V

Highest	3510	-56.06	-13	-43.06	-77.17	-62.46	1.61	8.01	H
	5262	-44.68	-13	-31.68	-69.22	-51.89	2.49	9.70	H
	7014	-50.33	-13	-37.33	-77.22	-58.57	2.59	10.83	H
									H
									H
									H
									H
	3510	-56.01	-13	-43.01	-77.01	-62.41	1.61	8.01	V
	5262	-50.48	-13	-37.48	-74.94	-57.69	2.49	9.70	V
	7014	-50.52	-13	-37.52	-77.53	-58.76	2.59	10.83	V
									V
									V
									V
									V

Remark: Spurious emissions within 30-1000MHz were found more than 20dB below limit line.

LTE Band 5

LTE Band 5 / 10MHz / QPSK									
Channel	Frequency (MHz)	ERP (dBm)	Limit (dBm)	Over Limit (dB)	SPA Reading (dBm)	S.G. Power (dBm)	TX Cable loss (dB)	TX Antenna Gain (dBi)	Polarization (H/V)
Lowest	1656	-61.11	-13	-48.11	-73.6	-62.84	0.98	4.86	H
	2488	-50.58	-13	-37.58	-68.11	-52.51	1.29	5.36	H
	3320	-57.35	-13	-44.35	-77.01	-60.86	1.55	7.21	H
									H
									H
									H
									H
	1656	-49.47	-13	-36.47	-62.42	-51.2	0.98	4.86	V
	2488	-39.62	-13	-26.62	-57.6	-41.55	1.29	5.36	V
	3320	-46.63	-13	-33.63	-66.63	-50.14	1.55	7.21	V
									V
									V
									V
									V

Remark: Spurious emissions within 30-1000MHz were found more than 20dB below limit line.

LTE Band 26

LTE Band 26 / 15MHz / QPSK									
Channel	Frequency (MHz)	ERP (dBm)	Limit (dBm)	Over Limit (dB)	SPA Reading (dBm)	S.G. Power (dBm)	TX Cable loss (dB)	TX Antenna Gain (dBi)	Polarization (H/V)
Highest	1680	-61.17	-13	-48.17	-73.66	-62.82	0.99	4.80	H
	2528	-36.86	-13	-23.86	-54.45	-38.83	1.30	5.42	H
	3368	-57.08	-13	-44.08	-76.98	-60.79	1.56	7.42	H
									H
									H
									H
									H
	1680	-62.54	-13	-49.54	-74.66	-64.19	0.99	4.80	V
	2528	-38.39	-13	-25.39	-56.48	-40.36	1.30	5.42	V
	3368	-57.81	-13	-44.81	-77.81	-61.52	1.56	7.42	V
									V
									V
									V
									V

Remark: Spurious emissions within 30-1000MHz were found more than 20dB below limit line.

LTE Band 7

LTE Band 7 / 20MHz / QPSK									
Channel	Frequency (MHz)	EIRP (dBm)	Limit (dBm)	Over Limit (dB)	SPA Reading (dBm)	S.G. Power (dBm)	TX Cable loss (dB)	TX Antenna Gain (dBi)	Polarization (H/V)
Lowest	5000	-53.98	-25	-28.98	-77.68	-61.34	2.34	9.70	H
	7500	-50.88	-25	-25.88	-77.85	-60.25	2.43	11.80	H
	10000	-45.37	-25	-20.37	-76.75	-54.87	2.70	12.20	H
									H
									H
									H
									H
	5000	-53.99	-25	-28.99	-77.47	-61.35	2.34	9.70	V
	7500	-50.27	-25	-25.27	-77.45	-59.64	2.43	11.80	V
	10000	-45.67	-25	-20.67	-77.01	-55.17	2.70	12.20	V
									V
									V
									V
									V

Remark: Spurious emissions within 30-1000MHz were found more than 20dB below limit line.

LTE Band 38

LTE Band 38 / 15MHz / QPSK									
Channel	Frequency (MHz)	EIRP (dBm)	Limit (dBm)	Over Limit (dB)	SPA Reading (dBm)	S.G. Power (dBm)	TX Cable loss (dB)	TX Antenna Gain (dBi)	Polarization (H/V)
Middle	5202	-47.36	-25	-22.36	-71.57	-54.61	2.45	9.70	H
	7806	-34.98	-25	-9.98	-62.76	-44.63	2.33	11.98	H
	10404	-45.67	-25	-20.67	-78.11	-55.34	2.69	12.36	H
									H
									H
									H
									H
	5202	-50.36	-25	-25.36	-74.37	-57.61	2.45	9.70	V
	7806	-33.84	-25	-8.84	-61.99	-43.49	2.33	11.98	V
	10408	-45.76	-25	-20.76	-78.06	-55.43	2.69	12.36	V
									V
									V
									V
									V

Remark: Spurious emissions within 30-1000MHz were found more than 20dB below limit line.

LTE Band 41

LTE Band 41 / 20MHz / QPSK									
Channel	Frequency (MHz)	EIRP (dBm)	Limit (dBm)	Over Limit (dB)	SPA Reading (dBm)	S.G. Power (dBm)	TX Cable loss (dB)	TX Antenna Gain (dBi)	Polarization (H/V)
Highest	5310	-52.96	-25	-27.96	-77.42	-60.14	2.52	9.70	H
	7962	-45.71	-25	-20.71	-73.96	-55.51	2.28	12.08	H
	10620	-44.76	-25	-19.76	-77.74	-54.49	2.69	12.42	H
									H
									H
									H
									H
	5310	-53.24	-25	-28.24	-77.57	-60.42	2.52	9.70	V
	7962	-47.07	-25	-22.07	-75.61	-56.87	2.28	12.08	V
	10620	-45.25	-25	-20.25	-78	-54.98	2.69	12.42	V
									V
									V
									V
									V

Remark: Spurious emissions within 30-1000MHz were found more than 20dB below limit line.

———THE END———