HEARING AID COMPATIBILITY T-COIL TEST REPORT

FCC ID	: IHDT56YA1
Equipment	: Mobile Cellular Phone
Brand Name	: Motorola
T-Rating	: T3
Applicant	: Motorola Mobility LLC 222 W,Merchandise Mart Plaza, Chicago IL 60654 USA
Manufacturer	: Motorola Mobility LLC 222 W,Merchandise Mart Plaza, Chicago IL 60654 USA
Standard	: FCC 47 CFR §20.19 ANSI C63.19-2011

The product was received on Apr. 06, 2019 and testing was started from Apr. 08, 2019 and completed on Apr. 09, 2019. We, SPORTON INTERNATIONAL INC., would like to declare that the tested sample has been evaluated in accordance with the test procedures and has been in compliance with the applicable technical standards.

The report must not be used by the client to claim product certification, approval, or endorsement by TAF or any agency of government.

The test results in this variant report apply exclusively to the tested model / sample. Without written approval of SPORTON INTERNATIONAL INC. EMC & Wireless Communications Laboratory, the test report shall not be reproduced except in full.

Cona Huang

Approved by: Cona Huang / Deputy Manager

SPORTON INTERNATIONAL INC. EMC & Wireless Communications Laboratory
No. 52, Huaya 1st Rd., Guishan Dist., Taoyuan City, Taiwan (R.O.C.)

Table of Contents

1. Attestation of Test Results 4
2. General Information 5
3. Testing Location 6
4. Applied Standards 6
5. Air Interface and Operating Mode 7
6. Measurement standards for T-Coil 8
6.1 Frequency Response 8
6.2 T-Coil Signal Quality Categories 8
7. T-Coil Test Procedure 9
7.1 Test Flow Chart 10
7.2 Test Setup Diagram 11
7.3 Description of EUT Test Position 14
8. Test Equipment List 15
9. T-Coil testing for CMRS Voice 16
9.1 GSM Tests Results 16
9.2 UMTS Tests Results 17
9.3 CDMA Tests Results 17
10. T-Coil testing for CMRS IP Voice 18
10.1 VoLTE Tests Results 18
10.2 VoWiFi Tests Results 20
11. T-Coil testing for OTT VoIP Application 22
12. Uncertainty Assessment 25
13. References 26

Appendix A. Plots of T-Coil Measurement
Appendix B. DASY Calibration Certificate

History of this test report

Report No.	Version	Description	Issued Date
HA922117-02B	Rev. 01	Initial issue of report	May 21, 2019

1. Attestation of Test Results

Air Interface	Band MHz	T-Rating	Frequency Response	Magnetic Intensity
GSM CMRS Voice	GSM850	T3	Pass	Pass
	GSM1900	T4	Pass	Pass
OTT over EDGE	EDGE850	T3	Pass	Pass
	EDGE1900	T4	Pass	Pass
UMTS CMRS Voice	Band 2	T4	Pass	Pass
	Band 4	T4	Pass	Pass
	Band 5	T4	Pass	Pass
OTT over UMTS	Band 2	T4	Pass	Pass
	Band 4	T4	Pass	Pass
	Band 5	T4	Pass	Pass
CDMA CMRS Voice	BC0	T4	Pass	Pass
	BC1	T4	Pass	Pass
	BC10	T4	Pass	Pass
OTT over CDMA	BC0	T4	Pass	Pass
	BC1	T4	Pass	Pass
	BC10	T4	Pass	Pass
VoLTE	Band 2	T4	Pass	Pass
	Band 4	T4	Pass	Pass
	Band 5	T4	Pass	Pass
	Band 7	T4	Pass	Pass
	Band 12	T4	Pass	Pass
	Band 13	T4	Pass	Pass
	Band 14	T4	Pass	Pass
	Band 17	T4	Pass	Pass
	Band 26	T4	Pass	Pass
	Band 30	T4	Pass	Pass
	Band 66	T4	Pass	Pass
OTT over LTE	Band 7	T4	Pass	Pass
VoWiFI	2450	T3	Pass	Pass
	5200	T3	Pass	Pass
	5300	T3	Pass	Pass
	5500	T3	Pass	Pass
	5800	T3	Pass	Pass
OTT over WiFi	2450	T4	Pass	Pass
	5200	T3	Pass	Pass
Date Tested	2019/04/08 ~ 2019/04/09			

The device is compliance with HAC limits specified in guidelines FCC 47CFR §20.19 and ANSI Standard ANSI C63.19.

Reviewed by: Jason Wang
Report Producer: Wan Liu

2. General Information

Product Feature & Specification	
Applicant Name	Motorola Mobility LLC
Equipment Name	Mobile Cellular Phone
Brand Name	Motorola
FCC ID	IHDT56YA1
HW Version	88941-1-12
SW Version	fastboot_surfna_oem_userdebug_9_PPB29.12_2fc78_intcfg-test-keys_oem
EUT Stage	Identical Prototype
Frequency Band	GSM850: 824.2 MHz ~ 848.8 MHz GSM1900: 1850.2 MHz ~ 1909.8 MHz WCDMA Band II: 1852.4 MHz ~ 1907.6 MHz WCDMA Band IV: 1712.4 MHz ~ 1752.6 MHz WCDMA Band V: 826.4 MHz ~ 846.6 MHz CDMA2000 BC0: 824.7 MHz ~ 848.31 MHz CDMA 2000 BC1: 1851.25 MHz ~ 1908.75 MHz CDMA 2000 BC10: 817.9 MHz ~ 823.1 MHz LTE Band 2: 1850.7 MHz ~ 1909.3 MHz LTE Band 4: 1710.7 MHz ~ 1754.3 MHz LTE Band 5: 824.7 MHz ~ 848.3 MHz LTE Band 7: 2502.5 MHz ~ 2567.5 MHz LTE Band 12: 699.7 MHz ~ 715.3 MHz LTE Band 13: 779.5 MHz ~ 784.5 MHz LTE Band 14: 790.5 MHz ~ 795.5 MHz LTE Band 17: 706.5 MHz ~ 713.5 MHz LTE Band 26: 814.7 MHz ~ 848.3 MHz LTE Band 30: 2307.5 MHz ~ 2312.5 MHz LTE Band 66: 1710.7 MHz ~ 1779.3 MHz WLAN 2.4GHz Band: 2412 MHz ~ 2462 MHz WLAN 5.2GHz Band: 5180 MHz ~ 5240 MHz WLAN 5.3GHz Band: 5260 MHz ~ 5320 MHz WLAN 5.5GHz Band: 5500 MHz ~ 5700 MHz WLAN 5.8GHz Band: 5745 MHz ~ 5825 MHz Bluetooth: 2402 MHz ~ 2480 MHz
Mode	GSM/GPRS/EGPRS AMR / RMC 12.2Kbps HSDPA HSUPA DC-HSDPA CDMA2000 : 1xRTT/1xEv-Do(Rel.0)/1xEv-Do(Rev.A) LTE: QPSK, 16QAM, 64QAM 802.11a/b/g/n HT20/HT40 Bluetooth BR/EDR/LE
Remark: 1. There are two battery options, for T-coil evaluation is selected battery1 as the main test, battery2 choose worst air interface to be tested. 2. For this device FCC ID: IHDT56YA1 is similar FCC ID: IHDT56YA3, for the T-coil support capabilities are the same, the different only wireless bands not the same.	

Battery Option				
Battery 1	Brand Name	ATL	Model Name	KE40
Battery 2	Brand Name	Sunwoda	Model Name	KE40

3. Testing Location

Sporton Lab is accredited to ISO 17025 by Taiwan Accreditation Foundation (TAF code: 1190) and the FCC designation No. TW1190 under the FCC 2.948(e) by Mutual Recognition Agreement (MRA) in FCC test.

Testing Laboratory	
Test Site	SPORTON INTERNATIONAL INC.
Test Site Location	No. 52, Huaya 1st Rd., Guishan Dist., Taoyuan City, Taiwan (R.O.C.) TEL: +886-3-327-3456 FAX: +886-3-328-4978
Test Site No.	Sporton Site No.: **SAR04-HY**

4. Applied Standards

- FCC CFR47 Part 20.19
- ANSI C63.19 2011-version
- FCC KDB 285076 D01 HAC Guidance v05
- FCC KDB 285076 D02 T Coil testing v03
- FCC KDB 285076 D03 HAC FAQ v01

5. Air Interface and Operating Mode

Air Interface	Band MHz	Type	C63.19 Tested	Simultaneous Transmitter	Name of Voice Service	Power Reduction
GSM	GSM850	VO	Yes	WLAN, BT	CMRS Voice	No
	GSM1900			WLAN, BT		No
	EDGE850	VD	Yes	WLAN, BT	Google Duo(1)	No
	EDGE1900					
UMTS	850	VO	Yes	WLAN, BT	CMRS Voice	No
	1750			WLAN, BT		No
	1900			WLAN, BT		No
	HSPA	VD	Yes	WLAN, BT	Google Duo(1)	No
CDMA	850	VO	Yes	WLAN, BT	CMRS Voice	No
	1900			WLAN, BT		No
	EVDO	VD	Yes	WLAN, BT	Google Duo(1)	No
LTE (FDD)	Band 2	VD	Yes	WLAN, BT	VoLTE / Google Duo(1)	No
	Band 4			WLAN, BT		No
	Band 5			WLAN, BT		No
	Band 7			WLAN, BT		No
	Band 12			WLAN, BT		No
	Band 13			WLAN, BT		No
	Band 14			WLAN, BT		No
	Band 17			WLAN, BT		No
	Band 26			WLAN, BT		No
	Band 30			WLAN, BT		No
	Band 66			WLAN, BT		No
Wi-Fi	2450	VD	Yes	GSM,WCDMA,CDMA,LTE	VoWiFi(1) / Google Duo(1)	No
	5200					No
	5300					No
	5500					No
	5800					No
BT	2450	DT	No	GSM,WCDMA,CDMA,LTE	NA	No

Type Transport:
VO= Voice only
DT= Digital Transport only (no voice)
VD= CMRS and IP Voice Service over Digital Transport

Remark:
1. For protocols not listed in Table 7.1 of ANSI C63.19-2011 or the ANSI C63.19-2011 VoLTE interpretation, the average speech level of −20 dBm0 should be used.
2. The device have similar frequency in some LTE bands: LTE B5/26, 4/66, 12/17, since the supported frequency spans for the smaller LTE bands are completely cover by the larger LTE bands, therefore, only larger LTE bands were required to be tested for hearing-aid compliance.

6. Measurement standards for T-Coil

6.1 Frequency Response

The frequency response of the perpendicular component of the magnetic field, measured in 1/3 octave bands, shall follow the response curve specified in this sub-clause, over the frequency range 300 Hz to 3000 Hz.
Figure 1.1 and Figure 1.2 provide the boundaries as a function of frequency. These response curves are for true field-strength measurements of the T-Coil signal. Thus, the 6 dB/octave probe response has been corrected from the raw readings.

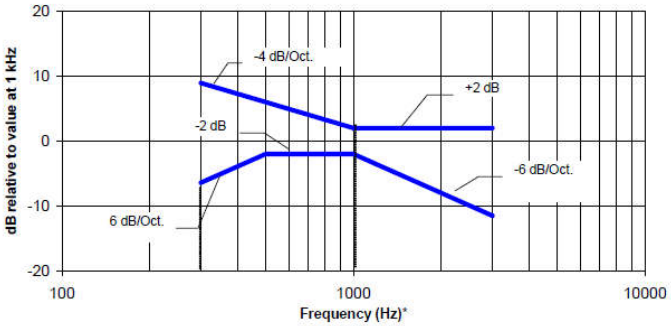

NOTE—The frequency response is between 300 Hz and 3000 Hz.

Fig. 1.1 Magnetic field frequency response for WDs with field strength≤-15dB at 1 KHz

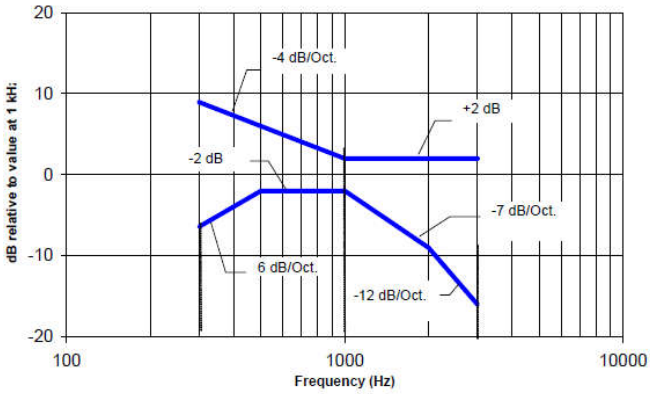

NOTE—The frequency response is between 300 Hz and 3000 Hz.

Fig. 1.2 Magnetic field frequency response for WDs with a field that exceeds –15 dB(A/m) at 1 kHz

6.2 T-Coil Signal Quality Categories

This section provides the signal quality requirement for the intended T-Coil signal from a WD. Only the RF immunity of the hearing aid is measured in T-Coil mode. It is assumed that a hearing aid can have no immunity to an interference signal in the audio band, which is the intended reception band for this mode. A device is assessed beginning by determining the category of the RF environment in the area of the T-Coil source.
The RF measurements made for the T-Coil evaluation are used to assign the category T1 through T4. The limitation is given in Table 1. This establishes the RF environment presented by the WD to a hearing aid.

Category	Telephone parameters WD signal quality ((signal + noise) to noise ratio in dB)
Category T1	0 to 10 dB
Category T2	10 to 20 dB
Category T3	20 to 30 dB
Category T4	> 30 dB

Table 1 T-Coil Signal Quality Categories

7. T-Coil Test Procedure

Referenced to ANSI C63.19-2011, Section 7.4,

This section describes the procedures used to measure the ABM (T-Coil) performance of the WD. In addition to measuring the absolute signal levels, the A-weighted magnitude of the unintended signal shall also be determined. To assure that the required signal quality is measured, the measurement of the intended signal and the measurement of the unintended signal must be made at the same location for each measurement position. In addition, the RF field strength at each measurement location must be at or below that required for the assigned category.

Measurements shall not include undesired properties from the WD's RF field; therefore, use of a coaxial connection to a base station simulator or non-radiating load, there might still be RF leakage from the WD, which can interfere with the desired measurement. Pre-measurement checks should be made to avoid this possibility. All measurements shall be performed with the WD operating on battery power with an appropriate normal speech audio signal input level given in ANSI C63.19-2011 Table 7.1. If the device display can be turned off during a phone call, then that may be done during the measurement as well,

Measurement shall be performed at two locations specified in ANSI C63.19-2011 A.3, with the correct probe orientation for a particular location, in a multistage sequence by first measuring the field intensity of the desired T-Coil signal the same location as the desired ABM or T-Coil signal (ABM1), and the ratio of desired to undesired magnetic components (ABM2) must be measured at the same location as the desired ABM or T-Coil signal (ABM1), and the ratio of desired to undesired ABM signals must be calculated. For the perpendicular field location, only the ABM1 frequency response shall be determined in a third measurement stage.

The following steps summarize the basic test flow for determining ABM1 and ABM2. These steps assume that a sine wave or narrowband 1/3 octave signal can be used for the measurement of ABM1.

a. A validation of the test setup and instrumentation may be performed using a TMFS or Helmholtz coil Measure the emissions and confirm that they are within the specified tolerance.
b. Position the WD in the test setup and connect the WD RF connector to a base station simulator or a non-radiating load. Confirm that equipment that requires calibration has been calibrated, and that the noise level meets the requirements given in ANSI C63.19-2011 clause 7.3.1.
c. The drive level to the WD ise set such that the reference input level specified in ANSI C63.19-2011 Table 7.1 is input to the base station simulator (or manufacturer's test mode equivalent) in 1 kHz, 1/3 octave band. This drive level shall be used for the T-Coil signal test (ABM1) at f = 1 kHz. Either a sine wave at 1025 Hz or a voice-like signal, band-limited to the 1 kHz 1/3 octave, as defined in ANSI C63.19-2011 clause 7.4.2, shall be used for the reference audio signal. If interference is found at 1025 Hz an alternative nearby reference audio signal frequency may be used. The same drive level shall be used for the ABM1 frequency response measurements at each 1/3 octave band center frequency. The WD volume control may be set at any level up to maximum, provided that a signal at any frequency at maximum modulation would not result in clipping or signal overload.
d. Determine the magnetic measurement locations for the WD device (A.3), if not already specified by the manufacturer, as described in ANSI C63.19-2011 clause 7.4.4.1.1 and 7.4.4.2.
e. At each measurement location, measure and record the desired T-Coil magnetic signals (ABM1 at fi) as described in ANSI C63.19-2011 clause 7.4.4.2 in each individual ISO 266-1975 R10 standard 1/3 octave band. The desired audio band input frequency (fi) shall be centered in each 1/3 octave band maintaining the same drive level as determined in item c) and the reading taken for that band.
f. Equivalent methods of determining the frequency response may also be employed, such as fast Fourier transform (FFT) analysis using noise excitation or input-output comparison using simulated speech. The full-band integrated probe output, as specified in D.9, may be used, as long as the appropriate calibration curve is applied to the measured result, so as to yield an accurate measurement of the field magnitude. (The resulting measurement shall be an accurate measurement in dB A/m.)
g. All Measurements of the desired signal shall be shown to be of the desired signal and not of an undesired signal. This may be shown by turning the desired signal ON and OFF with the probe measuring the same location. If the scanning method is used the scans shall show that all measurement points selected for the ABM1 measurement meet the ambient and test system noise criteria in ANSI C63.19-2011 clause 7.3.1.
h. At the measurement location for each orientation, measure and record the undesired broadband audio magnetic signal (ABM2) as specified in ANSI C63.19-2011 clause 7.4.4.4 with no audio signal applied (or digital zero applied, if appropriate) using A-weighting and the half-band integrator. Calculate the ratio of the desired to undesired signal strength (i,e., signal quality).
i. Obtain the data from the postprocessor, SEMCAD, and determine the category that properly classifies the signal quality based on ANSI C63.19-2011 Table 8.5.

7.1 Test Flow Chart

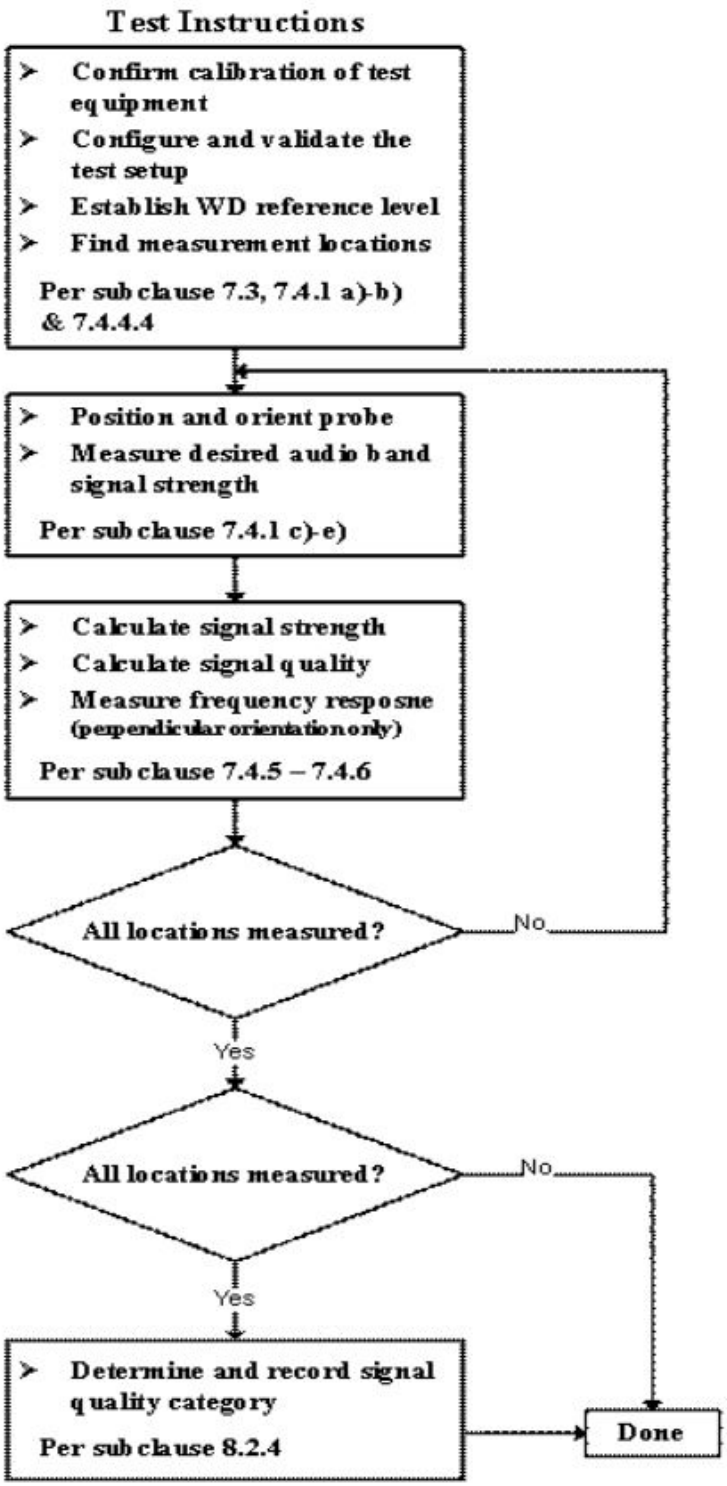

Fig. 2 T-Coil Signal Test flowchart

7.2 Test Setup Diagram

Test Setup for GSM / CDMA / VoLTE / VoWiFi CMRS service

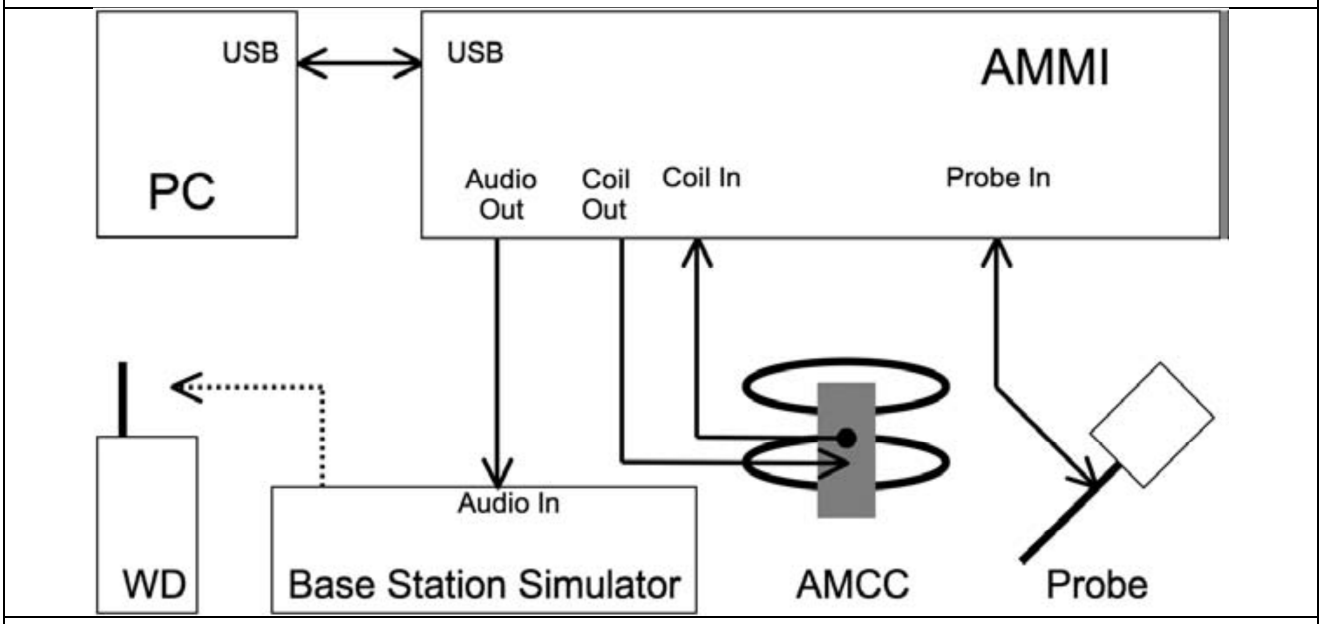

Test Setup for 3rd party VoIP calling

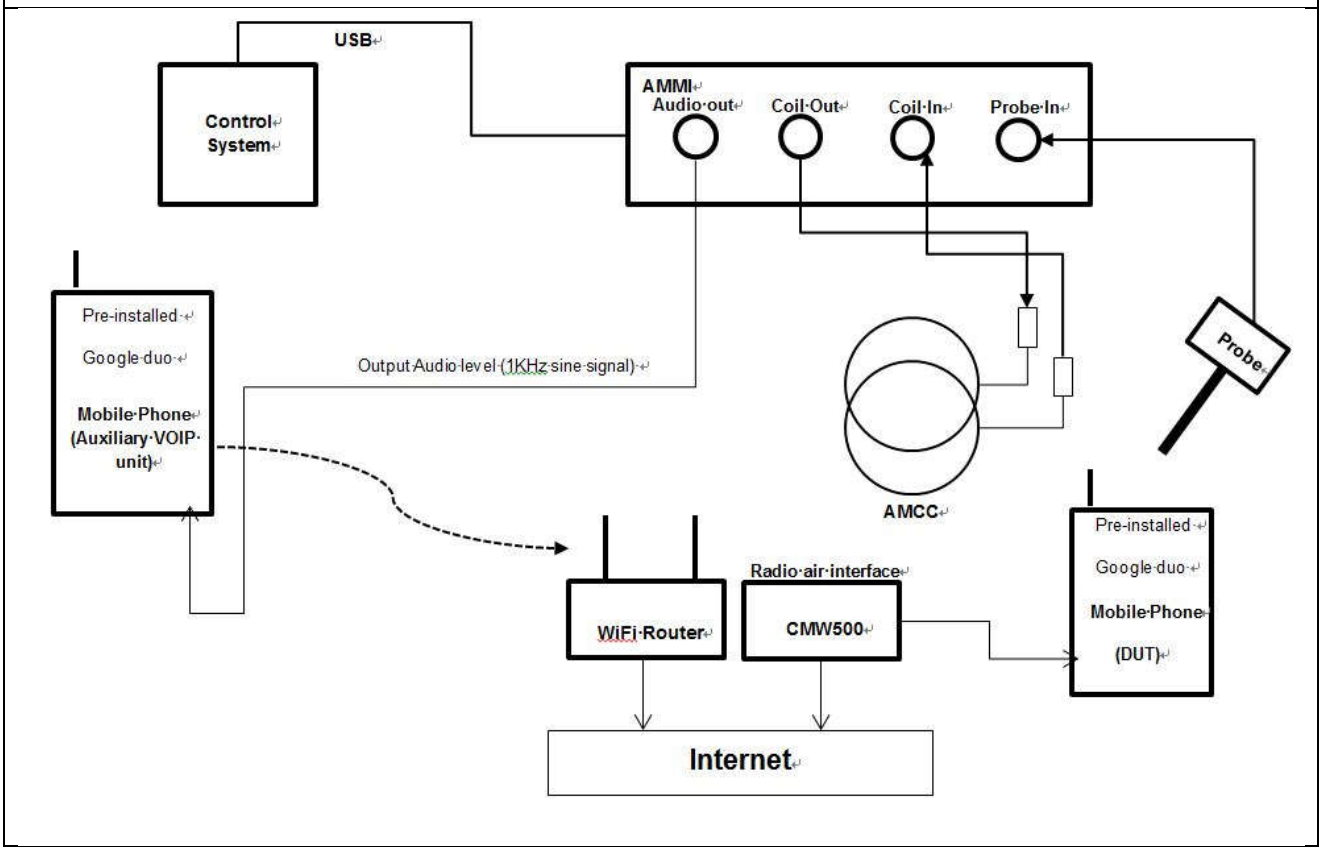

General Note:

1. Define the all applicable input audio level as below according to C63 and KDB 285076 D02v03:
   - GSM input level: -16dBm0
   - UMTS input level: -16dBm0
   - CDMA input level: -18dBm0
   - VoLTE input level: -16dBm0
   - VoWiFi input level: -20dBm0
   - OTT VoIP input Level: -20dBm0
2. For GSM / UMTS / CDMA test setup and input level, the correct input level definition is via a communication tester CMU200's "Decoder Cal" and "Codec Cal" with audio option B52 and B85 to set the correct audio input levels.
3. CMU200 is able to output 1kHz audio signal equivalent to 3.14dBm0 at "Decoder Cal." confuguration, the signal reference is used to adjust the AMMI gain setting to reach -16dBm0 for GSM/UMTS and -18dBm0 for CDMA. CMW500 input is calibrated and the relation between the analog input voltage and the internal level in dBm0 can be determined
4. Voice over Long-Term Evolution (VoLTE) is a standard for high-speed wireless communication for mobile phones and data terminals — including IoT devices and wearables. It is based on the IP Multimedia Subsystem (IMS) network, with specific profiles for control and media planes of voice service on LTE defined by GSMA in PRD IR.92. This approach results in the voice service (control and media planes) being delivered as data flows within the LTE data bearer. This means that there is no dependency on the legacy circuit-switched voice network to be maintained
5. For Voice over Wi-Fi (VoWiFi) is a term typically employed to describe the delivery of commercial telephony services using Voice over IP (VoIP) technologies from mobile devices connected across Wi-Fi. This is typically counter to alternatives, predominantly Voice over LTE (VoLTE), in which a mobile network operator's (MNO's) licensed spectrum (i.e. 4G LTE) is used to carry packetized voice. Broadly speaking, VoWiFi terminology is assigned to all core IMS services accessed from unlicensed spectrum and across untrusted access infrastructures, such as public Wi-Fi access points
6. The test setup used for VoLTE over IMS and VoWiFi over IMS is via the callbox of CMW500 for T-coil measurement, The data application unit of the CMW500 was used to simulate the IP multimedia subsystem server. The CMW500 can be manually configured to ensure and control the speech input level result is -16dBm0 for VoLTE, -20dBm0 for VoWiFi when the device during the IMS connection.
7. Voice over Internet Protocol (VoIP) such as google duo application, also called IP telephony, is a methodology and group of technologies for the delivery of voice communications and multimedia sessions over Internet Protocol (IP) networks, such as the Internet. The terms Internet telephony, broadband telephony, and broadband phone service specifically refer to the provisioning of communications services (voice, fax, SMS, voice-messaging) over the public Internet, rather than via the public switched telephone network (PSTN)
8. The test setup used for Google DUO VoIP call is via the data application unit on CMW500 connection to the Internet, also connection to the other auxiliary VoIP unit which is used to configure the audio codec and bit rate and also monitor the audio input level of -20dBm0.

1. The Required gain factor for the specific signal shall typically be multiplied by this factor to achieve approx. the same level as for the 1kHz sine signal
2. The below calculation formula is an example and showing how to determine the input level for the device.

The predefined signal types have the following differences / factors compared to the 1kHz sine signal:

Signal [file name]	Duration [s]	Peak-to-RMS [dB]	RMS [dB]	Required gain factor *)	Gain setting
1kHz sine	---	3.0	0.0	1.00	
48k_1.025kHz_10s.wav	10	3.0	0.0	1.00	
48k_1kHz_3.15kHz_10s.wav	10	6.0	-3.0	1.42	
48k_315Hz_1kHz_10s.wav	10	6.0	-2.9	1.40	
48k_csek_8k_441_white_10s.wav	10	13.8	-10.5	3.34	
48k_multisine_50-5000_10s.wav	10	11.1	-7.9	2.49	
48k_voice_1kHz_1s.wav	1	16.2	-12.7	4.33	
48k_voice_300-3000_2s.wav	2	21.6	-18.6	8.48	

(*) The gain for the specific signal shall typically be multiplied by this factor to acheive approx. the same level as for the 1kHz sine signal.

Insert the gain applicable for your setup in the last column of the table.

Calculation formula:
- Audio Level at -16dBm0 = ((-16dBm0) – (3.14dBm0)) + X dBv
- Calculated Gain at -16dBm0 = 10((audio level at -16dBm0 – Y dBm0) / 20) * 10
- Gatting setting at -16dBm0 = required gain factor * calculated gain

Gain Value	20* log(gain)	AMCC Coil In	Level
(linear)	dB	(dBv RMS)	dBm0
		-2.47	3.14
10	20	-19.85	-14.24
8.17	18.24	-21.61	-16

Signal Type	Duration (s)	Peak to RMS (dB)	RMS (dB)	Required Gain Factor	Calculated Gain Setting
1kHz sine	-	3	0	1	8.17
48k_voice_1kHz	1	16.2	-12.7	4.33	35.36
48k_voice_300Hz ~ 3kHz	2	21.6	-18.6	8.48	69.25

7.3 Description of EUT Test Position

Fig.3 illustrate the references and reference plane that shall be used in a typical EUT emissions measurement. The principle of this section is applied to EUT with similar geometry. Please refer to Appendix C for the setup photographs.

- The area is 5 cm by 5 cm.
- The area is centered on the audio frequency output transducer of the EUT.
- The area is in a reference plane, which is defined as the planar area that contains the highest point in the area of the phone that normally rests against the user's ear. It is parallel to the centerline of the receiver area of the phone and is defined by the points of the receiver-end of the EUT handset, which, in normal handset use, rest against the ear.
- The measurement plane is parallel to, and 10 mm in front of, the reference plane.

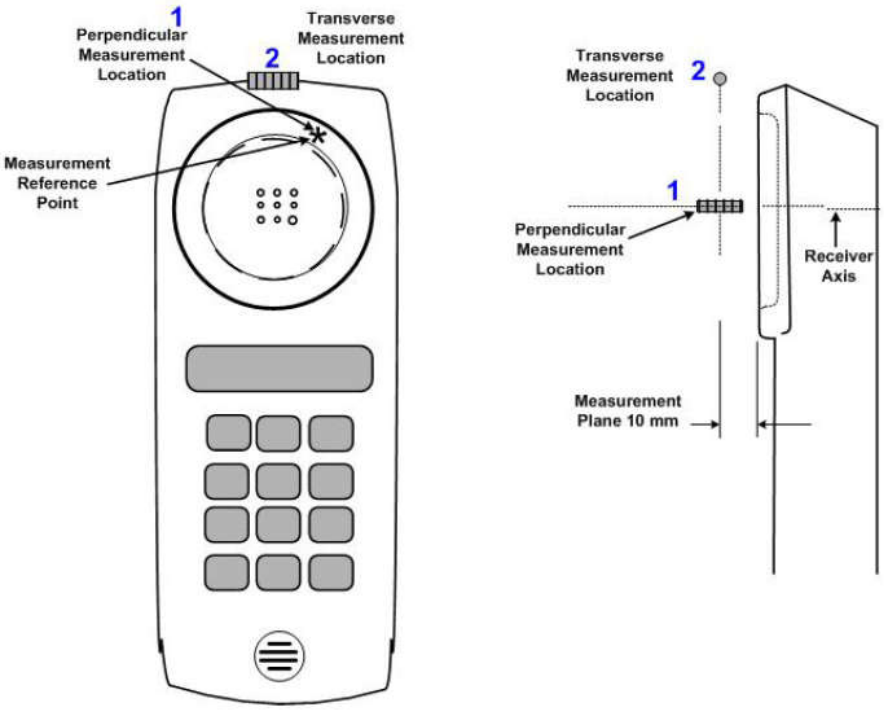

Fig.3 A typical EUT reference and plane for T-Coil measurements

8. Test Equipment List

Manufacturer	Name of Equipment	Type/Model	Serial Number	Calibration	
				Last Cal.	Due Date
SPEAG	Audio Magnetic 1D Field Probe	AM1DV3	3130	Nov. 20, 2018	Nov. 19, 2019
SPEAG	Data Acquisition Electronics	DAE4	778	May. 25, 2018	May. 24, 2019
SPEAG	Audio Magnetic Calibration Coil	AMCC	1049	NCR	NCR
SPEAG	Audio Measuring Instrument	AMMI	1041	NCR	NCR
SPEAG	Test Arch Phantom	N/A	N/A	NCR	NCR
SPEAG	Phone Positioner	N/A	N/A	NCR	NCR
TESTO	Hygro meter	608-H1	34913631	Aug. 27, 2018	Aug. 26, 2019
R&S	Base Station	CMW500	115793	May. 24, 2018	May. 23, 2019
R&S	Base Station	CMU200	116457	May. 30, 2018	May. 29, 2019

Note:

1. NCR: “No-Calibration Required”

9. T-Coil testing for CMRS Voice

General Note:

1. Codec Investigation: For a voice service/air interface, investigate the variations of codec configurations (WB, NB bit rate) and document the parameters (ABM1, ABM2, S+N/N, frequency response) for that voice service. It is only necessary to document this for one channel/band, the following worst investigation codec would be remarked to be used for the testing for the handset.
2. Air Interface Investigation:
   a. Use the worst-case codec test and document a limited set of bands/channel/bandwidths. Observe the effect of changing the band and bandwidth to ensure that there are no unexpected variations. Using the knowledge of the observed variations, it is necessary to report only a set band/channel/bandwidth for each orientation for a voice service/air interface.
   b. According to the ANSI C63.19 2011 section 7.3.2, test middle channel of each frequency band for HAC testing for each orientation to determine worst HAC T-Coil rating.

9.1 GSM Tests Results

<Codec Investigation>

Codec	FR_V1	HR_V1	Orientation	Band / Channel
ABM 1 (dBA/m)	-3.4	-2.73	Axial	GSM850 / 189
ABM 2 (dBA/m)	-27.16	-29.63		
Signal Quality (dB)	23.76	26.9		
Freq. Response	Pass	Pass		

Remark: According to codec investigation, the worst codec is FR_V1

<Air Interface Investigation>

Plot No.	Air Interface	Mode	Channel	Battery	Probe Position	ABM1 dB (A/m)	ABM2 dB (A/m)	Signal Quality dB	T Rating	Ambient Noise dB (A/m)	Freq. Response Variation dB	Frequency Response
1	GSM850	Voice	189	Battery 1	Axial (Z)	-3.40	-27.16	23.76	T3	-50.35	2	Pass
					Transversal (Y)	-11.98	-40.75	28.77	T3	-50.24		
2	GSM850	Voice	189	Battery 2	Axial (Z)	-3.24	-26.80	23.56	T3	-50.33	2	Pass
					Transversal (Y)	-10.94	-39.30	28.36	T3	-50.22		
3	GSM1900	Voice	661	Battery 1	Axial (Z)	-4.64	-38.49	33.85	T4	-50.34	2	Pass
					Transversal (Y)	-10.75	-46.07	35.32	T4	-50.23		

9.2 UMTS Tests Results

<Codec Investigation>

Codec	AMR 4.75Kbps	AMR 7.95Kbps	AMR 12.2Kbps	Orientation	Band / Channel
ABM 1 (dBA/m)	-2.63	-2.75	-2.61	Axial	Band 5 / 4182
ABM 2 (dBA/m)	-45.44	-44.59	-44.96		
Signal Quality (dB)	42.81	41.84	42.35		
Freq. Response	Pass	Pass	Pass		

Remark: According to codec investigation, the worst codec is AMR 7.95Kbps

<Air Interface Investigation>

Plot No.	Air Interface	Mode	Channel	Battery	Probe Position	ABM1 dB (A/m)	ABM2 dB (A/m)	Signal Quality dB	T Rating	Ambient Noise dB (A/m)	Freq. Response Variation dB	Frequency Response
4	WCDMA II	Voice	9400	Battery 1	Axial (Z)	-2.75	-44.59	41.84	T4	-50.33	1.92	Pass
					Transversal (Y)	-8.90	-46.13	37.23	T4	-50.21		
5	WCDMA IV	Voice	1413	Battery 1	Axial (Z)	-2.63	-44.14	41.51	T4	-50.30	1.96	Pass
					Transversal (Y)	-9.57	-45.03	35.46	T4	-50.24		
6	WCDMA V	Voice	4182	Battery 1	Axial (Z)	-2.70	-44.88	42.18	T4	-50.34	1.75	Pass
					Transversal (Y)	-8.99	-46.07	37.08	T4	-50.25		

9.3 CDMA Tests Results

<Codec Investigation>

Codec	RC1 SO68	RC3 SO68	RC4 SO68	Orientation	Band / Channel
ABM 1 (dBA/m)	-3.4	-2.73	-2.04	Axial	BC0 / 384
ABM 2 (dBA/m)	-39.87	-43.59	-41.3		
Signal Quality (dB)	36.47	40.86	39.26		
Freq. Response	Pass	Pass	Pass		

Remark: According to codec investigation, the worst codec is RC1 SO68

<Air Interface Investigation>

Plot No.	Air Interface	Mode	Channel	Battery	Probe Position	ABM1 dB (A/m)	ABM2 dB (A/m)	Signal Quality dB	T Rating	Ambient Noise dB (A/m)	Freq. Response Variation dB	Frequency Response
7	CDMA BC0	RC1+SO68 Voice codec8K Enhanced low	384	Battery 1	Axial (Z)	-3.40	-39.87	36.47	T4	-50.32	1.81	Pass
					Transversal (Y)	-9.52	-46.40	36.88	T4	-50.23		
8	CDMA BC1	RC1+SO68 Voice codec8K Enhanced low	600	Battery 1	Axial (Z)	-3.98	-38.77	34.79	T4	-50.31	1.57	Pass
					Transversal (Y)	-9.31	-46.33	37.02	T4	-50.20		
9	CDMA BC10	RC1+SO68 Voice codec8K Enhanced low	580	Battery 1	Axial (Z)	-3.70	-40.02	36.32	T4	-50.33	1.27	Pass
					Transversal (Y)	-9.05	-46.39	37.34	T4	-50.25		

10. T-Coil testing for CMRS IP Voice

10.1 VoLTE Tests Results

General Note:

1. Codec Investigation: For a voice service/air interface, investigate the variations of codec configurations (WB, NB bit rate) and document the parameters (ABM1, ABM2, S+N/N, frequency response) for that voice service. It is only necessary to document this for one channel / band, the following worst investigation codec would be remarked to be used for the testing for the handset.
2. Air Interface Investigation:
   a. Use the worst-case codec test and document a limited set of bands / channel / bandwidths. Observe the effect of changing the band and bandwidth to ensure that there are no unexpected variations. Using the knowledge of the observed variations, it is necessary to report only a set band/channel/bandwidth for each orientation for a voice service/air interface and the following worst configure would be remarked to be used for the testing for the handset.
   b. Select LTE FDD / TDD one frequency band to do measurement at the worst SNR position was additionally performed with varying the BWs/Modulations/RB size to verify the variation to find out worst configuration , the observed variation is very little to be within 1 dB which is much less than the margin from the rating threshold.
   c. The TDD LTE power class 3 supports uplink-downlink configuration 0 and 6 and power class 2 supports uplink-downlink configuration1 to 5 for this device, an investigation was performed to determine the worst-case uplink-downlink configuration to be used for the testing for the handset.
   d. According to the ANSI C63.19 2011 section 7.3.2, test middle channel of each frequency band for HAC testing for each orientation to determine worst HAC T-Coil rating.

<Codec Investigation>

LTE FDD

Codec	NB AMR 4.75Kbps	WB AMR 6.60Kbps	NB AMR 12.2Kbps	WB AMR 23.85Kbps	EVS SWB 9.6Kbps	EVS SWB 128Kbps	EVS WB 5.9Kbps	EVS WB 128Kbps	EVS NB 5.9Kbps	EVS NB 24.4Kbps	Orientation	Band / BW / Channel
ABM 1 (dBA/m)	-2.07	-3.09	-1.9	-5.23	-5.25	-4.55	-4.27	-5.02	-5	-4.92	Axial	B2 / 20M / 18900
ABM 2 (dBA/m)	-42.46	-42.25	-41.85	-44.59	-44.46	-43.88	-43.73	-44.62	-44.87	-44.81		
Signal Quality (dB)	40.39	39.16	39.95	39.36	39.21	39.33	39.46	39.6	39.87	39.89		
Freq. Response	Pass	Pass	Pass	Pass	Pass	Pass	Pass	Pass	Pass	Pass		

Remark: According to codec investigation, the worst codec is WB AMR 6.60Kbps

<Air Interface Investigation>

Air Interface		BW (MHz)	Modulation	RB Size	RB offset	Channel	ABM1 dB (A/m)	ABM2 dB (A/m)	Signal Quality dB
FDD	LTE B2	20	QPSK	1	0	18900	-2.82	-43.72	40.90
	LTE B2	20	QPSK	50	0	18900	-2.91	-44.27	41.36
	LTE B2	20	QPSK	100	0	18900	-2.79	-44.2	41.41
	LTE B2	20	16QAM	1	0	18900	-2.70	-44.09	41.39
	LTE B2	20	64QAM	1	0	18900	-2.70	-43.92	41.22
	LTE B2	15	QPSK	1	0	18900	-2.71	-43.73	41.02
	LTE B2	10	QPSK	1	0	18900	-2.64	-43.68	41.04
	LTE B2	5	QPSK	1	0	18900	-2.67	-43.76	41.09
	LTE B2	3	QPSK	1	0	18900	-2.88	-44.02	41.14
	LTE B2	1.4	QPSK	1	0	18900	-2.73	-43.87	41.14

Plot No.	Air Interface	BW (MHz)	Modulation	RB Size	RB offset	Channel	Battery	Probe Position	ABM1 dB (A/m)	ABM2 dB (A/m)	Signal Quality dB	T Rating	Ambient Noise dB (A/m)	Freq. Response Variation dB	Frequency Response
10	LTE Band 2	20M	QPSK	1	0	18900	Battery 1	Axial (Z)	-3.09	-42.25	39.16	T4	-50.38	0.48	Pass
								Transversal (Y)	-11.52	-45.45	33.93	T4	-50.24		
11	LTE Band 7	20M	QPSK	1	0	21100	Battery 1	Axial (Z)	-3.06	-43.09	40.03	T4	-50.35	0.69	Pass
								Transversal (Y)	-11.28	-44.49	33.21	T4	-50.25		
12	LTE Band 12	10M	QPSK	1	0	23095	Battery 1	Axial (Z)	-3.51	-43.25	39.74	T4	-50.33	0.35	Pass
								Transversal (Y)	-11.16	-45.84	34.68	T4	-50.22		
13	LTE Band 13	10M	QPSK	1	0	23230	Battery 1	Axial (Z)	-3.37	-43.90	40.53	T4	-50.36	1.13	Pass
								Transversal (Y)	-11.70	-46.07	34.37	T4	-50.23		
14	LTE Band 14	10M	QPSK	1	0	23330	Battery 1	Axial (Z)	-3.11	-43.71	40.60	T4	-50.34	1.02	Pass
								Transversal (Y)	-11.10	-45.32	34.22	T4	-50.26		
15	LTE Band 26	15M	QPSK	1	0	26865	Battery 1	Axial (Z)	-3.43	-42.19	38.76	T4	-50.37	0.57	Pass
								Transversal (Y)	-11.91	-45.48	33.57	T4	-50.26		
16	LTE Band 30	10M	QPSK	1	0	27710	Battery 1	Axial (Z)	-3.56	-43.89	40.33	T4	-50.34	0.79	Pass
								Transversal (Y)	-10.65	-45.66	35.01	T4	-50.22		
17	LTE Band 66	20M	QPSK	1	0	132322	Battery 1	Axial (Z)	-2.85	-42.41	39.56	T4	-50.36	0.66	Pass
								Transversal (Y)	-11.72	-45.79	34.07	T4	-50.27		

10.2 VoWiFi Tests Results

General Note:

1. Codec Investigation: For a voice service/air interface, investigate the variations of codec configurations (WB, NB bit rate) and document the parameters (ABM1, ABM2, S+N/N, frequency response) for that voice service. It is only necessary to document this for one channel/band, the following worst investigation codec would be remarked to be used for the testing for the handset.
2. Air Interface Investigation:
   a. Use the worst-case codec test and document a limited set of bands/channel/bandwidths. Observe the effect of changing the band and bandwidth to ensure that there are no unexpected variations. Using the knowledge of the observed variations, it is necessary to report only a set band/channel/bandwidth for each orientation for a voice service/air interface and the following worst configure would be remarked to be used for the testing for the handset.
   b. Select WLAN 2.4GHz and WLAN 5GHz one frequency band to do measurement at the worst SNR position was additionally performed with varying the BWs/Modulations/data rate to verify the variation to find out worst configuration , the observed variation is very little to be within 1 dB which is much less than the margin from the rating threshold.
   c. According to the ANSI C63.19 2011 section 7.3.2, test middle channel of each frequency band for HAC testing for each orientation to determine worst HAC T-Coil rating.

<Codec Investigation>

Codec	NB AMR 4.75Kbps	WB AMR 6.60Kbps	NB AMR 12.2Kbps	WB AMR 23.85Kbps	EVS SWB 9.6Kbps	EVS SWB 128Kbps	EVS WB 5.9Kbps	EVS WB 128Kbps	EVS NB 5.9Kbps	EVS NB 24.4Kbps	Orientation	Band / Channel
ABM 1 (dBA/m)	-5.91	-6.84	-7.57	-6.28	-6.47	-6.15	-6.28	-6.74	-6.12	-3.85	Axial	2.4GHz WLAN / 6
ABM 2 (dBA/m)	-42.07	-40.63	-41.62	-41.29	-41.48	-40.95	-40.33	-41.72	-40.4	-41.62		
Signal Quality (dB)	36.16	33.79	34.05	35.01	35.01	34.8	34.05	34.98	34.28	37.77		
Freq. Response	Pass	Pass	Pass	Pass	Pass	Pass	Pass	Pass	Pass	Pass		

Remark: According to codec investigation, the worst codec is WB AMR 6.60Kbps

<Air Interface Investigation>

Frequency Bands	Modulation	Bandwidth	Data Rate	Channel	ABM1 dB (A/m)	ABM2 dB (A/m)	Signal Quality dB
WLAN 2.4GHz	802.11b	20	1M	6	-6.89	-40.69	33.80
	802.11b	20	11M	6	-7.06	-41.08	34.02
	802.11g	20	6M	6	-6.88	-40.72	33.84
	802.11g	20	54M	6	-6.91	-40.85	33.94
	802.11n-HT20	20	MCS0	6	-7.03	-40.92	33.89
	802.11n-HT20	20	MCS7	6	-6.92	-40.73	33.81
	802.11n-HT40	40	MCS0	6	-6.99	-40.95	33.96
	802.11n-HT40	40	MCS7	6	-7.04	-40.97	33.93
WLAN 5GHz	802.11a	20	6M	40	-5.68	-41.26	35.58
	802.11a	20	54M	40	-5.78	-41.42	35.64
	802.11an-HT20	20	MCS0	40	-5.52	-41.38	35.86
	802.11an-HT20	20	MCS7	40	-5.65	-41.37	35.72
	802.11an-HT40	40	MCS0	38	-5.96	-41.80	35.84
	802.11an-HT40	40	MCS7	38	-5.43	-41.16	35.73

Plot No.	Air Interface	Mode	Channel	Battery	Probe Position	ABM1 dB (A/m)	ABM2 dB (A/m)	Signal Quality dB	T Rating	Ambient Noise dB (A/m)	Freq. Response Variation dB	Frequency Response
18	WLAN2.4GHz	802.11b 1Mbps	6	Battery 1	Axial (Z)	-6.84	-40.63	33.79	T4	-50.36	0.6	Pass
					Transversal (Y)	-14.49	-42.22	27.73	T3	-50.25		
19	WLAN5GHz	802.11a 6Mbps	40	Battery 1	Axial (Z)	-5.58	-41.15	35.57	T4	-50.35	0.59	Pass
					Transversal (Y)	-14.88	-41.59	26.71	T3	-50.25		
20	WLAN5GHz	802.11a 6Mbps	60	Battery 1	Axial (Z)	-5.60	-42.26	36.66	T4	-50.31	0.92	Pass
					Transversal (Y)	-14.93	-41.99	27.06	T3	-50.24		
21	WLAN5GHz	802.11a 6Mbps	116	Battery 1	Axial (Z)	-5.55	-39.79	34.24	T4	-50.32	0.21	Pass
					Transversal (Y)	-15.28	-43.47	28.19	T3	-50.23		
22	WLAN5GHz	802.11a 6Mbps	157	Battery 1	Axial (Z)	-5.19	-40.80	35.61	T4	-50.36	0.88	Pass
					Transversal (Y)	-14.35	-41.91	27.56	T3	-50.28		

11. T-Coil testing for OTT VoIP Application

General Notes:

1. According to the ANSI C63.19 2011 section 7.3.2, test middle channel of each frequency band for HAC testing for each orientation to determine worst HAC T-Coil rating.
2. The google Duo VoIP application are pre-installed on this device. According to KDB 285076 D02, all air interfaces via a data connection with VoIP application need to be considered HAC testing.
3. The Google Duo only support OPUS audio codec and support 6Kbps to 75Kbps bitrate.
4. The test setup used for OTT VoIP call is the DUT connect to the CMW500 and via the data application unit on CMW500 connection to the Internet, the Auxiliary EUT is connected to the WiFi access point, the channel/Modulation/Frequency bands/data rate is configured on the CMW500 for the DUT unit. For the Auxiliary VoIP unit which is used to configure the audio codec rate and determine the audio input level of -20dBm0 based on the KDB 285076 D02v03 requirement.
5. Codec Investigation: For a voice service/air interface, investigate the variations of codec configurations (WB, NB bit rate) and document the parameters (ABM1, ABM2, S+N/N, frequency response) for that voice service. It is only necessary to document this for one channel/band, the following tests results which the worst case codec would be remarked to be used for the testing for the handset.
6. Air Interface Investigation:
   a. Use the worst-case codec test and document a limited set of bands/channel/bandwidths. Observe the effect of changing the band and bandwidth to ensure that there are no unexpected variations. Using the knowledge of the observed variations, it is necessary to report only a set band/channel/bandwidth for each orientation for a voice service/air interface.
   b. Due to OTT service and CMRS IP service are all be established over the internet protocol for the voice service, and on both services use the identical RF air interface for the WIFI and LTE, therefore according to VoLTE and VoWiFi test results of air interface investigation, the worst configuration and frequency band of air interface was used for OTT T-Coil testing.
   -LTE FDD worst configuration and band: LTE Band 7/20MHz/QPSK/1RB Size
   -WLAN2.4GHz worst configuration: 802.11b /1Mbps
   -WLAN5GHz worst configuration and Band: WLAN 5.2GHz /11a/6Mbps

<Codec Investigation>

EDGE

Codec	OPUS Bitrate 6Kbps	OPUS Bitrate 40Kbps	OPUS Bitrate 75Kbps	Orientation	Band / Channel
ABM 1 (dBA/m)	-1.22	-2.73	-0.7	Axial	GSM850 / 189
ABM 2 (dBA/m)	-29.91	-31.9	-29.17		
Signal Quality (dB)	28.69	29.17	28.47		
Freq. Response	Pass	Pass	Pass		

Remark: According to codec investigation, the worst codec bitrate is 75kbps

HSPA

Codec	OPUS Bitrate 6Kbps	OPUS Bitrate 40Kbps	OPUS Bitrate 75Kbps	Orientation	Band / Channel
ABM 1 (dBA/m)	-0.8	-0.68	-0.72	Axial	UMTS B2 / 9400
ABM 2 (dBA/m)	-38.01	-36	-35.52		
Signal Quality (dB)	37.21	35.32	34.8		
Freq. Response	Pass	Pass	Pass		

Remark: According to codec investigation, the worst codec bitrate is 75kbps

1XEVDO Rev A

Codec	OPUS Bitrate 6Kbps	OPUS Bitrate 40Kbps	OPUS Bitrate 75Kbps	Orientation	Band / Channel
ABM 1 (dBA/m)	-0.37	-0.6	-0.44	Axial	BC0 / 384
ABM 2 (dBA/m)	-37.56	-35.72	-35.02		
Signal Quality (dB)	37.19	35.12	34.58		
Freq. Response	Pass	Pass	Pass		

Remark: According to codec investigation, the worst codec bitrate is 75kbps

LTE FDD

Codec	OPUS Bitrate 6Kbps	OPUS Bitrate 40Kbps	OPUS Bitrate 75Kbps	Orientation	Band / BW / Channel
ABM 1 (dBA/m)	-0.8	-0.16	-0.05	Axial	B7 / 20M / 21100
ABM 2 (dBA/m)	-37.76	-35.26	-34.55		
Signal Quality (dB)	36.96	35.1	34.5		
Freq. Response	Pass	Pass	Pass		

Remark: According to codec investigation, the worst codec bitrate is 75kbps

WLAN

Codec	OPUS Bitrate 6Kbps	OPUS Bitrate 40Kbps	OPUS Bitrate 75Kbps	Orientation	Band / Channel
ABM 1 (dBA/m)	0.05	-0.15	-0.03	Axial	WLAN2.4G / 6
ABM 2 (dBA/m)	-35.43	-34.48	-33.63		
Signal Quality (dB)	35.48	34.33	33.6		
Freq. Response	Pass	Pass	Pass		

Remark: According to codec investigation, the worst codec bitrate is 75kbps

Plot No.	Air Interface	Mode	Channel	Battery	Probe Position	ABM1 dB (A/m)	ABM2 dB (A/m)	Signal Quality dB	T Rating	Ambient Noise dB (A/m)	Freq. Response Variation dB	Frequency Response
23	GSM850	EDGE 2 Tx slots	189	Battery 1	Axial (Z)	-0.70	-29.17	28.47	T3	-50.39	0.92	Pass
					Transversal (Y)	-10.01	-40.23	30.22	T4	-50.28		
24	GSM1900	EDGE 2 Tx slots	661	Battery 1	Axial (Z)	-0.49	-31.73	31.24	T4	-50.36	0.86	Pass
					Transversal (Y)	-11.02	-41.97	30.95	T4	-50.24		
25	WCDMA II	HSPA	9400	Battery 1	Axial (Z)	-0.72	-35.52	34.80	T4	-50.37	1.2	Pass
					Transversal (Y)	-9.53	-42.20	32.67	T4	-50.27		
26	WCDMA IV	HSPA	1413	Battery 1	Axial (Z)	0.21	-34.39	34.60	T4	-50.32	1.3	Pass
					Transversal (Y)	-7.51	-39.80	32.29	T4	-50.21		
27	WCDMA V	HSPA	4182	Battery 1	Axial (Z)	-0.17	-34.38	34.21	T4	-50.36	1.19	Pass
					Transversal (Y)	-9.41	-41.57	32.16	T4	-50.25		
28	CDMA BC0	RTAP 153.6Kbps	384	Battery 1	Axial (Z)	-0.44	-35.02	34.58	T4	-50.34	1.19	Pass
					Transversal (Y)	-8.19	-40.36	32.17	T4	-50.24		
29	CDMA BC1	RTAP 153.6Kbps	600	Battery 1	Axial (Z)	-0.21	-34.49	34.28	T4	-50.36	1.13	Pass
					Transversal (Y)	-7.95	-40.17	32.22	T4	-50.23		
30	CDMA BC10	RTAP 153.6Kbps	580	Battery 1	Axial (Z)	-0.45	-34.78	34.33	T4	-50.35	1.08	Pass
					Transversal (Y)	-8.09	-40.24	32.15	T4	-50.22		
31	LTE Band 7	20M_QPSK_1_0	21100	Battery 1	Axial (Z)	0.05	-34.45	34.50	T4	-50.31	1.07	Pass
					Transversal (Y)	-8.25	-40.52	32.27	T4	-50.23		
32	WLAN2.4GHz	802.11b 1Mbps	6	Battery 1	Axial (Z)	-0.03	-33.63	33.60	T4	-50.33	0.74	Pass
					Transversal (Y)	-10.71	-41.72	31.01	T4	-50.25		
33	WLAN5GHz	802.11a 6Mbps	40	Battery 1	Axial (Z)	0.17	-33.13	33.30	T4	-50.34	0.81	Pass
					Transversal (Y)	-12.52	-40.16	27.64	T3	-50.25		

Remark:

1. Phone Condition: Mute on; Backlight off; Max Volume
2. The detail frequency response results please refer to appendix A.
3. Test Engineer：Nick Yu, Bevis Chang and Galen Chang.

12. Uncertainty Assessment

The evaluation of uncertainly by the statistical analysis of a series of observations is termed a Type A evaluation of uncertainty. The evaluation of uncertainty by means other than the statistical analysis of a series of observation is termed a Type B evaluation of uncertainty. Each component of uncertainty, however evaluated, is represented by an estimated standard deviation, termed standard uncertainty, which is determined by the positive square root of the estimated variance. The combined standard uncertainty of the measurement result represents the estimated standard deviation of the result. It is obtained by combining the individual standard uncertainties of both Type A and Type B evaluation using the usual “root-sum-squares” (RSS) methods of combining standard deviations by taking the positive square root of the estimated variances. Expanded uncertainty is a measure of uncertainty that defines an interval about the measurement result within which the measured value is confidently believed to lie. It is obtained by multiplying the combined standard uncertainty by a coverage factor. For purpose of this document, a coverage factor two is used, which corresponds to confidence interval of about 95 %. The DASY uncertainty Budget is showed in Table 8.2.
The judgment of conformity in the report is based on the measurement results excluding the measurement uncertainty.

Error Description	Uncertainty Value (±%)	Probability Distribution	Divisor	Ci (ABM1)	Ci (ABM2)	Standard Uncertainty (ABM1)	Standard Uncertainty (ABM2)
Probe Sensitivity							
Reference Level	3.0	Normal	1	1	1	± 3.0 %	± 3.0 %
AMCC Geometry	0.4	Rectangular	√3	1	1	± 0.2 %	± 0.2 %
AMCC Current	1.0	Rectangular	√3	1	1	± 0.6 %	± 0.6 %
Probe Positioning During Calibrate	0.1	Rectangular	√3	1	1	± 0.1 %	± 0.1 %
Noise Contribution	0.7	Rectangular	√3	0.0143	1	± 0.0 %	± 0.4 %
Frequency Slope	5.9	Rectangular	√3	0.1	1	± 0.3 %	± 3.5 %
Probe System							
Repeatability / Drift	1.0	Rectangular	√3	1	1	± 0.6 %	± 0.6 %
Linearity / Dynamic Range	0.6	Rectangular	√3	1	1	± 0.4 %	± 0.4 %
Acoustic Noise	1.0	Rectangular	√3	0.1	1	± 0.1 %	± 0.6 %
Probe Angle	2.3	Rectangular	√3	1	1	± 1.4 %	± 1.4 %
Spectral Processing	0.9	Rectangular	√3	1	1	± 0.5 %	± 0.5 %
Integration Time	0.6	Normal	1	1	5	± 0.6 %	± 3.0 %
Field Disturbation	0.2	Rectangular	√3	1	1	± 0.1 %	± 0.1 %
Test Signal							
Reference Signal Spectral Response	0.6	Rectangular	√3	0	1	± 0.0 %	± 0.4 %
Positioning							
Probe Positioning	1.9	Rectangular	√3	1	1	± 1.1 %	± 1.1 %
Phantom Thickness	0.9	Rectangular	√3	1	1	± 0.5 %	± 0.5 %
EUT Positioning	1.9	Rectangular	√3	1	1	± 1.1 %	± 1.1 %
External Contributions							
RF Interference	0.0	Rectangular	√3	1	0.3	± 0.0 %	± 0.0 %
Test Signal Variation	2.0	Rectangular	√3	1	1	± 1.2 %	± 1.2 %
Combined Standard Uncertainty						± 4.1 %	± 6.1 %
Coverage Factor for 95 %						K = 2	
Expanded Uncertainty						± 8.1 %	± 12.3 %

Table 8.2 Uncertainty Budget of audio band magnetic measurement

13. References

[1] ANSI C63.19-2011, “American National Standard for Methods of Measurement of Compatibility between Wireless Communications Devices and Hearing Aids”, 27 May 2011.

[2] FCC KDB 285076 D01v05, “Equipment Authorization Guidance for Hearing Aid Compatibility”, Sep 2017

[3] FCC KDB 285076 D02v03, “Guidance for performing T-Coil tests for air interfaces supporting voice over IP (e.g., LTE and WiFi) to support CMRS based telephone services”, Sep 2017

[4] FCC KDB 285076 D03v01, “Hearing aid compatibility frequently asked questions”, Sep 2017

[5] SPEAG DASY System Handbook

Appendix A. Plots of T-Coil Measurement

The plots are shown as follows.

Appendix B. Calibration Data

The DASY calibration certificates are shown as follows.