System Check_Head_750MHz

DUT: D750V3-1107

Communication System: CW; Frequency: 750 MHz;Duty Cycle: 1:1
Medium: HSL_750_190731 Medium parameters used: f = 750 MHz; σ = 0.893 S/m; ε_r = 40.49; ρ = 1000 kg/m^3
Ambient Temperature：23.6 ℃; Liquid Temperature：22.6 ℃

DASY5 Configuration:
- Probe: ES3DV3 - SN3169; ConvF(6.68, 6.68, 6.68) @ 750 MHz; Calibrated: 2019/5/24
- Sensor-Surface: 3mm (Mechanical Surface Detection)
- Electronics: DAE4 Sn1399; Calibrated: 2018/11/16
- Phantom: SAM_Right; Type: SAM; Serial: TP:1446
- Measurement SW: DASY52, Version 52.10 (2);SEMCAD X Version 14.6.12 (7470)

Pin=250mW/Area Scan (61x61x1): Interpolated grid: dx=1.500 mm, dy=1.500 mm
Maximum value of SAR (interpolated) = 2.43 W/kg

Pin=250mW/Zoom Scan (5x5x7)/Cube 0: Measurement grid: dx=8mm, dy=8mm, dz=5mm
Reference Value = 50.42 V/m; Power Drift = -0.02 dB
Peak SAR (extrapolated) = 2.59 W/kg
SAR(1 g) = 2.00 W/kg; SAR(10 g) = 1.43 W/kg
Maximum value of SAR (measured) = 2.13 W/kg

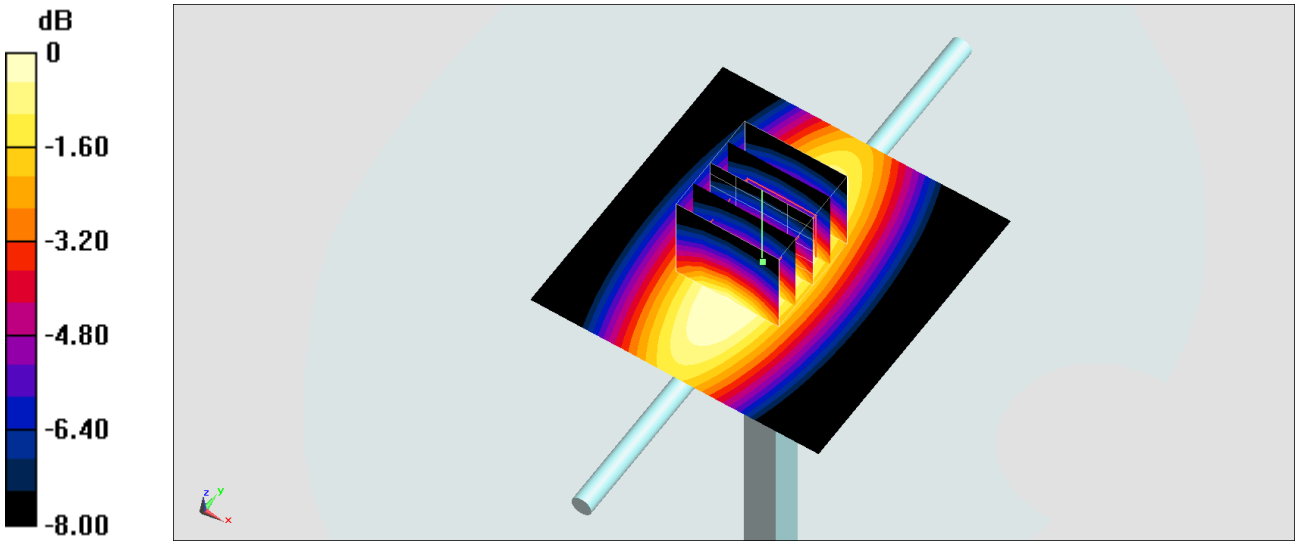

0 dB = 2.13 W/kg = 3.28 dBW/kg

System Check_Head_750MHz

DUT: D750V3-1107

Communication System: CW; Frequency: 750 MHz;Duty Cycle: 1:1
Medium: HSL_750_190811 Medium parameters used: f = 750 MHz; σ = 0.892 S/m; ε_r = 43.159; ρ = 1000 kg/m^3
Ambient Temperature：23.6 ℃; Liquid Temperature：22.6 ℃

DASY5 Configuration:
- Probe: EX3DV4 - SN3931; ConvF(10.54, 10.54, 10.54) @ 750 MHz; Calibrated: 2018/9/27
- Sensor-Surface: 1.4mm (Mechanical Surface Detection)
- Electronics: DAE4 Sn1399; Calibrated: 2018/11/16
- Phantom: SAM_Right; Type: SAM; Serial: TP:1446
- Measurement SW: DASY52, Version 52.10 (2);SEMCAD X Version 14.6.12 (7470)

Pin=250mW/Area Scan (61x61x1): Interpolated grid: dx=1.500 mm, dy=1.500 mm
Maximum value of SAR (interpolated) = 2.92 W/kg

Pin=250mW/Zoom Scan (5x5x7)/Cube 0: Measurement grid: dx=8mm, dy=8mm, dz=5mm
Reference Value = 60.77 V/m; Power Drift = -0.15 dB
Peak SAR (extrapolated) = 3.10 W/kg
SAR(1 g) = 2.15 W/kg; SAR(10 g) = 1.45 W/kg
Maximum value of SAR (measured) = 2.78 W/kg

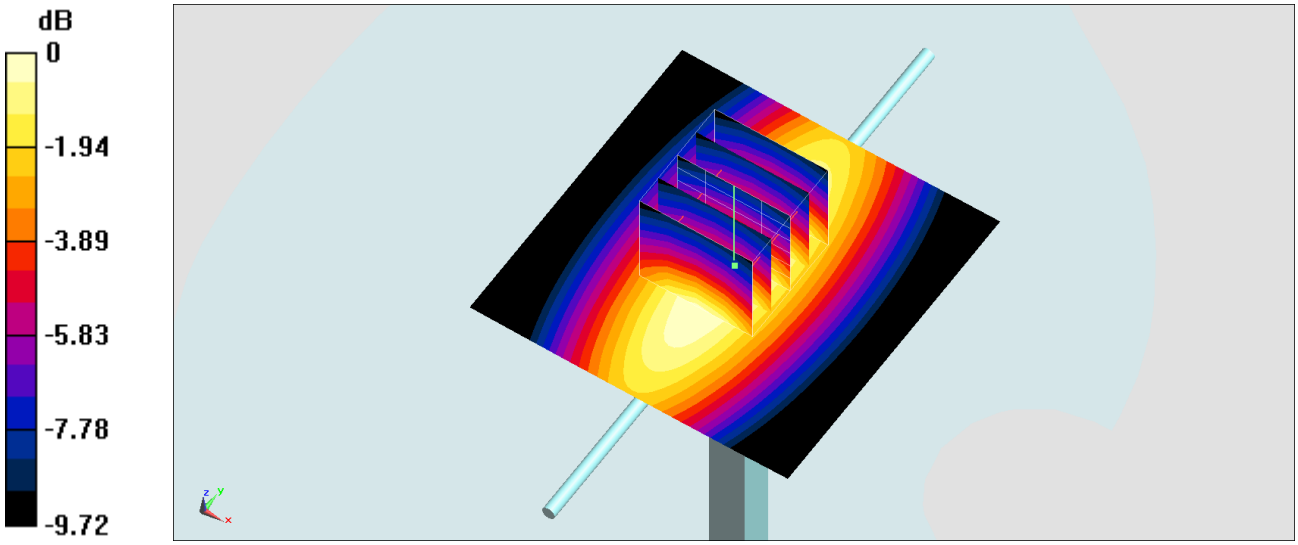

0 dB = 2.78 W/kg = 4.44 dBW/kg

System Check_Head_835MHz

DUT: D835V2-4d167

Communication System: CW; Frequency: 835 MHz;Duty Cycle: 1:1
Medium: HSL_850_190801 Medium parameters used: f = 835 MHz; σ = 0.894 S/m; ε_r = 41.84; ρ = 1000 kg/m^3
Ambient Temperature：23.3 ℃; Liquid Temperature：22.3 ℃

DASY5 Configuration:
- Probe: ES3DV3 - SN3169; ConvF(6.42, 6.42, 6.42) @ 835 MHz; Calibrated: 2019/5/24
- Sensor-Surface: 3mm (Mechanical Surface Detection)
- Electronics: DAE4 Sn1399; Calibrated: 2018/11/16
- Phantom: SAM_Right; Type: SAM; Serial: TP:1446
- Measurement SW: DASY52, Version 52.10 (2);SEMCAD X Version 14.6.12 (7470)

Pin=250mW/Area Scan (61x61x1): Interpolated grid: dx=1.500 mm, dy=1.500 mm
Maximum value of SAR (interpolated) = 2.70 W/kg

Pin=250mW/Zoom Scan (5x5x7)/Cube 0: Measurement grid: dx=8mm, dy=8mm, dz=5mm
Reference Value = 55.48 V/m; Power Drift = 0.03 dB
Peak SAR (extrapolated) = 3.37 W/kg
SAR(1 g) = 2.29 W/kg; SAR(10 g) = 1.51 W/kg
Maximum value of SAR (measured) = 2.67 W/kg

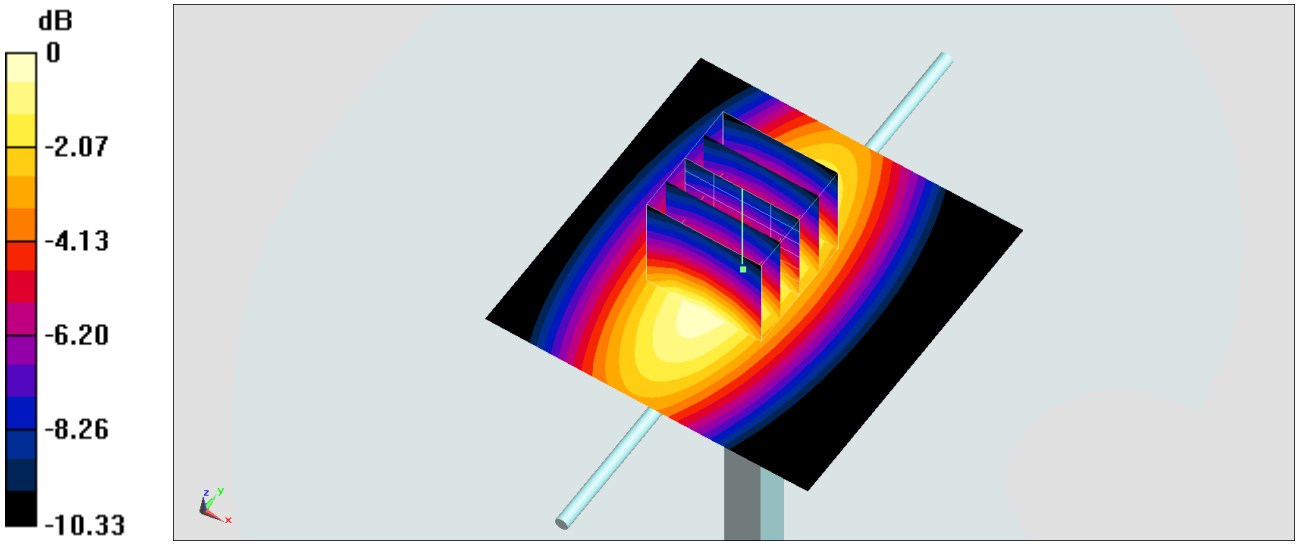

0 dB = 2.67 W/kg = 4.27 dBW/kg

System Check_Head_835MHz

DUT: D835V2-4d167

Communication System: CW; Frequency: 835 MHz;Duty Cycle: 1:1
Medium: HSL_850_190811 Medium parameters used: f = 835 MHz; σ = 0.894 S/m; ε_r = 41.616; ρ = 1000 kg/m^3
Ambient Temperature：23.4 ℃; Liquid Temperature：22.4 ℃

DASY5 Configuration:
- Probe: EX3DV4 - SN3931; ConvF(10.07, 10.07, 10.07) @ 835 MHz; Calibrated: 2018/9/27
- Sensor-Surface: 1.4mm (Mechanical Surface Detection)
- Electronics: DAE4 Sn1399; Calibrated: 2018/11/16
- Phantom: SAM_Right; Type: SAM; Serial: TP:1446
- Measurement SW: DASY52, Version 52.10 (2);SEMCAD X Version 14.6.12 (7470)

Pin=250mW/Area Scan (61x61x1): Interpolated grid: dx=1.500 mm, dy=1.500 mm
Maximum value of SAR (interpolated) = 3.21 W/kg

Pin=250mW/Zoom Scan (5x5x7)/Cube 0: Measurement grid: dx=8mm, dy=8mm, dz=5mm
Reference Value = 62.82 V/m; Power Drift = -0.16 dB
Peak SAR (extrapolated) = 3.64 W/kg
SAR(1 g) = 2.43 W/kg; SAR(10 g) = 1.6 W/kg
Maximum value of SAR (measured) = 3.23 W/kg

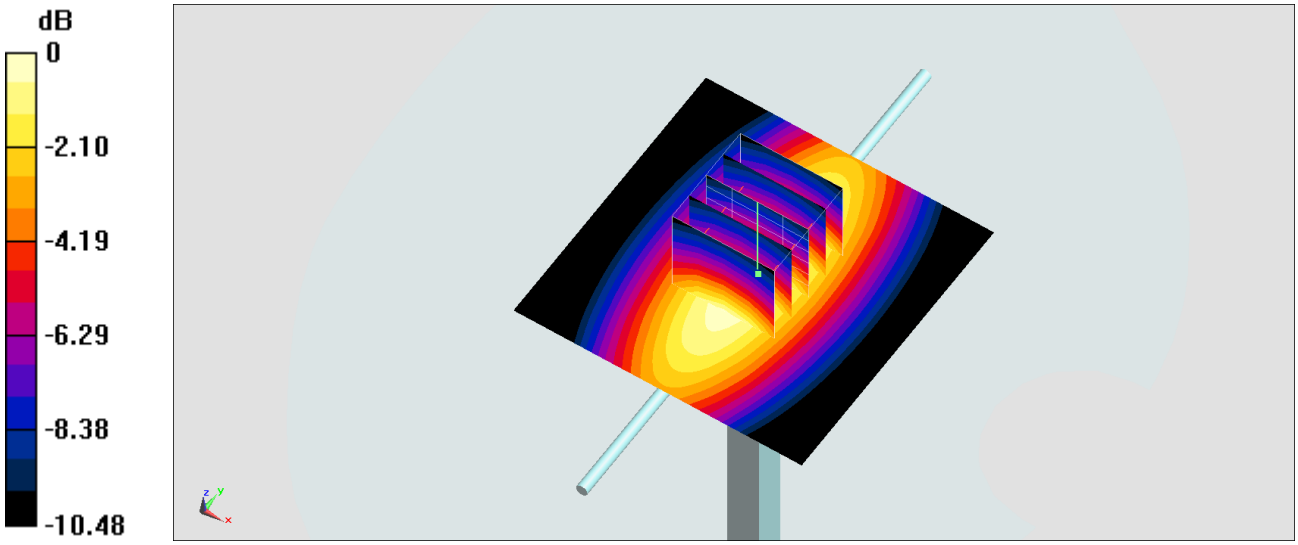

0 dB = 3.23 W/kg = 5.09 dBW/kg

System Check_Head_1750MHz

DUT: D1750V2-1112

Communication System: CW; Frequency: 1750 MHz;Duty Cycle: 1:1
Medium: HSL_1750_190802 Medium parameters used: f = 1750 MHz; σ = 1.388 S/m; ε_r = 40.086; ρ = 1000 kg/m^3
Ambient Temperature：23.7 ℃; Liquid Temperature：22.7 ℃

DASY5 Configuration:
- Probe: ES3DV3 - SN3169; ConvF(5.34, 5.34, 5.34) @ 1750 MHz; Calibrated: 2019/5/24
- Sensor-Surface: 3mm (Mechanical Surface Detection)
- Electronics: DAE4 Sn1399; Calibrated: 2018/11/16
- Phantom: SAM_Left; Type: QD000P40CD; Serial: TP:1815
- Measurement SW: DASY52, Version 52.10 (2);SEMCAD X Version 14.6.12 (7470)

Pin=250mW/Area Scan (61x61x1): Interpolated grid: dx=1.500 mm, dy=1.500 mm
Maximum value of SAR (interpolated) = 11.9 W/kg

Pin=250mW/Zoom Scan (5x5x7)/Cube 0: Measurement grid: dx=8mm, dy=8mm, dz=5mm
Reference Value = 94.48 V/m; Power Drift = -0.10 dB
Peak SAR (extrapolated) = 16.5 W/kg
SAR(1 g) = 9.34 W/kg; SAR(10 g) = 4.99 W/kg
Maximum value of SAR (measured) = 11.6 W/kg

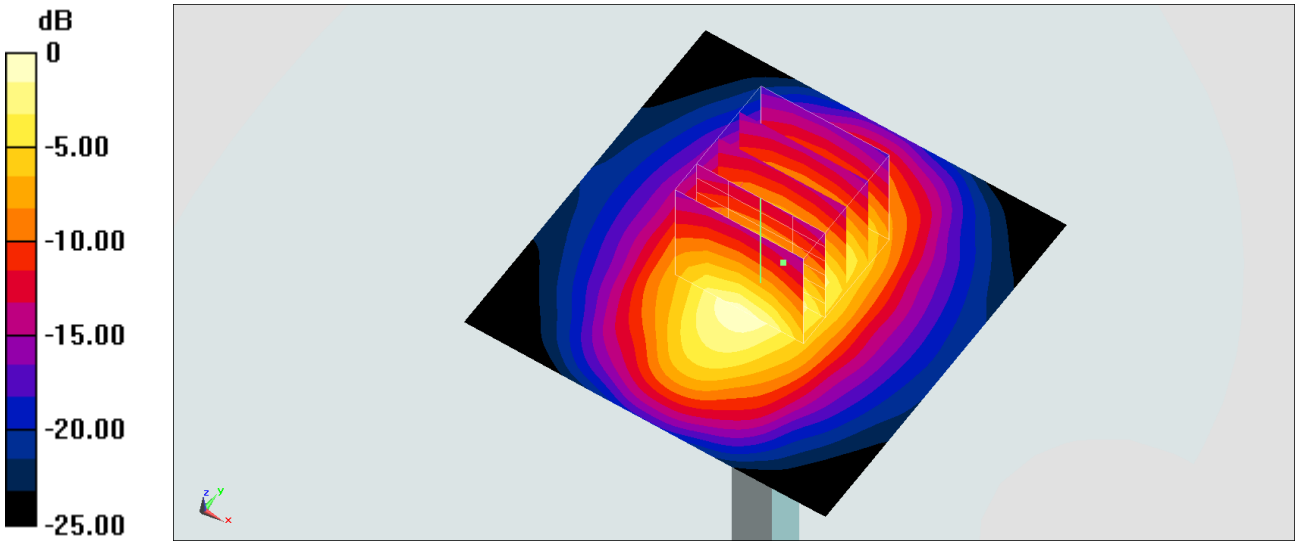

0 dB = 11.6 W/kg = 10.64 dBW/kg

System Check_Head_1750MHz

DUT: D1750V2-1112

Communication System: CW; Frequency: 1750 MHz;Duty Cycle: 1:1
Medium: HSL_1750_190809 Medium parameters used: f = 1750 MHz; σ = 1.347 S/m; ε_r = 40.84; ρ = 1000 kg/m^3
Ambient Temperature：23.3 ℃; Liquid Temperature：22.3 ℃

DASY5 Configuration:
- Probe: EX3DV4 - SN3931; ConvF(8.62, 8.62, 8.62) @ 1750 MHz; Calibrated: 2018/9/27
- Sensor-Surface: 1.4mm (Mechanical Surface Detection)
- Electronics: DAE4 Sn1399; Calibrated: 2018/11/16
- Phantom: SAM_Left; Type: QD000P40CD; Serial: TP:1815
- Measurement SW: DASY52, Version 52.10 (2);SEMCAD X Version 14.6.12 (7470)

Pin=250mW/Area Scan (61x61x1): Interpolated grid: dx=1.500 mm, dy=1.500 mm
Maximum value of SAR (interpolated) = 14.3 W/kg

Pin=250mW/Zoom Scan (5x5x7)/Cube 0: Measurement grid: dx=8mm, dy=8mm, dz=5mm
Reference Value = 106.5 V/m; Power Drift = -0.00 dB
Peak SAR (extrapolated) = 16.9 W/kg
SAR(1 g) = 9.42 W/kg; SAR(10 g) = 5.1 W/kg
Maximum value of SAR (measured) = 13.9 W/kg

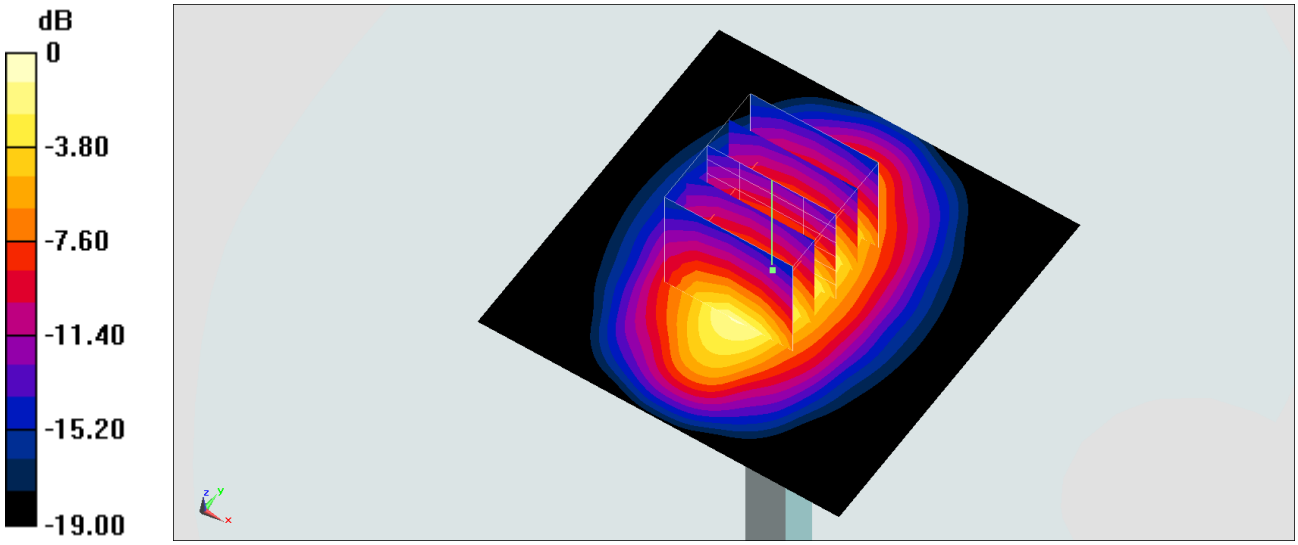

0 dB = 13.9 W/kg = 11.43 dBW/kg

System Check_Head_1750MHz

DUT: D1750V2-1112

Communication System: CW; Frequency: 1750 MHz;Duty Cycle: 1:1
Medium: HSL_1750_190810 Medium parameters used: f = 1750 MHz; σ = 1.371 S/m; ε_r = 41.63; ρ = 1000 kg/m^3
Ambient Temperature：23.3 ℃; Liquid Temperature：22.3 ℃

DASY5 Configuration:
- Probe: EX3DV4 - SN3931; ConvF(8.62, 8.62, 8.62) @ 1750 MHz; Calibrated: 2018/9/27
- Sensor-Surface: 1.4mm (Mechanical Surface Detection)
- Electronics: DAE4 Sn1399; Calibrated: 2018/11/16
- Phantom: SAM_Right; Type: SAM; Serial: TP:1446
- Measurement SW: DASY52, Version 52.10 (2);SEMCAD X Version 14.6.12 (7470)

Pin=250mW/Area Scan (61x61x1): Interpolated grid: dx=1.500 mm, dy=1.500 mm
Maximum value of SAR (interpolated) = 14.6 W/kg

Pin=250mW/Zoom Scan (5x5x7)/Cube 0: Measurement grid: dx=8mm, dy=8mm, dz=5mm
Reference Value = 106.5 V/m; Power Drift = -0.00 dB
Peak SAR (extrapolated) = 17.2 W/kg
SAR(1 g) = 9.6 W/kg; SAR(10 g) = 5.2 W/kg
Maximum value of SAR (measured) = 14.1 W/kg

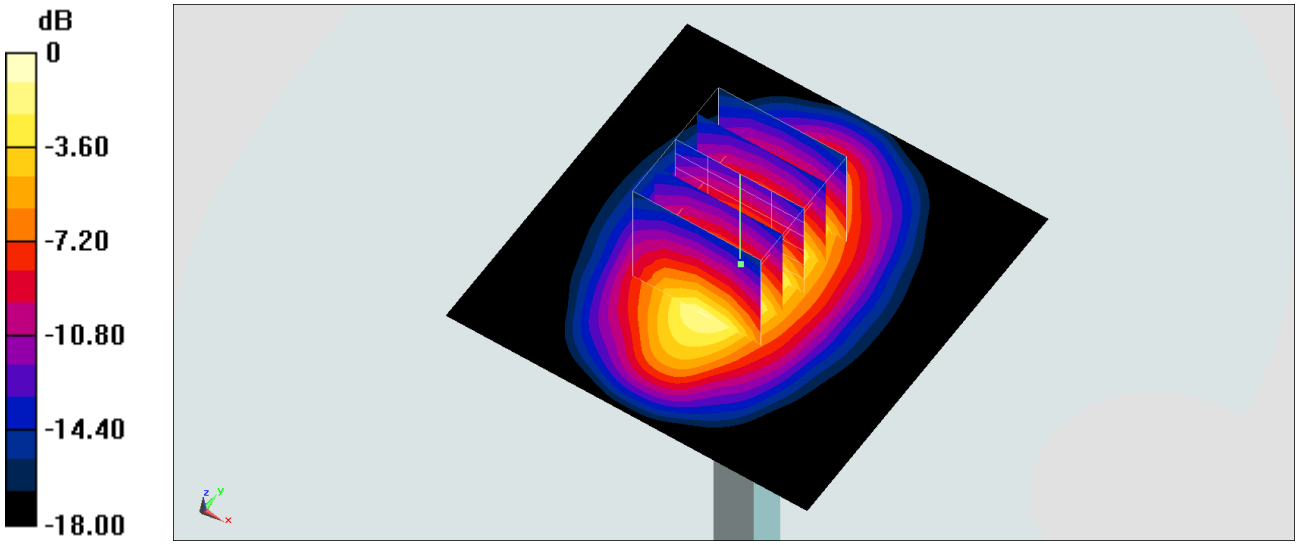

0 dB = 14.1 W/kg = 11.49 dBW/kg

System Check_Head_1900MHz

DUT: D1900V2-5d041

Communication System: CW; Frequency: 1900 MHz;Duty Cycle: 1:1
Medium: HSL_1900_190803 Medium parameters used: f = 1900 MHz; σ = 1.414 S/m; ε_r = 38.501; ρ = 1000 kg/m^3
Ambient Temperature：23.6 ℃; Liquid Temperature：22.6 ℃

DASY5 Configuration:
- Probe: ES3DV3 - SN3169; ConvF(5.14, 5.14, 5.14) @ 1900 MHz; Calibrated: 2019/5/24
- Sensor-Surface: 3mm (Mechanical Surface Detection)
- Electronics: DAE4 Sn1399; Calibrated: 2018/11/16
- Phantom: SAM_Left; Type: QD000P40CD; Serial: TP:1815
- Measurement SW: DASY52, Version 52.10 (2);SEMCAD X Version 14.6.12 (7470)

Pin=250mW/Area Scan (61x61x1): Interpolated grid: dx=1.500 mm, dy=1.500 mm
Maximum value of SAR (interpolated) = 12.7 W/kg

Pin=250mW/Zoom Scan (5x5x7)/Cube 0: Measurement grid: dx=8mm, dy=8mm, dz=5mm
Reference Value = 97.35 V/m; Power Drift = 0.04 dB
Peak SAR (extrapolated) = 18.3 W/kg
SAR(1 g) = 9.98 W/kg; SAR(10 g) = 5.17 W/kg
Maximum value of SAR (measured) = 12.5 W/kg

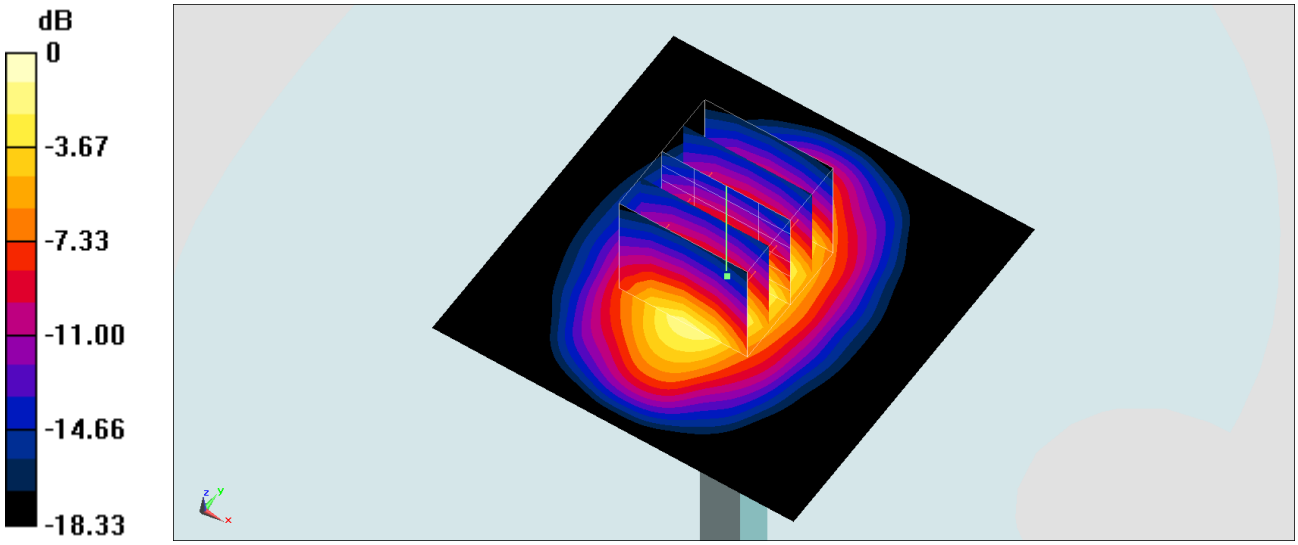

0 dB = 12.5 W/kg = 10.97 dBW/kg

System Check_Head_1900MHz

DUT: D1900V2-5d041

Communication System: CW; Frequency: 1900 MHz;Duty Cycle: 1:1
Medium: HSL_1900_190804 Medium parameters used: f = 1900 MHz; σ = 1.418 S/m; ε_r = 38.831; ρ = 1000 kg/m^3
Ambient Temperature：23.6 ℃; Liquid Temperature：22.6 ℃

DASY5 Configuration:
- Probe: ES3DV3 - SN3169; ConvF(5.14, 5.14, 5.14) @ 1900 MHz; Calibrated: 2019/5/24
- Sensor-Surface: 3mm (Mechanical Surface Detection)
- Electronics: DAE4 Sn1399; Calibrated: 2018/11/16
- Phantom: SAM_Left; Type: QD000P40CD; Serial: TP:1815
- Measurement SW: DASY52, Version 52.10 (2);SEMCAD X Version 14.6.12 (7470)

Pin=250mW/Area Scan (61x61x1): Interpolated grid: dx=1.500 mm, dy=1.500 mm
Maximum value of SAR (interpolated) = 13.7 W/kg

Pin=250mW/Zoom Scan (5x5x7)/Cube 0: Measurement grid: dx=8mm, dy=8mm, dz=5mm
Reference Value = 96.04 V/m; Power Drift = -0.02 dB
Peak SAR (extrapolated) = 18.5 W/kg
SAR(1 g) = 10.1 W/kg; SAR(10 g) = 5.29 W/kg
Maximum value of SAR (measured) = 12.6 W/kg

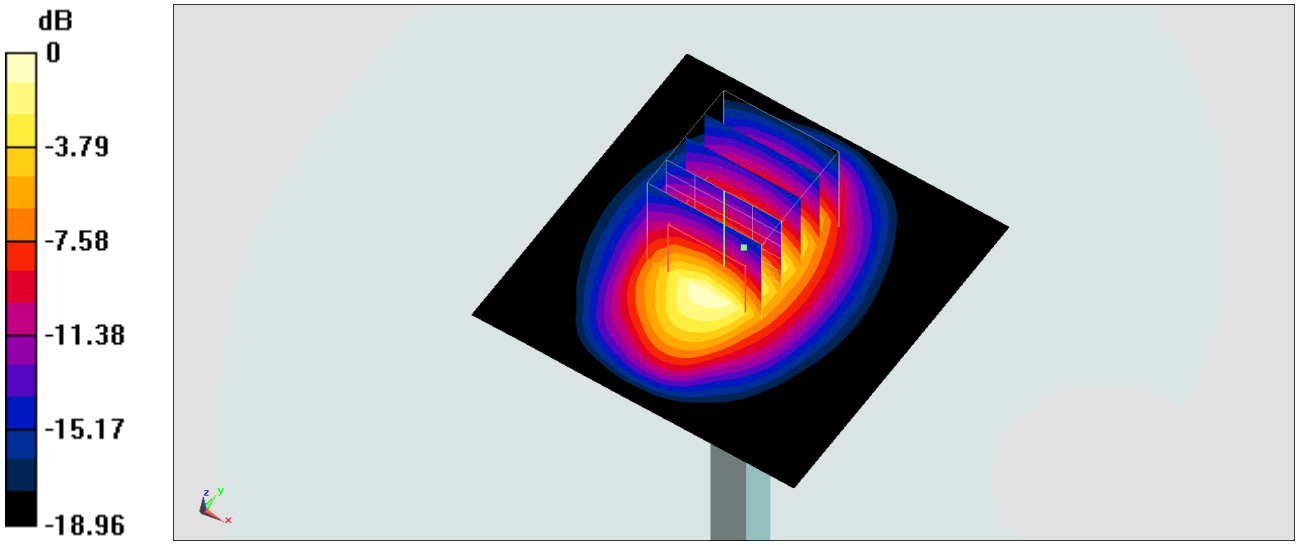

0 dB = 12.6 W/kg = 11.00 dBW/kg

System Check_Head_1900MHz

DUT: D1900V2-5d041

Communication System: CW; Frequency: 1900 MHz;Duty Cycle: 1:1
Medium: HSL_1900_190809 Medium parameters used: f = 1900 MHz; σ = 1.385 S/m; ε_r = 40.383; ρ = 1000 kg/m^3
Ambient Temperature：23.3 ℃; Liquid Temperature：22.3 ℃

DASY5 Configuration:
- Probe: EX3DV4 - SN3931; ConvF(8.33, 8.33, 8.33) @ 1900 MHz; Calibrated: 2018/9/27
- Sensor-Surface: 1.4mm (Mechanical Surface Detection)
- Electronics: DAE4 Sn1399; Calibrated: 2018/11/16
- Phantom: SAM_Left; Type: QD000P40CD; Serial: TP:1815
- Measurement SW: DASY52, Version 52.10 (2);SEMCAD X Version 14.6.12 (7470)

Pin=250mW/Area Scan (61x61x1): Interpolated grid: dx=1.500 mm, dy=1.500 mm
Maximum value of SAR (interpolated) = 17.2 W/kg

Pin=250mW/Zoom Scan (5x5x7)/Cube 0: Measurement grid: dx=8mm, dy=8mm, dz=5mm
Reference Value = 111.3 V/m; Power Drift = -0.06 dB
Peak SAR (extrapolated) = 20.2 W/kg
SAR(1 g) = 10.5 W/kg; SAR(10 g) = 5.42 W/kg
Maximum value of SAR (measured) = 16.5 W/kg

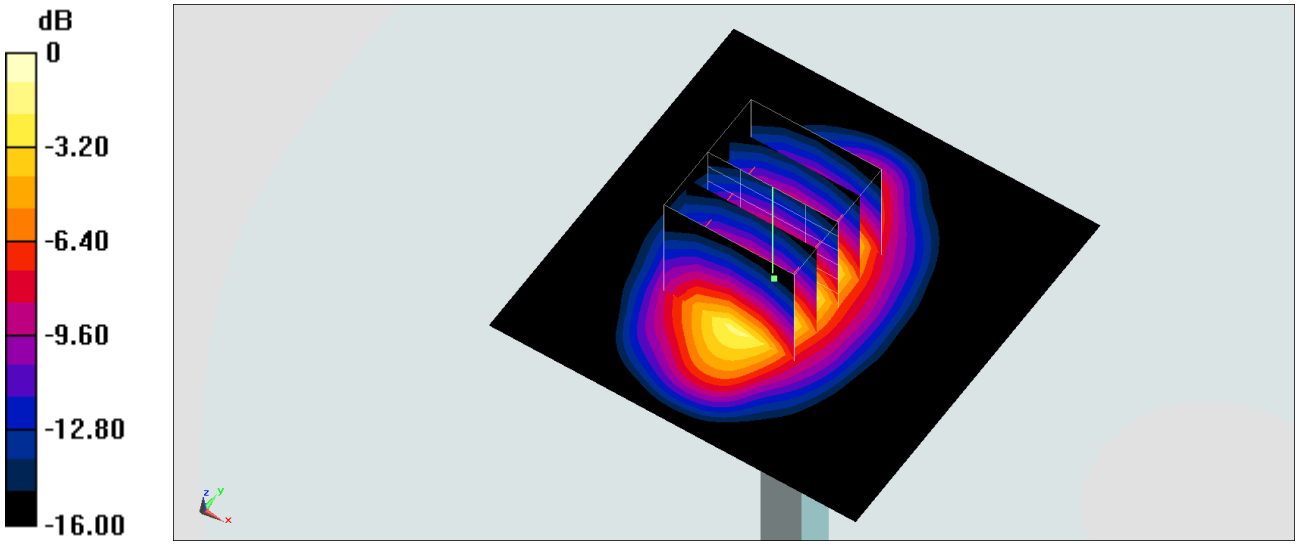

0 dB = 16.5 W/kg = 12.17 dBW/kg

System Check_Head_1900MHz

DUT: D1900V2-5d041

Communication System: CW; Frequency: 1900 MHz;Duty Cycle: 1:1
Medium: HSL_1900_190810 Medium parameters used: f = 1900 MHz; σ = 1.427 S/m; ε_r = 40.973; ρ = 1000 kg/m^3
Ambient Temperature：23.5 ℃; Liquid Temperature：22.5 ℃

DASY5 Configuration:
- Probe: EX3DV4 - SN3931; ConvF(8.33, 8.33, 8.33) @ 1900 MHz; Calibrated: 2018/9/27
- Sensor-Surface: 1.4mm (Mechanical Surface Detection)
- Electronics: DAE4 Sn1399; Calibrated: 2018/11/16
- Phantom: SAM_Left; Type: QD000P40CD; Serial: TP:1815
- Measurement SW: DASY52, Version 52.10 (2);SEMCAD X Version 14.6.12 (7470)

Pin=250mW/Area Scan (61x61x1): Interpolated grid: dx=1.500 mm, dy=1.500 mm
Maximum value of SAR (interpolated) = 17.5 W/kg

Pin=250mW/Zoom Scan (5x5x7)/Cube 0: Measurement grid: dx=8mm, dy=8mm, dz=5mm
Reference Value = 113.7 V/m; Power Drift = -0.17 dB
Peak SAR (extrapolated) = 21.1 W/kg
SAR(1 g) = 11 W/kg; SAR(10 g) = 5.73 W/kg
Maximum value of SAR (measured) = 17.2 W/kg

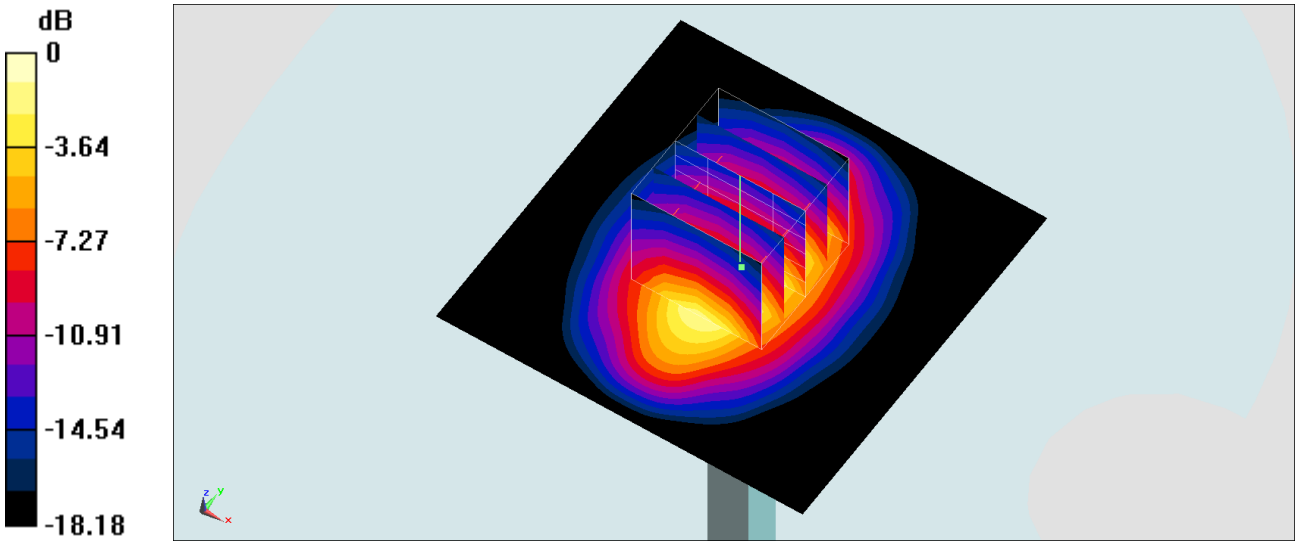

0 dB = 17.2 W/kg = 12.36 dBW/kg

System Check_Head_2450MHz

DUT: D2450V2-736

Communication System: CW; Frequency: 2450 MHz;Duty Cycle: 1:1
Medium: HSL_2450_190731 Medium parameters used : f = 2450 MHz; σ = 1.803 S/m; ε_r = 39.649; ρ = 1000 kg/m^3
Ambient Temperature：23.5 ℃; Liquid Temperature：22.5 ℃

DASY5 Configuration:
- Probe: EX3DV4 - SN3642; ConvF(7.32, 7.32, 7.32) @ 2450 MHz; Calibrated: 2019/4/29
- Sensor-Surface: 1.4mm (Mechanical Surface Detection)
- Electronics: DAE3 Sn360; Calibrated: 2018/10/29
- Phantom: SAM LEFT; Type: QD000P40CD; Serial: TP:1718
- Measurement SW: DASY52, Version 52.10 (2);SEMCAD X Version 14.6.12 (7470)

Pin=250mW/Area Scan (71x71x1): Interpolated grid: dx=1.200 mm, dy=1.200 mm
Maximum value of SAR (interpolated) = 23.4 W/kg

Pin=250mW/Zoom Scan (7x7x7)/Cube 0: Measurement grid: dx=5mm, dy=5mm, dz=5mm
Reference Value = 115.4 V/m; Power Drift = 0.04 dB
Peak SAR (extrapolated) = 28.5 W/kg
SAR(1 g) = 13.5 W/kg; SAR(10 g) = 6.23 W/kg
Maximum value of SAR (measured) = 23.0 W/kg

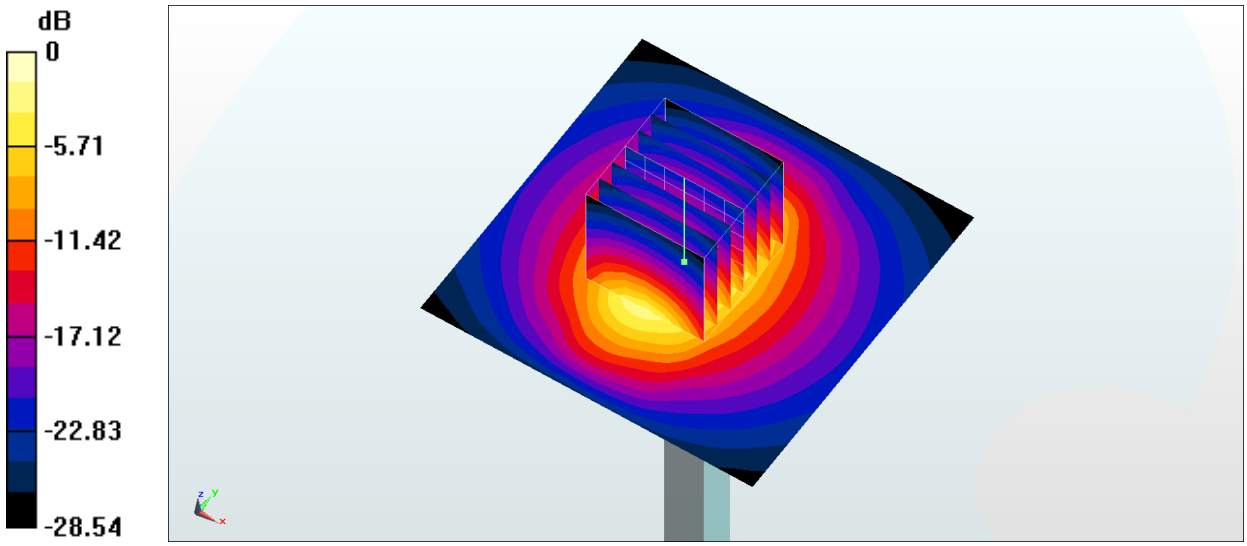

0 dB = 23.4 W/kg = 13.69 dBW/kg

System Check_Head_2450MHz

DUT: D2450V2-736

Communication System: CW; Frequency: 2450 MHz;Duty Cycle: 1:1
Medium: HSL_2450_190806 Medium parameters used: f = 2450 MHz; σ = 1.794 S/m; ε_r = 39.865; ρ = 1000 kg/m^3
Ambient Temperature：23.8 ℃; Liquid Temperature：22.8 ℃

DASY5 Configuration:
- Probe: EX3DV4 - SN3931; ConvF(7.54, 7.54, 7.54) @ 2450 MHz; Calibrated: 2018/9/27
- Sensor-Surface: 1.4mm (Mechanical Surface Detection)
- Electronics: DAE4 Sn1399; Calibrated: 2018/11/16
- Phantom: SAM_Right; Type: SAM; Serial: TP:1446
- Measurement SW: DASY52, Version 52.10 (2);SEMCAD X Version 14.6.12 (7470)

Pin=250mW/Area Scan (71x71x1): Interpolated grid: dx=1.200 mm, dy=1.200 mm
Maximum value of SAR (interpolated) = 23.9 W/kg

Pin=250mW/Zoom Scan (7x7x7)/Cube 0: Measurement grid: dx=5mm, dy=5mm, dz=5mm
Reference Value = 118.1 V/m; Power Drift = -0.15 dB
Peak SAR (extrapolated) = 29.4 W/kg
SAR(1 g) = 13.8 W/kg; SAR(10 g) = 6.28 W/kg
Maximum value of SAR (measured) = 23.5 W/kg

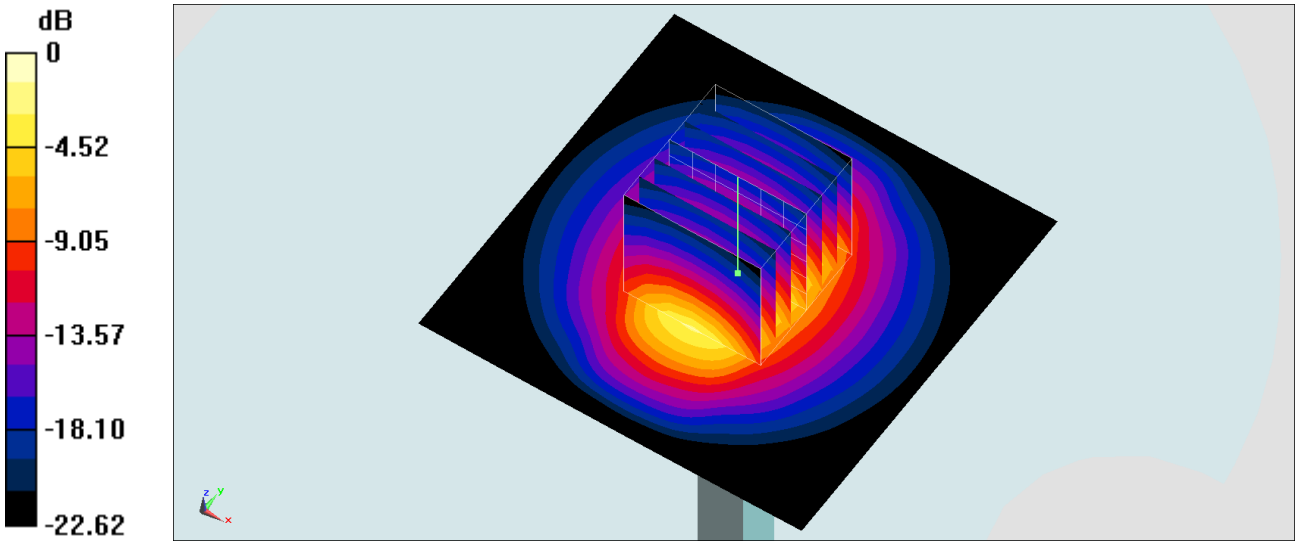

0 dB = 23.5 W/kg = 13.71 dBW/kg

System Check_Head_2600MHz

DUT: D2600V2-1078

Communication System: CW; Frequency: 2600 MHz;Duty Cycle: 1:1
Medium: HSL_2600_190805 Medium parameters used: f = 2600 MHz; σ = 1.967 S/m; ε_r = 38.722; ρ = 1000 kg/m^3
Ambient Temperature：23.6 ℃; Liquid Temperature：22.6 ℃

DASY5 Configuration:
- Probe: ES3DV3 - SN3169; ConvF(4.38, 4.38, 4.38) @ 2600 MHz; Calibrated: 2019/5/24
- Sensor-Surface: 3mm (Mechanical Surface Detection)
- Electronics: DAE4 Sn1399; Calibrated: 2018/11/16
- Phantom: SAM_Right; Type: SAM; Serial: TP:1446
- Measurement SW: DASY52, Version 52.10 (2);SEMCAD X Version 14.6.12 (7470)

Pin=250mW/Area Scan (81x81x1): Interpolated grid: dx=1.200 mm, dy=1.200 mm
Maximum value of SAR (interpolated) = 18.3 W/kg

Pin=250mW/Zoom Scan (7x7x7)/Cube 0: Measurement grid: dx=5mm, dy=5mm, dz=5mm
Reference Value = 98.65 V/m; Power Drift = 0.07 dB
Peak SAR (extrapolated) = 29.6 W/kg
SAR(1 g) = 13.6 W/kg; SAR(10 g) = 6.14 W/kg
Maximum value of SAR (measured) = 18.3 W/kg

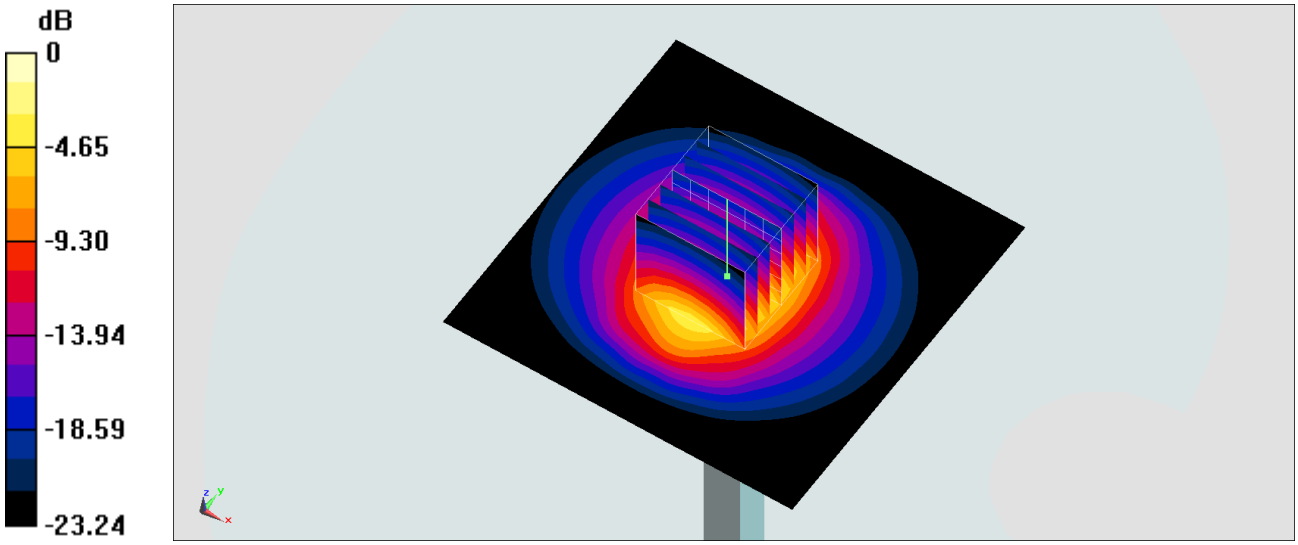

0 dB = 18.3 W/kg = 12.62 dBW/kg

System Check_Head_2600MHz

DUT: D2600V2-1078

Communication System: CW ; Frequency: 2600 MHz;Duty Cycle: 1:1
Medium: HSL_2600_190810 Medium parameters used: f = 2600 MHz; σ = 1.973 S/m; ε_r = 38.349; ρ = 1000 kg/m^3
Ambient Temperature：23.3 ℃; Liquid Temperature：22.3 ℃

DASY5 Configuration:
- Probe: EX3DV4 - SN3931; ConvF(7.3, 7.3, 7.3) @ 2600 MHz; Calibrated: 2018/9/27
- Sensor-Surface: 1.4mm (Mechanical Surface Detection)
- Electronics: DAE4 Sn1399; Calibrated: 2018/11/16
- Phantom: SAM_Right; Type: SAM; Serial: TP:1446
- Measurement SW: DASY52, Version 52.10 (2);SEMCAD X Version 14.6.12 (7470)

Pin=250mW/Area Scan (61x61x1): Interpolated grid: dx=1.200 mm, dy=1.200 mm
Maximum value of SAR (interpolated) = 26.3 W/kg

Pin=250mW/Zoom Scan (7x7x7)/Cube 0: Measurement grid: dx=5mm, dy=5mm, dz=5mm
Reference Value = 124.8 V/m; Power Drift = -0.13 dB
Peak SAR (extrapolated) = 32.1 W/kg
SAR(1 g) = 14.5 W/kg; SAR(10 g) = 6.5 W/kg
Maximum value of SAR (measured) = 25.2 W/kg

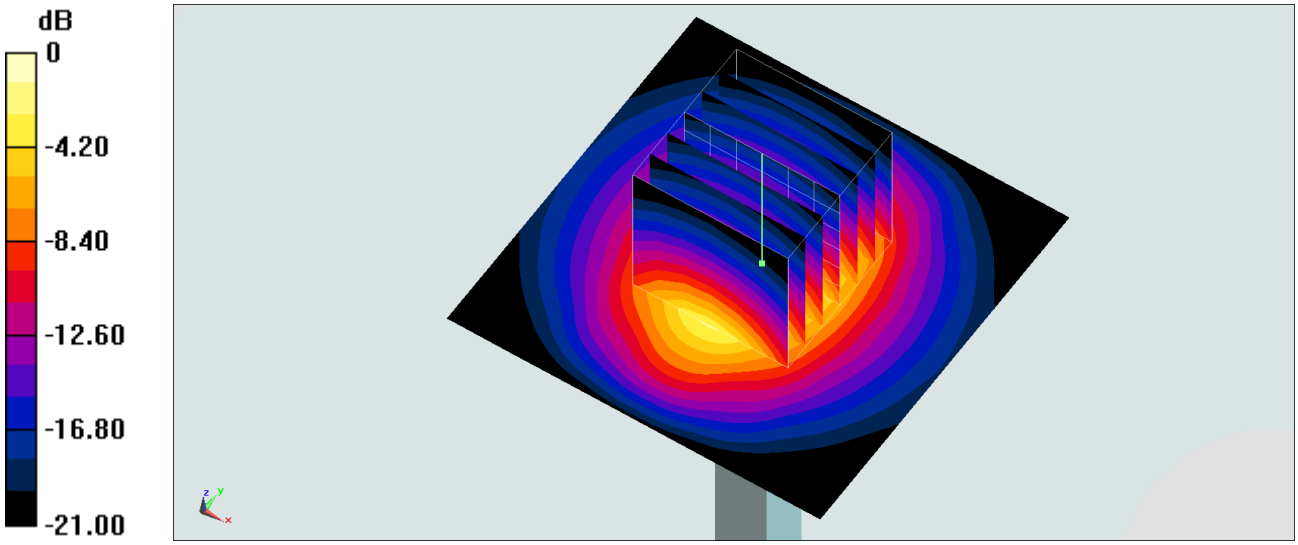

0 dB = 25.2 W/kg = 14.01 dBW/kg

System Check_Head_5250MHz

DUT: D5GHzV2-1006

Communication System: CW; Frequency: 5250 MHz;Duty Cycle: 1:1
Medium: HSL_5G_190807 Medium parameters used: f = 5250 MHz; σ = 4.711 S/m; ε_r = 36.053; ρ = 1000 kg/m^3
Ambient Temperature：23.5 ℃; Liquid Temperature：22.5 ℃

DASY5 Configuration:
- Probe: EX3DV4 - SN3931; ConvF(5.12, 5.12, 5.12) @ 5250 MHz; Calibrated: 2018/9/27
- Sensor-Surface: 1.4mm (Mechanical Surface Detection)
- Electronics: DAE4 Sn1399; Calibrated: 2018/11/16
- Phantom: SAM_Left; Type: QD000P40CD; Serial: TP:1815
- Measurement SW: DASY52, Version 52.10 (2);SEMCAD X Version 14.6.12 (7470)

Pin=100mW/Area Scan (71x71x1): Interpolated grid: dx=1.000 mm, dy=1.000 mm
Maximum value of SAR (interpolated) = 19.2 W/kg

Pin=100mW/Zoom Scan (7x7x7)/Cube 0: Measurement grid: dx=4mm, dy=4mm, dz=1.4mm
Reference Value = 70.85 V/m; Power Drift = -0.11 dB
Peak SAR (extrapolated) = 32.4 W/kg
SAR(1 g) = 8.13 W/kg; SAR(10 g) = 2.31 W/kg
Maximum value of SAR (measured) = 20.6 W/kg

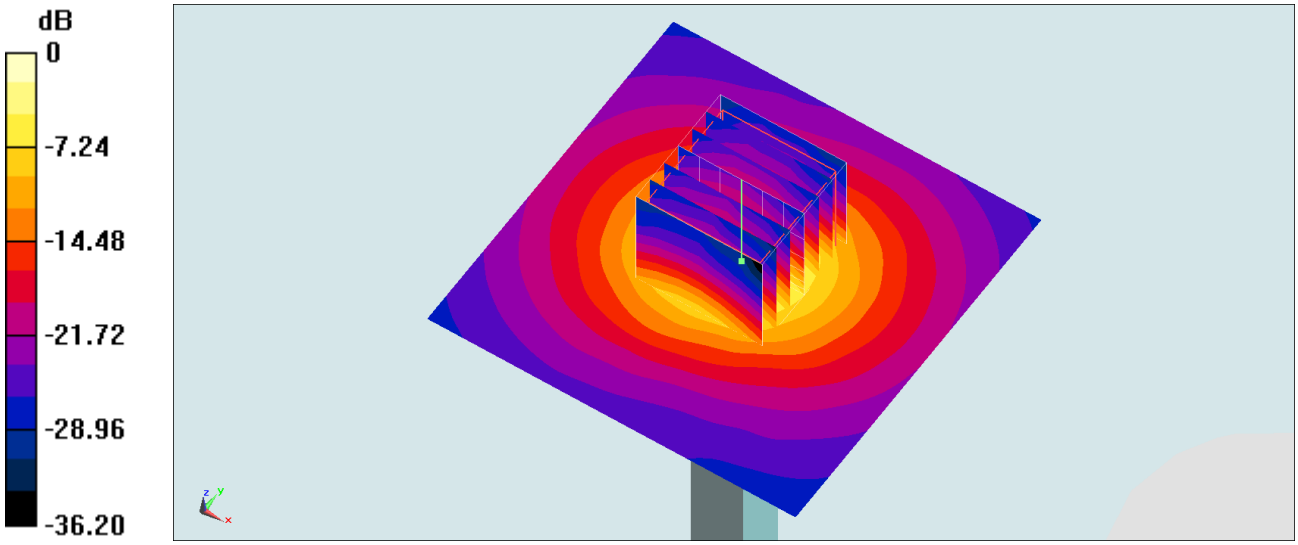

0 dB = 20.6 W/kg = 13.14 dBW/kg

System Check_Head_5250MHz

DUT: D5GHzV2-1006

Communication System: CW; Frequency: 5250 MHz;Duty Cycle: 1:1
Medium: HSL_5G_190808 Medium parameters used: f = 5250 MHz; σ = 4.721 S/m; ε_r = 36.625; ρ = 1000 kg/m^3
Ambient Temperature：23.4 ℃; Liquid Temperature：22.4 ℃

DASY5 Configuration:
- Probe: EX3DV4 - SN3931; ConvF(5.12, 5.12, 5.12) @ 5250 MHz; Calibrated: 2018/9/27
- Sensor-Surface: 1.4mm (Mechanical Surface Detection)
- Electronics: DAE4 Sn1399; Calibrated: 2018/11/16
- Phantom: SAM_Left; Type: QD000P40CD; Serial: TP:1815
- Measurement SW: DASY52, Version 52.10 (2);SEMCAD X Version 14.6.12 (7470)

Pin=100mW/Area Scan (71x71x1): Interpolated grid: dx=1.000 mm, dy=1.000 mm
Maximum value of SAR (interpolated) = 20.4 W/kg

Pin=100mW/Zoom Scan (7x7x7)/Cube 0: Measurement grid: dx=4mm, dy=4mm, dz=1.4mm
Reference Value = 69.45 V/m; Power Drift = -0.07 dB
Peak SAR (extrapolated) = 30.7 W/kg
SAR(1 g) = 7.95 W/kg; SAR(10 g) = 2.24 W/kg
Maximum value of SAR (measured) = 18.7 W/kg

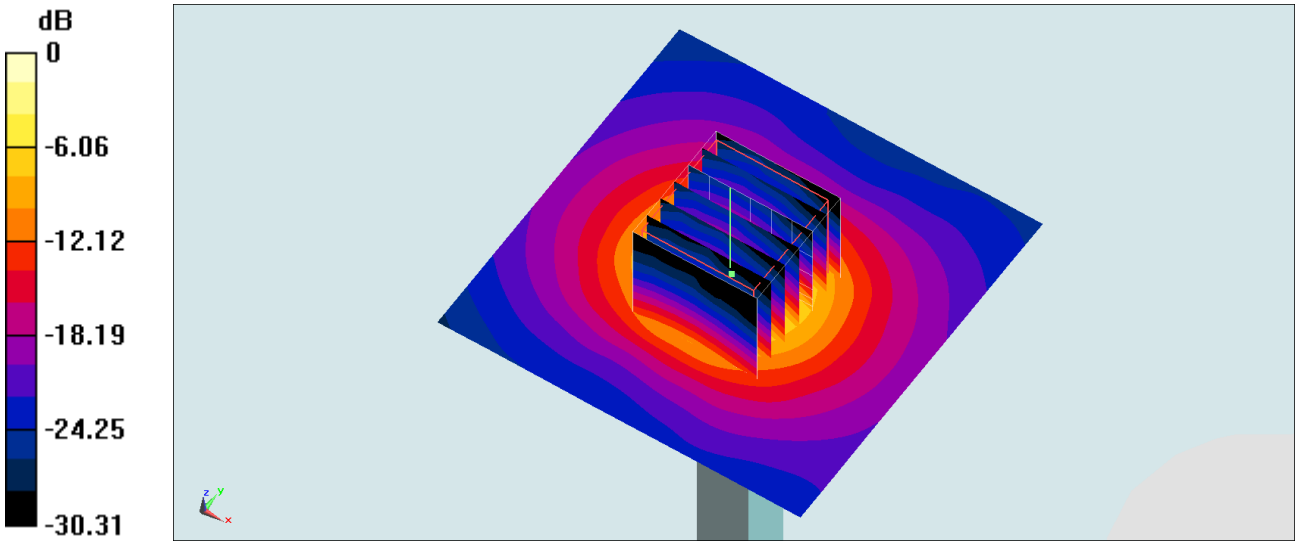

0 dB = 18.7 W/kg = 12.72 dBW/kg

System Check_Head_5250MHz

DUT: D5GHzV2-1006

Communication System: CW; Frequency: 5250 MHz;Duty Cycle: 1:1
Medium: HSL_5G_190814 Medium parameters used : f = 5250 MHz; σ = 4.573 S/m; ε_r = 37.298; ρ = 1000 kg/m^3
Ambient Temperature：23.3 ℃; Liquid Temperature：22.3 ℃

DASY5 Configuration:
- Probe: EX3DV4 - SN3931; ConvF(5.12, 5.12, 5.12) @ 5250 MHz; Calibrated: 2018/9/27
- Sensor-Surface: 1.4mm (Mechanical Surface Detection)
- Electronics: DAE4 Sn1399; Calibrated: 2018/11/16
- Phantom: SAM_Right; Type: SAM; Serial: TP:1446
- Measurement SW: DASY52, Version 52.10 (2);SEMCAD X Version 14.6.12 (7450)

Pin=100mW/Area Scan (71x71x1): Interpolated grid: dx=1.000 mm, dy=1.000 mm
Maximum value of SAR (interpolated) = 18.7 W/kg

Pin=100mW/Zoom Scan (7x7x7)/Cube 0: Measurement grid: dx=4mm, dy=4mm, dz=1.4mm
Reference Value = 70.85 V/m; Power Drift = -0.11 dB
Peak SAR (extrapolated) = 31.4 W/kg
SAR(1 g) = 7.89 W/kg; SAR(10 g) = 2.24 W/kg
Maximum value of SAR (measured) = 20.0 W/kg

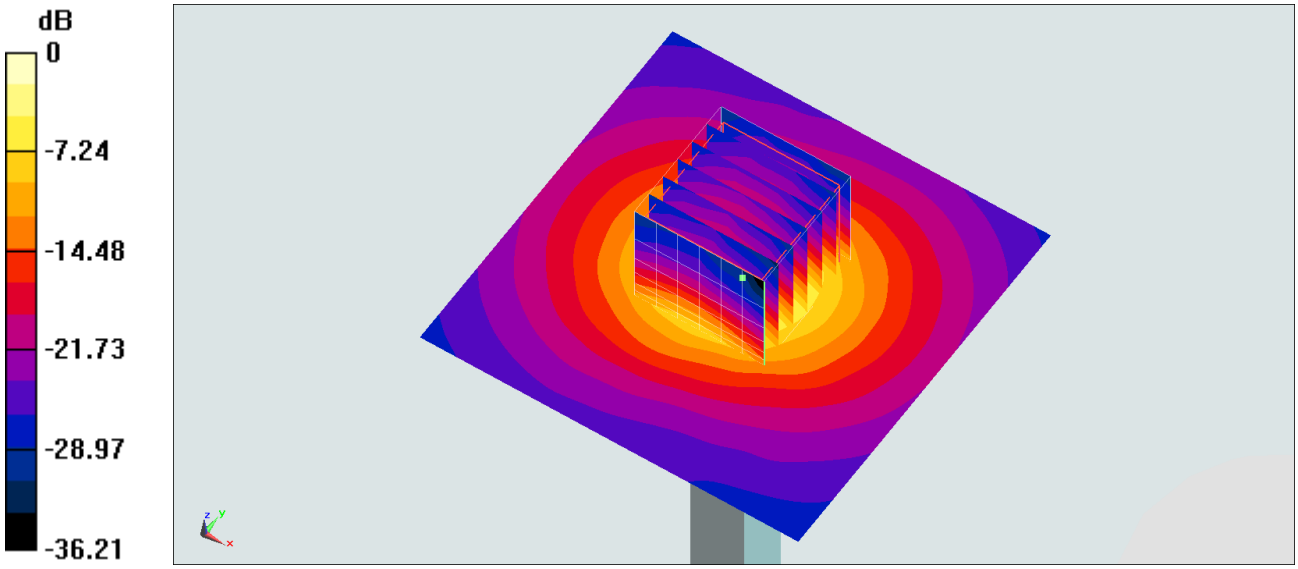

0 dB = 20.0 W/kg = 13.01 dBW/kg

System Check_Head_5600MHz

DUT: D5GHzV2-1006

Communication System: CW; Frequency: 5600 MHz;Duty Cycle: 1:1
Medium: HSL_5G_190807 Medium parameters used: f = 5600 MHz; σ = 5.071 S/m; ε_r = 35.607; ρ = 1000 kg/m^3
Ambient Temperature：23.5 ℃; Liquid Temperature：22.5 ℃

DASY5 Configuration:
- Probe: EX3DV4 - SN3931; ConvF(4.47, 4.47, 4.47) @ 5600 MHz; Calibrated: 2018/9/27
- Sensor-Surface: 1.4mm (Mechanical Surface Detection)
- Electronics: DAE4 Sn1399; Calibrated: 2018/11/16
- Phantom: SAM_Left; Type: QD000P40CD; Serial: TP:1815
- Measurement SW: DASY52, Version 52.10 (2);SEMCAD X Version 14.6.12 (7470)

Pin=100mW/Area Scan (71x71x1): Interpolated grid: dx=1.000 mm, dy=1.000 mm
Maximum value of SAR (interpolated) = 22.3 W/kg

Pin=100mW/Zoom Scan (7x7x7)/Cube 0: Measurement grid: dx=4mm, dy=4mm, dz=1.4mm
Reference Value = 75.19 V/m; Power Drift = -0.03 dB
Peak SAR (extrapolated) = 38.8 W/kg
SAR(1 g) = 8.4 W/kg; SAR(10 g) = 2.33 W/kg
Maximum value of SAR (measured) = 23.5 W/kg

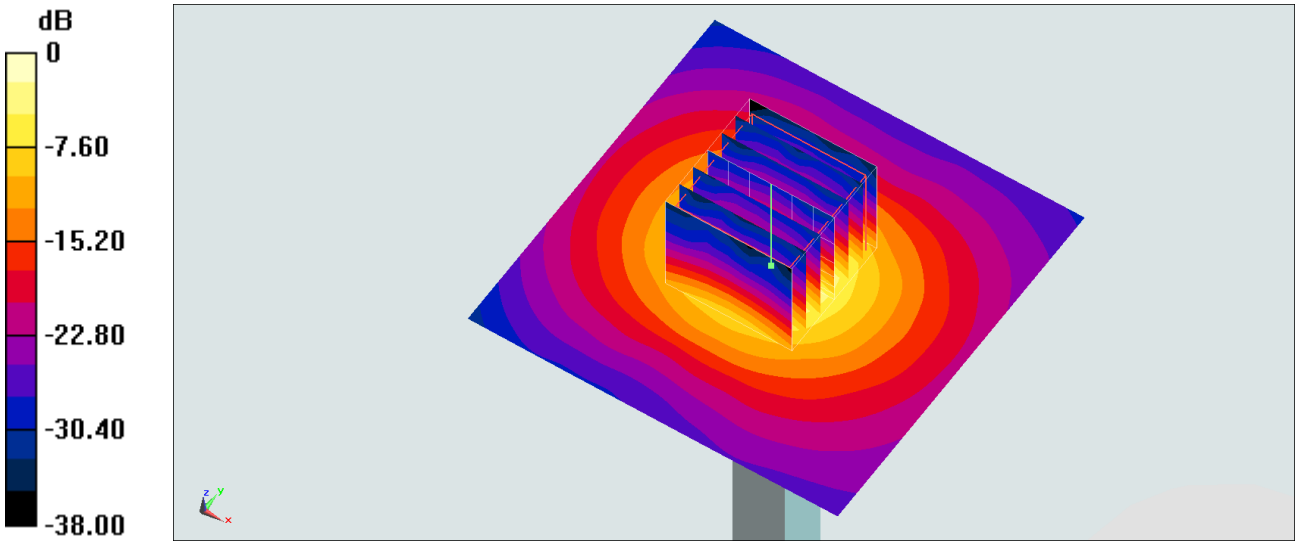

0 dB = 23.5 W/kg = 13.71 dBW/kg

System Check_Head_5600MHz

DUT: D5GHzV2-1006

Communication System: CW; Frequency: 5600 MHz;Duty Cycle: 1:1
Medium: HSL_5G_190808 Medium parameters used: f = 5600 MHz; σ = 5.083 S/m; ε_r = 36.149; ρ = 1000 kg/m^3
Ambient Temperature：23.4 ℃; Liquid Temperature：22.4 ℃

DASY5 Configuration:
- Probe: EX3DV4 - SN3931; ConvF(4.47, 4.47, 4.47) @ 5600 MHz; Calibrated: 2018/9/27
- Sensor-Surface: 1.4mm (Mechanical Surface Detection)
- Electronics: DAE4 Sn1399; Calibrated: 2018/11/16
- Phantom: SAM_Left; Type: QD000P40CD; Serial: TP:1815
- Measurement SW: DASY52, Version 52.10 (2);SEMCAD X Version 14.6.12 (7470)

Pin=100mW/Area Scan (71x71x1): Interpolated grid: dx=1.000 mm, dy=1.000 mm
Maximum value of SAR (interpolated) = 21.8 W/kg

Pin=100mW/Zoom Scan (7x7x7)/Cube 0: Measurement grid: dx=4mm, dy=4mm, dz=1.4mm
Reference Value = 72.28 V/m; Power Drift = 0.13 dB
Peak SAR (extrapolated) = 36.5 W/kg
SAR(1 g) = 8.75 W/kg; SAR(10 g) = 2.47 W/kg
Maximum value of SAR (measured) = 21.6 W/kg

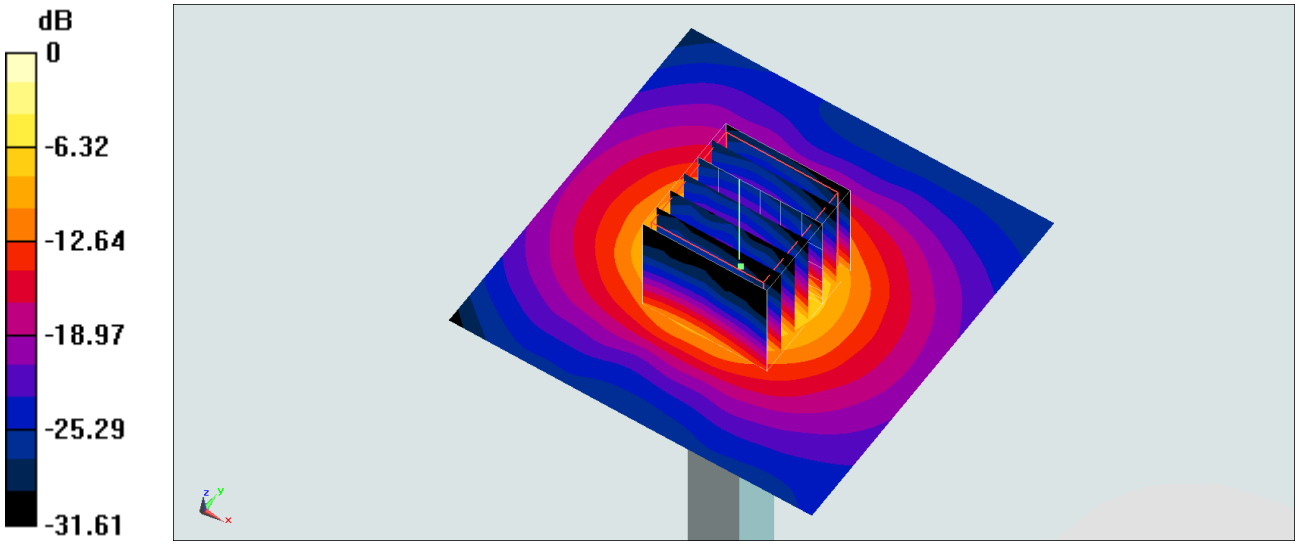

0 dB = 21.6 W/kg = 13.34 dBW/kg

System Check_Head_5600MHz

DUT: D5GHzV2-1006

Communication System: CW; Frequency: 5600 MHz;Duty Cycle: 1:1
Medium: HSL_5G_190814 Medium parameters used: f = 5600 MHz; σ = 4.924 S/m; ε_r = 36.825; ρ = 1000 kg/m^3
Ambient Temperature：23.3 ℃; Liquid Temperature：22.3 ℃

DASY5 Configuration:
- Probe: EX3DV4 - SN3931; ConvF(4.47, 4.47, 4.47) @ 5600 MHz; Calibrated: 2018/9/27
- Sensor-Surface: 1.4mm (Mechanical Surface Detection)
- Electronics: DAE4 Sn1399; Calibrated: 2018/11/16
- Phantom: SAM_Right; Type: SAM; Serial: TP:1446
- Measurement SW: DASY52, Version 52.10 (2);SEMCAD X Version 14.6.12 (7450)

Pin=100mW/Area Scan (71x71x1): Interpolated grid: dx=1.000 mm, dy=1.000 mm
Maximum value of SAR (interpolated) = 21.7 W/kg

Pin=100mW/Zoom Scan (7x7x7)/Cube 0: Measurement grid: dx=4mm, dy=4mm, dz=1.4mm
Reference Value = 75.19 V/m; Power Drift = -0.03 dB
Peak SAR (extrapolated) = 37.7 W/kg
SAR(1 g) = 8.83 W/kg; SAR(10 g) = 2.55 W/kg
Maximum value of SAR (measured) = 22.8 W/kg

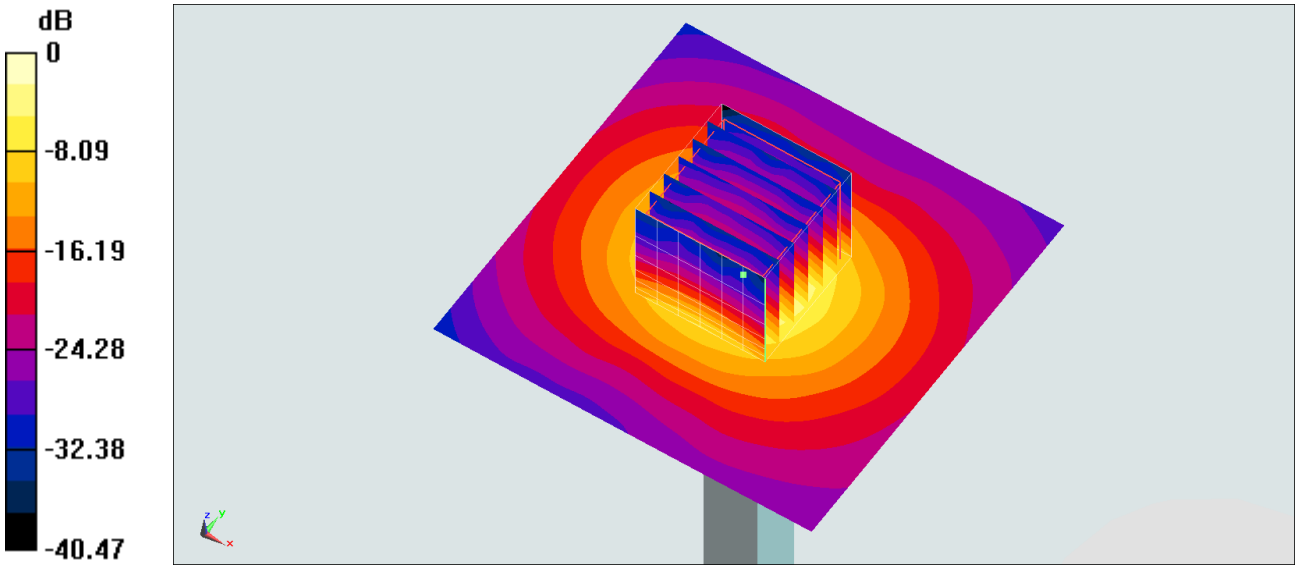

0 dB = 22.8 W/kg = 13.58 dBW/kg

System Check_Head_5750MHz

DUT: D5GHzV2-1006

Communication System: CW; Frequency: 5750 MHz;Duty Cycle: 1:1
Medium: HSL_5G_190807 Medium parameters used: f = 5750 MHz; σ = 5.22 S/m; ε_r = 35.456; ρ = 1000 kg/m^3
Ambient Temperature：23.5 ℃; Liquid Temperature：22.5 ℃

DASY5 Configuration:
- Probe: EX3DV4 - SN3931; ConvF(4.72, 4.72, 4.72) @ 5750 MHz; Calibrated: 2018/9/27
- Sensor-Surface: 1.4mm (Mechanical Surface Detection)
- Electronics: DAE4 Sn1399; Calibrated: 2018/11/16
- Phantom: SAM_Left; Type: QD000P40CD; Serial: TP:1815
- Measurement SW: DASY52, Version 52.10 (2);SEMCAD X Version 14.6.12 (7470)

Pin=100mW/Area Scan (71x71x1): Interpolated grid: dx=1.000 mm, dy=1.000 mm
Maximum value of SAR (interpolated) = 20.9 W/kg

Pin=100mW/Zoom Scan (7x7x7)/Cube 0: Measurement grid: dx=4mm, dy=4mm, dz=1.4mm
Reference Value = 71.65 V/m; Power Drift = -0.07 dB
Peak SAR (extrapolated) = 37.6 W/kg
SAR(1 g) = 8.38 W/kg; SAR(10 g) = 2.41 W/kg
Maximum value of SAR (measured) = 22.0 W/kg

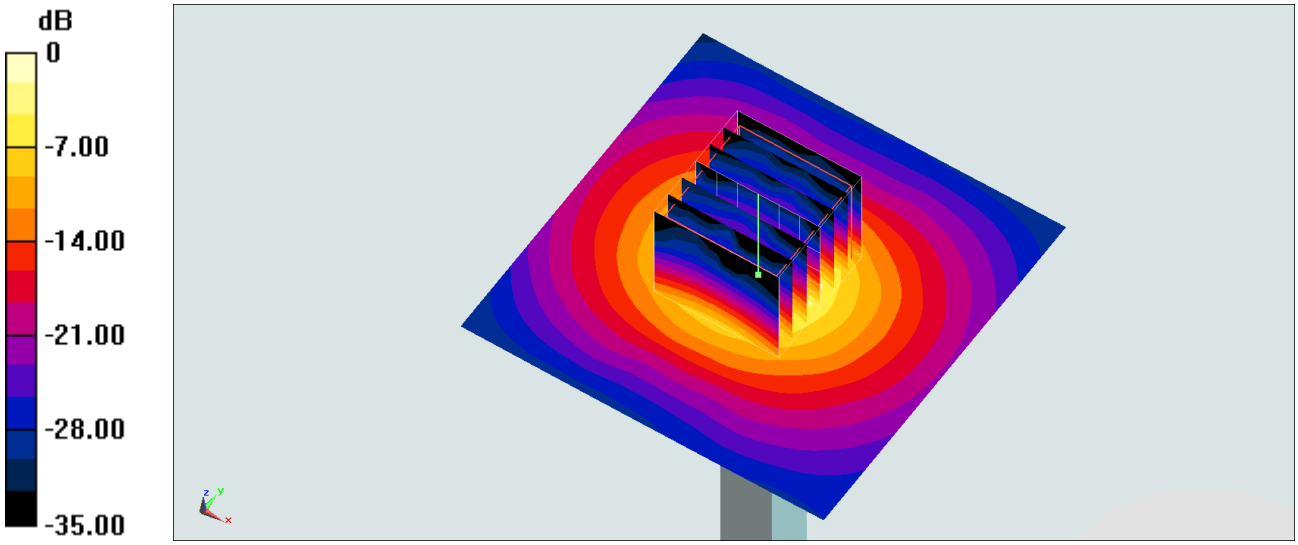

0 dB = 22.0 W/kg = 13.42 dBW/kg

System Check_Head_5750MHz

DUT: D5GHzV2-1006

Communication System: CW; Frequency: 5750 MHz;Duty Cycle: 1:1
Medium: HSL_5G_190808 Medium parameters used: f = 5750 MHz; σ = 5.246 S/m; ε_r = 35.932; ρ = 1000 kg/m^3
Ambient Temperature：23.4 ℃; Liquid Temperature：22.4 ℃

DASY5 Configuration:
- Probe: EX3DV4 - SN3931; ConvF(4.72, 4.72, 4.72) @ 5750 MHz; Calibrated: 2018/9/27
- Sensor-Surface: 1.4mm (Mechanical Surface Detection)
- Electronics: DAE4 Sn1399; Calibrated: 2018/11/16
- Phantom: SAM_Left; Type: QD000P40CD; Serial: TP:1815
- Measurement SW: DASY52, Version 52.10 (2);SEMCAD X Version 14.6.12 (7470)

Pin=100mW/Area Scan (71x71x1): Interpolated grid: dx=1.000 mm, dy=1.000 mm
Maximum value of SAR (interpolated) = 21.6 W/kg

Pin=100mW/Zoom Scan (7x7x7)/Cube 0: Measurement grid: dx=4mm, dy=4mm, dz=1.4mm
Reference Value = 72.75 V/m; Power Drift = 0.10 dB
Peak SAR (extrapolated) = 40.3 W/kg
SAR(1 g) = 8.55 W/kg; SAR(10 g) = 2.38 W/kg
Maximum value of SAR (measured) = 21.5 W/kg

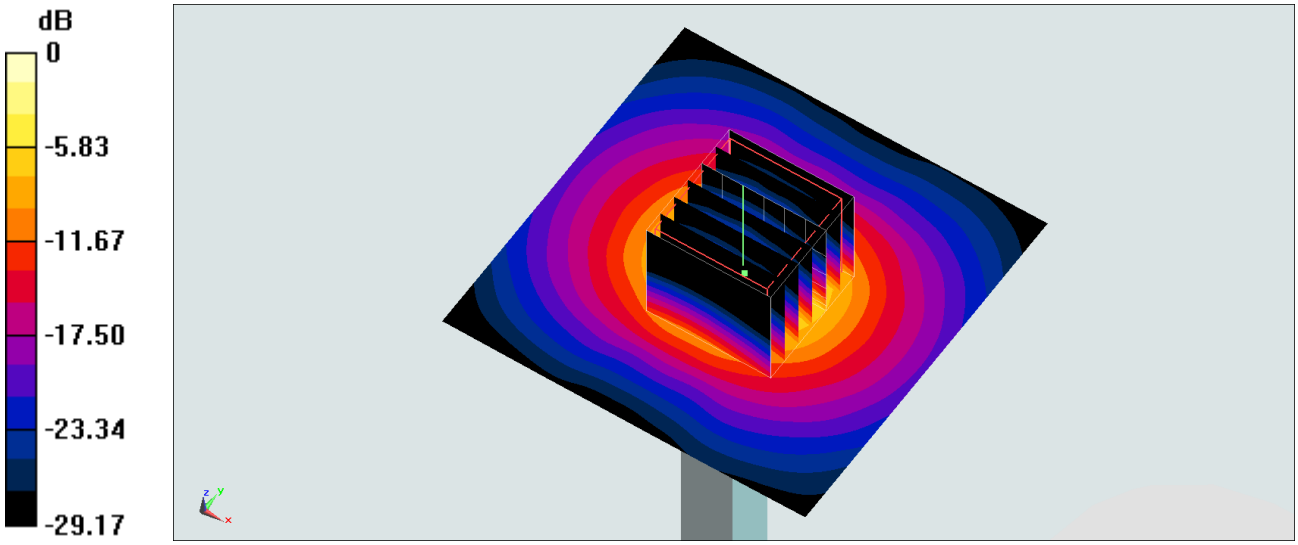

0 dB = 21.5 W/kg = 13.32 dBW/kg

System Check_Head_5750MHz

DUT: D5GHzV2-1006

Communication System: CW; Frequency: 5750 MHz;Duty Cycle: 1:1
Medium: HSL_5G_190814 Medium parameters used: f = 5750 MHz; σ = 5.071 S/m; ε_r = 36.577; ρ = 1000 kg/m^3
Ambient Temperature：23.3 ℃; Liquid Temperature：22.3 ℃

DASY5 Configuration:
- Probe: EX3DV4 - SN3931; ConvF(4.72, 4.72, 4.72) @ 5750 MHz; Calibrated: 2018/9/27
- Sensor-Surface: 1.4mm (Mechanical Surface Detection)
- Electronics: DAE4 Sn1399; Calibrated: 2018/11/16
- Phantom: SAM_Right; Type: SAM; Serial: TP:1446
- Measurement SW: DASY52, Version 52.10 (2);SEMCAD X Version 14.6.12 (7450)

Pin=100mW/Area Scan (71x71x1): Interpolated grid: dx=1.000 mm, dy=1.000 mm
Maximum value of SAR (interpolated) = 20.3 W/kg

Pin=100mW/Zoom Scan (7x7x7)/Cube 0: Measurement grid: dx=4mm, dy=4mm, dz=1.4mm
Reference Value = 71.65 V/m; Power Drift = -0.07 dB
Peak SAR (extrapolated) = 36.5 W/kg
SAR(1 g) = 8.15 W/kg; SAR(10 g) = 2.34 W/kg
Maximum value of SAR (measured) = 21.4 W/kg

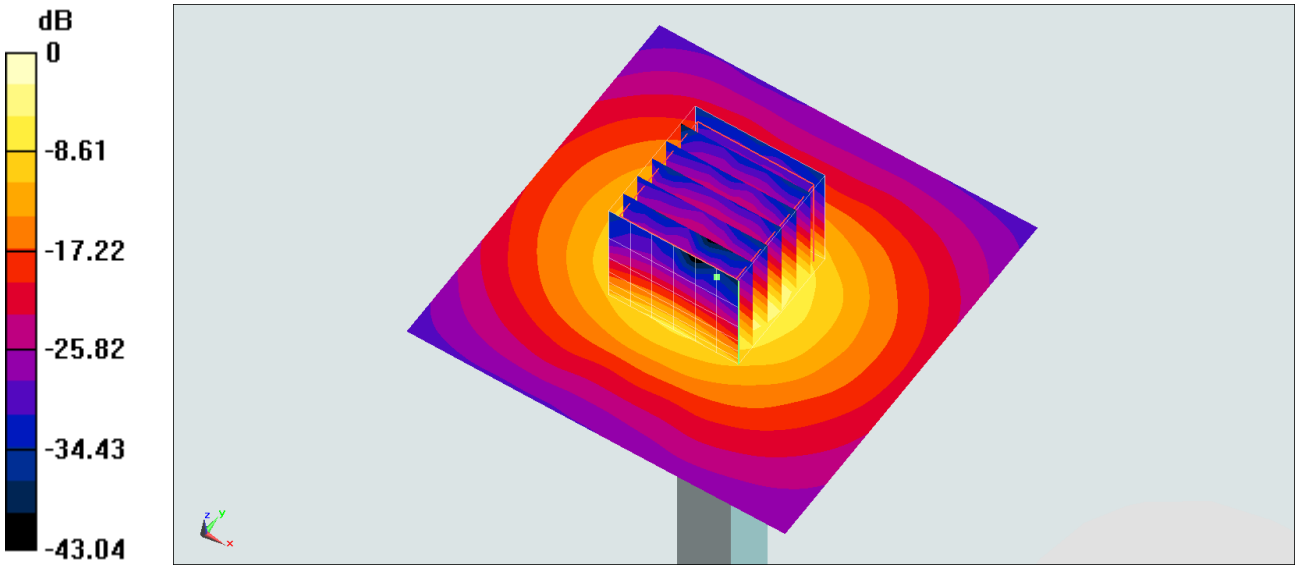

0 dB = 21.4 W/kg = 13.30 dBW/kg