FCC RF Test Report

APPLICANT	:	**Motorola Mobility LLC**
EQUIPMENT	:	**Mobile Cellular Phone**
BRAND NAME	:	**Motorola**
MODEL NAME	:	**XT2045-3**
FCC ID	:	**IHDT56YK1**
STANDARD	:	**47 CFR Part 2, and 90(S)**
CLASSIFICATION	:	**PCS Licensed Transmitter Held to Ear (PCE)**

The product was received on Jan. 04, 2020 and completely tested on Mar. 13, 2020. We, Sporton International (Kunshan) Inc., would like to declare that the tested sample has been evaluated in accordance with the procedures given in ANSI C63.26-2015 and shown compliance with the applicable technical standards.

The test results in this report apply exclusively to the tested model / sample. Without written approval of Sporton International (Kunshan) Inc., the test report shall not be reproduced except in full.

Jason Jia

Reviewed by: Jason Jia / Supervisor

James Huang

Approved by: James Huang / Manager

ACCREDITED Cert #5145.02

Sporton International (Kunshan) Inc.

No. 1098, Pengxi North Road, Kunshan Economic Development Zone Jiangsu Province 215300 People's Republic of China

TABLE OF CONTENTS

REVISION HISTORY **3**

SUMMARY OF TEST RESULT **4**

1 GENERAL DESCRIPTION **5**

1.1 Applicant 5
1.2 Manufacturer 5
1.3 Feature of Equipment Under Test 5
1.4 Product Specification of Equipment Under Test 5
1.5 Modification of EUT 6
1.6 Specification of Accessory 6
1.7 Maximum Conducted Power, Frequency Tolerance and Emission Designator 6
1.8 Testing Site 7
1.9 Test Software 7
1.10 Applied Standards 7

2 TEST CONFIGURATION OF EQUIPMENT UNDER TEST **8**

2.1 Test Mode 8
2.2 Connection Diagram of Test System 9
2.3 Support Unit used in test configuration and system 9
2.4 Measurement Results Explanation Example 9
2.5 Frequency List of Low/Middle/High Channels 10

3 TEST RESULT **11**

3.1 Conducted Output Power Measurement 11
3.2 99% Occupied Bandwidth and 26dB Bandwidth Measurement 12
3.3 Emissions Mask Measurement 13
3.4 Emissions Mask – Out Of Band Emissions Measurement 15
3.5 Field Strength of Spurious Radiation Measurement 17
3.6 Frequency Stability Measurement 19

4 LIST OF MEASURING EQUIPMENT **21**

5 UNCERTAINTY OF EVALUATION **22**

APPENDIX A. TEST RESULTS OF CONDUCTED TEST

APPENDIX B. TEST RESULTS OF RADIATED TEST

APPENDIX C. SETUP PHOTOGRAPHS

REVISION HISTORY

REPORT NO.	VERSION	DESCRIPTION	ISSUED DATE
FW010402A	Rev. 01	Initial issue of report	Mar. 13, 2020

SUMMARY OF TEST RESULT

Report Section	FCC Rule	Description	Limit	Result	Remark
3.1	§2.1046	Conducted Output Power	Reporting only	PASS	-
3.2	§2.1049 §90.209	Occupied Bandwidth and 26dB Bandwidth	Reporting only	PASS	-
3.3	§2.1051 §90.691	Emission masks – In-band emissions	< $50+10\log_{10}$(P[Watts])	PASS	-
3.4	§2.1051 §90.691	Emission masks – Out of band emissions	< $43+10\log_{10}$(P[Watts])	PASS	-
3.5	§2.1053 §90.691	Field Strength of Spurious Radiation	< $43+10\log_{10}$(P[Watts])	PASS	Under limit 50.31 dB at 2462.000 MHz
3.6	§2.1055 §90.213	Frequency Stability for Temperature & Voltage	< 2.5 ppm	PASS	-

Declaration of Conformity:
The test results with all measurement uncertainty excluded are presented in accordance with the regulation limits or requirements declared by manufacturers.
Comments and Explanations:
The declared of product specification for EUT presented in the report are provided by the manufacturer, and the manufacturer takes all the responsibilities for the accuracy of product specification.

1 General Description

1.1 Applicant

Motorola Mobility LLC
222 W,Merchandise Mart Plaza, Chicago IL 60654 USA

1.2 Manufacturer

Motorola Mobility LLC
222 W,Merchandise Mart Plaza, Chicago IL 60654 USA

1.3 Feature of Equipment Under Test

Product Feature & Specification	
Equipment	Mobile Cellular Phone
Brand Name	Motorola
Model Name	XT2045-3
FCC ID	IHDT56YK1
EUT supports Radios application	CDMA/GSM/WCDMA/LTE WLAN 2.4GHz 802.11b/g/n HT20 WLAN 5GHz 802.11a/n HT20/HT40 WLAN 5GHz 802.11ac VHT20/VHT40/VHT80 Bluetooth BR/EDR/LE FM Receiver and GNSS
IMEI Code	Conducted: 359109100024617 Radiation: 359109100024195
HW Version	DVT2
SW Version	QPJ30.85
EUT Stage	Identical Prototype

Remark: The above EUT's information was declared by manufacturer. Please refer to the specifications or user's manual for more detailed description.

1.4 Product Specification of Equipment Under Test

Product Specification subjective to this standard	
Tx Frequency	BC10 : 817.9 ~ 823.1 MHz
Rx Frequency	BC10 : 862.9 ~ 868.1 MHz
Maximum Output Power to Antenna	24.33 dBm
Antenna Type	Loop Antenna
Type of Modulation	CDMA2000 1xRTT: QPSK CDMA2000 1xEV-DO: QPSK/8PSK

1.5 Modification of EUT

No modifications are made to the EUT during all test items.

1.6 Specification of Accessory

Specification of Accessory				
AC Adapter 1	**Brand Name**	Motorola (Acbel)	**Model Name**	SC-41
	Power Rating	I/P: 100-240 Vac, 300mA ,50/60HZ O/P: 5Vdc, 2000mA		
AC Adapter 2	**Brand Name**	Motorola (Chenyang)	**Model Name**	SC-41
	Power Rating	I/P: 100-240 Vac, 300mA ,50/60HZ O/P: 5Vdc, 2000mA		
Battery	**Brand Name**	Motorola (ATL)	**Model Name**	KG40
	Power Rating	3.8Vdc, 3760/4000mAh	**Type**	Li-ion, Polymer
USB Cable 1	**Brand Name**	Motorola (LiQi)	**Model Name**	L52B-053000100
	Signal Line Type	1.0 meter, shielded cable, without ferrite core		
USB Cable 2	**Brand Name**	Motorola (SaiBao)	**Model Name**	S52B-053000100
	Signal Line Type	1.0 meter, shielded cable, without ferrite core		

1.7 Maximum Conducted Power, Frequency Tolerance and Emission Designator

FCC Rule	System	Type of Modulation	Frequency Tolerance (ppm)	Emission Designator	Maximum Conducted power(W)
Part 90S	CDMA2000 BC10 1xRTT	QPSK	0.0158 ppm	1M27F9W	0.2710

1.8 Testing Site

Sporton International (Kunshan) Inc. is accredited to ISO/IEC 17025:2017 by American Association for Laboratory Accreditation with Certificate Number 5145.02.

Test Firm	Sporton International (Kunshan) Inc.		
Test Site Location	No. 1098, Pengxi North Road, Kunshan Economic Development Zone Jiangsu Province 215300 People's Republic of China TEL : +86-512-57900158 FAX : +86-512-57900958		
Test Site No.	**Sporton Site No.**	**FCC Designation No.**	**FCC Test Firm Registration No.**
	03CH06-KS TH01-KS	CN1257	314309

1.9 Test Software

Item	Site	Manufacture	Name	Version
1.	03CH06-KS	AUDIX	E3	6.2009-8-24al

1.10 Applied Standards

According to the specifications of the manufacturer, the EUT must comply with the requirements of the following standards:

- 47 CFR Part 2, 90(S)
- ANSI C63.26-2015
- FCC KDB 971168 D01 Power Meas. License Digital Systems v03r01

Remark:

1. All test items were verified and recorded according to the standards and without any deviation during the test.
2. This EUT has also been tested and complied with the requirements of FCC Part 15, Subpart B, recorded in a separate test report.

2 Test Configuration of Equipment Under Test

2.1 Test Mode

During all testing, EUT is in link mode with base station emulator at maximum power level. The spurious emission measurements were carried out in semi-anechoic chamber with 3-meter test range, and EUT is rotated on three test planes to find out the worst emission.

Frequency range investigated for radiated emission is 30 MHz to 10th harmonic.

Test Modes		
Band	**Radiated TCs**	**Conducted TCs**
CDMA2000 BC10	■ 1xRTT Link	■ 1xRTT Link

Note: The maximum RF output power levels are 1xRTT RC3 SO55 mode for CDMA2000 BC10 on QPSK Link; only these modes were used for all tests.

2.2 Connection Diagram of Test System

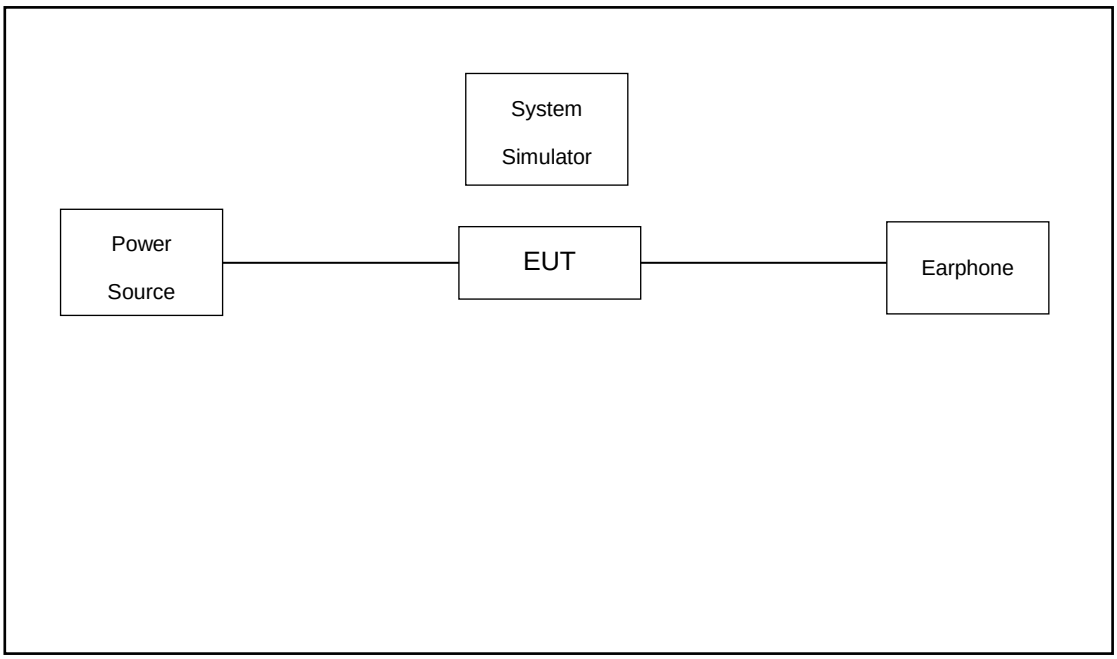

2.3 Support Unit used in test configuration and system

Item	Equipment	Trade Name	Model No.	FCC ID	Data Cable	Power Cord
1.	System Simulator	Anritsu	MT8820C	N/A	N/A	Unshielded, 1.5m
2.	DC Power Supply	GWINSTEK	GPS-3030D	N/A	N/A	Unshielded, 1.8m
3.	Earphone	Moto	SH38C16618	N/A	Unshielded,1.2m	N/A

2.4 Measurement Results Explanation Example

For all conducted test items:

The offset level is set in the spectrum analyzer to compensate the RF cable loss and attenuator factor between EUT conducted output port and spectrum analyzer. With the offset compensation, the spectrum analyzer reading level is exactly the EUT RF output level.

Example:

The spectrum analyzer offset is derived from RF cable loss and attenuator factor.

Offset = RF cable loss + attenuator factor.

Following shows an offset computation example with cable loss 4.2 dB and 10dB attenuator.

Offset (dB) = RF cable loss (dB) + attenuator factor (dB).

= 4.2 + 10 = 14.2 (dB)

2.5 Frequency List of Low/Middle/High Channels

Frequency List				
Band	**Channel/Frequency(MHz)**	**Lowest**	**Middle**	**Highest**
CDMA200 BC10	Channel	476	580	684
	Frequency	817.9	820.5	823.1

3 Test Result

3.1 Conducted Output Power Measurement

3.1.1 Description of the Conducted Output Power Measurement

A system simulator was used to establish communication with the EUT. Its parameters were set to enforce EUT transmitting at the maximum power. The measured power in the radio frequency on the transmitter output terminals shall be reported.

3.1.2 Measuring Instruments

The measuring equipment is listed in the section 4 of this test report.

3.1.3 Test Procedures

1. The transmitter output port was connected to the system simulator.
2. Set EUT at maximum power through system simulator.
3. Select lowest, middle, and highest channels for each band and different modulation.
4. Measure and record the power level from the system simulator.

3.1.4 Test Setup

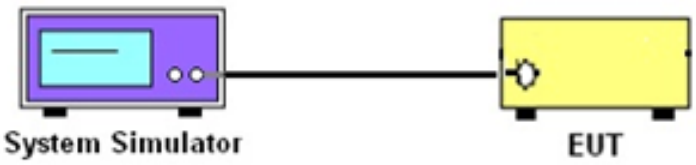

3.1.5 Test Result of Conducted Output Power

Please refer to Appendix A.

3.2 99% Occupied Bandwidth and 26dB Bandwidth Measurement

3.2.1 Description of (Occupied) Bandwidth Limitations Measurement

The 99% occupied bandwidth is the width of a frequency band such that, below the lower and above the upper frequency limits, the mean powers emitted are each equal to a specified percentage 0.5% of the total mean transmitted power.

The emission bandwidth is defined as the width of the signal between two points, located at the 2 sides of the carrier frequency, outside of which all emissions are attenuated at least 26 dB below the transmitter power.

3.2.2 Measuring Instruments

The measuring equipment is listed in the section 4 of this test report.

3.2.3 Test Procedures

1. The EUT was connected to spectrum analyzer and system simulator via a power divider.
2. The 26dB and 99% occupied bandwidth (BW) of the middle channel for the highest RF power with full RB sizes were measured.

3.2.4 Test Setup

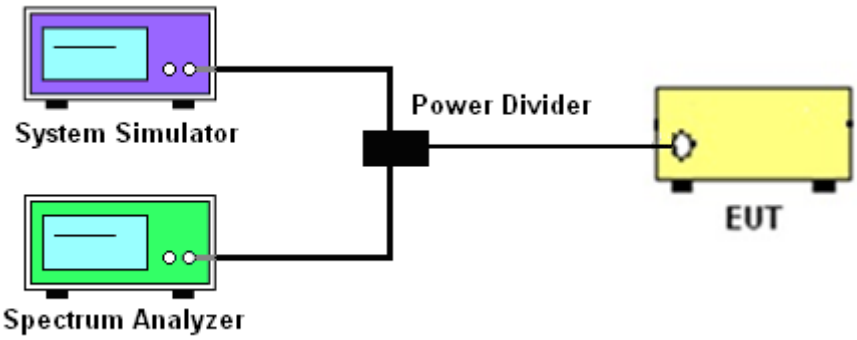

3.2.5 Test Result of 99% Occupied Bandwidth and 26dB Bandwidth

Please refer to Appendix A.

3.3 Emissions Mask Measurement

3.3.1 Description of Emissions Mask Measurement

Equipment used in this licensed to EA or non-EA systems shall comply with the emission mask provisions of FCC Part 90.691.(a):

(a) Out-of-band emission requirement shall apply only to the “outer” channels included in an EA license and to spectrum adjacent to interior channels used by incumbent licensees. The emission limits are as follows:

(1) For any frequency removed from the EA licensee's frequency block by up to and including 37.5 kHz, the power of any emission shall be attenuated below the transmitter power (P) in watts by at least 116 $Log_{10}(f/6.1)$ decibels or 50 + 10 $Log_{10}(P)$ decibels or 80 decibels, whichever is the lesser attenuation, where f is the frequency removed from the center of the outer channel in the block in kilohertz and where f is greater than 12.5 kHz.

(2) For any frequency removed from the EA licensee's frequency block greater than 37.5 kHz, the power of any emission shall be attenuated below the transmitter power (P) in watts by at least 43 + $10Log_{10}(P)$ decibels or 80 decibels, whichever is the lesser attenuation, where f is the frequency removed from the center of the outer channel in the block in kilohertz and where f is greater than 37.5 kHz.

3.3.2 Measuring Instruments

The measuring equipment is listed in the section 4 of this test report.

3.3.3 Test Procedures

1. The EUT was connected to spectrum analyzer and base station via power divider.
2. The emissions mask of low and high channels for the highest RF powers were measured.
3. The measured RBW and the VBW set 3 times of RBW are then set in spectrum analyzer, and the RBW correction factor 10log (1% of OBW/measured RBW)(dB) was compensated, if required.
4. The test results were shown below plots with a correction offset factor including cable loss, insertion loss of power divider.

3.3.4 Test Setup

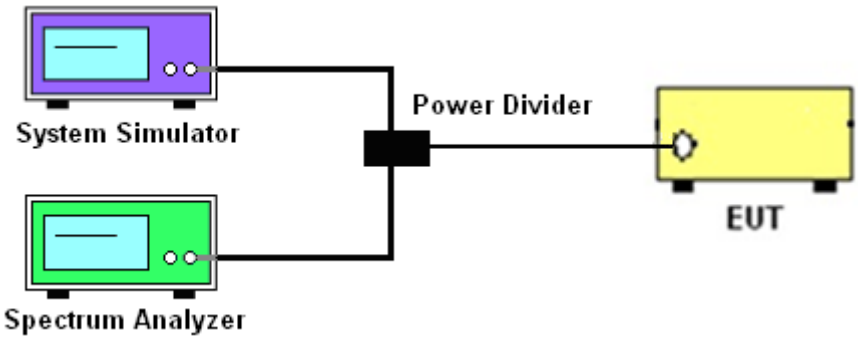

3.3.5 Test Result (Plots) of Conducted Emissions Mask

Please refer to Appendix A.

3.4 Emissions Mask – Out Of Band Emissions Measurement

3.4.1 Description of Conducted Emissions Out of band emissions measurement

The power of any emission FCC Part 90.691 (a)(2) on any frequency removed from the assigned frequency by out of the authorized bandwidth at least 43 + 10 log (P) dB. It is measured by means of a calibrated spectrum analyzer and scanned from 30 MHz up to a frequency including its 10th harmonic.

3.4.2 Measuring Instruments

The measuring equipment is listed in the section 4 of this test report.

3.4.3 Test Procedures

1. The EUT was connected to spectrum analyzer and system simulator via a power divider.
2. The RF output of EUT was connected to the spectrum analyzer by RF cable and attenuator. The path loss was compensated to the results for each measurement.
3. The middle channel for the highest RF power within the transmitting frequency was measured.
4. The conducted spurious emission for the whole frequency range was taken.
5. Make the measurement with the spectrum analyzer's RBW = 1MHz, VBW = 3MHz, taking the record of maximum spurious emission.
6. The RF fundamental frequency should be excluded against the limit line in the operating frequency band.
7. The limit line is derived from 43 + 10log(P)dB below the transmitter power P(Watts)
   = P(W)- [43 + 10log(P)] (dB)
   = [30 + 10log(P)] (dBm) - [43 + 10log(P)] (dB)
   = -13dBm.

3.4.4 Test Setup

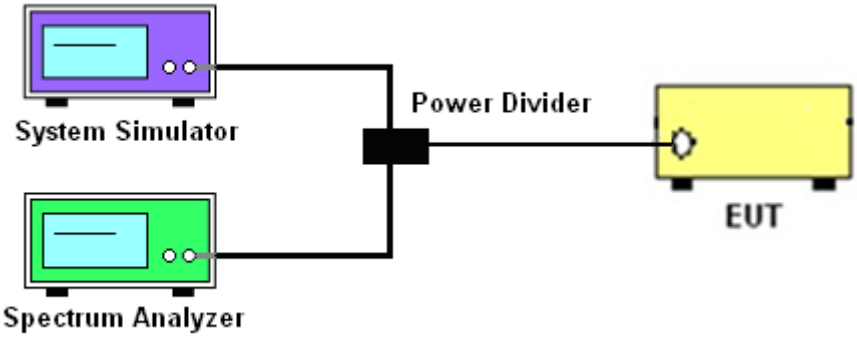

3.4.5 Test Result (Plots) of Conducted Emission

Please refer to Appendix A.

3.5 Field Strength of Spurious Radiation Measurement

3.5.1 Description of Field Strength of Spurious Radiated Measurement

The radiated spurious emission was measured by substitution method according to ANSI C632.6. The power of any emission FCC Part 90.691 on any frequency removed from the assigned frequency by more than 250 percent of the authorized bandwidth at least 43 + 10 log (P) dB. The spectrum is scanned from 30 MHz up to a frequency including its 10th harmonic.

3.5.2 Measuring Instruments

The measuring equipment is listed in the section 4 of this test report.

3.5.3 Test Procedures

1. The EUT was placed on a turntable with 0.8 meter for frequency below 1GHz and 1.5 meter for frequency above 1GHz respectively above ground.
2. The EUT was set 3 meters from the receiving antenna, which was mounted on the antenna tower.
3. The table was rotated 360 degrees to determine the position of the highest spurious emission.
4. The height of the receiving antenna is varied between one meter and four meters to search the maximum spurious emission for both horizontal and vertical polarizations.
5. Make the measurement with the spectrum analyzer's RBW = 1MHz, VBW = 3MHz, Sweep = 500ms, Taking the record of maximum spurious emission.
6. A horn antenna was substituted in place of the EUT and was driven by a signal generator.
7. Tune the output power of signal generator to the same emission level with EUT maximum spurious emission.
8. Taking the record of output power at antenna port.
9. Repeat step 7 to step 8 for another polarization.
10. EIRP (dBm) = S.G. Power – Tx Cable Loss + Tx Antenna Gain
11. ERP (dBm) = EIRP - 2.15
12. The RF fundamental frequency should be excluded against the limit line in the operating frequency band.
13. The limit line is derived from 43 + 10log(P) dB below the transmitter power P(Watts)

3.5.4 Test Setup

For radiated test from 30MHz to 1GHz

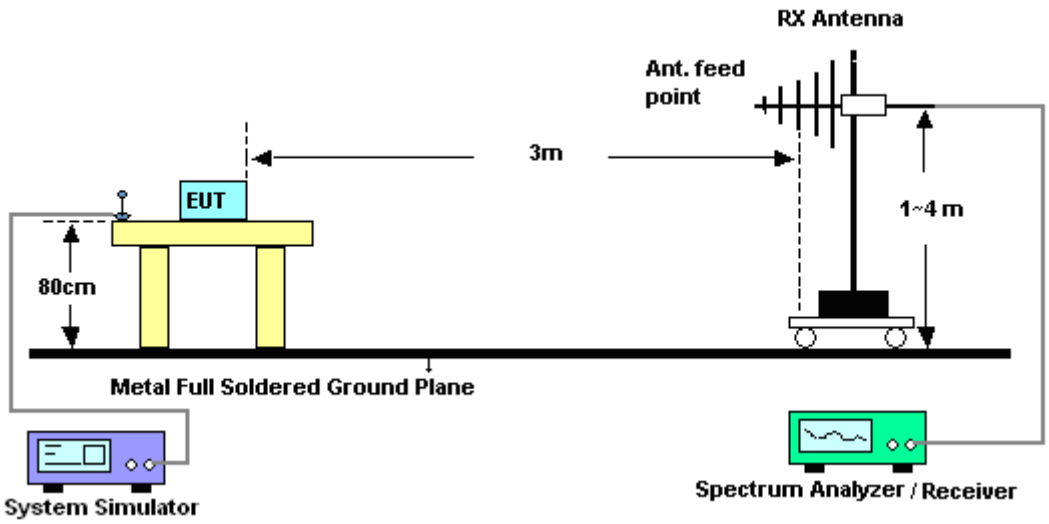

For radiated test above 1GHz

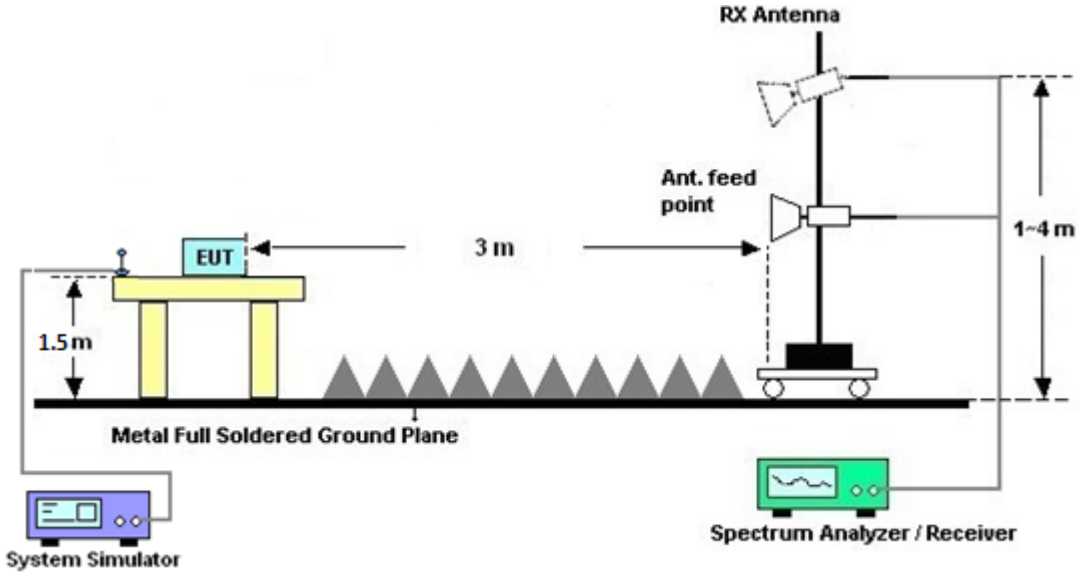

3.5.5 Test Result of Field Strength of Spurious Radiated

Please refer to Appendix B.

3.6 Frequency Stability Measurement

3.6.1 Description of Frequency Stability Measurement

The frequency stability shall be measured by variation of ambient temperature and variation of primary supply voltage to ensure that the fundamental emission stays within the authorized frequency block. The frequency stability of the transmitter shall be maintained within ±0.00025% (±2.5ppm) of the center frequency according to FCC Part 90.213.

3.6.2 Measuring Instruments

The measuring equipment is listed in the section 4 of this test report.

3.6.3 Test Procedures for Temperature Variation

1. The EUT was set up in the thermal chamber and connected with the base station.
2. With power OFF, the temperature was decreased to -30°C and the EUT was stabilized for three hours. Power was applied and the maximum change in frequency was recorded within one minute.
3. With power OFF, the temperature was raised in 10°C step up to 50°C. The EUT was stabilized at each step for at least half an hour. Power was applied and the maximum frequency change was recorded within one minute.

3.6.4 Test Procedures for Voltage Variation

1. The EUT was placed in a temperature chamber at 20±5°C and connected with the system simulator.
2. The power supply voltage to the EUT was varied from 85% to 115% of the nominal value for other than hand carried battery equipment.
3. For hand carried, battery powered equipment, reduce the primary ac or dc supply voltage to the
4. battery operating end point, which shall be specified by the manufacturer.
5. The variation in frequency was measured for the worst case.

3.6.5 Test Setup

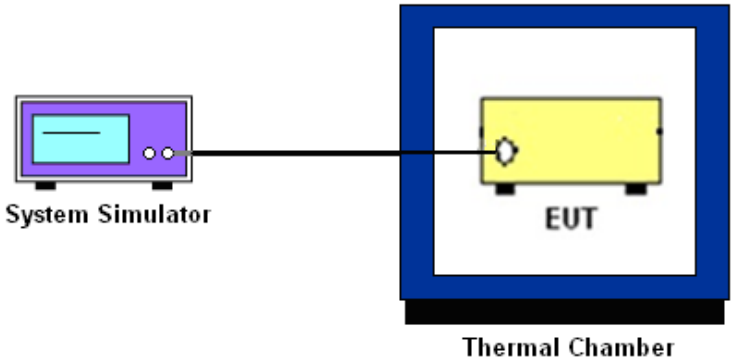

3.6.6 Test Result of Temperature Variation

Please refer to Appendix A.

4 List of Measuring Equipment

Instrument	Manufacturer	Model No.	Serial No.	Characteristics	Calibration Date	Test Date	Due Date	Remark
Spectrum Analyzer	R&S	FSV40	101040	10Hz~40GHz	Nov. 02, 2019	Jan. 18, 2020~ Mar. 13, 2020	Nov. 01, 2020	Conducted (TH01-KS)
Thermal Chamber	Ten Billion	TTC-B3S	TBN-960502	-40~+150°C	Nov. 19, 2019	Jan. 18, 2020~ Mar. 13, 2020	Nov. 18, 2020	Conducted (TH01-KS)
EXA Spectrum Analyzer	Keysight	N9010A	MY55150208	10Hz-44GHz	Apr. 16, 2019	Mar. 09, 2020	Apr. 15, 2020	Radiation (03CH06-KS)
Bilog Antenna	TeseQ	CBL6111D	49921	30MHz-1GHz	May 30, 2019	Mar. 09, 2020	May 29, 2020	Radiation (03CH06-KS)
Double Ridge Horn Antenna	ETS-Lindgren	3117	75959	1GHz~18GHz	Mar. 27, 2019	Mar. 09, 2020	Mar. 26, 2020	Radiation (03CH06-KS)
SHF-EHF Horn	Com-power	AH-840	101070	18GHz~40GHz	Jan. 08, 2020	Mar. 09, 2020	Jan. 07, 2021	Radiation (03CH06-KS)
Amplifier	SONOMA	310N	187289	9KHz ~1GHZ	Aug. 06, 2019	Mar. 09, 2020	Aug. 05, 2020	Radiation (03CH06-KS)
Amplifier	MITEQ	TTA1840-35 -HG	2014749	18~40GHz	Jan. 14, 2020	Mar. 09, 2020	Jan. 13, 2021	Radiation (03CH06-KS)
high gain Amplifier	MITEQ	AMF-7D-00 101800-30-1 0P	2025788	1Ghz-18Ghz	Apr. 17, 2019	Mar. 09, 2020	Apr. 16, 2020	Radiation (03CH06-KS)
Amplifier	Keysight	83017A	MY53270203	500MHz~26.5GHz	Apr. 15, 2019	Mar. 09, 2020	Apr. 14. 2020	Radiation (03CH06-KS)
AC Power Source	Chroma	61601	F104090004	N/A	NCR	Mar. 09, 2020	NCR	Radiation (03CH06-KS)
Turn Table	ChamPro	EM 1000-T	060762-T	0~360 degree	NCR	Mar. 09, 2020	NCR	Radiation (03CH06-KS)
Antenna Mast	ChamPro	EM 1000-A	060762-A	1 m~4 m	NCR	Mar. 09, 2020	NCR	Radiation (03CH06-KS)

NCR: No Calibration Required

5 Uncertainty of Evaluation

The measurement uncertainties shown below were calculated in accordance with the requirements of ANSI 63.26-2015. All the measurement uncertainty value were shown with a coverage K=2 to indicate 95% level of confidence. The measurement data show herein meets or exceeds the CISPR measurement uncertainty values specified in CISPR 16-4-2 and can be compared directly to specified limit to determine compliance.

Uncertainty of Radiated Emission Measurement (30 MHz ~ 1000 MHz)

Measuring Uncertainty for a Level of Confidence of 95% (U = 2Uc(y))	**2.5dB**

Uncertainty of Radiated Emission Measurement (1GHz ~ 18GHz)

Measuring Uncertainty for a Level of Confidence of 95% (U = 2Uc(y))	**2.1dB**

Appendix A. Test Results of Conducted Test

Conducted Output Power (Average power)

Conducted Power (*Unit: dBm)			
Band	**CDMA2000 BC10**		
Channel	**476**	**580**	**684**
Frequency	**817.9**	**820.5**	**823.1**
RC1 SO55	24.14	24.27	24.32
RC3 SO55	24.11	24.29	**24.33**
RC3 SO32 (F+SCH)	24.15	24.30	24.31
RC3 SO32 (+SCH)	24.13	24.31	24.28
RTAP 153.6Kbps	23.93	24.07	24.11
RETAP 4096Bits	23.95	24.12	24.08

26dB Bandwidth

Mode	CDMA BC10(MHz)
Mod.	1xRTT
Lowest CH	1.4266
Middle CH	1.4246
Highest CH	1.4266

CDMA BC10 (1xRTT)

Lowest Channel

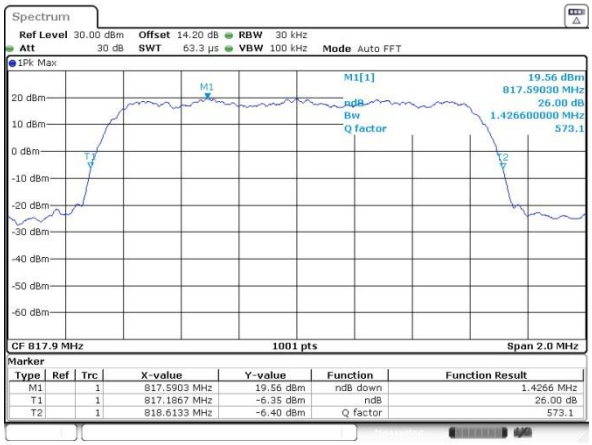

Middle Channel

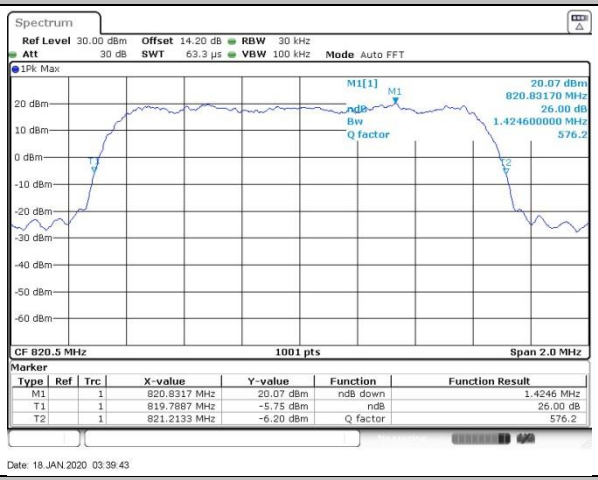

Highest Channel

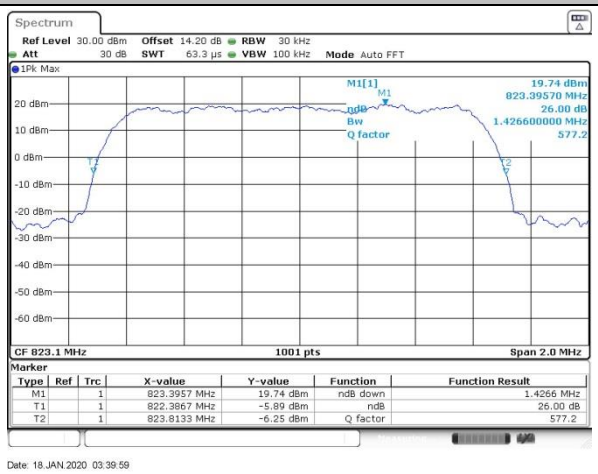

Occupied Bandwidth

Mode	CDMA BC10(MHz)
Mod.	1xRTT
Lowest CH	1.27
Middle CH	1.27
Highest CH	1.27

CDMA BC10 (1xRTT)

Lowest Channel

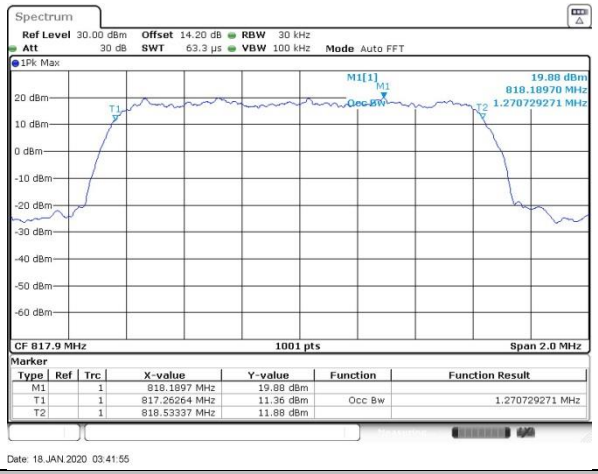

Middle Channel

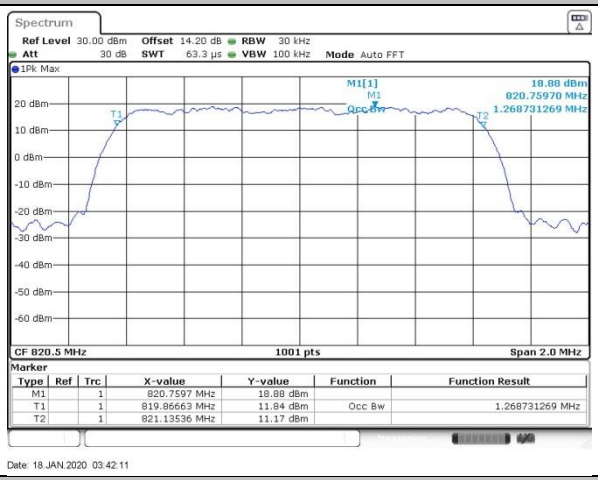

Highest Channel

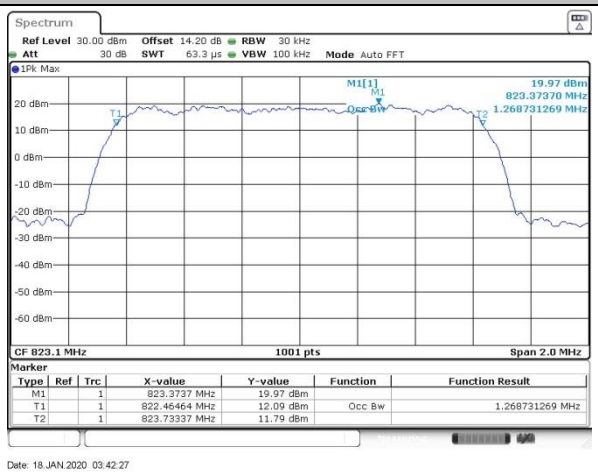

Conducted Band Edge

CDMA BC10 (1xRTT)

Lowest Band Edge

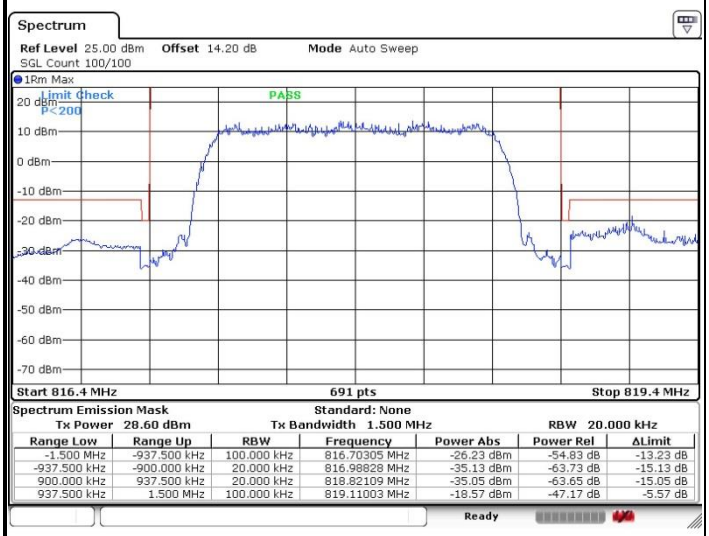

Spectrum Emission Mask Standard: None
Tx Power 28.60 dBm Tx Bandwidth 1.500 MHz RBW 20.000 kHz

Range Low	Range Up	RBW	Frequency	Power Abs	Power Rel	ΔLimit
-1.500 MHz	-937.500 kHz	100.000 kHz	816.70305 MHz	-26.23 dBm	-54.83 dB	-13.23 dB
-937.500 kHz	-900.000 kHz	20.000 kHz	816.98828 MHz	-35.13 dBm	-63.73 dB	-15.13 dB
900.000 kHz	937.500 kHz	20.000 kHz	818.82109 MHz	-35.05 dBm	-63.65 dB	-15.05 dB
937.500 kHz	1.500 MHz	100.000 kHz	819.11003 MHz	-18.57 dBm	-47.17 dB	-5.57 dB

Date: 13.MAR.2020 15:39:09

Highest Band Edge

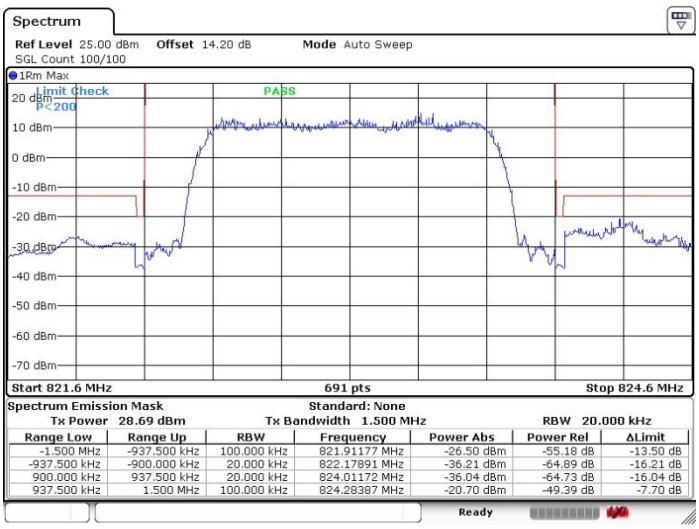

Spectrum Emission Mask Standard: None
Tx Power 28.69 dBm Tx Bandwidth 1.500 MHz RBW 20.000 kHz

Range Low	Range Up	RBW	Frequency	Power Abs	Power Rel	ΔLimit
-1.500 MHz	-937.500 kHz	100.000 kHz	821.91177 MHz	-26.50 dBm	-55.18 dB	-13.50 dB
-937.500 kHz	-900.000 kHz	20.000 kHz	822.17891 MHz	-36.21 dBm	-64.89 dB	-16.21 dB
900.000 kHz	937.500 kHz	20.000 kHz	824.01172 MHz	-36.04 dBm	-64.73 dB	-16.04 dB
937.500 kHz	1.500 MHz	100.000 kHz	824.28387 MHz	-20.70 dBm	-49.39 dB	-7.70 dB

Date: 13.MAR.2020 15:40:43

Conducted Spurious Emission

CDMA BC10 (1xRTT)

Lowest Channel

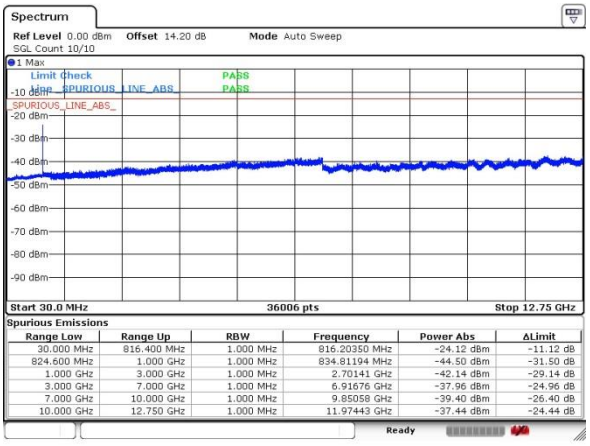

Spurious Emissions

Range Low	Range Up	RBW	Frequency	Power Abs	ΔLimit
30.000 MHz	816.400 MHz	1.000 MHz	816.20350 MHz	-24.12 dBm	-11.12 dB
824.600 MHz	1.000 GHz	1.000 MHz	834.81194 MHz	-44.50 dBm	-31.50 dB
1.000 GHz	3.000 GHz	1.000 MHz	2.70141 GHz	-42.14 dBm	-29.14 dB
3.000 GHz	7.000 GHz	1.000 MHz	6.91676 GHz	-37.96 dBm	-24.96 dB
7.000 GHz	10.000 GHz	1.000 MHz	9.85058 GHz	-39.40 dBm	-26.40 dB
10.000 GHz	12.750 GHz	1.000 MHz	11.97443 GHz	-37.44 dBm	-24.44 dB

Date: 13.MAR.2020 15:46:29

Middle Channel

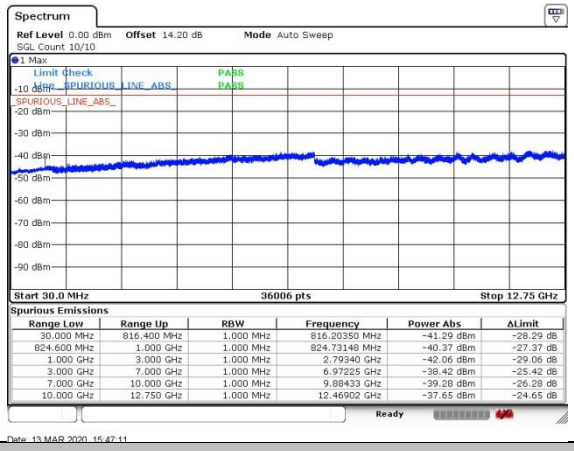

Spurious Emissions

Range Low	Range Up	RBW	Frequency	Power Abs	ΔLimit
30.000 MHz	816.400 MHz	1.000 MHz	816.20350 MHz	-41.29 dBm	-28.29 dB
824.600 MHz	1.000 GHz	1.000 MHz	824.73148 MHz	-40.37 dBm	-27.37 dB
1.000 GHz	3.000 GHz	1.000 MHz	2.79340 GHz	-42.06 dBm	-29.06 dB
3.000 GHz	7.000 GHz	1.000 MHz	6.97225 GHz	-38.42 dBm	-25.42 dB
7.000 GHz	10.000 GHz	1.000 MHz	9.88433 GHz	-39.28 dBm	-26.28 dB
10.000 GHz	12.750 GHz	1.000 MHz	12.46902 GHz	-37.65 dBm	-24.65 dB

Date: 13.MAR.2020 15:47:11

Highest Channel

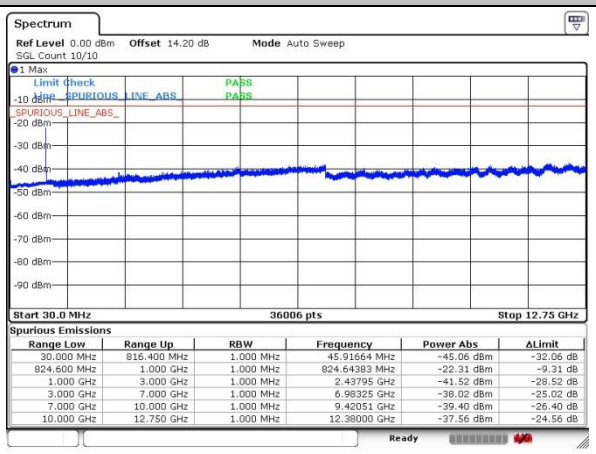

Spurious Emissions

Range Low	Range Up	RBW	Frequency	Power Abs	ΔLimit
30.000 MHz	816.400 MHz	1.000 MHz	45.91664 MHz	-45.06 dBm	-32.06 dB
824.600 MHz	1.000 GHz	1.000 MHz	824.64383 MHz	-22.31 dBm	-9.31 dB
1.000 GHz	3.000 GHz	1.000 MHz	2.43795 GHz	-41.52 dBm	-28.52 dB
3.000 GHz	7.000 GHz	1.000 MHz	6.98325 GHz	-38.02 dBm	-25.02 dB
7.000 GHz	10.000 GHz	1.000 MHz	9.42051 GHz	-39.40 dBm	-26.40 dB
10.000 GHz	12.750 GHz	1.000 MHz	12.38000 GHz	-37.56 dBm	-24.56 dB

Date: 13.MAR.2020 15:47:56

Frequency Stability

Test Conditions	Middle Channel	CDMA BC10 (1xRTT)	Limit 2.5ppm
Temperature (°C)	Voltage (Volt)	Deviation (ppm)	Result
50	Normal Voltage	0.0122	PASS
40	Normal Voltage	0.0158	
30	Normal Voltage	0.0049	
20(Ref.)	Normal Voltage	0.0000	
10	Normal Voltage	0.0012	
0	Normal Voltage	0.0024	
-10	Normal Voltage	0.0037	
-20	Normal Voltage	0.0073	
-30	Normal Voltage	0.0012	
20	Maximum Voltage	0.0134	
20	Normal Voltage	0.0000	
20	Battery End Point	0.0061	

Note: Normal Voltage = 3.8V；Battery End Point (BEP) = 3.4V；Maximum Voltage =4.4V

Appendix B. Test Results of Radiated Test

CDMA BC10 (1xRTT)								
Channel	Frequency (MHz)	ERP (dBm)	Limit (dBm)	Over Limit (dB)	S.G. Power (dBm)	TX Cable loss (dB)	TX Antenna Gain (dBi)	Polarization (H/V)
Middle	1640	-68.19	-13	-55.19	-75.16	1.58	10.70	H
	2462	-63.82	-13	-50.82	-72.07	2.102	12.50	H
	3282	-63.65	-13	-50.65	-72.54	2.856	13.90	H
	1640	-68.26	-13	-55.26	-75.23	1.58	10.70	V
	2462	-63.31	-13	-50.31	-71.56	2.10	12.50	V
	3282	-63.69	-13	-50.69	-72.58	2.86	13.90	V

Remark: Spurious emissions within 30-1000MHz were found more than 20dB below limit line.