# FCC RF Test Report

| | | |
|---|---|---|
| **APPLICANT** | : | **Motorola Mobility LLC** |
| **EQUIPMENT** | : | **Mobile Cellular Phone** |
| **BRAND NAME** | : | **Motorola** |
| **MODEL NAME** | : | **XT2041-4, XT2041-6, XT2041-7, XT2041DL** |
| **FCC ID** | : | **IHDT56YL1** |
| **STANDARD** | : | **47 CFR Part 2, and 90(S)** |
| **CLASSIFICATION** | : | **PCS Licensed Transmitter Held to Ear (PCE)** |

**The product was received on Sep. 19, 2019 and completely tested on Oct. 29, 2019. We, Sporton International (Kunshan) Inc., would like to declare that the tested sample has been evaluated in accordance with the procedures given in ANSI C63.26-2015 and shown compliance with the applicable technical standards.**

**The test results in this report apply exclusively to the tested model / sample. Without written approval of Sporton International (Kunshan) Inc., the test report shall not be reproduced except in full.**

Jason Jia

**Reviewed by: Jason Jia / Supervisor**

James Huang

**Approved by: James Huang / Manager**

ACCREDITED
Cert #5145.02

***Sporton International (Kunshan) Inc.***

***No. 1098, Pengxi North Road, Kunshan Economic Development Zone Jiangsu Province 215300 People's Republic of China***

# TABLE OF CONTENTS

**REVISION HISTORY** ..... **3**

**SUMMARY OF TEST RESULT** ..... **4**

**1 GENERAL DESCRIPTION** ..... **5**

1.1 Applicant ..... 5
1.2 Manufacturer ..... 5
1.3 Feature of Equipment Under Test ..... 5
1.4 Product Specification of Equipment Under Test ..... 5
1.5 Specification of Accessory ..... 6
1.6 Modification of EUT ..... 6
1.7 Maximum Conducted Power, Frequency Tolerance and Emission Designator ..... 6
1.8 Testing Site ..... 7
1.9 Applied Standards ..... 7

**2 TEST CONFIGURATION OF EQUIPMENT UNDER TEST** ..... **8**

2.1 Test Mode ..... 8
2.2 Connection Diagram of Test System ..... 8
2.3 Support Unit used in test configuration and system ..... 9
2.4 Measurement Results Explanation Example ..... 9
2.5 Frequency List of Low/Middle/High Channels ..... 9

**3 TEST RESULT** ..... **10**

3.1 Conducted Output Power Measurement ..... 10
3.2 99% Occupied Bandwidth and 26dB Bandwidth Measurement ..... 11
3.3 Emissions Mask Measurement ..... 12
3.4 Emissions Mask – Out Of Band Emissions Measurement ..... 14
3.5 Field Strength of Spurious Radiation Measurement ..... 16
3.6 Frequency Stability Measurement ..... 18

**4 LIST OF MEASURING EQUIPMENT** ..... **20**

**5 UNCERTAINTY OF EVALUATION** ..... **21**

**APPENDIX A. TEST RESULTS OF CONDUCTED TEST**

**APPENDIX B. TEST RESULTS OF RADIATED TEST**

**APPENDIX C. SETUP PHOTOGRAPHS**

# REVISION HISTORY

| REPORT NO. | VERSION | DESCRIPTION | ISSUED DATE |
|---|---|---|---|
| FW992001A | Rev. 01 | Initial issue of report | Dec. 10, 2019 |
| | | | |
| | | | |
| | | | |
| | | | |
| | | | |
| | | | |
| | | | |
| | | | |
| | | | |
| | | | |
| | | | |
| | | | |
| | | | |
| | | | |

# SUMMARY OF TEST RESULT

| Report Section | FCC Rule | Description | Limit | Result | Remark |
|---|---|---|---|---|---|
| 3.1 | §2.1046 | Conducted Output Power | Reporting only | PASS | - |
| 3.2 | §2.1049<br>§90.209 | Occupied Bandwidth and 26dB Bandwidth | Reporting only | PASS | - |
| 3.3 | §2.1051<br>§90.691 | Emission masks – In-band emissions | < $50+10\log_{10}$(P[Watts]) | PASS | - |
| 3.4 | §2.1051<br>§90.691 | Emission masks – Out of band emissions | < $43+10\log_{10}$(P[Watts]) | PASS | - |
| 3.5 | §2.1053<br>§90.691 | Field Strength of Spurious Radiation | < $43+10\log_{10}$(P[Watts]) | PASS | Under limit 44.40 dB at 2460.000 MHz |
| 3.6 | §2.1055<br>§90.213 | Frequency Stability for Temperature & Voltage | < 2.5 ppm | PASS | - |

| **Declaration of Conformity:** |
|---|
| The test results with all measurement uncertainty excluded are presented in accordance with the regulation limits or requirements declared by manufacturers. |
| **Comments and Explanations:** |
| The declared of product specification for EUT presented in the report are provided by the manufacturer, and the manufacturer takes all the responsibilities for the accuracy of product specification. |

# 1 General Description

## 1.1 Applicant

**Motorola Mobility LLC**
222 W, Merchandise Mart Plaza, Chicago IL 60654 USA

## 1.2 Manufacturer

**Motorola Mobility LLC**
222 W, Merchandise Mart Plaza, Chicago IL 60654 USA

## 1.3 Feature of Equipment Under Test

| Product Feature & Specification | |
|---|---|
| **Equipment** | Mobile Cellular Phone |
| **Brand Name** | Motorola |
| **Model Name** | XT2041-4, XT2041-6, XT2041-7, XT2041DL |
| **FCC ID** | IHDT56YL1 |
| **EUT supports Radios application** | CDMA/GSM/WCDMA/LTE<br>WLAN 2.4GHz 802.11b/g/n HT20<br>WLAN 5GHz 802.11a/n HT20/HT40<br>WLAN 5GHz 802.11ac VHT20/VHT40/VHT80<br>Bluetooth BR/EDR/LE<br>FM Receiver and GNSS |
| **IMEI Code** | Conducted: 357244100011546/357244100011501<br>Radiation: 357244100020935/357244100020901 |
| **HW Version** | DVT2 |
| **SW Version** | QPM30.55 |
| **EUT Stage** | Identical Prototype |

**Remark:**

1. The above EUT's information was declared by manufacturer. Please refer to the specifications or user's manual for more detailed description.
2. The different model names are for different market requirement.

## 1.4 Product Specification of Equipment Under Test

| Product Specification subjective to this standard | |
|---|---|
| **Tx Frequency** | BC10 : 817.9 ~ 823.1 MHz |
| **Rx Frequency** | BC10 : 862.9 ~ 868.1 MHz |
| **Maximum Output Power to Antenna** | 24.22 dBm |
| **Antenna Type** | PIFA Antenna |
| **Type of Modulation** | CDMA2000 1xRTT: QPSK<br>CDMA2000 1xEV-DO: QPSK/8PSK |

## 1.5 Specification of Accessory

| Specification of Accessory | | | | |
|---|---|---|---|---|
| **AC Adapter 1** | **Brand Name** | Motorola(Acbel) | **Model Name** | SC-41 |
| | **Power Rating** | I/P: 100-240 Vac, 300mA, O/P: 5Vdc, 2000mA | | |
| **AC Adapter 2** | **Brand Name** | Motorola(Chenyang) | **Model Name** | SC-41 |
| | **Power Rating** | I/P: 100-240 Vac, 300mA, O/P: 5Vdc, 2000mA | | |
| **Battery** | **Brand Name** | Motorola ( Amperex ) | **Model Name** | KZ50 |
| | **Power Rating** | 3.8Vdc, 4700mAh | **Type** | Li-ion polymer |
| **USB Cable 1** | **Brand Name** | Motorola (Saibao) | **Model Name** | SC18C24367 |
| | **Signal Line Type** | 1.0 meter, shielded cable, without ferrite core | | |
| **USB Cable 2** | **Brand Name** | Motorola (Luxshare) | **Model Name** | SC18C24368 |
| | **Signal Line Type** | 1.0 meter, shielded cable, without ferrite core | | |

## 1.6 Modification of EUT

No modifications are made to the EUT during all test items.

## 1.7 Maximum Conducted Power, Frequency Tolerance and Emission Designator

| FCC Rule | System | Type of Modulation | Frequency Tolerance (ppm) | Emission Designator | Maximum Conducted power(W) |
|---|---|---|---|---|---|
| Part 90S | CDMA2000 BC10 1xRTT | QPSK | 0.0280 ppm | 1M27F9W | 0.2642 |

## 1.8 Testing Site

Sporton International (Kunshan) Inc. is accredited to ISO/IEC 17025:2017 by American Association for Laboratory Accreditation with Certificate Number 5145.02.

| | | | |
|---|---|---|---|
| **Test Firm** | Sporton International (Kunshan) Inc. | | |
| **Test Site Location** | No. 1098, Pengxi North Road, Kunshan Economic Development Zone<br>Jiangsu Province 215300 People's Republic of China<br>TEL : +86-512-57900158<br>FAX : +86-512-57900958 | | |
| **Test Site No.** | **Sporton Site No.** | **FCC Designation No.** | **FCC Test Firm Registration No.** |
| | 03CH06-KS<br>TH01-KS | CN1257 | 314309 |

## 1.9 Applied Standards

According to the specifications of the manufacturer, the EUT must comply with the requirements of the following standards:

- 47 CFR Part 2, 90(S)
- ANSI C63.26-2015
- FCC KDB 971168 D01 Power Meas. License Digital Systems v03r01

**Remark:**

1. All test items were verified and recorded according to the standards and without any deviation during the test.
2. This EUT has also been tested and complied with the requirements of FCC Part 15, Subpart B, recorded in a separate test report.

# 2 Test Configuration of Equipment Under Test

## 2.1 Test Mode

During all testing, EUT is in link mode with base station emulator at maximum power level. The spurious emission measurements were carried out in semi-anechoic chamber with 3-meter test range, and EUT is rotated on three test planes to find out the worst emission.

Frequency range investigated for radiated emission is 30 MHz to 10th harmonic.

| Test Modes | | |
|---|---|---|
| **Band** | **Radiated TCs** | **Conducted TCs** |
| **CDMA2000 BC10** | ■ 1xRTT Link | ■ 1xRTT Link |

**Note:** The maximum RF output power levels are 1xRTT RC1 SO55 mode for CDMA2000 BC10 on QPSK Link; only these modes were used for all tests.

## 2.2 Connection Diagram of Test System

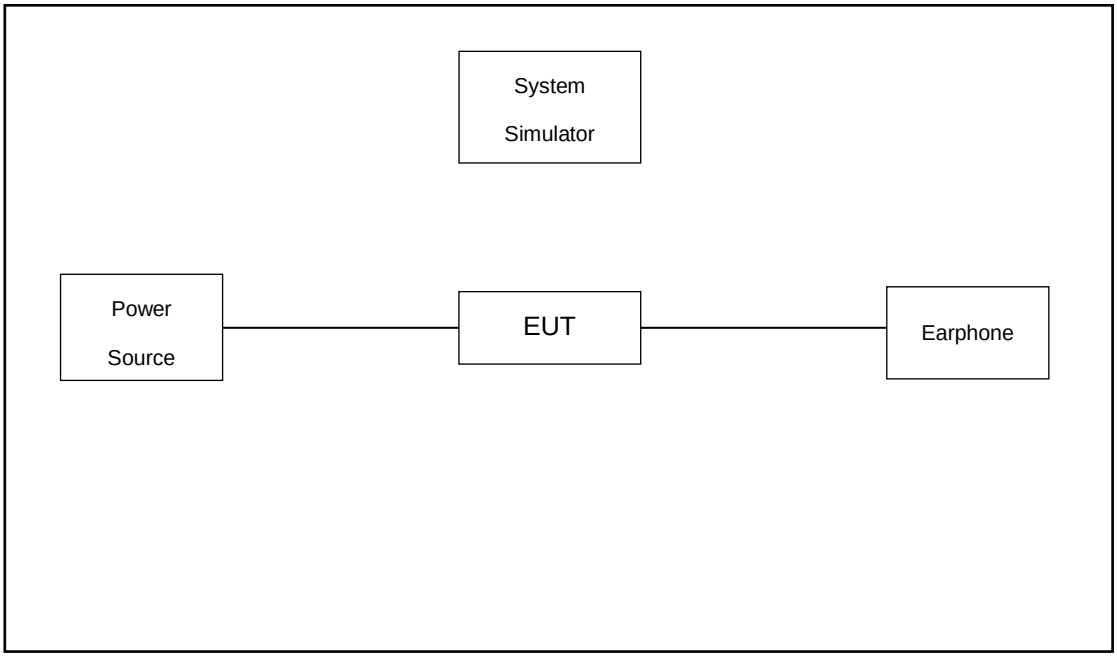

## 2.3 Support Unit used in test configuration and system

| Item | Equipment | Trade Name | Model No. | FCC ID | Data Cable | Power Cord |
|---|---|---|---|---|---|---|
| 1. | System Simulator | R&S | CMU 200 | N/A | N/A | Unshielded, 1.8 m |
| 2. | DC Power Supply | GWINSTEK | GPS-3030D | N/A | N/A | Unshielded, 1.8 m |
| 3. | Earphone | N/A | N/A | N/A | N/A | N/A |

## 2.4 Measurement Results Explanation Example

**For all conducted test items:**

The offset level is set in the spectrum analyzer to compensate the RF cable loss and attenuator factor between EUT conducted output port and spectrum analyzer. With the offset compensation, the spectrum analyzer reading level is exactly the EUT RF output level.

Example:

The spectrum analyzer offset is derived from RF cable loss and attenuator factor.

*Offset = RF cable loss + attenuator factor.*

Following shows an offset computation example with cable loss 7.5 dB and 10dB attenuator.

*Offset (dB) = RF cable loss (dB) + attenuator factor (dB).*

= 7.5 + 10 = 17.5 (dB)

## 2.5 Frequency List of Low/Middle/High Channels

| Frequency List | | | | |
|---|---|---|---|---|
| **Band** | **Channel/Frequency(MHz)** | **Lowest** | **Middle** | **Highest** |
| CDMA200 BC10 | Channel | 476 | 580 | 684 |
| | Frequency | 817.9 | 820.5 | 823.1 |

# 3 Test Result

## 3.1 Conducted Output Power Measurement

### 3.1.1 Description of the Conducted Output Power Measurement

A system simulator was used to establish communication with the EUT. Its parameters were set to enforce EUT transmitting at the maximum power. The measured power in the radio frequency on the transmitter output terminals shall be reported.

### 3.1.2 Measuring Instruments

The measuring equipment is listed in the section 4 of this test report.

### 3.1.3 Test Procedures

1. The transmitter output port was connected to the system simulator.
2. Set EUT at maximum power through system simulator.
3. Select lowest, middle, and highest channels for each band and different modulation.
4. Measure and record the power level from the system simulator.

### 3.1.4 Test Setup

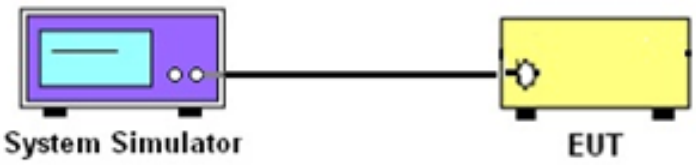


### 3.1.5 Test Result of Conducted Output Power

Please refer to Appendix A.

## 3.2 99% Occupied Bandwidth and 26dB Bandwidth Measurement

### 3.2.1 Description of (Occupied) Bandwidth Limitations Measurement

The 99% occupied bandwidth is the width of a frequency band such that, below the lower and above the upper frequency limits, the mean powers emitted are each equal to a specified percentage 0.5% of the total mean transmitted power.

The emission bandwidth is defined as the width of the signal between two points, located at the 2 sides of the carrier frequency, outside of which all emissions are attenuated at least 26 dB below the transmitter power.

### 3.2.2 Measuring Instruments

The measuring equipment is listed in the section 4 of this test report.

### 3.2.3 Test Procedures

1. The EUT was connected to spectrum analyzer and system simulator via a power divider.
2. The 26dB and 99% occupied bandwidth (BW) of the middle channel for the highest RF power with full RB sizes were measured.

### 3.2.4 Test Setup

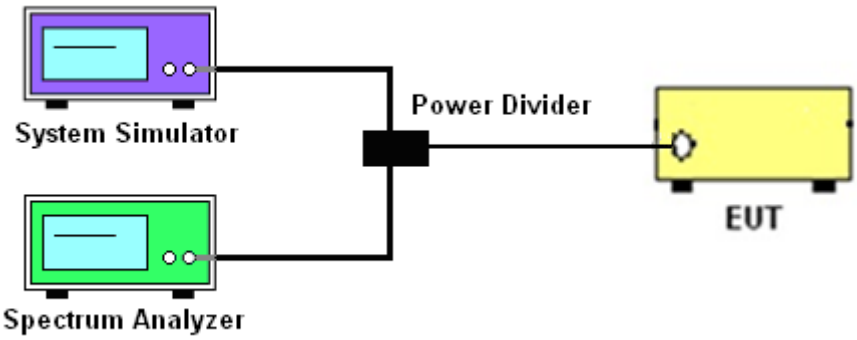


### 3.2.5 Test Result of 99% Occupied Bandwidth and 26dB Bandwidth

Please refer to Appendix A.

## 3.3 Emissions Mask Measurement

### 3.3.1 Description of Emissions Mask Measurement

Equipment used in this licensed to EA or non-EA systems shall comply with the emission mask provisions of FCC Part 90.691.(a):

(a) Out-of-band emission requirement shall apply only to the “outer” channels included in an EA license and to spectrum adjacent to interior channels used by incumbent licensees. The emission limits are as follows:

(1) For any frequency removed from the EA licensee's frequency block by up to and including 37.5 kHz, the power of any emission shall be attenuated below the transmitter power (P) in watts by at least 116 $Log_{10}(f/6.1)$ decibels or 50 + 10 $Log_{10}(P)$ decibels or 80 decibels, whichever is the lesser attenuation, where f is the frequency removed from the center of the outer channel in the block in kilohertz and where f is greater than 12.5 kHz.

(2) For any frequency removed from the EA licensee's frequency block greater than 37.5 kHz, the power of any emission shall be attenuated below the transmitter power (P) in watts by at least 43 + $10Log_{10}(P)$ decibels or 80 decibels, whichever is the lesser attenuation, where f is the frequency removed from the center of the outer channel in the block in kilohertz and where f is greater than 37.5 kHz.

### 3.3.2 Measuring Instruments

The measuring equipment is listed in the section 4 of this test report.

### 3.3.3 Test Procedures

1. The EUT was connected to spectrum analyzer and base station via power divider.
2. The emissions mask of low and high channels for the highest RF powers were measured.
3. The measured RBW and the VBW set 3 times of RBW are then set in spectrum analyzer, and the RBW correction factor 10log (1% of OBW/measured RBW)(dB) was compensated, if required.
4. The test results were shown below plots with a correction offset factor including cable loss, insertion loss of power divider.

### 3.3.4 Test Setup

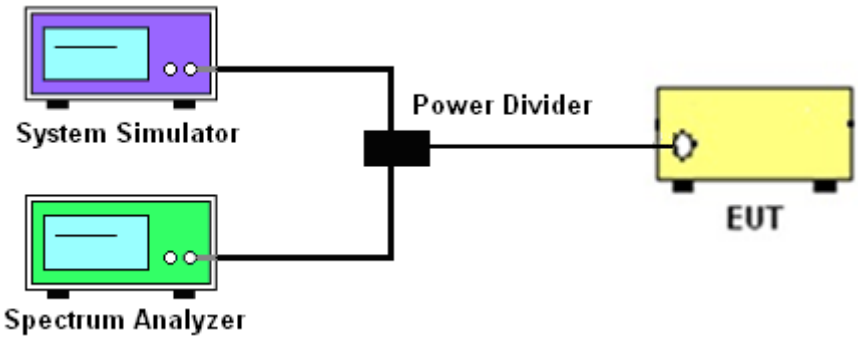


### 3.3.5 Test Result (Plots) of Conducted Emissions Mask

Please refer to Appendix A.

## 3.4 Emissions Mask – Out Of Band Emissions Measurement

### 3.4.1 Description of Conducted Emissions Out of band emissions measurement

The power of any emission FCC Part 90.691 (a)(2) on any frequency removed from the assigned frequency by out of the authorized bandwidth at least 43 + 10 log (P) dB. It is measured by means of a calibrated spectrum analyzer and scanned from 30 MHz up to a frequency including its $10^{th}$ harmonic.

### 3.4.2 Measuring Instruments

The measuring equipment is listed in the section 4 of this test report.

### 3.4.3 Test Procedures

1. The EUT was connected to spectrum analyzer and system simulator via a power divider.
2. The RF output of EUT was connected to the spectrum analyzer by RF cable and attenuator. The path loss was compensated to the results for each measurement.
3. The middle channel for the highest RF power within the transmitting frequency was measured.
4. The conducted spurious emission for the whole frequency range was taken.
5. Make the measurement with the spectrum analyzer's RBW = 1MHz, VBW = 3MHz, taking the record of maximum spurious emission.
6. The RF fundamental frequency should be excluded against the limit line in the operating frequency band.
7. The limit line is derived from 43 + 10log(P)dB below the transmitter power P(Watts)
   = P(W)- [43 + 10log(P)] (dB)
   = [30 + 10log(P)] (dBm) - [43 + 10log(P)] (dB)
   = -13dBm.

### 3.4.4 Test Setup

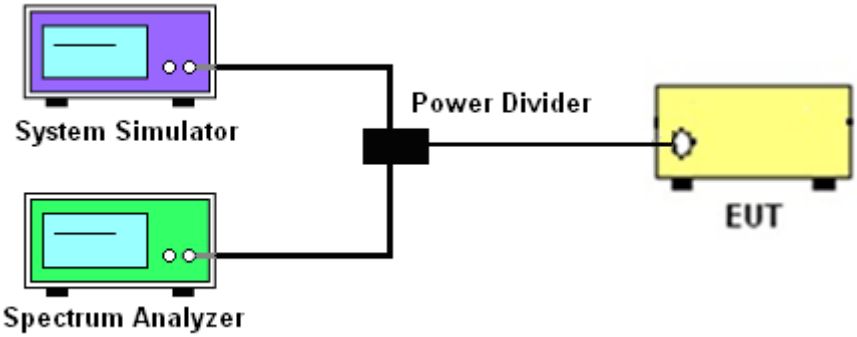


### 3.4.5 Test Result (Plots) of Conducted Emission

Please refer to Appendix A.

## 3.5 Field Strength of Spurious Radiation Measurement

### 3.5.1 Description of Field Strength of Spurious Radiated Measurement

The radiated spurious emission was measured by substitution method according to ANSI C632.6. The power of any emission FCC Part 90.691 on any frequency removed from the assigned frequency by more than 250 percent of the authorized bandwidth at least 43 + 10 log (P) dB. The spectrum is scanned from 30 MHz up to a frequency including its 10th harmonic.

### 3.5.2 Measuring Instruments

The measuring equipment is listed in the section 4 of this test report.

### 3.5.3 Test Procedures

1. The EUT was placed on a turntable with 0.8 meter for frequency below 1GHz and 1.5 meter for frequency above 1GHz respectively above ground.
2. The EUT was set 3 meters from the receiving antenna, which was mounted on the antenna tower.
3. The table was rotated 360 degrees to determine the position of the highest spurious emission.
4. The height of the receiving antenna is varied between one meter and four meters to search the maximum spurious emission for both horizontal and vertical polarizations.
5. Make the measurement with the spectrum analyzer's RBW = 1MHz, VBW = 3MHz, Sweep = 500ms, Taking the record of maximum spurious emission.
6. A horn antenna was substituted in place of the EUT and was driven by a signal generator.
7. Tune the output power of signal generator to the same emission level with EUT maximum spurious emission.
8. Taking the record of output power at antenna port.
9. Repeat step 7 to step 8 for another polarization.
10. EIRP (dBm) = S.G. Power – Tx Cable Loss + Tx Antenna Gain
11. ERP (dBm) = EIRP - 2.15
12. The RF fundamental frequency should be excluded against the limit line in the operating frequency band.
13. The limit line is derived from 43 + 10log(P) dB below the transmitter power P(Watts)

### 3.5.4 Test Setup

**For radiated test from 30MHz to 1GHz**

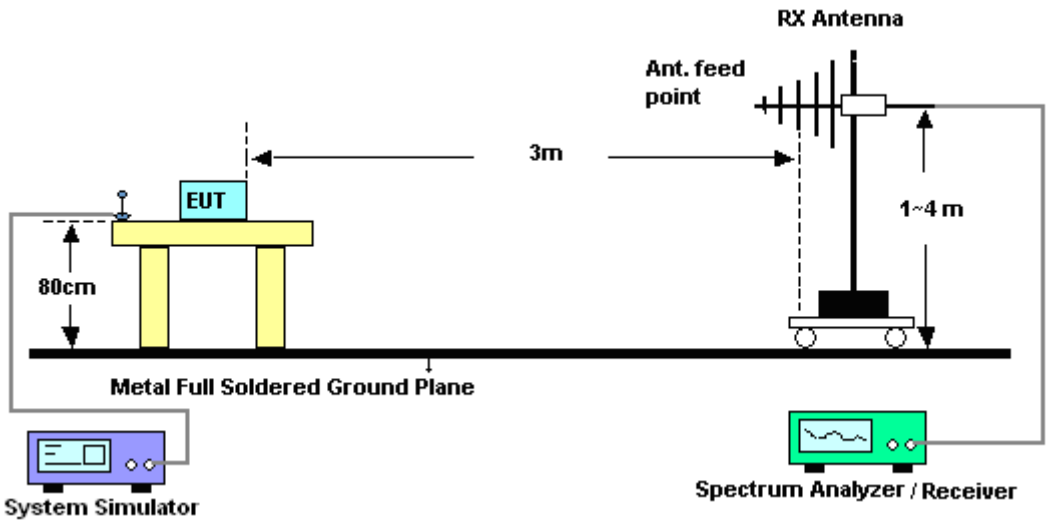


**For radiated test above 1GHz**

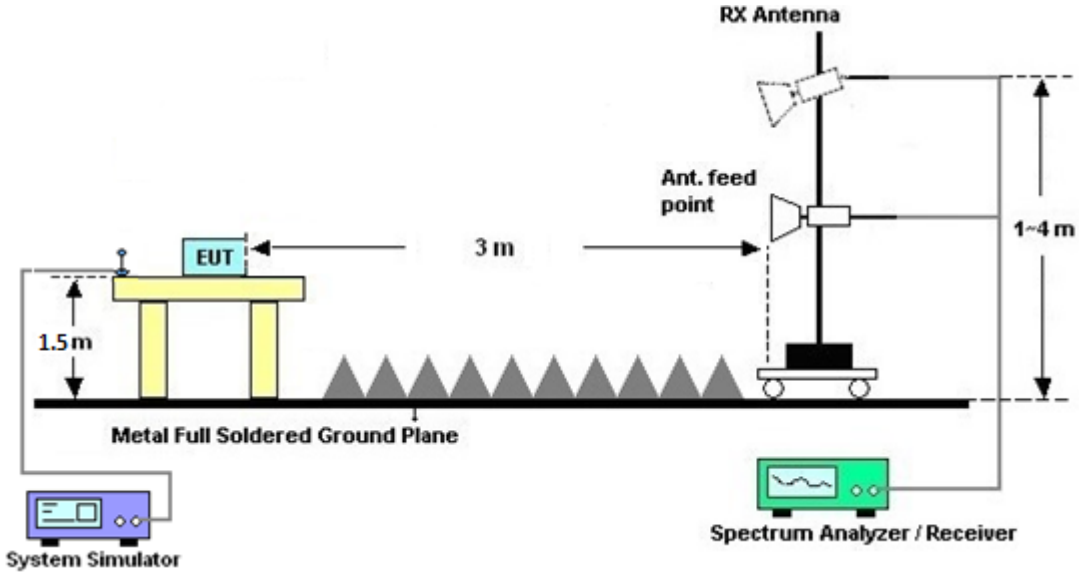


### 3.5.5 Test Result of Field Strength of Spurious Radiated

Please refer to Appendix B.

## 3.6 Frequency Stability Measurement

### 3.6.1 Description of Frequency Stability Measurement

The frequency stability shall be measured by variation of ambient temperature and variation of primary supply voltage to ensure that the fundamental emission stays within the authorized frequency block. The frequency stability of the transmitter shall be maintained within ±0.00025% (±2.5ppm) of the center frequency according to FCC Part 90.213.

### 3.6.2 Measuring Instruments

The measuring equipment is listed in the section 4 of this test report.

### 3.6.3 Test Procedures for Temperature Variation

1. The EUT was set up in the thermal chamber and connected with the base station.
2. With power OFF, the temperature was decreased to -30°C and the EUT was stabilized for three hours. Power was applied and the maximum change in frequency was recorded within one minute.
3. With power OFF, the temperature was raised in 10°C step up to 50°C. The EUT was stabilized at each step for at least half an hour. Power was applied and the maximum frequency change was recorded within one minute.

### 3.6.4 Test Procedures for Voltage Variation

1. The EUT was placed in a temperature chamber at 20±5°C and connected with the system simulator.
2. The power supply voltage to the EUT was varied from 85% to 115% of the nominal value for other than hand carried battery equipment.
3. For hand carried, battery powered equipment, reduce the primary ac or dc supply voltage to the
4. battery operating end point, which shall be specified by the manufacturer.
5. The variation in frequency was measured for the worst case.

### 3.6.5 Test Setup

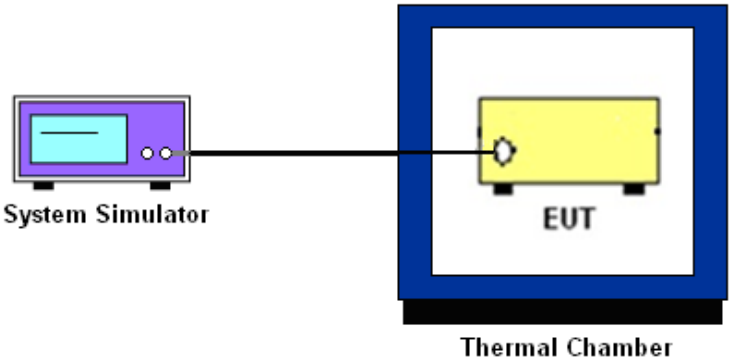


### 3.6.6 Test Result of Temperature Variation

Please refer to Appendix A.

# 4 List of Measuring Equipment

| Instrument | Manufacturer | Model No. | Serial No. | Characteristics | Calibration Date | Test Date | Due Date | Remark |
|---|---|---|---|---|---|---|---|---|
| Spectrum Analyzer | R&S | FSV40 | 101040 | 10Hz~40GHz | Aug. 07, 2019 | Oct. 14, 2019 | Aug. 06, 2020 | Conducted (TH01-KS) |
| Temperature & humidity chamber | Hongzhan | LP-150U | H2014011440 | -40~+150°C 20%~95%RH | Jul. 04, 2019 | Oct. 14, 2019 | Jul. 03, 2020 | Conducted (TH01-KS) |
| EXA Spectrum Analyzer | Keysight | N9010A | MY55150208 | 10Hz-44GHz | Apr. 16, 2019 | Oct. 29, 2019 | Apr. 18, 2020 | Radiation (03CH06-KS) |
| Bilog Antenna | TeseQ | CBL6111D | 44483 | 30MHz-1GHz | Dec. 28, 2018 | Oct. 29, 2019 | Dec. 27, 2019 | Radiation (03CH06-KS) |
| Double Ridge Horn Antenna | ETS-Lindgren | 3117 | 75959 | 1GHz~18GHz | Jan. 27, 2019 | Oct. 29, 2019 | Jan. 26, 2020 | Radiation (03CH06-KS) |
| Amplifier | SONOMA | 310N | 187289 | 9KHz ~1GHZ | Aug. 06, 2019 | Oct. 29, 2019 | Aug, 05, 2020 | Radiation (03CH06-KS) |
| high gain Amplifier | MITEQ | AMF-7D-00101800-30-10P | 2025788 | 1Ghz-18Ghz | Apr. 17, 2019 | Oct. 29, 2019 | Apr. 16, 2020 | Radiation (03CH06-KS) |
| AC Power Source | Chroma | 61601 | F104090004 | N/A | NCR | Oct. 29, 2019 | NCR | Radiation (03CH06-KS) |
| Turn Table | ChamPro | EM 1000-T | 060762-T | 0~360 degree | NCR | Oct. 29, 2019 | NCR | Radiation (03CH06-KS) |
| Antenna Mast | ChamPro | EM 1000-A | 060762-A | 1 m~4 m | NCR | Oct. 29, 2019 | NCR | Radiation (03CH06-KS) |

NCR: No Calibration Required

# 5 Uncertainty of Evaluation

The measurement uncertainties shown below were calculated in accordance with the requirements of ANSI 63.26-2015. All the measurement uncertainty value were shown with a coverage K=2 to indicate 95% level of confidence. The measurement data show herein meets or exceeds the CISPR measurement uncertainty values specified in CISPR 16-4-2 and can be compared directly to specified limit to determine compliance.

**Uncertainty of Radiated Emission Measurement (30 MHz ~ 1000 MHz)**

| | |
|---|---|
| **Measuring Uncertainty for a Level of Confidence of 95% (U = 2Uc(y))** | **2.5dB** |

**Uncertainty of Radiated Emission Measurement (1GHz ~ 18GHz)**

| | |
|---|---|
| **Measuring Uncertainty for a Level of Confidence of 95% (U = 2Uc(y))** | **2.1dB** |

# Appendix A. Test Results of Conducted Test

## Conducted Output Power (Average power)

| Conducted Power (*Unit: dBm) | | | |
|---|---|---|---|
| **Band** | **CDMA2000 BC10** | | |
| **Channel** | **476** | **580** | **684** |
| **Frequency** | **817.9** | **820.5** | **823.1** |
| **1xRTT RC1 SO55** | 24.13 | **24.22** | 24.21 |
| **1xRTT RC3 SO55** | 24.10 | 24.18 | 24.16 |
| **1xRTT RC3 SO32(+ F-SCH)** | 24.12 | 24.21 | 24.16 |
| **1xRTT RC3 SO32 (+SCH)** | 24.13 | 24.20 | 24.20 |
| **1xEVDO RTAP 153.6Kbps** | 24.11 | 24.19 | 24.19 |
| **1xEVDO RETAP 4096Bits** | 24.11 | 24.20 | 24.17 |

# 26dB Bandwidth

| Mode | CDMA BC10(MHz) |
|---|---|
| Mod. | 1xRTT |
| Lowest CH | 1.4246 |
| Middle CH | 1.4286 |
| Highest CH | 1.4286 |

## CDMA BC10 (1xRTT)

### Lowest Channel

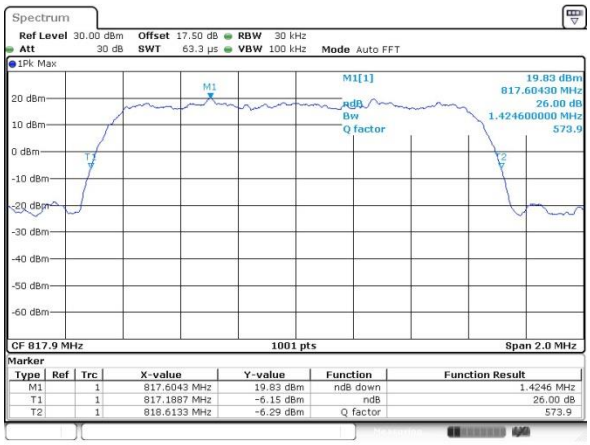


### Middle Channel

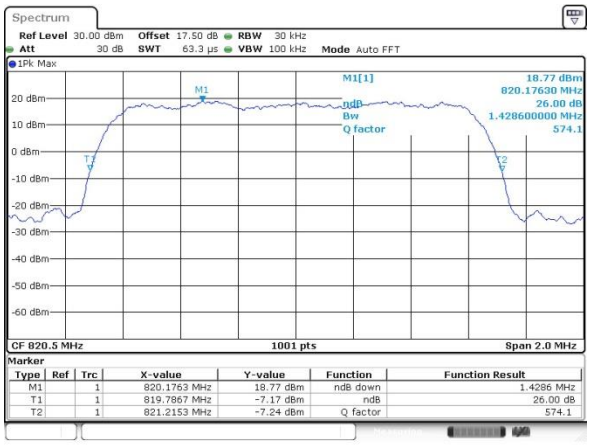


### Highest Channel

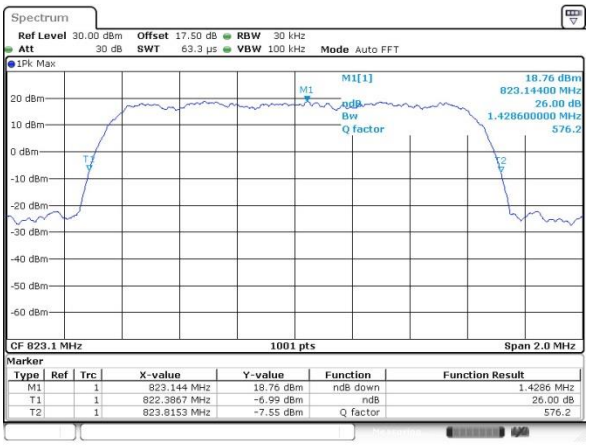

# Occupied Bandwidth

| Mode | CDMA BC10(MHz) |
|---|---|
| Mod. | 1xRTT |
| Lowest CH | 1.27 |
| Middle CH | 1.27 |
| Highest CH | 1.27 |

## CDMA BC10 (1xRTT)

### Lowest Channel

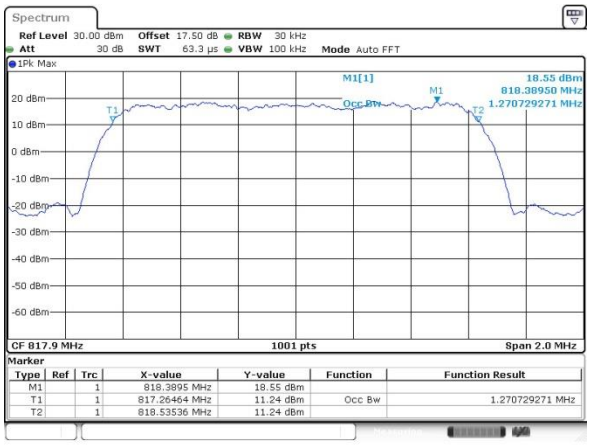


### Middle Channel

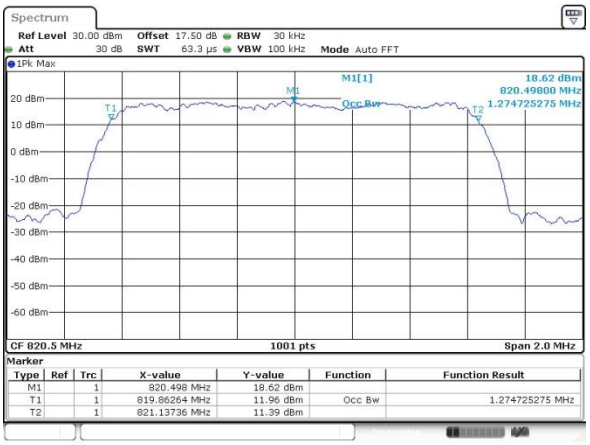


### Highest Channel

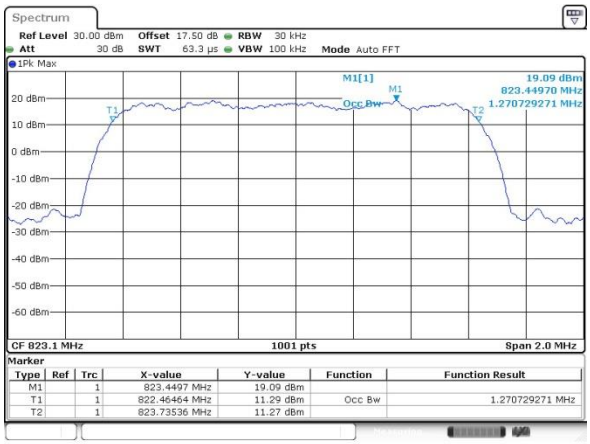

# Conducted Band Edge

## CDMA BC10 (1xRTT)

### Lowest Band Edge

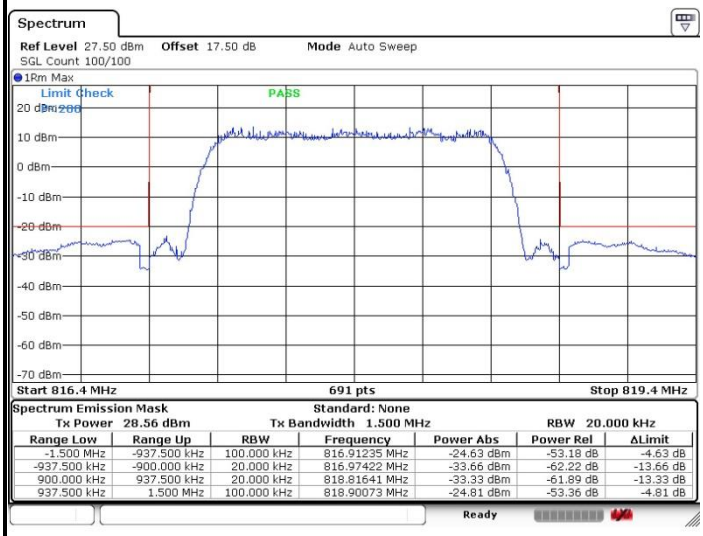


### Highest Band Edge

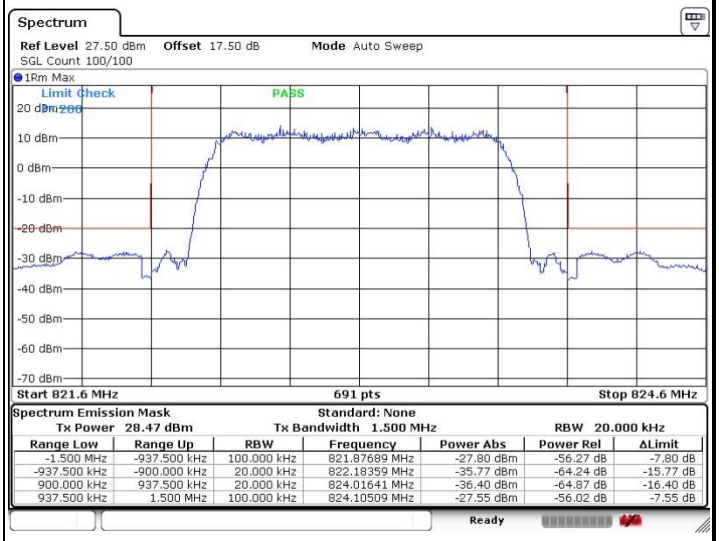

# Conducted Spurious Emission

## CDMA BC10 (1xRTT)

### Lowest Channel

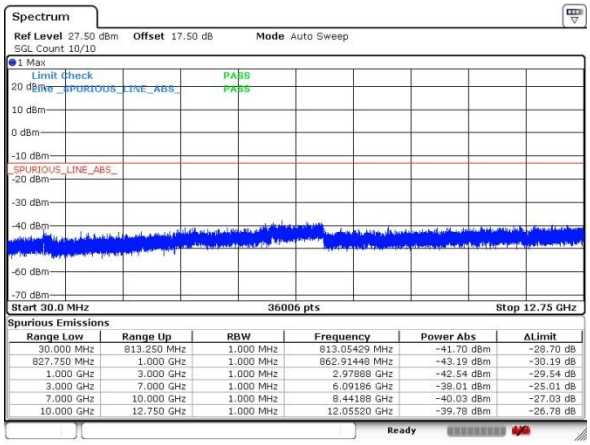


Spurious Emissions

| Range Low | Range Up | RBW | Frequency | Power Abs | ΔLimit |
|---|---|---|---|---|---|
| 30.000 MHz | 813.250 MHz | 1.000 MHz | 813.05429 MHz | -41.70 dBm | -28.70 dB |
| 827.750 MHz | 1.000 GHz | 1.000 MHz | 862.91448 MHz | -43.19 dBm | -30.19 dB |
| 1.000 GHz | 3.000 GHz | 1.000 MHz | 2.97888 GHz | -42.54 dBm | -29.54 dB |
| 3.000 GHz | 7.000 GHz | 1.000 MHz | 6.09186 GHz | -38.01 dBm | -25.01 dB |
| 7.000 GHz | 10.000 GHz | 1.000 MHz | 8.44188 GHz | -40.03 dBm | -27.03 dB |
| 10.000 GHz | 12.750 GHz | 1.000 MHz | 12.05520 GHz | -39.78 dBm | -26.78 dB |

### Middle Channel

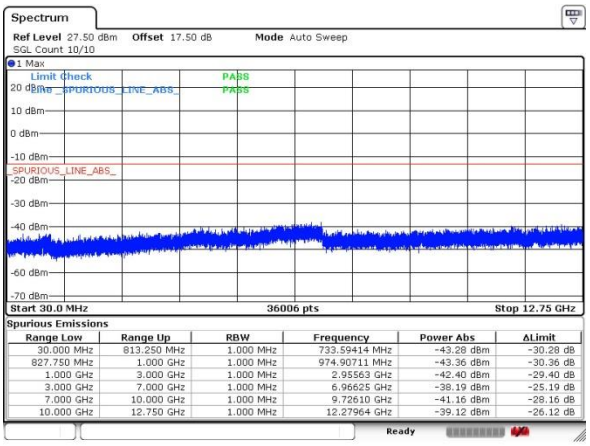


Spurious Emissions

| Range Low | Range Up | RBW | Frequency | Power Abs | ΔLimit |
|---|---|---|---|---|---|
| 30.000 MHz | 813.250 MHz | 1.000 MHz | 733.59414 MHz | -43.28 dBm | -30.28 dB |
| 827.750 MHz | 1.000 GHz | 1.000 MHz | 974.90711 MHz | -43.36 dBm | -30.36 dB |
| 1.000 GHz | 3.000 GHz | 1.000 MHz | 2.95563 GHz | -42.40 dBm | -29.40 dB |
| 3.000 GHz | 7.000 GHz | 1.000 MHz | 6.96625 GHz | -38.19 dBm | -25.19 dB |
| 7.000 GHz | 10.000 GHz | 1.000 MHz | 9.72610 GHz | -41.16 dBm | -28.16 dB |
| 10.000 GHz | 12.750 GHz | 1.000 MHz | 12.27964 GHz | -39.12 dBm | -26.12 dB |

### Highest Channel

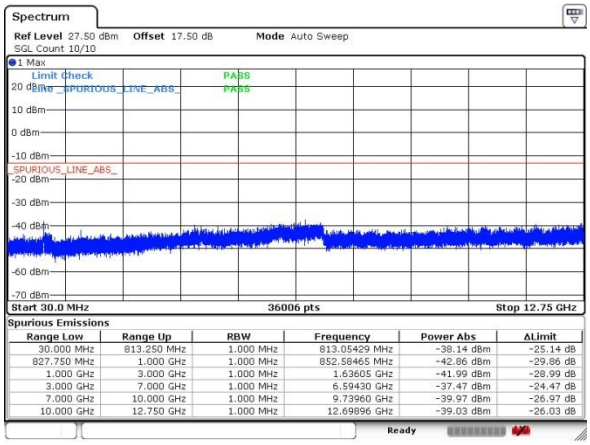


Spurious Emissions

| Range Low | Range Up | RBW | Frequency | Power Abs | ΔLimit |
|---|---|---|---|---|---|
| 30.000 MHz | 813.250 MHz | 1.000 MHz | 813.05429 MHz | -38.14 dBm | -25.14 dB |
| 827.750 MHz | 1.000 GHz | 1.000 MHz | 852.58465 MHz | -42.86 dBm | -29.86 dB |
| 1.000 GHz | 3.000 GHz | 1.000 MHz | 1.63605 GHz | -41.99 dBm | -28.99 dB |
| 3.000 GHz | 7.000 GHz | 1.000 MHz | 6.59430 GHz | -37.47 dBm | -24.47 dB |
| 7.000 GHz | 10.000 GHz | 1.000 MHz | 9.73960 GHz | -39.97 dBm | -26.97 dB |
| 10.000 GHz | 12.750 GHz | 1.000 MHz | 12.69896 GHz | -39.03 dBm | -26.03 dB |

# Frequency Stability

| Test Conditions | Middle Channel | CDMA BC10 (1xRTT) | Limit 2.5ppm |
|---|---|---|---|
| Temperature (°C) | Voltage (Volt) | Deviation (ppm) | Result |
| 50 | Normal Voltage | 0.0173 | PASS |
| 40 | Normal Voltage | 0.0076 | |
| 30 | Normal Voltage | 0.0280 | |
| 20(Ref.) | Normal Voltage | 0.0000 | |
| 10 | Normal Voltage | 0.0024 | |
| 0 | Normal Voltage | 0.0049 | |
| -10 | Normal Voltage | 0.0061 | |
| -20 | Normal Voltage | 0.0171 | |
| -30 | Normal Voltage | 0.0085 | |
| 20 | Maximum Voltage | 0.0232 | |
| 20 | Normal Voltage | 0.0017 | |
| 20 | Battery End Point | 0.0037 | |

**Note:** Normal Voltage = 3.8V；Battery End Point (BEP) = 3.6V；Maximum Voltage =4.4V

# Appendix B. Test Results of Radiated Test

| CDMA BC10 (1xRTT) | | | | | | | | |
|---|---|---|---|---|---|---|---|---|
| Channel | Frequency ( MHz ) | ERP ( dBm ) | Limit ( dBm ) | Over Limit ( dB ) | S.G. Power ( dBm ) | TX Cable loss ( dB ) | TX Antenna Gain (dBi) | Polarization (H/V) |
| Middle | 1642 | -64.61 | -13 | -51.61 | -71.58 | 1.58 | 10.70 | H |
| | 2460 | -57.40 | -13 | -44.40 | -65.65 | 2.102 | 12.50 | H |
| | 3282 | -63.06 | -13 | -50.06 | -71.95 | 2.856 | 13.90 | H |
| | 1642 | -65.75 | -13 | -52.75 | -72.72 | 1.58 | 10.70 | V |
| | 2462 | -59.96 | -13 | -46.96 | -68.21 | 2.10 | 12.50 | V |
| | 3282 | -63.99 | -13 | -50.99 | -72.88 | 2.86 | 13.90 | V |

Remark: Spurious emissions within 30-1000MHz were found more than 20dB below limit line.