INSTRUCTION MANUAL

The following is a draft copy of the instruction manual.

Cellular Telephone

User Manual DRAFT

August 13, 1999

Welcome

Thank you for choosing your Motorola phone from a global leader in communications technology. All Motorola digital cellular phones are designed and manufactured to meet Motorola's rigorous specifications and world-class quality standards. During development, our laboratory testing team took your cellular phone through rigorous durability tests including temperature, humidity, shock, dust, vibration, and drop tests—and the phone still worked!

We are confident that the phone you purchased will meet your own exacting standards. Enjoy your Motorola phone.

Contents

Welcome i

Safety Information v

Overview 10
Phone Overview 10
Understanding the Guide 11

Using the Battery 12
About Your Batteries 12
Installing and Removing Batteries 14
Checking Battery Levels 15
Charging Batteries 16

Using the Phone 18
Turning the Phone On and Off 18
Reading the Indicators 19
Standby Mode 20
Placing a Call 21
Ending a Call 21
Receiving a Call 22
Switching Between Digital and
Analog Modes 22
Redialing a Number 23
Controlling Volume 24

Using Phone Memory 25
Using Your Phone's Built-in Phone Book 26
Storing Names and Numbers 26
Recalling an Entry by Name 28
Recalling an Entry by Memory Location 28
Clearing a Phone Memory Entry 29
Shortcuts for Recalling Phone Book Entries . . 29
Making Notes on the Scratchpad 30

Using the Menu System 31
Introducing the Menu Features 31
Navigating the Menu 32
Road Maps 32

Managing Recent Calls 33
Road Map for Recent Calls 33
About Recent Calls 33
Reviewing Received Calls 35
Reviewing Dialed Calls 36
Clearing Caller Line ID 37

Managing the Phone Book 38
Road Map for Phone Book 38
Recalling an Entry by Name 39
Recalling an Entry by Location 39
Storing with the Menu 40
Storing and Placing Numbers with Pause Dialing 41
Storing and Placing Numbers for Calling Card Information 43
Editing a Memory Location 46
Assigning an Individual Ring Style to a Phone Book Entry 48

Timing Your Calls 50
Road Map for Call Timers 50
Viewing the Individual Call Timer 51
Viewing the Resettable Call Timer 51
Viewing the Cumulative Timer 52
Resetting the Timer 52
Displaying the Individual Timer Automatically 53
Setting the One-Minute Audible Timer 53
Setting the Repeating Audible Timer 54
Setting the Single Timer 54

Adjusting Tone Controls 56
Road Map for Tone Controls 56
Selecting Call Alert Type 57
Selecting Message Alert Type 58
Selecting a Ring Style 59
Turning Keypad Tones On and Off 60
Turning Scratchpad Tones On and Off 60

Using Lock/Security Features 61
Road Map for Lock Security 61
Activating Voice Privacy 62
Locking/Unlocking Your Phone 63
Activating Priority Calling 64
Managing Security Options 65

Customizing Phone Options 72
Road Map for Phone Options 72
Activating Pager Mode 73
Selecting Call Mode Preference 74
Viewing Your Own Number 75
Switching Between Numbers 76
Selecting a Cellular System 78
Reviewing Feature Settings 79
Activating Automatic Hands-Free 80
Activating Multiple Key Answer 81
Activating Automatic Answer 81
Selecting Battery Options—
Power Save Mode 82
Displaying System Identification 82
Selecting Language 83

Using Voice Mail and Text Messages 84
Road Map for Message Center 84
Voice Mail Alerts 85
Dialing Voice Mail 85
Editing the Voice Mail Number 86
Reading Text Messages 87
Setting the Scrolling Speed 92

Reference Information 93
Accessory Options 93
Troubleshooting 95

Glossary 98

Index 103

Patent Information 107

Safety Information

Important: Read this information before using your wireless handheld phone.

Exposure to Radio Frequency Signals

Your wireless handheld portable telephone is a low power radio transmitter and receiver. When it is ON, it receives and also sends out radio frequency (RF) signals.

In August 1996, The Federal Communications Commissions (FCC) adopted RF exposure guidelines with safety levels for handheld wireless phones. Those guidelines are consistent with safety standards previously set by both U.S. and international standards bodies:

- American National Standards Institute (ANSI) IEEE. C95. 1-1992
- National Council on Radiation Protection and Measurement (NCRP) Report 86
- International Commission on Non-Ionizing Radiation Protection (ICNIRP) 1996

Those standards were based on comprehensive and periodic evaluations of the relevant scientific literature. For example, over 120 scientists, engineers, and physicians from universities, government health agencies, and industry reviewed the available body of research to develop the ANSI Standard (C95.1).

The design of your phone complies with the FCC guidelines (and those standards).

Antenna Care

Use only the supplied or an approved replacement antenna. Unauthorized antennas, modifications, or attachments could damage the phone and may violate FCC regulations.

Phone Operation

Normal Operation

Hold the phone as you would any other telephone, with the antenna pointed up and over your shoulder.

Tips on Efficient Operation

To operate your phone most efficiently:

- Extend your antenna fully.
- Do not touch the antenna unnecessarily when the phone is in use. Contact with the antenna affects call quality and may cause the phone to operate at a higher power level than otherwise needed.

Batteries

Caution: All batteries can cause property damage, injury, or burns if a conductive material, such as jewelry, keys or beaded chains, touches exposed terminals. The material may complete an electrical circuit and become quite hot. To protect against such unwanted current drain, exercise care in handling any charged battery, particularly when placing it inside your pocket, purse, or other container with metal objects. When the battery is detached from the phone, your batteries are packed with a protective battery cover; please use this cover for storing your batteries when not in use.

Driving

Check the laws and regulations on the use of wireless telephones in the areas where you drive. Always obey them. Observe the following guidelines when using your phone while driving.

- Give full attention to driving--driving safely is your first responsibility.
- Use hands-free phone operation, if available.

- Pull off the road and park before making or answering a call if driving conditions so require.

Electronic Devices

Most modern electronic equipment is shielded from RF signals. However, certain equipment may not be shielded against the RF signals from your wireless phone.

Pacemakers

The Health Industry Manufacturers Association recommends that a minimum separation of six inches (6") be maintained between a handheld wireless phone and a pacemaker to avoid potential interference with the pacemaker. These recommendations are consistent with the independent research by and recommendations of Wireless Technology Research.

Persons with pacemakers:

- should ALWAYS keep the phone more than six inches from their pacemaker when the phone is turned ON
- should not carry the phone in a breast pocket
- should use the ear opposite the pacemaker to minimize the potential for interference
- should turn the phone OFF immediately if you have any reason to suspect that interference is taking place

Hearing Aids

Some digital wireless phones may interfere with some hearing aids. In the event of such interference, you may want to consult your hearing aid manufacturer to discuss alternatives.

Other Medical Devices

If you use any other personal medical device, consult the manufacturer of your device to determine if it is adequately shielded from external RF energy. Your physician may be able to assist you in obtaining this information.

Turn your phone OFF in health care facilities when any regulations posted in these areas instruct you to do so. Hospitals or health care facilities may be using equipment that could be sensitive to external RF energy.

Vehicles

RF signals may affect improperly installed or inadequately shielded electronic systems in motor vehicles. Check with the manufacturer or its representative regarding your vehicle. You should also consult the manufacturer of any equipment that has been added to your vehicle.

Posted Facilities

Turn your phone OFF in any facility where posted notices so require.

Aircraft

FCC regulations prohibit using your phone while in the air. Switch OFF your phone before boarding an aircraft.

Blasting Areas

To avoid interfering with blasting operations, turn your phone OFF when in a “blasting area” or in areas posted: “Turn off two-way radio.” Obey all signs and instructions.

Potentially Explosive Atmospheres

Turn your phone OFF and do not remove your battery when you are in any area with a potentially explosive atmosphere. Obey all signs and instructions.

Sparks from your battery in such areas could cause an explosion or fire resulting in bodily injury or even death.

Areas with a potentially explosive atmosphere are often but not always clearly marked. They include, but are not limited to: fueling areas such as gasoline stations; below deck on boats; fuel or chemical transfer or storage facilities; areas where fuel odors are present (for example, if a gas/propane leak occurs in a car or home); areas where the air contains chemicals or particles, such as grain, dust, or metal powders; and any other area where you normally would be advised to turn off your vehicle engine.

For Vehicles Equipped with an Air Bag

An air bag inflates with great force. Do NOT place objects, including both installed or portable wireless equipment, in the area over the air bag or in the air bag deployment area. If in-vehicle wireless equipment is improperly installed and the air bag inflates, serious injury could result.

US050498

Overview

Phone Overview

See the inside front cover of this guide for a diagram of the components described below.

Antenna—Provides superior connectability. Does not extend.

Earpiece—Ultra-compact phone speaker.

Accessory Connector Port—Provides the connections for an external power supply and vehicular and data accessories.

Headset Jack—Provides the connection for an optional headset.

Microphone—Positioned for convenient conversation.

Function Keys

—Turns the phone On and Off.

FCN—Acts as a “shift” key to access the secondary functions of other keys.

RCL—Recalls phone numbers from memory.

STO—Stores phone numbers into memory.

CLR—Clears characters from the screen.

END—Ends phone calls.

SND—Places or answers calls.

—Can be used to scroll through memory entries and menu features. Also used to adjust keypad, earpiece, and ringer volume.

(**Message Center Button)**—Allows access to digital messages and voice mail messages.

Understanding the Guide

Key Presses

Key presses are represented in this guide using symbols so that you may locate and use the required sequence quickly. A sequence of key presses may be shown as follows:

FCN 0 OPR 7 PQRS CLR

This means you should press FCN followed by 0 OPR, 7 PQRS, and then CLR, in sequence, not simultaneously.

Prompts and Messages

Your phone responds to key presses by displaying either a prompt that guides you to the next action or a message confirming that your action is complete. Prompts and messages are represented in this guide in LCD style, for example: Reset Timer.

Short Cuts and Tips

In the margins of your guide are short cuts and useful hints and ways to improve your phone's performance. These are especially helpful for experienced Motorola Users, who can find many of the same key sequences used with other Motorola models.

Using the Battery

About Your Batteries

Your phone uses Nickel Metal Hydride (NiMH) batteries in either AAAL or AA sizes.

Note: In an emergency, you can use four AA alkaline batteries for 5-10 minutes of talk time.

Battery Talk-Time and Standby-Time

Talk-time refers to the time you can talk on your phone before the battery is fully discharged. *Standby-time* is the time that your phone is on but not used for talking.

Notes:

- Talking on the phone uses more power than leaving it idle. The more power you use for talking, the less you'll have for standby-time, and vice-versa.
- All times are approximate and depend on the battery used, network configuration, signal strength, and the features selected.
- Talk and standby times are lower in analog mode.
- Your phone operates more efficiently in Digital mode. If the D icon is displayed, your phone's performance is reflected in the digital section of the table below. Otherwise, refer to the Analog section.

The following table shows ranges for battery talk-times and standby times.

Battery	Digital		Analog	
	Talk (up to)	**Standby (up to)**	**Talk (up to)**	**Standby (up to)**
AAAL NiMH (700mAH)	80 min.	100 hrs.	55 min.	30 hrs.
AA NiMH (1200mAH)	135 min.	160 hrs.	75 min.	50 hrs.

Storing and Disposing of Batteries

To prolong the life of your batteries, do not expose them to temperatures below -10°C (14°F) or above 45°C (113°F). Always take your phone with you when you leave your car.

To dispose of batteries, check with your local recycling center for a battery recycler near you. Never dispose of batteries in a fire.

Caution: To prevent injuries or burns, do not allow metal objects to contact or short-circuit the battery terminals.

Installing and Removing Batteries

Installing a Battery

1. Remove the battery cover:

   a. Press down on the the tab at the top of the battery cover.

   b. Slide the cover back, and remove it from the phone.

2. Insert the battery into the phone:

   a. Insert the top of the battery and push it against the springs at the top of the battery compartment.

   (The black plastic "foot" of the battery should be at the other end of the battery and pointed to the left.)

   b. Fit the bottom end of the battery into place in the battery compartment.

3. Replace the battery cover:

   a. Position the tabs on the underside of the cover into the openings on the edges of the battery compartment.

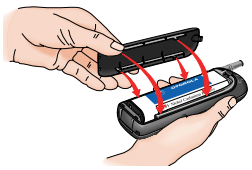

   b. Lower the cover into place, and slide it forward until it snaps shut.

Removing a Battery

1. Press to turn your phone off.
2. Remove the battery cover:
   a. Press down on the the tab at the top of the battery cover.

   b. Slide the cover back, and remove it from the phone.

3. Grasp the battery near its bottom end, pull straight up, and then remove the battery from the compartment.

Checking Battery Levels

Battery Level Indicator

The three bar segments on your phone's Battery Level Indicator display the amount of charge remaining in your battery. The more segments visible, the greater the charge.

For a detailed battery level reading:

Press FCN 4 BATT CHR.

The following is displayed:

The more segments filled on the fuel gauge, the greater the charge.

High

Low

Low Battery Warning

When the battery level is low and only a few minutes of talk-time remain, your phone signals you in three ways:

- Low Battry appears in the first line of the display.
- No bar segments are highlighted.
- A short tone plays periodically.

To confirm low battery signals:

Press FCN 4 BATT CHI.

Charging Batteries

Using the Internal Charger

Tip:
You can still place and answer calls while using either the internal charger or the cigarette lighter adapter. Remember that talking on the phone requires energy, so charging takes more time. To place the phone in charger-only mode, press once.

Your phone has a built-in battery charger. Using either the AC or cigarette lighter adapter, you can plug the handset directly into a power source to charge any attached batteries.

To charge:

1. Plug the AC adapter or cigarette lighter adapter into the accessory connector on the bottom of your phone as shown, with the release tab facing up.

2. Plug the power adapter into an electrical outlet.

   or

   Plug the cigarette lighter adapter into the cigarette lighter opening in the vehicle.

   In both cases, a beep-tone sounds, and the battery icon flashes.

See “Charge Times” on page 17 for charge times.

Battery Charging Tips

To ensure that you enjoy maximum battery life and use your battery to its fullest capacity:

- Always use Motorola approved battery chargers.
- The battery should be at or near room temperature when charging.
- When you don't intend to use a battery for a while, store it uncharged in a cool, dark, dry place, such as a refrigerator.
- Do not leave a NiMH battery connected to any charger for longer than 24 hours.

A new NiMH battery may require several full charge/discharge cycles in order to achieve its optimum performance. After this initial charge, you can recharge your battery at your convenience, using the phone's travel charger.

Quick Change Power Source ("Seamless Connection")

The quick change feature enables you to switch power sources while a call is in progress without losing the call. If you hear a low-battery warning while you are in a call, plug in the Cigarette Lighter Adapter or AC Adapter.

Charge Times

Locate your battery by type to see how long your battery takes to charge to a 90% power level:

Battery Type	Charge Time—Internal Charger
NiMH AAAL (700 mAH)	4 hrs.
NiMH AA (1200 mAH)	6 hrs.

After the battery reaches 90%, it begins to slow charge until it is fully charged. It is normal for batteries to become warm during charging.

Using the Phone

Turning the Phone On and Off

1. To turn the phone on, press and hold ⏻ until the display appears and you hear an audible alert.
2. Press and hold ⏻ again to turn the phone off. Powering off will be displayed, and you will hear an audible alert.

What You Will See

When you turn on your phone, it performs a self-test to let you know it is operational. When the test is completed, the display shows:

- one of several possible greetings, such as:
  - the name of your Service Provider

  or

  - an indication of local or non-local coverage area
- your phone number
- the Digital or Analog icon

Reading the Indicators

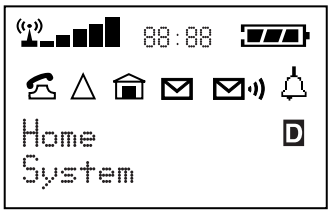

Signal Strength Indicator

High

Low

The Signal Strength Indicator (SSI) indicates the strength of your phone's connection with the local cellular system. A strong signal increases your chances of placing and receiving calls. Low signal strength can occur in a fringe area of the cellular system. Buildings, tunnels, and bad weather can block or interfere with reception.

Digital Indicator

If you are in a digital coverage area, the digital indicator flashes.

Analog Indicator

If you are in an analog coverage area, the analog indicator flashes.

In Use Indicator

The In Use (IU) Indicator flashes when a call is in progress.

In-Building Indicator

The In-Building Indicator lights when the phone accesses an In-Building Cellular System or other non-public system.

No Service Message

If you travel beyond the range of a cellular system, the No Service message flashes to let you know that calls cannot be placed or received from your location.

SMS Message Waiting Indicator

The Short Message Service (SMS) Message Waiting Indicator is displayed when the phone receives a message. The symbol flashes when your message storage area is full. (This is an optional, network and subscription-dependent feature that is not available in all areas.)

Voice Message Waiting Indicator

The Voice Message Waiting Indicator is displayed when your Voicemail has received a message. (This is an optional, network and subscription-dependent feature that is not available in all areas.)

Battery Level Indicator

High

Low

The three bar segments on the Battery Level Indicator show the amount of charge remaining in your battery. The more segments you see, the greater the charge. The phone alerts you to a low charge in three ways:

- No bar segments are highlighted.
- Low Battry appears on your screen.
- A short tone plays periodically.

Standby Mode

To conserve energy, your phone may turn off its lights when in standby mode. The display comes back the next time you press a key.

Placing a Call

To place a call:

1. First, turn the phone on. Press and hold ⏻ until the display appears and you hear an audible alert.
2. Enter the number you want to call.
   - Press CLR to erase one digit at a time if you make a mistake.
   - Press and hold CLR to clear the entire entry.

   You can also recall a previously dialed or stored number. (See “Using Phone Memory” on page 25 for details on storing or recalling.)
3. Press STO to place the call.

   You will hear a two-tone alert (if the keypad tones are turned on) and see Dialing XXXXXXX.
4. You can dial phone numbers with up to 32 digits, but only the last 20 digits appear in the display.

   Press RCL to see the entire phone number.

Ending a Call

To end a call:

Press END.

Receiving a Call

Your phone must be powered on to receive calls.

To answer a call:

Press SND when the phone rings.

Unanswered Call Indicator

When you cannot take a call, your phone keeps a count of your unanswered calls and alerts you with the message `Missed XX Calls`, where *XX* is the number of missed calls.

Note: Calls without caller ID information are not stored.

Terminating the Ring Indicator

You can terminate the ring indicator by pressing either of the volume keys during the ring cycle.

Switching Between Digital and Analog Modes

During a call, you can switch from digital to analog mode, or from analog to digital:

To switch modes, press FCN 2 ABC.

Your phone selects the TDMA digital system, depending upon availability, or the analog system.

Note: Once you switch from digital to analog mode, you can not switch back to digital mode until you turn your phone off and on again.

Redialing a Number

Automatic Redial

A fast busy signal indicates that the cellular system is busy. With Automatic Redial, your phone calls continuously for the next four minutes.

When it makes a connection, the phone rings. You can distinguish this ring because it is half as long as the ring for a new incoming call. When the person you are calling answers, you can begin talking.

If you hear a fast busy signal:

1. Press SND. You will see `Press SND to Redial`.
2. Press SND to redial.

   If the call does not go through after four minutes:

   Press SND to continue the call attempt.

If you hear an ordinary busy signal:

1. Press END to hang up.
2. Press SND to redial the busy number.

   You will see `Dialing 5551234`.

Controlling Volume

Adjusting Volume

Use the upper and lower volume keys to adjust earpiece, keypad, and ringer volume. When you press these keys, the phone's speaker demonstrates the current volume level.

To adjust earpiece and keypad volume:

Press ◀▶ to raise or lower the volume.

To adjust the ringer volume:

1. Press FCN.
2. Press ◀▶ to raise or lower the ringer volume.

Muting the Microphone

For privacy during a call, mute the microphone. You can hear the person on the other end, but he or she cannot hear you.

1. Press FCN 6 MUTE MNO to mute the microphone. You will see Mute.
2. Press FCN 6 MUTE MNO again to resume normal conversation.

Using Phone Memory

Use your phone's internal Phone Book to store up to 99 names and numbers for easy access.

In this chapter you will learn how to:

- store names and numbers into the Phone Book
- recall phone numbers from memory
- clear names and numbers
- dial a number with Speed Dial and Turbo Dial™
- make notes on the scratchpad

Using Your Phone's Built-in Phone Book

Each phone number in your phone book is stored in a *memory location* numbered 01-99.

Arrange numbers for easy recall by storing related numbers in groups. If you store the numbers you call most in locations 01-09, then you can use Turbo Dial™ to call those numbers with a single key. (See "Using the Turbo Dial™ Function" on page 30 for details.)

You can also store names to identify phone numbers. Later, you can recall a number by the name that corresponds to it.

Storing Names and Numbers

How to Store Phone Numbers

1. Enter the phone number you want to store.
2. Press STO to begin storing.

   The phone prompts you to enter a memory location. You will see Location —.
3. Enter the two-digit memory location where you want the sequence stored.

   or

   Press ◄► to store the sequence in the first available location.

   or

   Enter the first digit of the memory location, then press ◄► to store the sequence in the first available location beginning with that digit.
4. Enter a name to identify the phone number. (See the following section for details on entering names.) You will see Alpha Or Sto.

5. Press STO when you finish entering the name.

   Your phone confirms your entry by displaying the information you stored.

How to Enter Letters and Numbers

When the display shows Alpha Or Sto, you can press the numeric keys one or more times to produce any letter or number in the alphabet. Use the letters printed on each key as a guide. For example, press 2 ABC to enter “A,” “B,” “C,” or “2” as shown:

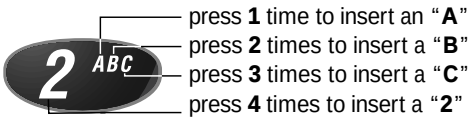

How to Enter a Name

1. Enter a letter by pressing a key as many times as necessary. Enter punctuation by pressing 1 MENU as many times as indicated by the chart below. Pressing 1 MENU a single time produces a single space.

2	3	4	5	6	7	8	9	10
1	/	'	,	?	$	.	&	!

   The cursor advances automatically to the next space after you enter a letter or after three seconds of inactivity. If you are repeating a character, then press ◄► to advance the cursor to the next space.

2. Press ◄► (to backspace) or CLR to erase a letter if you make an error.

3. Press STO when you finish entering the name.

   Your phone confirms your entry by displaying the information you stored.

Tip:
Press the upper or lower volume key first, to toggle between upper and lower case letters.

Recalling an Entry by Name

After storing names and numbers, you can recall them alphabetically and immediately place calls.

1. Press FCN 3 NAME DIR to enter your name directory.
2. Press ◀ ▶ to scroll to the name you are looking for.

   or

   Enter the first letter of the name you want to recall. The display shows the first name in the phone book that begins with that letter. If no entry beginning with that letter is found, No A's is displayed.

   When the name is displayed, the corresponding number is displayed in the lower right corner of the display, and the phone memory location is displayed to the right of the name.
3. Press SND to call the number you selected.

Recalling an Entry by Memory Location

Each name and number you store is placed in a memory location numbered 01-99. Once you have stored names and numbers, you can recall them by memory location:

1. Press RCL.
2. Enter the two-digit memory location of the phone number you want.
3. Press SND to call the number you selected.

Clearing a Phone Memory Entry

Clearing an Entry by Name

1. Recall by name the entry that you want to erase. (See “Recalling an Entry by Name” on page 28.)
2. Press CLR to clear the entry.

   You will see Clear Entry?.
3. Press STO to confirm that you want to erase the entry.

   The numbered location of the cleared entry is shown in the display.

Clearing an Entry by Location Number

1. Press CLR to clear the display.
2. Press STO and the location you want to clear.

   You will see XX Full Change?
3. Press STO to confirm that you want to erase the entry.

Shortcuts for Recalling Phone Book Entries

Using Speed Dial

If you know the memory location of the number you want to call, try the Speed Dial function:

1. Enter the two-digit memory location (01-99).
2. Press SND to place the call.

Using the Turbo Dial™ Function

The Turbo Dial™ function enables you to dial numbers stored in locations 01-09 with the push of a single button:

> Press and hold a number 1 through 9 on the keypad, and your call is placed. You will hear a two-tone alert afterwards.

Your phone's Priority Call feature gives you fast access to any number stored in location 01. To learn more about this feature, see "Activating Priority Calling" on page 64.

Making Notes on the Scratchpad

In addition to your internal phone book, you also have a built-in scratchpad for making quick notes. The scratchpad remembers the last phone number shown on your display.

Entering a Number in the Scratchpad

If you are on the phone and your party gives you another number to call, enter the number on the scratchpad so you can place the call later.

1. Enter the number into the keypad. (The person on the line can hear tones as you dial.)
2. Press END to end the current call, if necessary.
3. Press SND to call the number you saved on the Scratchpad.

Storing Numbers During a Call

You can also store numbers during a call:

1. Enter the number into the keypad. (The person on the line can hear tones as you dial.)
2. Press STO and continue storing with step 3 in "Storing Names and Numbers" on page 26.

Using the Menu System

Your Motorola cellular phone includes many features to help you be more productive. The phone's user-friendly menu system helps you find what you need quickly and easily.

In this chapter you will learn:

- what are the main menu features
- how to navigate through the menus
- how to read a menu road map

Introducing the Menu Features

As you scroll through the menu system, you will see the following icons, each representing a high-level menu.

Recent Calls

Phone Book

Timers

Tone Control

Lock Secure

Phone Options

Navigating the Menu

Use these keys to navigate the menu system:

To enter the menu system:	Press FCN, then press 1 MENU. (“menu” is printed on the 1 MENU key as a reminder.)
To scroll to the desired menu selection:	Press ◀▶.
To select a menu item:	Press STO.
To "unselect" a menu item:	Press CLR.
To exit the menu:	Press END.

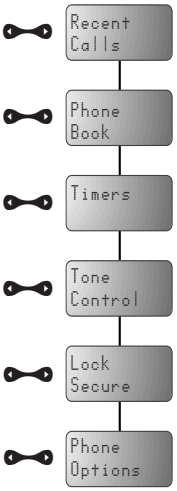

Road Maps

To help you navigate through the phone’s menu system, each chapter begins with an easy-to-follow visual “road map.” Simply press the key shown, and observe the message that appears in the display. For example, try this:

1. Press FCN 1 MENU.
2. Press ◀▶ to scroll through the menu’s top level, shown here in the margin.
3. Press END to exit the menu.

Detailed instructions within each chapter describe how each feature works.

Managing Recent Calls

Road Map for Recent Calls

To enter the menu system:

Press FCN 1 MENU.

Start:

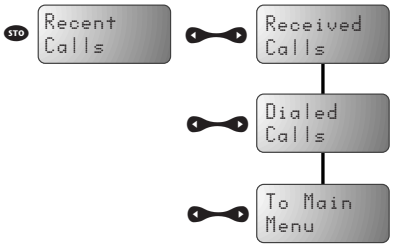

About Recent Calls

The Recent Calls menu enables you to review calls that you have received or dialed. Here are some tips and information about reviewing recent calls:

- Your phone can store the telephone numbers and names of the last ten incoming calls.
- If the caller's phone number matches a number stored in the phone's memory, the phone automatically displays the name associated with that number.
- If you subscribe to call waiting and receive a call during an active call:
  - You hear a call waiting tone.
  - The caller's name and number appear on the display.

The caller's name and number are automatically stored. You can view them after ending the call. (See "Reviewing Received Calls" on page 35.)

- Caller Line ID enables you to view the caller's name and number while the phone is ringing. Caller Line ID is optional and is not available in all markets. Contact your Service Provider for availability information.
- If the caller has restricted the transmission of his/her phone number, your phone displays Private. If the Calling Number ID information is not available to the cellular network, your phone displays No ID.
- You can store any number contained in your Caller Line ID memory to a memory location in the same way you save any phone number. When the correct number is displayed, press STO and a memory location, or STO ◀▶, to autoload. See "Storing with the Menu" on page 40 for more information on storing phone numbers.
- When you select Received Calls, the number of received calls is displayed. However, if a call is private or has no Caller Line ID number, then its actual phone number is not displayed and is not included in the count of missed calls.

Getting to Recent Calls

1. **Press** FCN, then press 1 MENU to enter the menu system.
2. When you see **Recent Calls**, press STO to select.
3. **Press** ◀▶ to scroll to the following features.

Reviewing Received Calls

1. Follow the steps in the "Getting to Recent Calls…" block to scroll to Received Calls. The total numbers of received calls stored is displayed in the upper right corner. If there are no numbers in the Caller Line ID list, you will see 00 in the upper right corner.
2. Press STO to enter your Caller Line ID number list of received calls.
3. Press ◀▶ to scroll through the list.

   The display shows the order in which the call was received in the upper right corner, with the phone number and name of the calling party (if available).

   The received call list can range from 01 (the most recent previous phone call) to 10 (the least recent phone call).
4. Press SND to dial the displayed number.

Reviewing Dialed Calls

1. Follow the steps in the ”Getting to Recent Calls…” block to scroll to Dialed Calls.

   The total number of dialed calls that are stored is displayed in the upper right corner. You can see up to the last twenty numbers dialed. If there are no numbers in the Caller Line ID list, you will see 00.

2. Press STO to enter your dialed calls list.

   or

   Press RCL 0 OPR 0 OPR.

3. Press ◀▶ to scroll through the list. The dialed call list can range from 01 (the most recent dialed phone call) to 10 (the least recent dialed phone call).

   The display shows:

   - the order of the number of the previously dialed phone call in the upper right corner, with the phone number and name of the party called
   - the name, if the number dialed matches a phone book entry

4. Press SND to dial the displayed number.

Clearing Caller Line ID

To **erase all entries** saved in your Caller Line ID memory:

1. Press and hold CLR when a Caller Line ID name and number is displayed. You will see `Clear All?`.
2. Press CLR to clear.

   or

   Press END to leave your Caller Line ID memory intact.

To **erase a single entry** saved in your Caller Line ID memory:

1. Press CLR or any other key when a Caller Line ID name and number is displayed. You will see `Clear Entry?`.
2. Press CLR to clear.

   or

   Press END to leave your Caller Line ID memory intact.

Tip: *To erase **all** entries you must press and hold CLR, whereas to erase a **single** entry you simply press CLR.*

Managing the Phone Book

Road Map for Phone Book

To enter the menu system:

Press FCN 1 MENU.

Start:

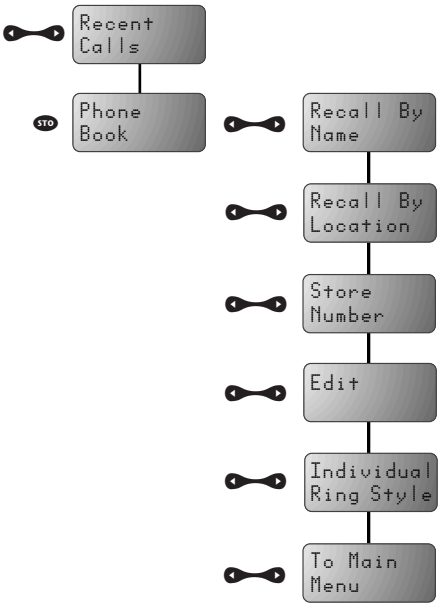

Getting to Phone Book...

1. **Press** FCN, then press 1 MENU to enter the menu system.
2. **Press** ◀▶ to scroll to **Phone Book,** and press STO to select.
3. **Press** ◀▶ to scroll to the following features, and press STO to select.

Recalling an Entry by Name

To recall a stored name with the Phone Book menu:

1. Follow the steps in the "Getting to Phone Book..." block above to select Recall By Name. You will see Enter 1st Letter.
2. Enter the first letter of the name you want to recall. The display shows the first name in the phone book that begins with that letter. If no entry beginning with that letter is found, No A's is displayed.
3. Press ◀▶ to scroll to the name you want.
4. Press SND to call the number you selected.

Recalling an Entry by Location

Each name and number you store is placed in a memory location numbered 01-99. After storing names and numbers, you can recall them by memory location with the Phone Book menu.

1. Follow the steps in the "Getting to Phone Book..." block above to select Recall By Location. You will see Location —.
2. Enter the two-digit memory location of the number you want.
3. Press SND to call the number you selected.

Storing with the Menu

Use the phone's menu system to store names and numbers into the Phone Book.

1. Follow the steps in the "Getting to Phone Book…" block to select Store Number. You will see Enter Number.
2. Enter the phone number you want to store. See "How to Enter Letters and Numbers" on page 27.
3. Press STO when you finish entering the number.

   You will see Location —.
4. Press ◄► to store the sequence in the next available location.

   or

   Enter the first digit of the memory location and press ◄► to store the sequence in the first available location beginning with that digit.

   or

   Enter the two-digit memory location where you want the sequence stored.
5. Enter a name to identify the phone number, or skip this step and continue with step 6. (See "How to Enter a Name" on page 27 for details on entering names.)
6. Press STO when you finish entering the name. Your phone confirms your entry by displaying the location, number, and name you stored. Proceed with step 7 below, or return to step 2 above to store more numbers.
7. Press END to exit the menu.

Tip:
You will see Alpha Or Sto. *If the chosen location is full, press* END *and restart the storing sequence.*

Getting to Phone Book...

1. **Press** FCN, then press 1 MENU to enter the menu system.
2. **Press** ◀▶ to scroll to **Phone Book,** and press STO to select.
3. **Press** ◀▶ to scroll to the following features, and press STO to select.

Storing and Placing Numbers with Pause Dialing

Entering a Pause in a Number

When you call automated systems, a recorded message prompts you for PIN numbers, Voice Mail numbers, etc.

You can store these numbers in your phone's memory, separated by "pauses"—special characters that tell your phone to wait before sending additional numbers.

1. Follow the steps in the "Getting to Phone Book…" block above to select `Store Number`.You will see `Enter Number`.
2. Enter the phone number you use to access the automated system.
3. Press FCN, then press SND.

   You will see `Insert Pause o`.
4. Press STO to insert a pause (o) into the sequence.
5. Enter the next group of numbers (such as an account number or PIN number.)
6. Enter any other required symbols (such as * or #).

7. Insert another pause, and enter the next group of numbers by repeating steps 3 through 5 as many times as necessary.

   You can store up to 32 digits, including pauses. Then store the entire sequence as you would any phone number.

8. Press STO to begin storing.

   You will see Location —.

9. Enter the two-digit memory location where you want the sequence stored.

   You will see Alpha Or Sto.

10. Enter a name for your sequence.

    (See “How to Enter a Name” on page 27 for details on entering names.)

11. Press STO when you finish entering the name.

    Your phone confirms your entry by displaying the location, number, and name you stored.

Placing a Call with Pauses

To use your stored sequence:

1. Recall the stored number with the pause inserted.
2. Press SND to place the call.
3. When the recording prompts you for information, press SND to send the next set of stored numbers.
4. Press SND as many times as necessary to transmit all the numbers.

Getting to Phone Book...

1. **Press** FCN, then press 1 MENU to enter the menu system.
2. **Press** ◀▶ to scroll to **Phone Book,** and press STO to select.
3. **Press** ◀▶ to scroll to the following features, and press STO to select.

Storing and Placing Numbers for Calling Card Information

Storing Calling Card Information

Like Pause Dialing, you can store calling card access numbers, separated by pauses, for recall later. You can also store a Number Character in the sequence to save a place for the number you call when you use your calling card.

See “Using Lock/Security Features” on page 61 for more information on protecting your calling card information.

1. Follow the steps in the ”Getting to Phone Book…” block above to select `Store Number`. You will see `Enter Number`.
2. Enter the phone number you use to access your calling card system. (Skip this step if you only dial 0.)
3. Press FCN 1 MENU. You will see `Insert Pause o`.
4. Press STO to insert a pause (o) into the sequence.
5. Enter the next numbers, if needed. (For example, some long distance carriers require you to dial a 0 first. If no further numbers are needed, skip to step 7.)
6. Press FCN SND.

7. Press ◀▶ to scroll to the Number Character. You will see Insert Number ´N.
8. Press STO to insert the ´N Character.

   This special character saves a place for the phone number you will be calling. The number is inserted automatically when you place the call.
9. Press FCN SND.
10. Press STO to insert another pause, as in steps 3 and 4.
11. Enter your calling card PIN number.
12. Press STO to store your calling card sequence.

    You will see Location —.
13. Enter the two-digit memory location where you want the sequence stored.

    You will see Alpha Or #.
14. Enter a name for your sequence. (See “How to Enter a Name” on page 27 for details on entering names.)
15. Press STO when you are finished entering the name.

    Your phone confirms your entry by displaying the location, number, and name you stored.

Placing a Calling Card Call

To recall your stored calling card information:

1. Recall the calling card information you stored.

   (See “Recalling an Entry by Name”” and “Recalling an Entry by Location” on page 39 for more information on Recalling Numbers.)
2. Press SND before entering the number. You will see Enter Number.

3. Enter the phone number you want to call, including the area code.

   Enter the number manually, by location, or recall.

4. Press SND to place the call.

   Your phone dials the number to access your long distance provider.

5. Press SND to send the next group of numbers when you are prompted.

   The phone automatically inserts the selected number to call at the appropriate time in the sequence.

6. Repeat step 5 to send the next group of numbers as many times as necessary.

Getting to Phone Book...

1. **Press** FCN, then press 1 MENU to enter the menu system.
2. **Press** ◀▶ to scroll to **Phone Book,** and press STO to select.
3. **Press** ◀▶ to scroll to the following features, and press STO to select.

Editing a Memory Location

After you store names and numbers in the Phone Book, you can edit the information or erase entries at any time.

1. Follow the steps in the ”Getting to Phone Book…” block above to select Edit.
2. Recall the entry by location or by name.

   (See “Recalling an Entry by Name” and “Recalling an Entry by Location” on page 39.)
3. Press STO to begin editing the phone number.

   The display shows the name briefly, then the phone number.
4. Press CLR to erase one digit at a time.

   Press and hold CLR to erase the entire number.
5. Enter your changes to the phone number.
6. Press CLR when you finish editing the phone number.

   The display shows the location where your number is currently stored.
7. Press CLR to erase the memory location, then enter a new two-digit location.

   or

Press STO to keep the phone number in its current location.

The display shows the name stored with the phone number you are editing.

8. Enter your changes to the name. (See “How to Enter a Name” on page 27.)

Press CLR to erase one letter at a time, or skip to step 9 to leave the name unchanged.

9. Press STO when you finish editing the name. The display shows the new information.

10. Press STO to save your changes.

Your phone confirms your entry by displaying the location, number, and name you stored.

or

Press CLR to leave the information unchanged.

When you see Location —, enter a new two-digit memory location to avoid overwriting the information in the current location.

11. Press END to exit, or scroll to other features.

Getting to Phone Book...

1. **Press** FCN, then press 1 MENU to enter the menu system.
2. **Press** ◀▶ to scroll to **Phone Book,** and press STO to select.
3. **Press** ◀▶ to scroll to the following features, and press STO to select.

Assigning an Individual Ring Style to a Phone Book Entry

You can use the individual ring style feature to assign one of nine ring styles to alert you of an incoming call from a phone number listed in your phone book.

1. Follow the steps in the ”Getting to Phone Book…” block to select `Individual Ring Style`.
2. Select the phone book entry to which you want to assign an individual ring style.
   - **a.** Enter the first letter of the name entry associated with the phone number.
   - **b.** Scroll up and down to reach the desired phone book entry.
3. When you reach the phone number you want, select it by pressing STO.

   The display will show `Select 0-9, 0=OFF`.
4. Press 0 OPR to assign the default ring style to the number.

   or

   Scroll to the ring style you want to assign to the phone number.

5. Press STO to select that ring style.

   The display confirms the selection by showing Ring Style Assigned.

6. Press END to exit, or scroll to other features.

Timing Your Calls

Road Map for Call Timers

To enter the menu system:

Press FCN 1 MENU.

Start:

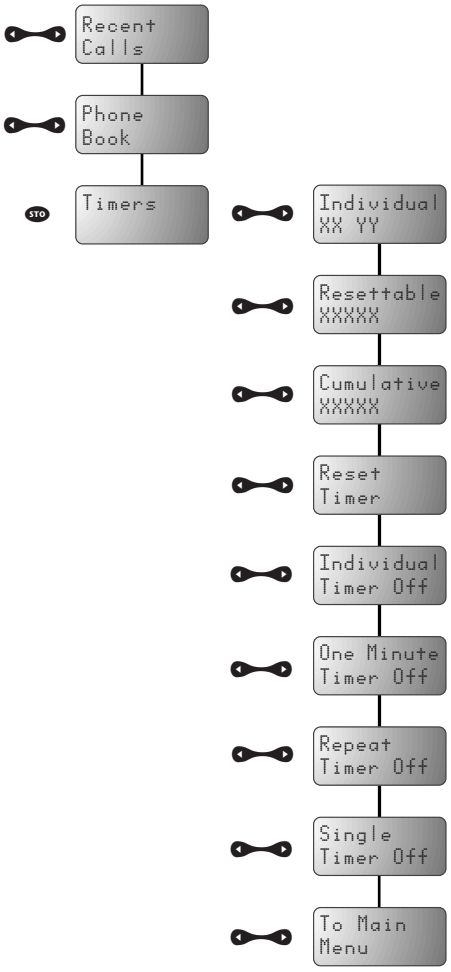

Getting to Call Timers...

1. **Press** FCN, then press 1 MENU to enter the menu system.
2. **Press** ◀▶ to scroll to **Timers** and press STO to select.
3. **Press** ◀▶ to scroll to the following features, and press STO to select.

Viewing the Individual Call Timer

You can view the air-time of the most recent call or the call in progress (in minutes and seconds) at any time using this feature. The Individual Call Timer resets when you place the next call and when you turn the phone off. You can also choose to have the timer display while calls are in progress. See "Displaying the Individual Timer Automatically" on page 53.

1. Follow the steps in the "Getting to Call Timers…" block above to select `Individual XX YY`. The display shows the air-time of your last call in minutes (*XX*) and seconds (*YY*).
2. Press to exit, or scroll to other features.

Shortcut:
Press RCL ◀▶, ◀▶ for a quick look at this timer.

Viewing the Resettable Call Timer

You can track how much air time you have accumulated at any time. Use this feature to view the time elapsed, and follow the instructions in "Resetting the Timer" on page 52 to reset the timer.

1. Follow the steps in the "Getting to Call Timers…" block above to select `Resettable XXXXX`. The display shows your air time in minutes since you last reset the timer.
2. Press END to exit, or scroll to other features.

Shortcut:
Press RCL ◀▶, ◀▶, ◀▶ for a quick look at this timer.

Shortcut: Press RCL, ◀▶, ◀▶, ◀▶, ◀▶ for a quick look at this timer.

Viewing the Cumulative Timer

This is a non-resettable timer that keeps track of your phone's total air time (in minutes).

1. Follow the steps in the "Getting to Call Timers…" block to select `Cumulative XXXXX`. The display shows your air time in minutes since your phone was activated.
2. Press END to exit, or scroll to other features.

Resetting the Timer

By resetting this timer at the beginning of each billing cycle, you can keep a running tab of your monthly usage. After you reset the timer, it continues to keep track of your air time (in minutes) until you reset it again.

1. Follow the steps in the "Getting to Call Timers…" block to select `Individual XX YY`.
2. Press ◀▶ to scroll to `Reset Timer`.
3. Press STO to reset the timer.
4. Press END to exit, or scroll to other features.

Note: The shortcuts do not work if the Reset Timer is already set at zero.

Getting to Call Timers...

1. **Press** FCN, then press 1 MENU to enter the menu system.
2. **Press** ◀▶ to scroll to **Timers** and press STO to select.
3. **Press** ◀▶ to scroll to the following features, and press STO to select.

Displaying the Individual Timer Automatically

When you turn this feature on, your phone automatically displays your air time in minutes (*XX*) and seconds (*YY*) during and after each call.

1. Follow the steps in the "Getting to Call Timers…" block to select `Individual Timer`. You will see `Individual Timer Off` or `Individual Timer On`.
2. Press STO to toggle between `Individual Timer Off` and `Individual Timer On`.
3. Press END to exit, or scroll to other features.

Setting the One-Minute Audible Timer

Activate this feature to hear an audible beep 10 seconds before the end of every minute during a call. The party on the other end does not hear the beeps.

1. Follow the steps in the "Getting to Call Timers…" block to select `One Minute Timer`. You will see `One Minute Timer Off` or `One Minute Timer On`.
2. Press STO to toggle between `One Minute Timer Off` and `One Minute Timer On`.
3. Press END to exit, or scroll to other features.

Tip:
Activating the Individual Timer may reduce both standby and talk times.

Setting the Repeating Audible Timer

You can set this timer to beep during your calls at an interval that you select—from 11-999 seconds. You will hear the beep 10 seconds before the end of each interval, but the party on the other end does not hear the beeps.

1. Follow the steps in the ”Getting to Call Timers…” block to select Repeat Timer. You will see Repeat Timer Off or Repeat Timer On.
2. Press STO to toggle between Repeat Timer Off and Repeat Timer On.

   The prompt to enter seconds appears **only** if you have turned the feature on. If you have turned it off, you will see Repeat Timer Off.
3. Enter the number of seconds you would like between audible beeps. You will see Beep At YYY Secs.
4. Press STO to set the timer. The phone confirms the setting by displaying Set At YYY Secs.
5. Press END to exit, or scroll to other features.

Setting the Single Timer

Like the Repeating Timer, you can set the Single Timer to beep at a time that you select—from 11-999 seconds. It beeps once during each call, 10 seconds before the end of the interval. The party on the other end does not hear the beeps.

1. Follow the steps in the ”Getting to Call Timers…” block to select Single Timer. You will see Single Timer Off or Single Timer On.

2. Press STO to toggle between Single Timer Off and Single Timer On.

   The prompt to enter seconds appears **only** if you have turned the feature on. If you have turned it on, you will see Single Timer Off.

3. Enter the number of seconds you would like between audible beeps. You will see Beep At YYY Secs.

4. Press STO to set the timer. The phone confirms the setting by displaying Set At YYY Secs.

5. Press END to exit, or scroll to other features.

Adjusting Tone Controls

Road Map for Tone Controls

To enter the menu system:

Press FCN 1 MENU.

Start:

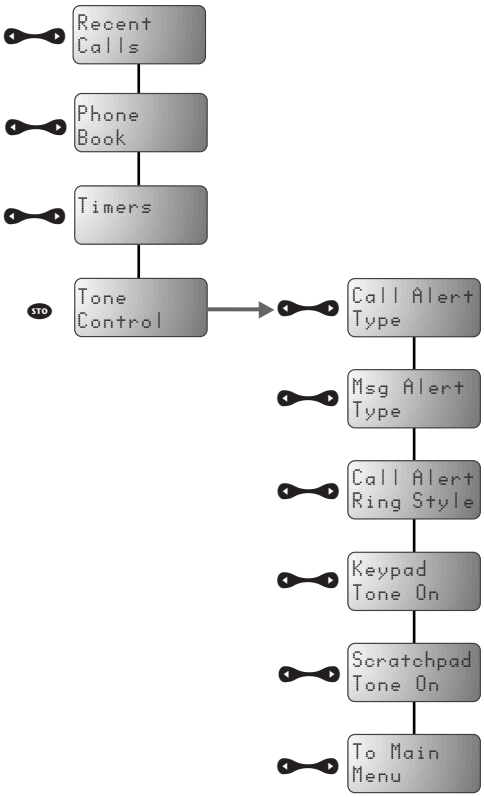

Getting to Tone Controls...

1. **Press** FCN, then press 1 MENU to enter the menu system.
2. **Press** ◀▶ to scroll to **Tone Control** and press STO to select.
3. **Press** ◀▶ to scroll to the following features, and press STO to select.

Selecting Call Alert Type

Using this feature, you can choose to be alerted to incoming calls using the the ringer, both, or to not be alerted. Ringer On is the default.

Note: Although you set your call alert type below, the selection is temporarily suppressed if Pager Mode is enabled. See “Activating Pager Mode” on page 73 for details.

1. Follow the steps in the ”Getting to Tone Controls…” block above to select Call Alert Type.The display shows your current alert type setting.
2. Press ◀▶ to scroll through your choices: Ringer On and Ringer Off.
3. Press STO when you reach the setting you want.

   Note: When Pager Mode is active, this menu is not displayed.
4. Press END to exit, or scroll to other features.

Selecting Message Alert Type

Using this feature, you can choose whether or not you want to receive a beeping alert to incoming voice mails and short messages.

The beep tones differ depending on whether the incoming message is marked urgent or normal. You will receive one beep for a normal message and three beeps for an urgent message.

1. Follow the steps in the ”Getting to Tone Controls…” block to select `Message Alert Type`.
2. Press ◀▶ to scroll through your choices: `Beep` or `Beep Off`. `Beep` is the default setting.
3. Press STO when you reach the setting you want.
4. Press END to exit, or scroll to other features.

Getting to Tone Controls...

1. **Press** FCN, then press 1 MENU to enter the menu system.
2. **Press** ◀▶ to scroll to **Tone Control** and press STO to select.
3. **Press** ◀▶ to scroll to the following features, and press STO to select.

Selecting a Ring Style

Your phone lets you select any of nine different ring styles. After you choose a style, the phone give you a brief sample of the new ring style.

1. Follow the steps in the ”Getting to Tone Controls…” block to select `Call Alert Ring Style`.
2. Press 1 MENU through 9 WXYZ to hear the different ring styles, or scroll through the ring styles. `Ring Style 1` is the default setting.
3. Press STO when you reach the ring style you want.

   The display will show `Ring Style X Set`.
4. Press END to exit, or scroll to other features.

Turning Keypad Tones On and Off

Keypad tones are the sounds you hear when you press any key on the phone. By default, keypad tones are turned on. If you want to be discreet, use this feature to silence the audio feedback from the keypad.

Note: The other party still hears tones.

1. Follow the steps in the ”Getting to Tone Controls…” block to select Keypad Tone. You will see Keypad Tone On or Keypad Tone Off.
2. Press STO to toggle between Keypad Tone On and Keypad Tone Off.
3. Press END to exit, or scroll to other features.

Turning Scratchpad Tones On and Off

Scratchpad tones are the tones that your phone sends to access automated calling systems like Voice Mail. By default, scratchpad tones are turned on. If you don’t want your party to hear these sounds when you use the scratchpad, turn the scratchpad tones off.

1. Follow the steps in the ”Getting to Tone Controls…” block to select Scratchpad Tone. You will see Scratchpad Tone On or Scratchpad Tone Off.
2. Press STO to toggle between Scratchpad Tone On and Scratchpad Tone Off.
3. Press END to exit, or scroll to other features.

Note: If you turned the scratchpad tones off but want to access a tone-activated system like Voice Mail, place the call, enter the numbers you need to transmit, then:

Press RCL SND to send the tones.

Using Lock/Security Features

Road Map for Lock Security

To enter the menu system:

Press FCN 1 MENU.

Start:

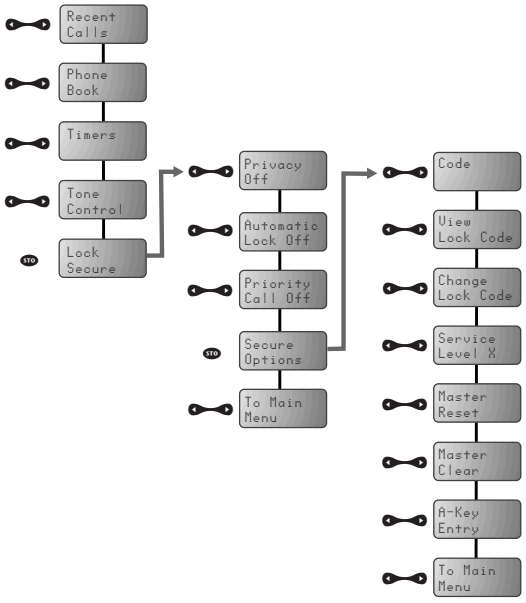

Getting to Lock Security...

1. **Press** FCN, then press 1 MENU to enter the menu system.
2. **Press** ◀▶ to scroll to **Lock Secure** and press STO to select.
3. **Press** ◀▶ to scroll to the following features, and press STO to select.

Activating Voice Privacy

When you activate your phone's Voice Privacy feature, you request your cellular system to search for a Voice Privacy channel with each call. If no Voice Privacy channel is available (or your call is "handed off" to a cell where a Voice Privacy channel is not available), five short beeps alert you that the call is no longer private.

You must select the Voice Privacy feature before you make a call in order for that call to search for a Voice Privacy channel.

Note: This feature is not available in all markets. Contact your Service Provider for additional information about your service area.

To turn the Voice Privacy feature on or off:

1. Follow the steps in the "Getting to Lock/ Security…" block above to select `Voice Privacy`. You will see `Privacy Off` or `Privacy Preferred`.
2. Press STO to toggle between `Privacy Off` and `Privacy Preferred`.
3. Press END to exit, or scroll to other features.

Locking/Unlocking Your Phone

Locking Your Phone Automatically

When you turn this feature on, your phone automatically locks itself each time you turn it off.

1. Follow the steps in the "Getting to Lock/ Security…" block to select Automatic Lock. You will see Automatic Lock Off or Automatic Lock On.
2. Press STO to toggle between Automatic Lock Off and Automatic Lock On.
3. Press END to exit, or scroll to other features.

Shortcut: Press FCN, STO, 1 MENU, 5 LOCK JKL, and continue with step 2.

Locking Your Phone Manually

You can lock your phone manually at any time to prevent unwanted use. Once you lock the phone, it remains locked whether it is powered on or off.

1. Press FCN.
2. Press and hold 5 LOCK JKL for at least one full second.You will see Lock?.
3. Press STO to lock. You will see Locked.

Tip: *"LOCK" is printed on the 5 LOCK JKL key, as a reminder.*

Unlocking Your Phone

To unlock your phone:

Once your phone is on, **enter your three-digit lock code** to unlock your phone. (See "Viewing the Lock Code" on page 65 and "Changing the Lock Code" on page 65 for more information on your lock code.)

Tip: *If you forget your lock code, try pressing 1 2 3 or the last three digits of your cellular phone number.*

Answering Calls While the Phone Is Locked

You can still receive calls when the phone is locked. To answer an incoming call:

1. Enter your three-digit lock code.
2. Press SND to receive the call.

Activating Priority Calling

Priority Call allows the Turbo Dial™ function to dial from memory location 01—even when the phone is locked. You can store an emergency number or the number of someone you would like to contact in case of emergency.

Note: Some cellular systems have their own emergency numbers and deny access to other emergency numbers. Check with your Service Provider for more information.

Shortcut: Press FCN, STO, 2 9, and continue with step 2.

By default, Priority Call is activated. To turn it off or to switch it back on, complete the following steps:

1. Follow the steps in the ”Getting to Lock/ Security…” block on the previous page to select `Priority Call`. You will see `Priority Call Off` or `Priority Call On`.
2. Press STO to toggle between `Priority Call Off` and `Priority Call On`.
3. Press END to exit, or scroll to other features.

Getting to Security Options...

1. **Press** FCN, then press 1 MENU to enter the menu system.
2. **Press** ◀▶ to scroll to **Lock Secure** and press STO to select.
3. **Press** ◀▶ to scroll to the **Secure Options** submenu, and press STO to select.
4. **Enter** your **six-digit security code**, scroll to the following features, and press STO to select.

Managing Security Options

For your protection, you must enter the six-digit security code to access the features that your phone contains. The factory-programmed lock code for unlocking the phone is 123. The six-digit security code is 000000. These may have been changed when your phone was activated.

Viewing the Lock Code

To display the active three-digit lock code:

1. Follow the steps in the "Getting to Security Options…" block above to select View Lock Code.
2. Press STO to display your three-digit lock code. The code appears for a few seconds.
3. Press END to exit, or scroll to other features.

Shortcut: Press FCN, STO, 5 LOCK JKL 5 LOCK JKL, and continue with step 2.

Changing the Lock Code

To change your three-digit lock code:

1. Follow the steps in the "Getting to Security Options…" block above to select Change Lock Code. You will see Enter Code ——.
2. Enter the new three-digit code. You will see Changed To XXX.

3. Press END to exit, or scroll to other features.

Note: If you try to change your lock code to 911 or the first three digits of an emergency number, you will see Code Invalid, and the code you entered **will not** be accepted. You will return to step 1 above.

Restricting Call Placement

You may want to restrict call placement or hide memory information when loaning your phone to others.

Selecting a Service Level

1. Follow the steps in the ”Getting to Security Options…” block to select Service Level. The phone displays your current service level. Refer to the chart on the next page.
2. Press ◀▶ to scroll through the service level settings, and press STO to select the service level you want.

   If you select Level 7, the phone prompts you for the range of memory locations you want to remain active. You will see Range 1--—.

   Enter the range of digits memory locations from which calls are allowed. The phone confirms the allowed range, and you will see 1-XX Allowed.
3. Press END to exit, or scroll to other features.

Service Level Settings

Each of your phone's eight service levels offers a different combination of access privileges and restriction.

Note: Caller Line ID is an optional network and subscription feature that is not available in all areas.

Level	Description	Display
1	• Calls can be placed from memory locations 1-10 only. • No dialing from keypad • No memory edit or storage • No access to name directory • No access to last number dialed	1 Memory 1-10
2	• Calls can be placed from all memory locations. • No dialing from keypad • No memory edit or storage • No access to Caller Line ID stack or Last Number Dialed	2 Memory Only
3	• Calls can be placed manually from the keypad only. • No access to memory information • No memory edit or storage • No access to Caller Line ID stack or Last Number Dialed	3 Keypad Only
4	Standard setting, no restrictions	4 Standard Setting
5	Seven-digit (local) dialing only	5 Local Only

Level	Description	Display
6	• Calls can be placed from the keypad and from memory. • No edit or memory storage to memory locations 1-10 • Memory cannot be changed.	6 No Store 1-10
7	• Calls can be placed from a selected memory range only. • Memory edit and storage allowed with the selected range. • No access to name directory	7 Allow Range
8	No edit, storage, or recall from memory locations 1-10	8 Hide Turbo

Getting to Security Options...

1. **Press** FCN, then press 1 MENU to enter the menu system.
2. **Press** ◀▶ to scroll to **Lock Secure** and press STO to select.
3. **Press** ◀▶ to scroll to the **Secure Options** submenu, and press STO to select.
4. **Enter** your **six-digit security code**, scroll to the following features, and press STO to select.

Resetting All Options

Use the Master Reset feature to reset all user-selectable options back to their original factory settings.

Note: Once you select this feature, the reset process cannot be canceled or reversed.

1. Follow the steps in the "Getting to Security Options…" block above to select Master Reset.
2. Press if you want to reset all your phone's options back to their factory settings. You will see Standard Setting.

   or

   Press END to exit the menu if you do not want to reset your phone's options.
3. Press END to exit, or scroll to other features.

Clearing All Stored Information

If you want to start over, use Master Clear to reset all user-selectable options, clear the resettable timer, and erase all Phone Book information.

Shortcut: Press FCN, 1 MENU, 5 LOCK JKL 2 ABC, and continue with step 2.

Note: Once you select this feature, the process cannot be canceled or reversed.

1. Follow the steps in the "Getting to Security Options…" block to select Master Clear.
2. Press STO to clear the memory and reset all your phone's options back to their factory settings. You will see Busy. (This takes a few seconds.)

   or

   Press END to exit the menu if you do not want to reset your phone's options.
3. Press END to exit, or scroll to other features.

Authenticating Users

Your phone is equipped with an authentication feature called the A-Key, which acts like a PIN number and helps prevent unauthorized use of your phone. Contact your Service Provider for your personalized A-Key number.

Note: This feature should only be programmed once.

1. Follow the steps in the "Getting to Security Options…" block to select A-Key Entry. The display shows the phone's active phone number.

   If the number displayed is not the number you want for the A-Key, press ◄► to switch to the second programmed number. Your phone uses this number once you exit this feature.

2. Press STO to select.

   Enter the 6- to 26-digit A-Key number as supplied by your Service Provider. Press CLR to correct errors.

3. Press STO to validate the A-Key entry.

   - If you enter the A-Key correctly, you will see `Valid`.
   - If you enter the A-key input incorrectly, you will see `Invalid`. Re-enter your A-Key.

Press END to exit, or scroll to other features.

Customizing Phone Options

Road Map for Phone Options

To enter the menu system:

Press FCN 1 MENU.

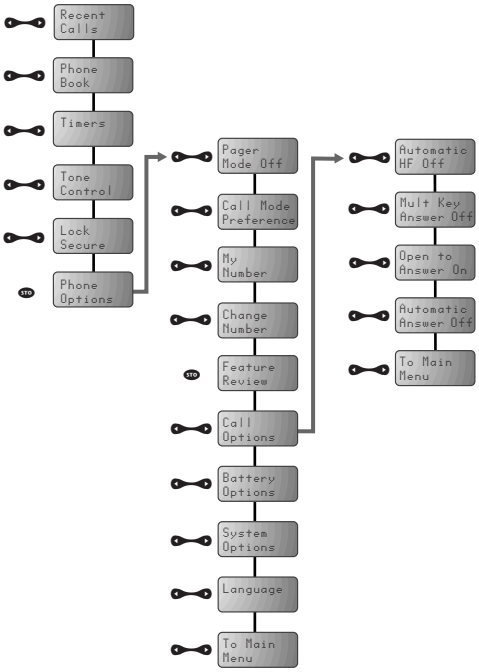

Getting to Phone Options...

1. **Press** FCN, then press 1 MENU to enter the menu system.
2. **Press** ◀▶ to scroll to **Phone Options** and press STO to select.
3. **Press** ◀▶ to scroll to the following features.

Activating Pager Mode

When Pager Mode is activated, the phone simulates a pager. Pager Mode suppresses incoming call alerts but leaves message alerts active. The following conditions occur:

- Voice call alerts are suppressed.
- Message alerts are allowed.
- The Call Alert Type feature cannot be changed. If you attempt to change this feature, the display will show `Pager Mode Active`.

By default, Pager Mode is turned off. Complete the following steps to turn Pager Mode on and off.

1. Follow the steps in the "Getting to Phone Options…" block to select `Pager Mode ON/OFF`. The display shows your current Pager Mode setting.
2. Press STO to toggle between Pager Mode on and off.
3. Press END to exit, or scroll to other features.

Tip: *When Pager Mode is active,* FCN 8 TUV *only toggles the Message Alert Type settings. Pager Mode has no effect on the Call Alert Type settings.*

Selecting Call Mode Preference

Either a digital or analog channel can be assigned to your phone, based upon system channel availability.

Examples of peripheral devices that require analog operation include fax machines, personal computers with modems, and telemetry monitors (EKG). You must select this feature before a call originates in order for the call to be analog.

Tip: *If this feature is selected during a call, the feature is effective with the next call. Press FCN 2 ABC to switch between digital and analog mode.*

Note: When powered on, your cellular phone first searches for a digital channel. If no digital channel is available, your phone switches to an analog channel.

1. Follow the steps in the ”Getting to Phone Options…” block to select `Call Mode Preference`.
2. Press ◀▶ to toggle among `Digital preferred`, `Analog only`, or `Digital only` modes.
3. Press STO to make your selection.
4. Press END to exit, or scroll to other features.

Note: `Analog only` is a temporary setting that is only active for a single call or until you turn the phone off and back on.

Warning: If you select either Analog Only or Digital Only, you will not be able to make a call if the selected system is not available.

Viewing Your Own Number

Use this feature to view your phone's currently active phone number. If you have more than one phone number, you can change the active number with the Change Number feature in the Phone Options menu. (See "Switching Between Numbers" on page 76.)

1. Follow the steps in the "Getting to Phone Book…" block above to select My Number.
2. Press STO to view your own phone number.

   Your active phone number appears on the screen. After six seconds, the phone returns to step 1.
3. Press END to exit, or scroll to other features.

Shortcut: Press RCL ◀▶ for a quick look at your phone number.

Getting to Phone Options...

1. **Press** FCN, then press 1 MENU to enter the menu system.
2. **Press** ◀▶ to scroll to **Phone Options** and press STO to select.
3. **Press** ◀▶ to scroll to the following features.

Switching Between Numbers

Your phone can operate on two different home systems. If you travel often, you can have your phone programmed with two cellular numbers to reduce roaming. This feature allows you to change your active number to the one appropriate for the area you are in.

When your phone has two numbers, both are designated as your home system but only one number can be active at any given time. Calls are placed and received by the currently active number only. Each time you turn your phone ON, you'll see a message in the display that indicates which phone number and home system are currently active:

Non-wireline type with phone number 1	A1
Non-wireline type with phone number 2	A2
Wireline with phone number 1	B1
Wireline with phone number 2	B2

In most areas, there are two competing cellular carriers, the *wireline* carrier and the *non-wireline* carrier. Your display indicates which type of carrier your home system is as follows:

non-wireline carrier—The display indicates that your home system is system A.

wireline carrier—The display indicates that your home system is system B.

To switch your phone number:

1. Follow the steps in the ”Getting to Phone Options…” block to select Change Number. The active phone number appears in the display (for example, 5155551515).
2. Press ◄► to switch to your other phone number (for example, 7085551212).
3. Press STO to confirm the new setting.
4. Press END to exit, or scroll to other features.

Selecting a Cellular System

Shortcut 1: Press RCL ◀▶, and continue with step 3.

Shortcut 2: Press FCN, STO, 2 ABC 3 DEF, and continue with step 2.

Your Service Provider configures the System Mode feature when you receive a cellular phone number. Use this feature to select the type of cellular system your phone will access.

1. Follow the steps in the "Getting to Phone Options…" block to select System Mode.
2. Press ◀▶ to scroll through the mode settings:

Standard Mode—Your phone first seeks a home type system, then a non-home type system	
If home is non-wireline (type A)	Std AB
If home is wireline (type B)	Std BA
Reversed Preference Mode—Your phone first seeks a non-home type system, then a home type system. (May be useful in fringe areas or certain roaming situations)	
If home is non-wireline (type A)	Scan BA
If home is wireline (type B)	Scan AB
Home Only Mode—The phone will not operate outside its home system.	Home
Scan A Mode—The phone will operate only within nonwireline (type A) systems.	Scan A
Scan B Mode—The phone will operate only within wireline (type B) systems.	Scan B

3. Press STO to select the system mode setting you want.
4. Press END to exit, or scroll to other features.

Reviewing Feature Settings

Use this feature to review the changes you've made to feature settings.

Note: While scrolling through Feature Review, you can only review settings. You cannot change them.

1. Follow the steps in the "Getting to Phone Options…" block to select Feature Review. The display message indicates whether the phone is accessing a Digital, Analog, or Control Channel:

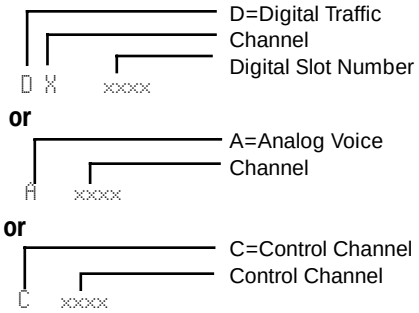

Note: The D icon is displayed when on a digital control channel. The A icon is displayed when on an analog control channel.

2. Press ◀▶ to scroll through features you changed from their default settings.

   If all of the features are set to the factory standard settings, the display shows Standard Setting.

3. Press END to exit the menu.

Phone Options

Getting to Call Options...

1. **Press** FCN, then press 1 MENU to enter the menu system.
2. **Press** ◀▶ to scroll to **Phone Options** and press STO to select.
3. **Press** ◀▶ to scroll to the **Call Options** submenu, and press STO to select.
4. **Press** ◀▶ to scroll to the following features.

Activating Automatic Hands-Free

Turn this feature on when you are using Hands-Free vehicular accessories.

Note: The use of wireless telephones and their accessories (devices) may be prohibited or restricted in certain areas. Always obey the laws and regulations on the use of these devices.

To find out more about accessories for your car, refer to “Accessory Options” on page 93.

1. Follow the steps in the ”Getting to Call Options…” block to scroll to Automatic HF. You will see Automatic HF On or Automatic HF Off.
2. Press STO to toggle between Automatic HF On and Automatic HF Off.
3. Press END to exit, or scroll to other features.

Activating Multiple Key Answer

Turn on the Multiple Key Answer feature to answer calls by pressing any key on the upper keypad 1 — 9 or ◄ ►.

1. Follow the steps in the "Getting to Call Options…" block to scroll to Mult Key Answer. You will see Mult Key Answer On or Mult Key Answer Off.
2. Press STO to toggle between Mult Key Answer On and Mult Key Answer Off.
3. Press END to exit, or scroll to other features.

Activating Automatic Answer

Turn Auto Answer on to have your phone automatically answer incoming calls after two rings.

1. Follow the steps in the "Getting to Call Options…" block to scroll to Automatic Answer. You will see Automatic Answer On or Automatic Answer Off.
2. Press STO to toggle between Automatic Answer On and Automatic Answer Off.
3. Press END to exit, or scroll to other features.

Tip: *If the ringer is off, the phone answers without ringing.*

Getting to Phone Options...

1. **Press** FCN, then press 1 MENU to enter the menu system.
2. **Press** ◀▶ to scroll to **Phone Options** and press STO to select.
3. **Press** ◀▶ to scroll to the following features.

Selecting Battery Options—Power Save Mode

This feature enables you to turn off the Power/Status Indicator. Turn this mode on to increase talk or standby times.

Note: Display and keypad backlighting is turned off when Power Save Mode is turned on.

1. Follow the steps in the ”Getting to Phone Options…” block to select the `Battery Options` sub-menu. You will see `Power Save Mode On` or `Power Save Mode Off`.
2. Press STO to toggle between `Power Save Mode On` and `Power Save Mode Off`.
3. Press END to exit, or scroll to other features.

Displaying System Identification

This feature shows the System ID number that identifies the cellular system your phone is currently accessing. An even number indicates a wireline system, while an odd number indicates a non-wireline system.

1. Follow the steps in the ”Getting to Phone Options…” block to enter the `System Options` sub-menu. You will see `Display SID`.

2. Press STO to view the System ID number. After six seconds, the phone goes back to step 2.
3. Press END to exit, or scroll to other features.

Selecting Language

This feature enables you to select the language in which your phone displays prompts and messages.

1. Follow the steps in the ”Getting to Phone Options…” block on the previous page to select the Language sub-menu.
2. Press ◀▶ to scroll through the language options. The choices include English, Spanish, French, Portuguese, Hebrew, and Russian.
3. Press STO to select the language setting you want.
4. Press END to exit, or scroll to other features.

Using Voice Mail and Text Messages

Road Map for Message Center

Start:

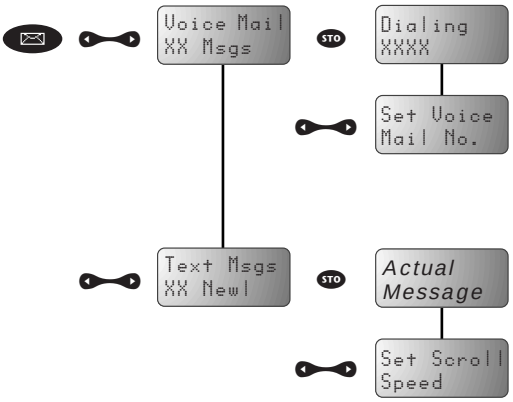

Getting to Voice Mail

1. **Press** to enter the message center.
2. **Press** to scroll to **Voice Mail.**

Voice Mail Alerts

This feature updates you each time a message is sent to your voice mail number, providing you with real-time information on messages waiting to be retrieved.

When a voice mail message is received:

- Voice Mail XX messages appears.
- The icon appears.
- The phone beeps or vibrates one time for a regular message or three times for an urgent message.

Dialing Voice Mail

You can retrieve your voice mail messages in one of two ways.

From the Voice Mail Alert Screen

1. When you receive a voice mail alert and the Voice Mail XX message appears, press SND to dial your voice mail number.

   Your access number for the voice mail center is dialed automatically, and Dialing XXXX appears on the display, where XXXX is your access number.

2. Press END to exit, or scroll to other features.

From the Message Center

1. Follow the steps in the ”Getting to Voice Mail…” block and press SND to dial your voice mail number.

   Your access number for the voice mail center is dialed automatically, and Dialing XXXX appears on the display, where XXXX is your access number.

2. Press END to exit, or scroll to other features.

Editing the Voice Mail Number

This feature allows you to save your voice mail access number.

1. Follow the steps in the ”Getting to Voice Mail…” block.
2. Press STO to select Set Voice Mail No.
3. Enter your voice mail number.

   The digits appear as you enter them.

4. Press STO.

   A message confirms that your number has been saved.

   Note: If you subscribe to a system that provides a shortcut number for voice mail, enter the complete number—not the shortcut number.

5. Press END to exit, or scroll to other features.

Getting to Text Messages

1. **Press** to enter the message center.
2. **Press** to scroll to **Text Msgs.**

Reading Text Messages

Some Service Providers let you subscribe to a Short Message Service (SMS), which allows you to receive alphanumeric messages on your phone, just like a pager. Contact your Service Provider for information about the availability of messaging in your area.

SMS enables your phone to save up to 15 short messages, each up to 80 characters in length, or five full-length 239-character messages.

Your phone automatically replaces the oldest messages with the newest as they are received. You can store Call Back messages and numbers for later review. The one-touch Message Button makes viewing your messages easy.

How Your Phone Receives Message Alerts

New Message Alerts

If your phone is on and receives a new digital message, the phone alerts you in two different ways:

- Message Received appears in the display, and:
  - The message icon appears.
  - The phone beeps three times.

  or

- Urgent Msg Received or EMERGENCY MSG RECVD appears in the display, and:
  - The message icon appears.
  - The phone beeps five times.

Short Message Indicators

If the sender has marked the message "Emergency" or "Urgent," the display shows Call Home Urgent or Call Home Emergency. The message number appears in the upper right of the display.

Selecting and Reading Short Messages

1. Follow the steps in "Getting to Text Messages…."
   - If the message center has messages, you will see Text Msgs XX New, where *XX* is the number of unread messages.

     The total number of messages stored, *YY* appears in the upper right of the display.
   - If the message center has no messages, you will see Text Msgs Empty, and 00 will appear in the upper right portion of the display.
   - If the message center is full, Msg Memory Full is displayed for two seconds prior to message headers.
2. Now you can scroll through a list of message headers. Each header includes:
   - the message number
   - its urgency
   - the beginning of the message text

   Press to scroll forward or backward through the list of message headers. The newest message is placed at the top of the list, and the oldest message is at the bottom.

3. Press STO to select and view a message. First, the time and date stamp is displayed for two seconds, and then the message text appears, starting on the top line.

   Press STO to halt the display of the message text. Press STO again to restart it.

4. After reading a selected message, press ◄► to return to the list of message headers.

5. Press END or press and hold ✉ to exit, or scroll to other features.

Initiating a Call Back

When the current message has scrolled across the display, you can call back a number embedded in the text message.

1. Press and hold STO, or press SND to initiate a Call Back, if a Call Back number was included in the message.

   You will see `Dial No.? XXXXXXX`.

   If a Call Back number was not included in the text message, the phone dials the first number present in the text message.

2. Press STO, or press SND to dial the number shown.

   or

   Press ◄► to search the text message for the next call back number.

Note: While in the message center, you can enter a Call Back number at any time by using the keypad, and then pressing SND to place the call.

Locking and Unlocking a Message

You can lock important messages to ensure their safekeeping for later review. A locked message cannot be deleted until the message is unlocked.

Press FCN 5 to toggle the current message between locked and unlocked.

`Msg Locked` is displayed when a message is locked.

Note: If your message memory is full and a new message is received, any unlocked messages that have been read are deleted.

Clearing Messages

Clearing the Current Message

1. Press CLR when the message you want to erase is on the display.

   You will see `Clear Message?`, where *XX* is the number of the message you will clear. This number will appear in the upper right portion of the display.

2. Press STO to clear the message.

   You will see `Message Cleared`.

   or

   Press END or any other key if you do not wish to clear the message.

Note: You must unlock a locked message before you can clear it. For more information, see “Locking and Unlocking a Message” on page 90.

Clearing All Messages

To erase all the messages from your Message Center at once:

1. Press and hold CLR when you are in the message center.

   You will see Clear All?.

2. Press STO to verify that you want all the messages cleared.

   or

   Press END if you decide not to clear all the messages. You are returned to the message center.

3. Press END to exit from the message center.

   If all messages have been cleared and no locked messages remain in the message center, Msg Center Empty appears in the display.

Note: You must unlock any locked messages before they can be cleared. For more information, see “Locking and Unlocking a Message” on page 90.

Getting to Text Messages...

1. **Press** to enter the message center.
2. **Press** to scroll to **Text Msgs**.

Setting the Scrolling Speed

To adjust the scrolling speed of your incoming messages:

1. Follow the steps in the ”Getting to Text Messages…” block.
2. Press STO to select the `Set Scroll Speed` option.
3. Press to scroll through scrolling speed settings:
   - To scroll slowly, select `Slow Scrolling`.
   - For medium scrolling, select `Medium Scrolling`.
   - To scroll quickly, select `Fast Scrolling`.
4. Press STO to select a scrolling speed.
5. Press END to exit, or scroll to other features.

Reference Information

Accessory Options

An exciting line of Motorola accessories, now smaller and lighter than ever, can enhance and personalize your cellular experience.

Batteries

Your phone uses Nickel Metal Hydride (NiMH) batteries in either AAAL or AA sizes.

.

Cigarette Lighter Adapter

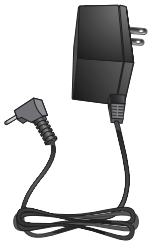

With the cigarette lighter adapter, you can power your phone and charge your phone's battery directly from your vehicle's cigarette lighter! In some cars, the engine must be running in order for the cigarette lighter to operate.

Headset

The convenient headset provides both an earphone and microphone in one small piece for simple hands-free and private telephone conversations. The headset plugs directly into the jack on the side of your phone, so that you can wear your phone and move freely. Place the foam cover on the earpiece for a more comfortable fit.

PCMCIA Modems

These compact modems are made for mobility, with cable attachments that plug directly into the bottom of your phone. They support fax, e-mail and data transmission. The PCMCIA modem works with data devices using a standard PCMCIA Type II slot.

Easy-Install Hands-Free Vehicle Kit

The optional Hands-Free Kit gives you the convenience of hands-free, speaker phone operation while in your car. Full duplex operation lets you simultaneously talk and listen, so both parties can interrupt each other for a normal sounding conversation.

The Hands-Free Kit automatically powers your phone and charges its battery (even when your car's engine is turned off).

Note: The use of wireless telephones and their accessories (devices) may be prohibited or restricted in certain areas. Always obey the laws and regulations on the use of these devices.

Accessory Limited Warranty Information

We recommend that you use Motorola original batteries and accessories. Under its limited cellular telephone warranty, Motorola specifically disclaims any responsibility for damage caused by the use of portable cellular telephone accessories not manufactured by Motorola.

For details on the complete line of Motorola cellular accessories, see your dealer or visit our Web site at `http://www.mot.com/`.

Troubleshooting

Question	Answer
I pressed the power button, but nothing happened. What's wrong with my phone?	Make sure that you press and hold the power button until the display appears and you hear an audible alert. If nothing still happens, then check that you have installed a battery and that the battery is charged. For more information about batteries and charging see the sections on batteries starting with "Installing and Removing Batteries" on page 14.
My battery didn't last as long as I expected. What can I do to extend battery life?	Your battery's "talk-time" and "standby-time" are relative measurements of the battery's capacity. The more you talk on the phone, the less standby-time you have, and vice versa. To get the most from your battery, allow it to charge fully. To charge the battery to 100% of its capacity, leave it in the charger for an extra hour after the charger's light turns green. You can also turn on the Power Save Mode feature to extend battery life. However, the LED Power/Status Indicator does not light when this feature is activated. Certain features demand power from your battery and reduce battery life. If you have selected the Automatic Display of Individual Call Timer feature, the display uses battery power to remain active during each call. Turn this feature off to conserve battery energy. (See "Displaying the Individual Timer Automatically" on page 53 for more information on this feature.) Make sure that you are using batteries that are compatible with your phone. Exposing your battery to extreme temperatures—below -10°C (14°F) or above 45°C (113°F)—can shorten battery life. Batteries are especially sensitive to high temperature extremes. As a good rule, always take your phone with you when you leave your car.
The display says, "Locked." How do I unlock my phone?	Enter the last three digits of your cellular number. If that doesn't work, use the factory preset lock code: 123. If all else fails, call your service provider (the company that sends you your monthly cellular bill) for assistance. (See "Locking/Unlocking Your Phone" on page 63 for more information on Security Features.)

Question	Answer
I tried to place a call and received a fast busy signal.	This sound means that the cellular system did not process your call. For example, the cellular system may be overloaded with call attempts. To redial the number, press SND before ending your call attempt, or press END and try the call again later. (See "Redialing a Number" on page 23 for more information on redialing.)
I tried to place a call and received an alternating high/low tone.	This sound means your call did not reach the cellular system. You may have dialed the number too soon after turning the phone on. Wait until the No Service message is no longer displayed before placing a call. An alternating tone may also indicate that your phone's signal is blocked. Make sure the antenna is fully extended and you're clear of any obstructions such as bridges, parking garages, or tall buildings.
I am in my home service area, but the Roam indicator is flashing.	If your phone is programmed with more than one telephone number, you might not have switched to the number appropriate for your current location. Press RCL ◀▶ STO to switch to the other number. See "Switching Between Numbers" on page 76 for more information on multiple phone numbers.
I tried to listen to my Voice Mail (or use a paging service, a calling card, etc.) but nothing happened.	You have probably turned off the Scratchpad tones. Place your call, enter the access numbers when prompted by the recording, then press RCL SND. To avoid this problem in the future, follow the directions "Turning Scratchpad Tones On and Off" on page 60 to turn the Scratchpad tones on.
What if my phone beeps several times after power up?	The phone is programmed for Call ReceiveOff. See "Activating Automatic Hands-Free" on page 80 for information.
My phone was stolen. What should I report and to whom?	Report a stolen phone to the police and to your service provider (the company that sends you your monthly cellular service bills).

Question	Answer
I tried to place a calling card call using the internal Phone Book, but it didn't work.	You may have turned off your Scratchpad tones. Follow the directions in "Turning Scratchpad Tones On and Off" on page 60 to turn the Scratchpad tones on. Check that you stored your calling card information in the correct order, and make sure the groups of numbers are separated by pauses. The easiest way to correct the sequence may be to start from scratch. Follow the instructions on "Storing Calling Card Information" on page 43, enter your calling card information again, and store it in the same memory location as your previous attempt. Also keep in mind that when using your calling card, you must enter the number you are calling with the area code, but without the initial "1." Check with your long distance carrier for details on using your calling card.

Glossary

A

AC adapter An accessory device that allows you to power your phone and charge any attached batteries from a wall outlet.

AMPS (Advanced Mobile Phone System) A cellular technology that operates on 832 channels.

accessory connector port A socket on the bottom of the phone where you can attach accessories such as an AC adapter, battery charger, cigarette lighter adapter, or data accessories.

air-time The amount of time you spend using a cellular system. Especially, the time between successfully placing a call and terminating a call.

antenna The device attached to your phone that sends and receives cellular signals.

Auto Answer When you activate this feature, your phone automatically answers after two rings. See “Activating Automatic Answer” on page 81.

Automatic Redial When your cellular network cannot handle your call, this feature enables your phone to automatically redial for the next four minutes. See “Redialing a Number” on page 23.

C

Caller Line ID A network/subscription dependent service that allows you to view information on incoming calls before answering. Not available in all areas.

cellular carrier One of multiple competing organizations in a given geographic area that owns and operates a cellular system.

cellular signal The radio waves that carry information between your cellular phone and the cellular system.

cellular system The cellular equipment in a given geographic area that relays signals to and from individual cellular telephones and the landline telephone system.

cigarette lighter adapter An accessory device that allows you to power your phone and charge any attached batteries from a car’s cigarette lighter.

D

DTMF tones See Dual Tone Multi-Frequency tones.

default A feature's original setting as pre-programmed in the factory.

Dual Tone Multi-Frequency tones The tones that your telephone transmits when you press a key on the keypad. These tones are used to access automated calling systems such as Voice Mail, paging services, banking-by-phone, etc. These tones are also heard by the party on the other line if you use the Scratchpad while a call is in progress. Synonymous with Scratchpad tones or touch tones.

E

emergency call This feature allows you to make an emergency call even if your phone is locked, by dialing 911 or another emergency access number.

F

fringe area The outermost range of a cellular system where signals are weak.

function keys The non-numeric keys on your phone's keypad used to perform specific tasks.

H

home system The local cellular system where you obtain your cellular service.

home type system A cellular system of the same type as your local cellular system. See also non-home type system, and system type.

I

icon One of the variety of symbols used to designate menu features and messages.

indicator A light on your phone that gives you information about your phone's status.

Internal Charger A charger built into your phone for use with an AC adapter or cigarette lighter adapter. See "Using the Internal Charger" on page 16.

K

Keypad Tones The sounds produced through your phone's speaker when you press the keys. See "Turning Keypad Tones On and Off" on page 60.

L

landline The telephone system used for conventional office and home phones.

lock Use this feature to prevent unauthorized access to your telephone.

lock code A three-digit code used to access your phone once it has been locked. The factory programmed lock code is 123. To view or change your lock code, see "Locking/Unlocking Your Phone" on page 63.

M

memory location A space in the internal Phone Book where you can store a telephone number and a name.

menu feature Any feature that can be accessed through the menu system.

menu system The hierarchical arrangement of your phone's features that allows for quick, intuitive access.The top-level menu contains: Phone Book, Timers, Tone Control, Lock Secure, Phone Options, and Message Center.

Message Center Key Located on the bottom row of the keypad, the dedicated Message Center Key provides quick access to messages and messaging functions. See "Using Voice Mail and Text Messages" on page 84.

N

name directory An alphabetical list of the names and telephone numbers you have stored into your phone's internal Phone Book.

Nickel Metal Hydride (NiMH) A battery technology used in personal cellular telephone batteries.

P

pause A special character that tells your phone to "pause" or wait for your input before sending a group of numbers stored in memory.

Pause Dialing A method of storing Phone Book entries that allows you to store multiple strings of numbers in one memory location; useful, for instance, in accessing automated phone systems. See “Storing and Placing Numbers with Pause Dialing” on page 41.

Personal Identification Number (PIN) A private numeric password that protects personal accounts such as bank-by-phone or Voice Mail.

prompt A message requesting input.

R

road map The visual representation of your phone’s menu system provided in this user guide.

S

scratchpad tones The tones that your telephone transmits when you press a key on the keypad. These tones are used to access automated calling systems such as Voice Mail, paging services, banking-by-phone, etc. These tones are also heard by the party on the other line if you use the Scratchpad while a call is in progress. Synonymous with Dual Tone Multi-Frequency tones.

scroll To move backward or forward through a list; for example: to move backward or forward through the menu system or the name directory.

security code A six-digit code used to access sensitive features in the Secure Options submenu of the Lock/Security menu.

service provider A company affiliated with a cellular carrier that provides satellite service to its customers.

signal The radio waves that carry information between your phone and the satellite system.

Speed Dial a feature that enables you to place a number by entering the two-digit location of your number and then pressing and holding the Smart Button.

standby-time The length of time a battery typically lasts if the phone is left ON but is not in use.

submenu A secondary level of your phone’s menu system hierarchy.

System Identification A five-digit number that identifies your home cellular system. An even number indicates a wireline system and an odd number indicates a non-wireline system. See also system type.

system mode A setting that determines if your cellular phone will operate in digital or analog mode.

T

talk-time The amount of time that you spend talking on the phone.

toggle To switch between two possible options; for example: on versus off.

Turbo Dial™ keys a feature that enables you to dial numbers stored in memory locations by pressing and holding a single number key.

TDMA (Time Division Multiple Access) TDMA is an efficient method of providing digital cellular communication by allowing several different conversations on the same carrier frequency.

V

Voice Mail Contact your Service Provider for availability.

volume keys Located on your phone's keypad, the upper and lower volume keys are used to adjust phone volume.

W

wireline See system type.

Index

A

access number for voice mail 86
accessories 93, 93–94
  batteries 93
  cigarette lighter adapter 93
  hands-free kit 94
  headset 93
  modem 93
accessory connector port 10
analog
  channel 74
  mode 22
audible timer
  one-minute 53
  repeating 54
authentication (A-Key) entry 70
automatic answer 81
automatic hands-free 80

B

battery
  accessories 93
  charge times 17
  charging 16
    internal charger 16
    tips 17
  checking levels 15
  cover
    removal 13
  disposal 13
  installing 14
  life 95
  low battery warning 16
  maintaining 18
  overview 12
  power save mode 82
  removing 14, 15
  standby-time 12
  storage 13
  talk-time 12
  types 12
battery level
  checking 15
  indicator 15, 20
Battery Level Indicator 20
busy signal 96
button
  Message 10

C

call
  ending 21
  placing 21
    calling card call 44
    restricting call placement 66
  receiving 22
    while phone is locked 64
Call Back number 89
Call Receive 96
call timer
  automatically display individual 53
  cumulative 52
  individual 51
  resettable 51
  resetting 52
call waiting 33
Caller ID 37
Caller Line ID 34
calling card
  PIN number 44
  placing calling card call 44
  storing information 43, 97
calls
  dialed 36
  received 35
cellular system 78
changing your number 76

charge times, battery 17
chargers
  internal 16
charging batteries 16
cigarette lighter adapter 93
clearing a memory entry 29
connector port 10
cumulative timer 52

D

dialed calls 36
digital
  channel 74
  indicator 18, 19
  mode 22
display
  System Identification 82

E

earpiece 10
ending a call 21

F

feature review 79
function keys 10

G

glossary 98–102

H

hands-free
  automatic 80
  kit 94
  operation 94
headset 93
headset jack 10
Home Only Mode 78
home system 76

I

In Use Indicator 19
In-Building Indicator 19
indicator
  Battery Level 20
  Digital 19
  In Use 19
  In-Building 19
  No Service 19
  reading 19
  Short Message Service 88
  Signal Strength 19
  SMS message waiting 20
  Voice Message Waiting 20

J

jack, headset 10

K

key answer, multiple 81
key presses 11
keypad tones 60

L

language, select for display 83
lock code
  changing 65
  viewing 65
locking phone
  answering calls while phone is locked 64
  automatically 63
  manually 63
locking/unlocking phone 63

M

Master Clear 70
Master Reset 69
memory location
  editing 46
  service level 66
  using phone book 26
message
  clearing 91
  unlocking 90
  viewing a short message 88

message alert 87
Message Center button 10
messages, locking 90
microphone 10
modem 93
Multiple Key Answer 81

N

No Service Indicator 19
non-wireline carrier 77

O

option
  clearing stored information 70
  reset 69

P

Pager Mode 73
pager mode 57
pause dialing 42
pauses
  entering into a number 41
  placing a call with pauses 42
PCMCIA modem 93
phone book
  clearing entry 29
  editing entries 46
  entering a name 27
  entering letters 27
  entry
    recalling by location 39
    recalling by name 39
    recalling with short cuts 29
  recalling entry
    by location 28
    by name 28
  storing entry 40
  storing names and numbers 26
  using 26
phone number, viewing your own 18, 75
phone overview 10
PIN number 44
placing a call 21
power button 10, 95
power save mode 82
power sources, switching 17
Priority Call 30
prompts, defined 11

R

recalling entry by location 28
recalling entry by name 28
received calls 35
receiving call
  automatic answer 81
  multiple key answer 81
  procedure 22
Recent Calls menu 33
redialing a number 23
removing battery covers 13
Reversed Preference Mode 78
ringer
  selecting style 59
  suppressing 22
road map 32
  call timers 50
  lock security 61
  phone book 38
  recent calls 33
  tone controls 56
Roam Indicator 96

S

Scan A Mode 78
Scan B Mode 78
scratchpad tones 30, 60, 96, 97
scrolling speed
  setting 92
Seamless Connection 17
security options
  managing 65
  resetting 69
  service levels 67
service level 66, 67
Short Message Service

clearing message 91
indicator 20
indicators 88
locking message 90
unlocking a message 90
viewing messages 88
Short Messaging Services (SMS) 87
Signal Strength Indicator 19
single timer 54
SMS Message Waiting Indicator 20
Speed Dial 29
Standard Mode 78
standby mode 20
standby-time 12
storing
calling card information 43
names and numbers 26
storing names and numbers 40
System Identification
viewing 82
System Mode 78

T

talk-time 12
timer
audible one-minute 53
audible repeating 54
automatically display individual timer 53
cumulative call timer 52
individual call timer 51
one-minute audible 53
repeating audible timer 54
reset 52
resettable call timer 51
single 54
tips, defined 11
tones
alternating high/low 96
call alert 57
turning scratchpad tones on and off 60
Turbo Dial™ 26, 30
turning phone off 18
turning phone on 18

U

unanswered call indicator 22
unlock phone 95

V

voice mail 58, 96
dialing 85
edit access number 86
Voice Message Waiting Indicator 20
voice privacy 62
Voicemail 20
volume
adjusting 24
muting 24
volume keys 10

W

wireline carrier 77

Patent Information

Manufactured under one or more of the following U.S. patents:

4121218	4616314	4741034	D306594	5083304	D337332	D354062	D368696
4138681	4617520	4742562	4912602	D324024	5230007	5384825	5510693
4193036	D286778	D295627	4918732	D324388	5230093	D356084	5511235
4254382	4626309	4746242	4922178	5095503	5233633	5402447	D369162
4302845	4628529	D295973	4945570	D325028	5235492	5406146	5513078
4312074	4629829	D295975	4954796	D325583	5237257	5406562	D369359
4327319	4630304	4751737	4959851	5109536	5239127	D357224	5519303
4329666	4630305	D296187	4963812	D325915	5241545	D357457	5519346
4369516	4633141	4761621	4963843	5113436	5241548	5410741	5524276
4369522	4636593	4764737	4965537	5117450	5241650	D357680	5524278
4378603	4636741	D297734	4972355	5121047	5241693	D357681	D370463
4390963	D288432	D297735	4972432	5122480	5242767	5428836	5530922
D269873	4648125	4777564	4972455	5122722	D339582	D359734	5542116
4398265	4649543	Re.32768	4975808	D327061	5249302	D359735	5544250
4400584	D288683	D299136	4984290	5128834	5251331	D359959	D372481
4400585	4654655	4797929	D314173	D328302	D340710	5432017	5546275
D270835	D289156	4798975	D315330	5142551	5260988	D360632	5546380
D271491	4662691	4800348	D315346	5142696	5261119	5438684	D372896
Re.31470	4667333	4802236	D315543	5146620	5262710	D361070	5551078
4431977	4668917	4809356	D315559	5148471	5263052	5442680	5559471
4434461	4670747	4811377	D315565	5148473	5276707	5446763	D374424
4455534	4672502	4811404	5004992	5148961	5278994	5448763	D374872
4462098	4680787	4827226	D315907	5150359	D343173	5448771	5572193
D275951	4681476	4827507	5008925	5150384	5280637	5453997	5574976
4484153	4683585	4829274	D316417	5152006	D344087	D362840	5577268
4485486	4692726	4837534	D316859	5157693	5287553	5457744	D375732
4486624	4704588	D301476	5017856	5163159	5287555	5459640	D375733
D276809	D292578	4843621	5018188	5164652	5287556	5463646	D375734
4491972	4706036	4845772	5020091	5166596	D344511	5465412	D375932
D277667	D292920	D302015	5020092	5175759	5301365	5469177	D375952
4504834	4710724	4851966	5020093	5175874	5321847	5475752	D376127
D278708	4711361	4868576	5028083	D332261	D348880	D365094	5588041
4523155	4715063	4870686	5028859	5182749	5349588	D365817	5589796
4546329	4716319	D303656	5029044	D332785	5359696	5486843	5590177
4550426	4716391	4876552	5029233	5185566	5361400	5487184	5594778
4551696	4723305	4879533	5031028	5187809	5363071	5488335	5594951
4564821	D294257	D305427	5036532	5193223	5365549	5488649	D377792
D282169	4727306	4896124	5053924	5195106	D352497	D366872	D377934
4571595	4727583	4897873	5057762	5195108	5366826	5493198	5604050
4573017	4730195	D305717	D320780	5201069	D353131	5493714	5606730
4574243	4734635	4904549	5059885	5204977	D353361	5497126	D378366
4585957	4736277	4905288	5060294	5210793	5375143	5497382	5613229
4602218	4737976	4905301	D322783	5214675	5375258	D367640	5613863
D284759	4740794	D306293	D322955	5222104	5379324	5499394	5615233
D285439	4741018	D306441	5081674	5222251	D354055	5506490	5621763

PAT111398

Other patents pending.