EXHIBIT 15

Instruction Manual

Exhibit Summary:

This mobile station transceiver is based on the design of a European GSM model. The user functionality and features are nearly identical to that GSM model. The user instruction manual that is included in this submission is a version of the manual for that GSM model. If necessary, a final version, as updated for this product and intended for the North American market, can be provided upon request.

MOTOROLA

500 series

Quick Access Menu

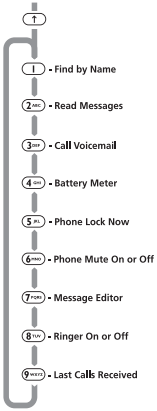

Menu Navigation

Items shown in ***italics*** are available only when **Extended Menus** are switched on.

\# If your service provider has added their own menu, the Phone Book menu will not be the first item in the Options menu.

† Availability depends on the type and settings of the SIM card and/or your subscription to these services.

* The **Accessory Setup** option is available only when a car kit is fitted.

Options Menu

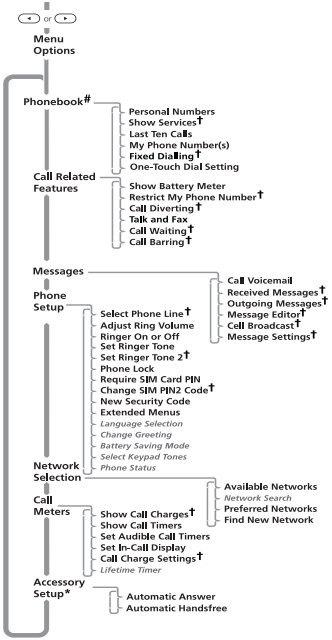

Quick Reference

English

Quick Reference

Special Keys

(⊙)	Press and hold to turn the phone on; press to turn the phone off.
(OK)	Press to accept call, accept setting, accept option.
(C)	Press to reject call, reject setting, clear digits, reject option.
(◄) (►)	Press to move through the menu and feature choices, or to edit an SMS message.
(◄)	Press to adjust the speaker or ringer volume.

Making a Call

Enter the number using the digit keys and press (OK).

Receiving a Call

To receive a phone call, press (OK) or any other key except (⊙) or (C).

Ending a Call

To end a phone call, press (OK).

GSM Emergency Calls

To dial the GSM emergency number, press (1)(1)(2 ABC)(OK). The call will be directed to a central emergency operator.

Redialling the Last Number Called

When in standby mode, press (OK)(OK).

Dialling Phone Book Numbers

To dial a specific Phone Book Number, dial

Location (#)(OK)

One-Touch Dialling

Press and hold the appropriate digit key (1) to (9 WXYZ).

Locking the Keypad

Press (*) and (#) simultaneously.

Quick Access Features

Press (↑) followed by the appropriate key (1-9) or press (↑), scroll to the feature and press (OK) to select.

Introduction

Congratulations on your purchase of a cellular telephone from *Motorola*, the world leader in cellular technology.

All *Motorola* cellular telephones are manufactured to exacting specifications and world-class quality standards, and are designed to withstand the harshest environmental conditions. Our commitment to Total Customer Satisfaction and over sixty five years of experience in personal communications mean you can depend upon the quality of this *Motorola* product.

This cellular telephone has been designed for use with networks conforming to the GSM900 standard (Global System for Mobile communications). By using digital communications methods, your phone provides a number of advantages over traditional cellular systems:

- Superior speech quality is attained without the usual background noises and interference.
- Your conversation may be encrypted for security. Conversations cannot be eavesdropped using scanning equipment when the signal is encrypted.
- You are not restricted to using your phone within one country.

Your subscriber number is not contained within the phone as with other systems. Instead, a 'Smart Card' known as a SIM (Subscriber Identity Module) is supplied by your Cellular Service Provider. All call billing is made to the subscriber number on the card whether it is used in this or any other GSM 900 unit.

Understanding this Manual

Many of your phone options are accessed by a simple menu system. A full description of the menus and how to move around them is covered in the later section ***Menu Navigation***. When the manual describes the use of each menu item, it will be assumed that you are familiar with the menu system.

Key Presses

Key presses are represented in this manual using symbols so that you may locate and use the required sequence quickly. A sequence of key presses may be shown as follows:

(I) (0+) (C)

This means that you should press the (I) key followed by the (0+) key and then the (C) key, in sequence, not simultaneously.

The key shapes represented in this manual may differ from the keys on your phone.

Entering Information

When you are requested to enter information, such as the number of the phone you wish to call, this is represented in **bold** type. For example:

Phone No. - enter the required telephone number.

PIN Code - enter your Personal Identification Number.

Unlock Code - enter your unlock code.

Location - enter the Phone Book location number.

Prompts and Messages

Your phone responds to key presses by displaying either easy to understand prompts that guide you to the next action, or simple messages confirming that your action is complete. Prompts and messages are represented in this manual in LCD style, for example:

`Enter PIN` or `Completed`.

Other Symbols

You will find the following symbols used throughout this manual:

A Note contains additional information which is relevant to the feature/item.

A Caution contains important additional information which is relevant to the efficient and/or safe usage of your phone.

Total Customer Satisfaction

At Motorola, Total Customer Satisfaction is a top priority. If you have a question, a suggestion or a concern about your Motorola Cellular Phone, Motorola wants to hear from you.

Please contact the Motorola Cellular Response Centre by fax on: +44 (0) 131 458 6732, or use one of the local phone numbers in the following countries:

Austria	0660 7246
Belgium	0800 72 370
Denmark	43 43 15 56
Egypt	02 3411800
Eire	01 402 6887
Finland	0800 117 036
France	0801 63 67 03
Germany	0180 35050
Greece	00800 441 28150
Italy	02 696 333 16
Jordan	06 863750
Kuwait	484 2000 Ext 1177
Lebanon	01 744156
Luxembourg	0800 21 99
Netherlands	0800 022 27 43
Norway	22 55 10 04
Oman	790925
Portugal	01 318 0051
Qatar	418999
Saudi Arabia	01 2303294
South Africa	0800 11 48 49
Spain	902 100 077
Sweden	08 445 1210
Switzerland	0800 553 109
Turkey	0212 2729090
UK	0500 55 55 55
United Arab Emirates	04 32 11 66
For e-mail queries contact:	mcrc@ei.csg.mot.com
For Internet queries contact:	http://www.mot.com

Motorola's Warranty

Your Cellular Phone is warranted by Motorola to be of satisfactory quality, fit for its purpose and comply with applicable Motorola specifications for a period of twelve (12) months from the date you bought it (verified by reference to your proof of purchase).

This warranty does not apply if the phone has

1 been mishandled, misused, wilfully damaged, neglected, improperly tested, repaired, altered or defaced in any way.

2 a defect arising as a result of any failure to follow instructions either in the manual or product specification.

3 a defect which has arisen from the use of non-Motorola approved accessories or ancillary items attached to or in connection with the telephone.

This warranty does not affect your statutory rights as a consumer.

Contents

Safety

Important information for the efficient and safe operation of your phone 7

About Your Phone, Battery and SIM Card

Introduces your phone, explains how to charge and maintain batteries and explains about your SmartCard 11

Making and Receiving Phone Calls

Explains how to adjust volume, how to call a number, how to redial and how to accept a call 15

Menu Navigation

Explains how to access and use the phone's menus 23

Using the Options Menu

Provides an explanation of the Options Menu 25

Using the Quick Access Menu

Provides an explanation of the Quick Access menu and how to use it 43

Approved Accessories

Details accessories available for use with your phone 45

What To Do If

Helps you to solve any problems that may occur 47

Index

A comprehensive index 49

The Manufacturer reserves the right to make changes in technical and product specifications without prior notice.

IMPORTANT

For the efficient and safe operation of your wireless handheld portable telephone, observe these guidelines.

Exposure To Radio Frequency Signals

Your wireless handheld portable telephone is a low power radio transmitter and receiver. When it is ON, it receives and also sends out radio frequency (RF) signals.

European and International agencies have set standards and recommendations for the protection of public exposure to RF electromagnetic energy.

- International Commission on Non-Ionizing Radiation Protection (ICNIRP) 1996
- Verband Deutscher Elektringenieure (VDE) DIN-0848
- Directives of the European Community, Directorate General V in Matters of Radio Frequency Electromagnetic Energy
- National Radiological Protection Board of the United Kingdom, GS 11, 1988
- American National Standards Institute (ANSI) IEEE.C95.1-1992
- National Council on Radiation Protection and Measurements (NCRP). Report 88
- Department of Health and Welfare Canada. Safety Code 6

These standards are based on extensive scientific review. For example, over 120 scientists, engineers and physicians from universities, government health agencies and industry reviewed the available body of research to develop the updated ANSI Standard.

The design of your phone complies with these standards when used normally.

Antenna Care

Use only the supplied or approved replacement antenna. Unauthorised antennas, modifications or attachments could damage the phone and may violate FCC regulations.

Phone Operation

Normal Position: Hold the phone as you would any other telephone with the antenna pointed up and over your shoulder.

Tips on Efficient Operation: For your phone to operate most efficiently:

- Extend your antenna fully.
- Do not touch the antenna unnecessarily when the phone is in use. Contact with the antenna affects call quality and may cause the phone to operate at a higher power level than otherwise needed.

Batteries

All batteries can cause property damage, injury or burns if a conductive material such as jewellery, keys or beaded chains touches exposed terminals. The material may complete an electrical circuit and become quite hot. To protect against such unwanted current drain, exercise care in handling any charged battery, particularly when placing it inside your pocket, purse or other container with metal objects. When the battery is detached from the phone, your batteries are packed with a protective battery cover; please use this cover for storing your batteries when not in use.

Driving

Check the laws and regulations on the use of wireless telephones in the areas where you drive. Always obey them. Also, if using your phone while driving, please:

- give full attention to driving - driving safely is your first responsibility
- use hands-free operation, if available
- pull off the road and park before making or answering a call if driving conditions so require.

Electronic Devices

Most modern electronic equipment is shielded from RF signals. However, certain electronic equipment may not be shielded against the RF signals from your wireless phone.

Pacemakers

The Health Industry Manufacturers Association recommends that a minimum separation of six (6") inches be maintained between a handheld wireless phone and a pacemaker to avoid potential interference with the pacemaker. These recommendations are consistent with the independent research by and recommendations of Wireless Technology Research.

Persons with pacemakers:

- Should **ALWAYS** keep the phone more than six inches from their pacemaker when the phone is turned on.
- Should not carry the phone in a breast pocket.
- Should use the ear opposite the pacemaker to minimise the potential for interference.

If you have any reason to suspect that interference is taking place, turn your phone **OFF** immediately.

Hearing Aids

Some digital wireless phones may interfere with some hearing aids. In the event of such interference you may want to consult your hearing aid manufacturer to discuss alternatives.

Other Medical Devices

If you use any other personal medical device, consult the manufacturer of your device to determine if they are adequately shielded from external RF energy. Your physician may be able to assist you in obtaining this information.

Turn your phone **OFF** in health care facilities when any regulations posted in these areas instruct you to do so. Hospitals or health care facilities may be using equipment that could be sensitive to external RF energy.

Vehicles

RF signals may affect improperly installed or inadequately shielded electronic systems in motor vehicles. Check with the manufacturer or its representative regarding your vehicle. You should also consult the manufacturer of any equipment that has been added to your vehicle.

Posted Facilities

Turn your phone **OFF** in any facility where posted notices so require.

Aircraft

FCC regulations prohibit using your phone while in the air. Switch **OFF** your phone before boarding an aircraft.

Blasting Areas

To avoid interfering with blasting operations, turn your phone **OFF** when in a "blasting area" or in areas posted: "turn off two-way radio". Obey all signs and instructions.

Potentially Explosive Atmospheres

Turn your phone **OFF** when in any area with a potentially explosive atmosphere and obey all signs and instructions. Sparks in such areas could cause an explosion or fire resulting in bodily injury or even death.

Areas with a potentially explosive atmosphere are often, but not always, clearly marked. They include fuelling areas such as petrol stations; below decks on boats; fuel or chemical transfer or storage facilities; vehicles using liquefied petroleum gas (such as propane or butane); areas where the air contains chemicals or particles, such as grain, dust, or metal powders; and any other area where you would normally be advised to turn off your vehicle engine.

For Vehicles Equipped with an Air Bag

An air bag inflates with great force. **DO NOT** place objects, including both installed or portable wireless equipment, in the area over the air bag or in the air bag deployment area. If in-vehicle wireless equipment is improperly installed and the air bag inflates, serious injury could result.

European Union Directives Conformance Statement

This product is in conformance with the requirements of the applicable EU Council Directives.

Declarations of Conformance with the requirements are located at:

Motorola Ltd.
European Cellular Subscriber Division
Midpoint, Alençon Link
Basingstoke, Hampshire RG21 7PL
United Kingdom

APPROVED for connection to telecommunications systems specified in the instructions for use subject to the conditions set out in them.

S/1357/4/V/503894

About Your Phone, Battery and SIM Card

The Keys

Press and hold to turn the phone on; press to turn the phone off.

Press to make and receive calls. Press to end calls.
Press to confirm the choice of menu or feature.

Press and release to clear a digit in the display; press and hold to clear the entire display.

Press to move through the menu and feature choices, or to edit an SMS message.

Press to access the Quick Access Menu features.

Press to adjust the earpiece speaker volume. Release the key and hold it down again to change direction.

The Display

The display on your phone can show alphanumeric characters as well as useful information symbols. The various elements of the display are as follows:

Signal Strength - indicates the strength of the coverage in your current cellular system area. The more bars lit, the better the chances of successfully making and receiving calls. Also indicates phone is switched on.

Battery Charge Indicator. The more segments displayed, the greater the battery charge. Flashing indicates charging.

In Use. Displayed when a call is in progress.

Roam. Displayed when you are registered on a Network other than your home Network.

Short Message Service[1]- Displayed when the phone has received a message. The symbol will flash when your message storage area is full.

Voicemail[1]- Displayed when your voicemail has received a message.

Ringer On. Displayed when the call ringer is selected. If you select the No Ring option this symbol will not be displayed.

1. *Network and subscription dependent feature.*

Your Battery

Batteries and Charging Information

To ensure that you enjoy maximum battery life and use your battery to its fullest capacity:

- Always use *Motorola* approved battery chargers.
- The battery should be at or near room temperature when charging.
- Once a week, allow your battery to discharge completely before recharging (to fully discharge, leave your phone on until it turns itself off).

! *Do not leave the battery connected to any charger for longer than 24 hours.*

☞*A new battery's full performance is achieved only after two or three complete charge and discharge cycles.*

- Best battery performance will be achieved when you regularly charge and discharge batteries as instructed.
- Battery performance is greatly affected by the coverage of the network.
- Keep the antenna fully extended whenever possible to ensure maximum signal strength.
- The performance of your batteries will gradually reduce if used substantially.
- If left unused, a fully charged battery will discharge itself in approximately one month.
- When not in use, store your battery uncharged in a cool, dark and dry place.

Removing the Battery Cover

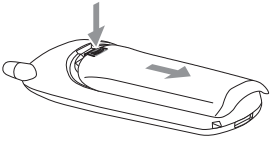

Installing the Battery

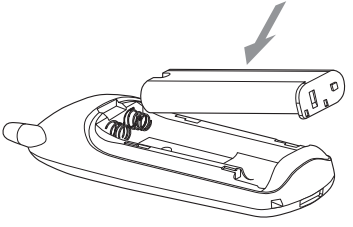

☞*When re-inserting the battery, it can only be inserted one way with the black plastic 'foot' of the battery pointed to the left hand side.*

Charging the Battery

Insert the connector on the travel charger into the socket at the base of the phone and the plug into a suitable mains socket.

☞*The battery door must be closed during charging.*

* The phone can be either on or off during charging.

Using 'AA' Batteries

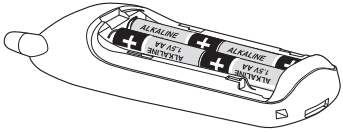

You can use Alkaline and Lithium 1.5 Volt AA Batteries in your phone. A different battery door is needed. This can be obtained from your dealer as an accessory.

! *These batteries should not be used with Travel Chargers or Cigarette Lighter Adaptors.*

Low Battery Warning

When the battery level is low and only a few minutes of talk time remain, a warning signal (two double beeps) will sound, and `Low Battery` will be displayed.

When the battery is completely discharged, your phone will turn off.

Battery Care and Storage

To prolong the life of your batteries, avoid exposing them to temperatures below -10°C (14°F) or above 45°C (113°F). Never leave your phone or batteries in extreme temperatures (over 60°C (140°F)), for example, behind glass in very hot, direct sunlight.

Battery Disposal

To dispose of batteries, check with your local recycling centre for a battery recycler near you. Never immerse batteries in water. Never dispose of batteries in fire.

Your SIM Card

Your SIM (Subscriber Identity Module) card was supplied by your Cellular Service Provider when you bought your phone. You will not be able to make or receive calls if you do not have a SIM card inserted in your phone.

☞ *Some networks allow you to make emergency calls without a SIM card inserted.*

The SIM card is a 'Smart Card' that contains your phone number, service details and memory for storing Phone Book numbers and messages. You can therefore use your SIM card in someone else's GSM 900 phone and you will be charged for the call.

Like a bank or credit card, you should keep your SIM card secure. Do not bend or scratch your card and avoid exposure to static electricity or water.

! *Switch off your phone before inserting or removing the SIM card. Failure to do so may damage the memory on your SIM card.*

SIM Card Insertion and Removal

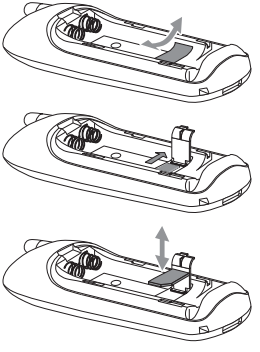

Switching Your Phone On and Off

Press and hold (⊙) to turn phone on and off.

If you switch the phone on and there is no SIM card inserted, you will be asked to check and insert one. Once inserted, the phone will check that the SIM card is valid.

As the phone searches and finds a suitable network to connect to, the network name will be displayed. You may be required to enter a **PIN Code** or **Unlock Code**.

Entering Your SIM Card PIN Code

Enter the **Pin Code** and press (OK).

As you type in each digit of the PIN code a * character will be displayed.

If you make a mistake, press and release the (C) key to remove the last digit. Holding the (C) key down will remove the entire entry.

If the PIN code entered is incorrect, the warning message `Wrong PIN` will be displayed, followed by `Enter PIN`.

! *If the PIN number is entered incorrectly three times in a row, your phone will automatically lock-up and the* `Blocked` *message will be displayed. See 'Unblocking Your Phone' later in this manual, under the heading 'Phone Setup - Require SIM Card PIN' for details on unblocking your phone.*

Entering Your Unlock Code

If your phone displays the message `Enter Phone Unlock Code` you must enter your unlocking code by entering the **Unlock Code** and pressing (OK).

The unlock code is a four digit number which is set at manufacture to **1234**. The code can be changed. See 'Phone Lock' in the Phone Setup Menu section for more details.

If you forget your unlock code, press the (◄) or (►) key. This will display the 'Change Unlock Code' option. Press (OK), **Security Code**, enter a new unlock code, and press (OK).

Locking the Keypad

Press the (*) and (#) keys simultaneously to prevent accidental usage of the phone. To remove the lock, press (*) and (#) simultaneously. All keys with the exception of the (⊙) key will be disabled. You can still answer an incoming call by pressing (OK) when the keypad is locked.

Making a Phone Call

Enter the number using the digit keys and press (OK).

If you make a mistake, press and release the (C) key to remove the last digit. Holding the (C) key down will remove the entire number.

To end your call press (OK).

Automatic Redial

If your call attempt does not succeed as a result of the system being busy, the message `Redial?` will be displayed for five seconds. Pressing (OK) at this point will automatically redial the phone number.

Redialling the Last Number Called

When in standby mode, press (OK) (OK).

One-Touch Dialling Phone Book Numbers

To quickly retrieve and dial a number stored in the first nine locations of your Phone Book, press and hold the appropriate digit key. For example, pressing and holding (2 ABC) will dial the phone number stored in location 2 of your Phone Book.

Dialling Phone Book Numbers

Enter a Phone Book **Location** and press (#) (OK).

If you don't know the exact location, you can enter a random location and then use the (◄) or (►) key to scroll to the number you want.

International Phone Calls

To make an international phone call press and hold the (0 +) key. After a couple of seconds the international dialling prefix + will appear in the display, this allows you to call from any country without knowing the local international access code.

Inserting Pauses Into Phone Numbers

To obtain a three second 'pause' character in a phone number, press and hold the (*) key for a couple of seconds, the pause symbol ¤ will appear.

The pause character produces a three second delay whenever it is used. However, the first pause character in a phone number is a special case, it will not begin its delay until the call is answered.

GSM Emergency Calls

Provided that your phone has found a network, you will be able to dial the worldwide GSM emergency number. The call can be made regardless of any security codes and, depending on the network, with or without a SIM card inserted.

The emergency call will be directed to a central emergency operator.

To dial the worldwide GSM emergency number, press (1) (1) (2 ABC) (OK).

Receiving a Phone Call

To receive a phone call, press OK or any number key.

If your keypad is locked, press OK to receive a call.

If you do not wish to answer a call you can press and hold the C key to reject the call.

If your phone rings and you do not answer it, the message `Unanswered Call` will be displayed to show you that a call attempt was received.

Ending a Phone Call

To end a phone call, press OK.

In-Call Menu

The "In-Call" menu provides access to additional functionality during a call.

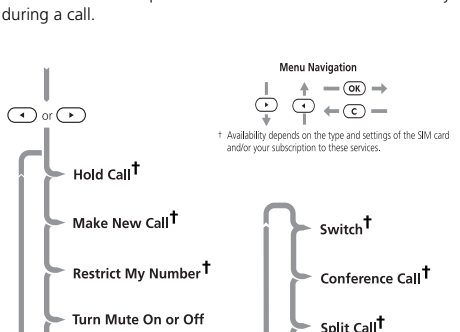

† Availability depends on the type and settings of the SIM card and/or your subscription to these services.

Entering the In-Call Menu

The "In-Call" menu is accessed by pressing the ◄ or ► key during a call.

Leaving the In-Call Menu

To leave the "In-Call" menu press the C key.

In-Call Menu Options

The options listed in the "In-Call" menu will dynamically change depending on the current call state. The following list contains all of the possible options in the "In-Call" menu.

☞ *Only some of the options will appear at any given time. The order of the options may vary.*

Hold Call

This option will put the active call on hold.

Make a New Call

This option allows you to make another call.

Restrict My Number

This option allows you to make a call without the remote user getting advanced warning of the number.

Turn Mute On or Off

Temporarily turns the microphone off during a phone call. Reselect this option to resume your conversation.

End Active Call

This option terminates the active call, and makes the call that was previously on hold, the active call.

End Held Call

This option will terminate a held call.

End Active And Held

This option will terminate all connected calls.

Switch

This option allows you to switch between the active call and the call that is on hold.

Conference Call

This option connects you with up to five other telephones on one call (see '***Conference Call***').

Split Call

This option allows you to separate an individual from the main Conference Call.

Reject Waiting Call

This option will reject a waiting call.

Reconnect

This option will make the call on hold the active call.

Reconnect Held Call

This option is similar to `Reconnect` but will appear if you have a call on hold, and a call waiting. `Reconnect Held Call` will make the call on hold the active call.

Call Holding and Call Waiting

Your phone supports the GSM options of Call Holding and Call Waiting. Using these options you can place a current phone call on hold and accept an incoming call or start a second call (See '***Call Waiting***' in the '***Call Related Features***' menu for details of how to control this feature).

Call Holding and Call Waiting Scenarios

The display will automatically change according to the status of your current call (or calls) and will propose the option that you are most likely to want. Press (OK) to accept this option or press (◄) or (►) to scroll through the "In-Call" menu for the alternative options. By following this procedure you will find that even the triple combination of an active call, a held call, and a call waiting is easy to manage.

The following points summarise the more common situations:

- To end the active call, press (OK). If you have a call on hold it is automatically connected.
- To put the active call on hold and make another call, press (◄) or (►) and select the `Hold Call` option, and then press (◄) or (►) again and select the `Make New Call` option[1].
- To put the active call on hold and reconnect a held call, press (◄) or (►) and then select the `Switch Calls` option.
- To accept a waiting call, press (OK). The active call will be placed on hold. If you prefer to end the active call before accepting the waiting call, press (◄) or (►) and select the `End Active Call` option, or `End Held Call` option as appropriate.
- To reject a waiting call, press (◄) or (►) and select the `Reject Call Waiting` option (or simply press the (C) key).

☞ *If you have an active call, a call on hold and a call waiting, you cannot accept the waiting call until you end either the active call or the held call, or join the active and held calls.*

1. *A quicker method of making another call is to enter the number to be called directly. As soon as you press the first digit, the display will change to `Call?`. This will disappear three seconds after the last key press, but if you press (OK) before then, your phone will place the current call on hold and attempt to call the number entered.*

Call Holding and Call Waiting Messages

During Call Holding and/or Call Waiting operations, your phone may display one or more of the following messages:

`Trying`

A request to hold the active call, swap the active with a held call, or add a member to a Conference Call, has been made.

or

A request to reconnect the held call has been made.

`Hold Failed`
The request to hold a call has been unsuccessful.

`Cannot Hold Second Call`
A call is already on hold, you cannot place two calls on hold at the same time.

`Reconnect Failed`
The held call could not be made active again.

`Busy Try Later`
Your phone is still working on a previous command. Wait a short time before repeating the command.

`Anonymous`
The person who is calling you has blocked their number from appearing on your phone.

`Unavailable`
The network is unable to provide the caller's number.

`Conference Unsuccessful`

The request for Conference Call has been unsuccessful.

`Transferring Call`

A request to transfer a call has been made.

`Transfer Unsuccessful`

The request to transfer a call has been unsuccessful.

Making a Conference Call

This option joins the active call with a held call. With Conference Call, you can have a conference with up to five other telephones. At any time during your call, you can add, disconnect or separate individuals from the Conference Call using other "In-Call" menu options.

☞*You must subscribe to both Conference Call and Call Waiting Supplementary Services to be able to use this feature.*

Initiating a Conference Call

To initiate a Conference Call, place the active call on hold, and dial another phone number. You will then have one active call and one call on hold.

Press the ◄ or ► key to enter the "In-Call" menu and select `Conference Call`. The currently active call and the call on hold will then join into one Conference Call.

Managing a Conference Call

While in a Conference Call, you will have the option to add new calls to the Conference Call or separate one of the members from the Conference Call.

Adding a New Call

There are a number of different ways to add new calls to the Conference Call:

- Using the digit keys.
- Using the `Make New Call` option from the "In-Call" menu.
- Recalling a Phone Book Entry using Quick Access
- Answer Call Waiting.

No matter which method is chosen to add a new call, the original Conference Call will be first placed on hold while the new call is being connected. You must then enter the "In-Call" menu and select `Conference Call` to join the New Call with the original Conference Call in progress.

Separate One of the Members in the Conference

During a Conference Call, you will also have the option to separate a selected member from the main Conference Call.

☞*In order to separate a member from the main Conference Call, there must not be any calls on hold.*

Press ◄ or ► during a Conference Call and select `Split Call`. You will then be presented with the phone number or name of all members of the Conference Call. Use the scroll keys to find the selected member of the Conference Call. Once the desired member is selected, press the OK key and select `Split Call`.

At this point, the selected call will be separated from the main Conference Call and private conversation between you and the selected member is possible.

To re-join all the parties again, select `Conference Call` from the "In-Call" menu.

Menus and Sub-Menus

Please read this section carefully before attempting to access a menu or feature.

A menu is a simple list of options. Some of these options provide access to a further list of options called a sub-menu.

Entering the Menus

◄ or ► accesses the Features menu

↑ accesses the Quick Access menu

Once the menus are entered, use the ◄, ►, OK and C keys to access and change individual options.

Leaving the Menus

To leave any of the menus, you can either press and hold the C key or repeatedly press the C key.

Moving to and Selecting a Menu Feature

To move from one option to another on the same level, use the ► key to scroll forwards and the ◄ key to scroll backwards. When you find the option you want, press the OK key to select it.

Depending on the feature you select, one of three things will happen:

- either a brief message will be displayed confirming an action, for example `Completed`.

  or

- a prompt will be displayed requesting you to enter information, for example `Enter PIN` or `Enter Name`.

  or

- the first option of a sub-menu will be displayed. You can select this option using the OK key or browse through the other options using the scroll keys.

To leave an option or sub-menu, press the C key. This will take you back to the parent menu item.

Menu Options with Security Codes

Some options are protected from misuse by requiring you to enter one of the security codes. In order to use these options, you must enter the requested code before proceeding.

Short, Extended and Personalised Menus

The menu diagrams show the condition of the menu settings when you first receive your phone. Some features are in the Short Menu and are shown in **bold** type. Other features are in the Extended Menu and appear in shaded *italics* - these features do not appear when you first scroll through the menus.

You can change which features appear in the Short and Extended Menus, and therefore personalise the menus, to suit your requirements.

If you want to move a feature from the Short Menu to the Extended Menu (or from the Extended Menu to the Short Menu), go to the feature and then hold down the OK key until a prompt appears offering the following choices:

- Add the current feature to the Short Menu/Extended Menu.
- Leave the current feature in the Short Menu/Extended Menu.

Select the option you want by pressing the OK key.

☞ *The settings for some menu features cannot be changed.*

Using The Options Menu

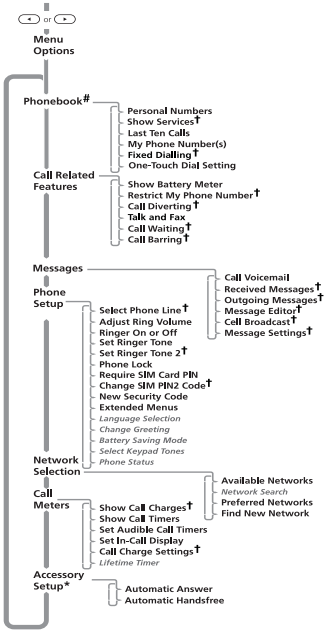

Menu Navigation

Items shown in ***italics*** are available only when **Extended Menus** are switched on.

\# If your service provider has added their own menu, the Phone Book menu will not be the first item in the Options menu.

† Availability depends on the type and settings of the SIM card and/or your subscription to these services.

* The **Accessory Setup** option is available only when a car kit is fitted.

Using The Phone Book Menu

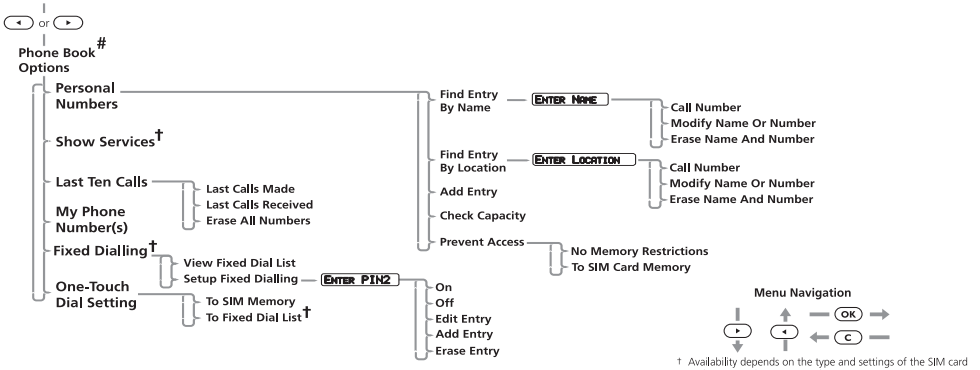

† Availability depends on the type and settings of the SIM card and/or your subscription to these services.
# If your service provider has added their own menu, the Phone Book menu will not be the first item in the Options menu.

You can store names and telephone numbers as entries in the *Personal Numbers list* and in the *Fixed Dial list* on your SIM card.

The amount of *Personal Numbers* entries will vary depending upon the type of SIM card issued by your Cellular Service Provider.

You can also store up to 40 entries in a Fixed Dialling list if you have this feature. Fixed Dialling allows you to limit use of your phone to particular numbers.

Each Phone Book entry comprises:

- A phone number - up to 20 digits*.
- A name - up to 50 characters* but typically 10 or less.
- A location label - from 1 to 155* in your Personal Numbers list, or 1 to 40* in your Fixed Dial list.

* *Dependent on SIM card.*

How to Enter a Name

The 0+, 1,... ...,8TUV and 9WXYZ keys are used to enter alphabetic characters.

For example, if you press the 5JKL key, the first displayed character will be J. If this is not the required character, then you can press the same key again to show K. Another press will display L, another... ...will display 5.

A long press of any of the keys will switch all the characters to lower case, a second long press will switch back to upper case.

To enter the next character press the appropriate key. If, however, the next character is on the same key as the previous character you will first need to press the ► key. Pressing the ► key a second time will produce a space.

If a mistake has been made, you can go back to the incorrect character by pressing ◄.

Characters can be removed from the display by pressing the C key.

The character under or before the cursor (▮) will be deleted.

Press the OK key to store the information.

Available Characters

Press the appropriate keys to get the following characters:

1	Space . 1 ? ! , @ _ & : " ( ) ' ¿ ¡ % £ $
	Space . 1 ? ! , @ _ & : " ( ) ' ¿ ¡ % £ $
2ABC	A B C 2 Ä Å à Æ ß Ç
	a b c 2 ä å à æ ß ç
3DEF	D E F 3 Δ É È Φ
	d e f 3 δ é è φ
4GHI	G H I 4 Γ ì
	g h i 4 γ ì
5JKL	J K L 5 Λ
	j k l 5 λ
6MNO	M N O 6 Ñ Ö Θ Ò Ω
	m n o 6 ñ ö θ ò ω
7PQRS	P Q R S 7 Π Ø Σ
	p q r s 7 π ø σ
8TUV	T U V 8 Θ Ü Ù
	t u v 8 θ ü ù
9WXYZ	W X Y Z 9 Ξ Ψ
	w x y z 9 ξ ψ
0+	+ - 0 x * / = > < #
	+ - 0 x * / = > < #

The top line for each key shows the upper case characters, the lower line shows the lower case.

MENU

Personal Numbers

To Find Entry By Name

Press OK to select this feature and enter the first three characters of a name.

The Phone Book entries will be searched and the first matching entry will be displayed. To display adjacent Phone Book entries use the ◄ or ► key.

To Find Entry By Location

Press OK to select this feature and enter a location number and press OK.

The Phone Book entries will be searched and an entry will be displayed. To display adjacent Phone Book entries use the ◄ or ► keys.

Call Number, Modify Name or Number or Erase Name And Number Options

Once a Phone Book entry has been selected, it can be called, modified or deleted.

Add Entry

This option is used to add (store) entries to the Phone Book.

Check Capacity

This option is used to check the number of free Phone Book entries in the SIM card.

Prevent Access

This option enables you to prevent access to the Personal Numbers list.

Show Services

This option displays a list of phone numbers and services provided by your Cellular Service Provider.

Last Ten Calls

The Last Ten Calls Made and Last Calls Received options can be used to call the ten most recently used phone numbers.

Once an option has been selected, use the ◄ or ► key to scroll through the list of phone numbers. Press the OK key to call the displayed number.

Erase All Numbers

This option erases all the numbers stored in your Last Ten Call Made and Last Ten Calls Received lists.

My Phone Number(s)

This option allows you to recall your cellular phone number.

To enter or change a number, scroll to the location and press OK. You will be prompted to enter a phone number and then a name. Press OK to store the information.

Fixed Dialling

☞*Availability of the Fixed Dialling menu depends on the type of SIM card.*

This feature allows you to limit use of your phone to a predefined list of telephone numbers (apart from an emergency number).

When Fixed Dialling is switched on, the only numbers that can be dialled from your phone are those stored (or whose prefix is stored) in the Fixed Dial list. If you attempt to dial any other number (apart from an emergency number), the message Restricted will be displayed. You will not be able to make fax or data calls.

To make a call when Fixed Dialling is switched on, either dial the number manually, or select it from the Fixed Dial list and press (OK).

Up to 40 entries can be stored in the Fixed Dial list. The list is stored on your SIM card.

! This option may be affected by the Call Barring setting.

View Fixed Dial List

This option allows you to scroll through the numbers in the Fixed Dial list. When you find the number you want, press (OK) to make the call.

Setup Fixed Dialling

The option allows you to switch Fixed Dialling on or off and to enter or change entries in the Fixed Dial list.

You will be prompted to enter your PIN2 security code when you select this option.

On

Switches fixed dialling on.

Off

Switches fixed dialling off.

Edit Entry

Modifies or clears an entry in the Fixed Dial list. When you select this option, the first non-empty location in the list will be displayed. Scroll to the entry you want to change and press (OK). You will be prompted to edit the phone number and the name. To erase the entry, press (C).

Add Entry

Adds a phone number and name to the Fixed Dial list. When you select this option you will be prompted to enter the phone number, name and a location number. If you do not specify a location number, it will be stored in the next available location.

☞ *When setting up your Fixed Dial list, you may want to reserve the first nine locations for phone numbers you wish to One-Touch Dial. See also 'One-Touch Dial Setting'.*

One-Touch Dial Setting

This option allows you to specify which Phone Book list can be One-Touch Dialled.

To SIM Memory

Switches One-Touch Dialling to your Personal Numbers list stored on your SIM card (locations 1 to 9).

To Fixed Dial list

Switches One-Touch Dialling to your Fixed Dial list (locations 1 to 9).

☞ *This option is only available if you have Fixed Dialling.*

Call Related Features

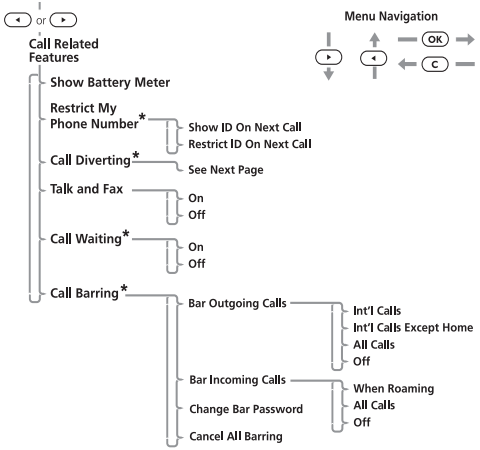

* Network and subscription dependent feature.

☞ *Items shown in* ***Italics*** *are available only when* **Extended Menus** *are switched on*

Show Battery Meter

This option displays the approximate amount of battery capacity remaining.

Restrict My Phone Number

This is a network feature. You will need to subscribe to a Caller Line Identification restriction feature with your Cellular Service Provider.

This option is used to send or restrict sending your phone number.

Call Diverting

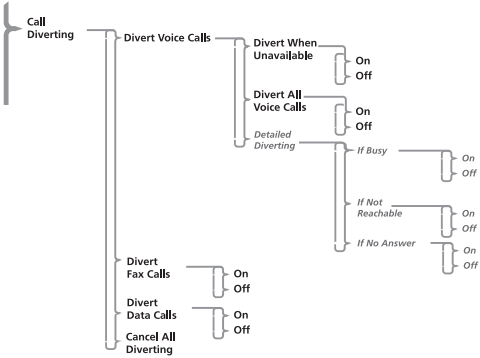

Call diverting is a network feature. If your phone is unavailable, or you do not wish to receive calls, incoming calls can be diverted to other phone numbers.

This option can be used to:

- Divert all incoming Voice calls unconditionally.
- Divert incoming Voice calls whenever your phone is unavailable, busy, not reachable or not answered.
- Divert incoming Fax calls.
- Divert incoming Data calls.
- Reset all diversion options to off.

☞ *You cannot change the call divert settings when you are out of GSM coverage.*

After selecting any of the call divert options there will be a short delay while the phone asks the network for the current setting.

Divert Voice Calls

This option will allow you to set your phone to *Divert When Unavailable*, *Divert All Voice Calls* or *Detailed Diverting*.

Divert When Unavailable

This option will enable you to divert all incoming Voice calls to a single number, whenever your phone is unavailable.

The option has two settings, On or Off.

If you change the setting to On, you will be asked to enter a diversion phone number using the digit keys.

☞ *Setting "Divert When Unavailable" to On will have the same effect as setting all "Detailed Diverting" options to On.*

☞ *When On, Divert When Unavailable takes priority over detailed diversion settings.*

Divert All Voice Calls

This option will enable you to *unconditionally* divert all incoming Voice calls to a single number.

The option has two settings, On or Off.

If you change the setting to On, you will be asked to enter a diversion phone number using the digit keys.

☞ *When On, Divert All Voice Calls takes priority over all other Voice call diversion settings.*

Detailed Diverting

These options will enable you to divert Voice calls to different numbers, depending upon the current status of your phone.

Each of the following detailed diverting options operate in the same way.

Each option has two settings, On or Off.

If you change the setting to On, you will be asked to enter a diversion phone number using the digit keys.

☞ *Detailed diversion settings are ignored while Divert All Voice Calls or Divert When Unavailable are On.*

If Busy

This option will divert incoming calls if your phone is busy.

If Not Reachable

This option will divert incoming calls if your phone cannot be contacted by the network.

If No Answer

This option will divert incoming calls if you do not answer the call.

Divert Fax Calls

This option will enable you to divert all Fax calls to a single number.

The option has two settings, On or Off.

If you change the setting to On, you will be asked to enter a diversion phone number using the digit keys.

Divert Data Calls

This option will enable you to divert all Data calls to a single number.

The option has two settings, On or Off.

If you change the setting to On, you will be asked to enter a diversion phone number using the digit keys.

Cancel All Diverting

This option will enable you to cancel the diversion of incoming calls.

! *This option resets all diversion settings to Off and removes all diversion numbers.*

Talk and Fax

This is a network feature that allows you to speak and then send or receive a fax during the course of a single call.

☞*Your phone supports a data and fax transmission speed of up to 9600 bps.*

Before making a Talk and Fax call, ensure that:

- Your phone is "fax-ready" (it has been switched off, connected to the fax, then switched back on). Connecting your phone to the fax in the middle of the call will not work.
- The Talk and Fax mode is set to On.

A Talk and Fax call automatically switches to fax mode when you start sending the fax. While the fax is being transmitted, the message Fax in progress will be displayed. The call automatically ends when the fax transmission is complete. You cannot switch back to voice mode in the same call.

☞*While a Talk and Fax call is active, incoming call services like Call Waiting and Call Holding are suspended.*

If you receive a Talk and Fax call when:

- Your phone is not fax-ready - you can only talk.
- Your phone is fax-ready but Talk and Fax mode is off - the call is automatically routed to your fax (you cannot talk).

On

Switches Talk and Fax mode on for the next and all subsequent calls.

Off

Switches Talk and Fax mode off for the next and all subsequent calls.

Call Holding and Call Waiting

Using these options you can place a current phone call on hold and accept an incoming call or start a second call.

If Call Waiting is On, you will be notified of a waiting call by an audible alert and by the message Call Waiting - Answer?. You can press the OK key to accept the waiting call, or use the ◄ or ► keys to scroll to an alternative option and then press OK.

☞*If you have Caller Line Identification, the caller's number or name is displayed instead of the Call Waiting message.*

Call Barring

This is a network feature which can be used to selectively bar outgoing and incoming calls.

If you change the barring setting, you may be asked to enter your barring password. There will be a short delay while the phone notifies the network of the new setting. When the change has been made by the network, the phone will display a confirmation message.

The *initial* password will be supplied to you by your Cellular Service Provider when you subscribe to this service.

☞*This option may be affected by the Call Diverting or Fixed Dialling settings.*

Using The Messages Menu

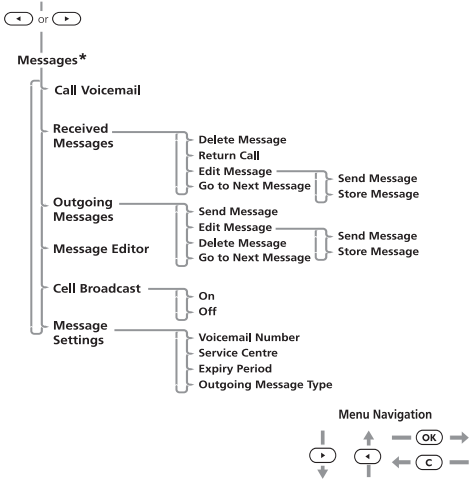

* Network and subscription dependent feature.

MENU

SMS Messages*

These are text messages that are sent specifically to and from your phone number.

When an SMS message is received, your phone:

1. Makes three short alert tones.
2. Displays the ✉ (messages) icon.
3. Stores the message for later viewing, if there is space. If there is not enough space, the ✉ icon will flash. One or more messages must be removed before the message can be stored.

Your Cellular Service Provider will transmit a message for a limited amount of time. If a memory location is not made available before the message is removed from the network, then you will not be able to receive or read it.

* Network and subscription dependent feature.

Cell Broadcast Messages

These are general messages, broadcast to a group of phones and can only be received when your phone is in standby mode.

These messages are broadcast in numbered 'channels' and, in general, each channel will tend to carry one particular type of information.

Please contact your network operator for a list of available channels and the information they supply.

When the message has scrolled across the display, the beginning of the message will be shown until you either remove it or a new message arrives.

How to read SMS Messages

You can use the scroll keys (◄ and ►) to scroll through messages in either the Received Messages or Outgoing Messages lists.

To display a specific message, enter the message number, for example press 5 to display the 5th message. If the message does not exist, `Invalid Msg Number` will be displayed.

Alternatively, to display the next message, press OK and select `Go To Next Message`.

How to Create and Edit SMS Messages

Use the *Message Editor* to create or modify text messages. When you enter the editor, the last message that was edited will be displayed. Press and hold C to clear the message and start a new one, or modify the message displayed.

Press OK once you have completed your message. You will then be presented with the following options:

`Send Message` - If you select this option you will be prompted for a phone number, enter the number and then press OK to send the message.

`Store Message` - Select this option to store your edited message in your Outgoing Messages list.

☞*If you don't store the message after it has been edited, you will lose all your changes as soon as you select another message to be edited.*

Call Voicemail

This option will make a call to the current voicemail number.

The voicemail number is entered using the 'Voicemail Number' option in the Messages menu.

Received Messages

Used to view and manage any SMS messages that have been sent to your phone number. When selected, a message indicating the total number of messages and how many are new will be displayed.

Press the OK key, when viewing any message, to enter the 'Delete Message', 'Return Call', 'Edit Message' and 'Go to Next Message' sub-menu.

Outgoing Messages

Used to view and manage any outgoing messages. These messages will be stored on your SIM card. When you select this option, the total number of messages will be displayed followed by the first message in the list.

☞*You cannot send an outgoing message until the Message Service Centre number has been set. See 'Message Settings'.*

Press the OK key, when viewing any message, to enter the 'Send Message', 'Edit Message', 'Delete Message' and 'Go to Next Message' sub-menu.

Message Editor

The Message Editor is used to edit the currently selected message and then to either send the modified message or store it in your Outgoing Messages list.

Cell Broadcast

Please contact your Cellular Service Provider for a list of available channels and the information they provide.

While a broadcast message is scrolling across the display you can stop and start it by pressing ◄. Press ► to restart the message from the beginning.

☞ *If you need to use the ◄ and ► keys for their normal functions while you are receiving a cell broadcast message, you must first remove the message.*

Message Settings

Voicemail Number

Used to enter a phone number which will be used by the 'Call Voicemail' option.

This location can be programmed to call any other number if you do not want instant access to voicemail.

This location may be programmed and locked by your service provider. If so, this feature option will not appear.

Service Centre

Before you can send any messages you must use this option to enter your Message Service Centre number. This number is obtained from your Cellular Service Provider.

Expiry Period

You can use this option to specify the maximum time, in hours, that your unforwarded messages are to remain with the Message Service Centre before being deleted.

Outgoing Message Type

This option is network dependent and can be used to specify the format of your outgoing messages. You can select from the following message types: Text (default), Fax, X400, Paging, E-Mail, ERMES or Voice.

Using The Phone Setup Menu

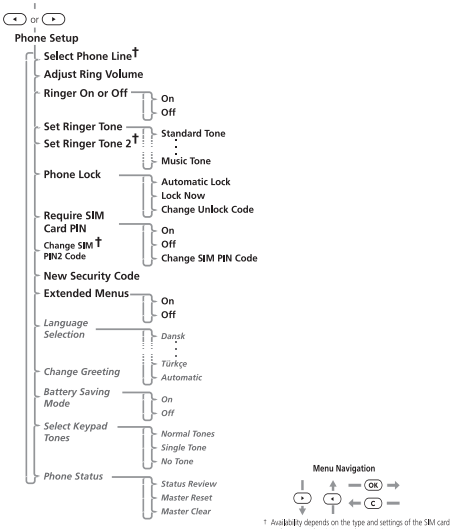

† Availability depends on the type and settings of the SIM card and/or your subscription to these services.

Select Phone Line

This option allows you to switch between `Line 1` and `Line 2`.

Adjust Ring Volume

Sets the incoming ring volume.

Ringer On or Off

Sets incoming call alert to either a ringer tone or a display message.

Set Ringer Tone

Sets your phone's ring tone on receipt of a call.

Set RingerTone 2

This option sets the tone your phone will make when an incoming call is received on Line 2.

Phone Lock

Used to lock your phone and to change the unlock code.

The code is a four digit number (set at manufacture to **1234**). You can change it at any time by using the 'Change Unlock Code' option.

Select `Automatic Lock` to lock your phone each time it is switched on.

Require SIM Card PIN

Set and changes the PIN code.

! Incorrect entry of the PIN code three times in succession will automatically lock up your SIM card and `Blocked` will be displayed.

Unblocking Your Phone. If you receive the `Blocked` message you will need to enter an unblock code and key sequence before you can use the phone.

☞ *The 8 digit PIN unblocking code will have been provided with your SIM card by your Cellular Service Provider.*

To unblock your phone enter:

(*) (*) (0+) (5JKL) (*) Unblock Code (OK) New Pin Code (OK) New Pin Code (OK)

The new PIN code must contain four to eight digits.

! If this operation is performed incorrectly ten times in a row, your SIM card will become permanently blocked.

Change SIM PIN2 Code

Changes your PIN2 security code.

! If the PIN2 security code is entered incorrectly three times in a row, the `Blocked` message will be displayed.

Unblocking Your Phone. If you receive the `Blocked` message, you will need to unblock and change the code before you can use the phone.

☞ *The 8-digit unblocking code will have been provided with your SIM card by your Cellular Service Provider.*

Availability of the SIM PIN2 Code is dependant on the SIM card in use.

(*) (*) (0+) (5JKL) (2ABC) (*) Unblock Code (OK) New Pin2 Code (OK) New Pin2 Code (OK)

! If the this operation is performed incorrectly ten times in a row, your PIN2 code will become permanently blocked

New Security Code

The Security Code is used to control access to security and other options within the menus.

This option is used to change the security code, which is set at manufacture to **000000**.

Extended Menus

Switches the extended menus `on` or `off`.

Language Selection

Changes language for display messages.

Change Greeting

Changes the message displayed when you switch on your phone. May not be available if pre-programmed by your Service Provider.

Battery Saving Mode

Helps to conserve battery power. Also known as DTX (Discontinuous Transmission), this feature causes your phone to use less power when you are in a call and not talking.

Select Keypad Tones

Allows you to change or disable audible tones on a key press.

Phone Status

Status Review

Used to view the current setting of menu options.

Master Reset

! Use this option with caution.

Restores certain phone options to their original settings.

When selected, you will be asked to enter the security code. This option will perform the following:

- Cancel Automatic Answer, Audible Call Timers, In-Call Display Meter, Battery Save (DTX), Automatic Handsfree, Automatic Lock and Cell Broadcast.
- Return Language Selection to Original.
- Restore Keypad Tones to Normal, Ringer Tones to Standard, Volume Level to Medium and Network Search frequency to Medium.
- Reset SMS messages expiry period to 24 hours and the Message Type to Text.

Master Clear

! Use this option with extreme caution

Used to restore certain phone options to their original settings.

After entering the security code it will perform the same operations as 'Master Reset', plus the following:

- Clear the Last Calls Made and Last Calls Received list
- Clear the Message Editor.
- Reset the Resettable Call Timers.

Master Clear does **not** clear the:

- Fixed Dial list
- My Number(s) list
- Charge Meters
- Received and Outgoing Messages list

Using The Network Selection Menu

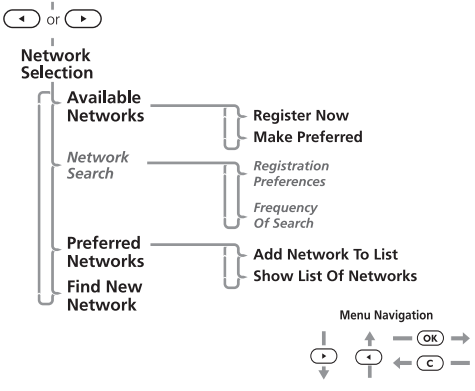

In order for the phone to make and receive calls it must be connected to a GSM900 network.

Available Networks

This option will scan to see which networks are operating in your current location. When the scan is complete, use the ◄ or ► key to scroll through the list. When you see a network you wish to register with or store in your preferred list, press the OK key.

Network Search

These options determine how often your phone tries to register with a network and how the attempt is made.

Fast and Continuous Search may use up a significant amount of battery power.

Preferred Networks

Add Network To List

Enables you to add networks to your preferred list.

Show List Of Networks

Used to display the networks you have stored in your preferred list. In addition, pressing the OK key will select the currently displayed entry and enter a move/delete sub-menu.

Find New Network

When selected, the phone will try to register with a network. If the attempt fails, your phone will then try to re-register with the previous network.

Using The Call Meters Menu

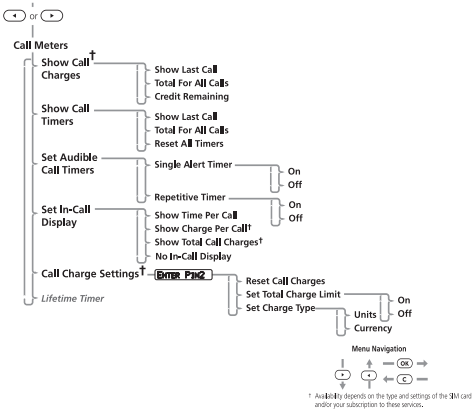

Show Call Charges

☞ *Only available if you receive the Advice of Charge service.*

Displays the cost of your calls or the amount of credit remaining. The figures are in phone units or currency depending on the setting of the `Set Charge Type` option.

Show Call Timers

This feature allows you to display the duration of your last call, all your calls since the time meter was reset to zero and resets your time meters to zero.

Set Audible Call Timers

There are two programmable audible call timers:

- The 'Single Alert Timer' will sound a beep just once during a call, after a preset time has elapsed.
- The 'Repetitive Timer' will sound regular beeps during a call, at preset intervals.

Both timers will sound their beeps ten seconds before the end of the programmed time.

Set In-Call Display

Allows you to specify whether the time or charge meters are displayed during a call. If you do not have the Advice of Charge service, then only the time meter is available.

Call Charge Settings

☞ *This menu item is only available if you receive the Advice of Charge service.*

Allows you to customise your Advice of Charge settings. You will be prompted to enter your PIN2 security code before you can access the options.

Lifetime Timer

Used to display the total time of all calls made on your phone.

This meter cannot be reset.

Accessory Setup

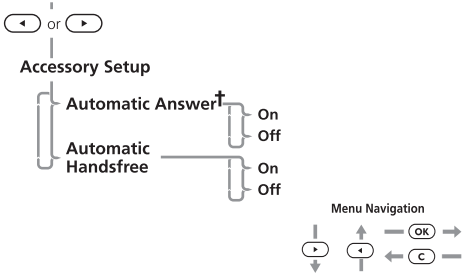

† This option will be displayed only when the headset accessory is attached.

You will only be able to access this menu when your phone is mounted in a car kit.

Automatic Answer

Allows your phone to automatically answer an incoming call after two rings.

Automatic Handsfree

If this feature is set to on, the phone will always receive incoming calls in handsfree mode. To toggle between handsfree and private while in a call press the ◄ or ► key and then OK.

Using the Quick Access Menu

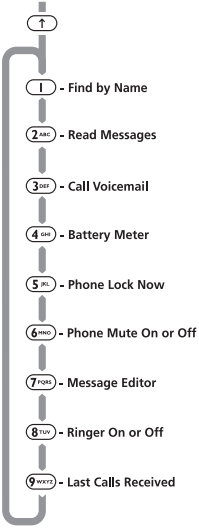

Menu Navigation

☞ *The menu shown above represents the default setting supplied with your phone.*

Although the features in your phone are available through easy access menus, some of the most commonly used features are also available in the Quick Access menu. Each feature in the menu is allocated a number from 1 to 9.

To use a Quick Access feature, press the quick access key (↑) followed by the number of the feature, or use the ◄ or ► key to scroll through the menu and then press OK.

Find by Name

You will be prompted to Enter Name. Enter the first three characters of the name and press OK. The first matching entry in the Phone Book will be displayed. Press OK to call the number.

Read Messages

Your newest message will be displayed; you can then read, delete and edit messages as normal. See 'Received Messages' for more information.

Call Voicemail

Your phone will make a call to your voicemail number.

☞ *You must have defined a Voicemail number in orderb to use this feature.*

See 'Call Voicemail' for more information.

Battery Meter

A bar graph indicating the approximate battery charge level will be displayed. The more bars displayed, the greater the charge level.

See ‘Show Battery Meter’ for more information.

Phone Lock Now

Immediately locks your phone, you will not be able to use your phone until the unlock code is entered. See ‘Phone Lock’ for more information.

Phone Mute On or Off

This option allows you to have a conversation without the person on the line being able to hear you.

Message Editor

The Message Editor is used to edit the currently selected message and then to either send the modified messageor store it in your Outgoing Messages list.

Ringer On or Off

This option allows you to turn off your phone’s ringer.

Last Calls Received

This optioncan be used to redial the phone number of any one of the last ten calls received.

☞ *You will only see numbers in the Last Ten Calls Received list if you have Caller Line Identification.*

Approved Accessories

The following accessories have been designed to work with your phone and are packaged separately. Additional accessories may be available. Please refer to your local service provider or retail outlet for more information.

Standard Travel Charger UK, SPN4364

Standard Travel Charger EURO, SPN4365

Belt Clip With AA Battery Door, SYN7167

Belt Clip With AAA Battery Door, SYN7168

AA Battery Support Kit, SLN3990

Rapid Travel Charger, SPN4366 (Requires an adaptor plug)

EURO Adaptor Plug, SYN4655

UK Adaptor Plug, SYN4656

US Adaptor Plug, SYN4657

India Adaptor Plug, SYN4696

Australia/NewZealand Adaptor Plug, SYN4694

Cigarette Lighter Adaptor, SYN5383

Headset with Adaptor in Pouch, SLN3983

Simple Hands Free Car Kit, S8267

Hands Free Car Kit, S8266

PC Cards

CELLect™ 1+, S6112

CELLect™ 3, CD1176

What to do if...

You can't switch your phone on	*Check the battery.* Is it charged, properly fitted and are the contacts clean and dry? See 'Important Battery Information'.
You can't make calls	*Check the antenna.* Is it fully extended? *Check the signal strength meter in the display.* If the signal is weak, move to an open space or, if you are in a building, move closer to a window. *Check the Network Selection settings.* Try Manual Selection, or try another network. See 'Network Search'. *Check your Operator coverage map*. *Is* `Restricted` *displayed?* Check the Call Barring and Fixed Dialling settings. *Has the call charge limit been reached?* Use your PIN2 code to reset the limit or contact your Service Provider. See 'Set Total Charge Limit'. *Has a new SIM card been inserted?* Check that no new restrictions have been imposed.
You can't receive calls	*Check the antenna.* Is it fully extended? *Check the signal strength meter in the display.* If the signal is weak, move to an open space or, if you are in a building, move closer to a window. *Check the Call Diversion and Call Barring settings.* *Check the Ringer settings*. If it is off, there is no audible alert. See 'Ringer On or Off'.
Your phone won't unlock	*Have you inserted a new SIM card?* Enter the new PIN code. See 'Entering Your SIM Card PIN Code'. *Do you have a replacement phone?* Enter the default phone unlock code - 1234. *Have you forgotten the unlock code?* Press ◄ or ► to change the unlock code (you will need your security code).
Your PIN is blocked	*Enter the PIN unblocking code supplied with your SIM card (see 'Unblocking Your Phone').*
Your PIN2 is blocked	*Enter the PIN2 unblocking code supplied with your SIM card (see 'Change SIM PIN2 Code').*
Your SIM card won't work	*Is the card inserted the right way round? See 'SIM Card Insertion'.* *Is the gold chip visibly damaged or scratched?* Return the card to your Service Provider. *Check the SIM contacts.* If they are dirty, clean them with an antistatic cloth.

The battery won't charge	*Check the charger*. Is it properly connected? Are its contacts clean and dry? See 'Your Battery'. *Check the battery contacts.* Are they clean and dry? *Check the battery temperature.* If it is warm, let it cool before recharging. *Is it an old battery?* Battery performance will decline after several years use. Replace the battery.
The battery drains faster than normal	*Are you in an area of variable coverage?* This uses extra battery power. *Is your antenna fully extended?* This helps use less battery power. *Is it a new battery?* A new battery will need two to three charge/discharge cycles to attain normal performance. See 'Charging a New Battery' *Is it an old battery?* Battery performance will decline after several years use. Replace the battery. *Is it a battery that hasn't been completely discharged?* Allow the battery to fully discharge (until the phone turns itself off) and then charge the battery overnight. *Check that the Frequency Of Search feature in the Network Selection menu has not been set to* `Fast` *or* `Continuous`. See 'Network Search'. *Check that the Battery Saving Mode feature has not been set to* `Off`. *Are you using your phone in extreme temperatures?* At extreme hot or cold temperatures, battery performance is significantly reduced.
You can't cancel Call Diverting or Call Barring	*Wait until you are in an area with good network coverage and try again.*
The ✉ symbol is flashing	*There is not enough memory available to store another SMS message.* Use the Messages menu to delete one or more existing messages.
I can't make international calls	*Some Service Providers automatically bar the ability to make international calls.* Contact your Service Provider. *Have you included the relevant codes?* Press and hold the 0+ key to display the international dialling prefix (+) and then enter the appropriate country code followed by the phone number.

Index

A

AA Batteries 13
Approved Accessories 45
Audible Call Timers 41
Automatic Answer 42
Automatic Handsfree 42
Automatic Redial 16
Available Networks 40

B

Battery 12
- Battery Cover Removal 12
- Battery Saving Mode 39
- Care and Storage 13
- Charging the Battery 13
- Charging your battery 12
- Disposal 13
- Installing the Battery 12
- Low Battery Warning 13
- Using 'AA' Batteries 13

Battery Meter 30
Battery Saving Mode 39

C

Call Barring 33
Call Charge Settings 41
Call Charges 41
Call diverting 44
Call Holding 32
Call Timers 41
Call Waiting 18, 32
Call waiting 20
Cancel all diverting 32, 44
Change Greeting 39
Characters 27
Conference Call 19
- End Active And Held 19
- Hold Call 18
- Make a New Call 18
- Reconnect 19
- Reconnect Held Call 19
- Restrict My Number 18
- Split Call 19
- Switch 19

D

Detailed diverting 32
Display 11
Display characters 27
Divert
- Cancelling 32
- Fax calls 32

E

Emergency Calls 16
Ending a Phone Call 17
Entering Information 2
Extended Menus 38

F

Fault finding 47
Find entry by name 43
Find new Network 40
Fixed Dialling 28
Fixed dialling
- Calling numbers 29

H

Hold Call 18

I

In use symbol 11
In-Call Display 41
International Phone Calls 16

K

Key Presses 2
Keypad Tones 39
Keys 11

L

Language Selection 38
Last Ten Calls 28
Lifetime Timer 41
Lock now 44
Locking the keypad 15
Low Battery Warning 13

M

Menu navigation 23
Menus 23
- Extended 23
- Personalised 23

Quick Access menu 43
Short 23
Messages
Call holding/call waiting messages .. 21
My Phone Number(s) 28

N

Networks
Find new Network 40
Network search 40
Networks Available 40
Preferred Networks 40

O

One-Touch Dial Setting 29
One-Touch Dialling 16
Other Symbols 2
Outgoing messages 43

P

Pauses 16
Personal Numbers 28
Phone Book
Access prevention 28
Add Entry 28
Capacity 28
Entering a name 27
Find entry by location 28
Finding entry by name 28
Last Ten Calls 28
Personal Numbers 28
Phone Book Numbers 16
Phone Lock 37
Phone Number restriction 30
Phone Status 39
Preferred Networks 40
Prompts and Messages 2

Q

Quick access menu 43

R

Redial 16
Redialling the Last Number Called 16
Restrict My Number 18
Ringer On or Off 37
Ringer Tone setting 37

S

Security Code 38
SIM Card 14
Insertion and Removal 14
SIM Card PIN Code 15
SIM Card PIN 38
SIM pin2 code 38
Split Call 19
Sub-Menus 23
Switch 19
Switching Your Phone On and Off 15

T

Total Customer Satisfaction 3
Transmission rate 33
Troubleshooting 47

U

Unlock Code 15

V

Voicemail 16

W

Warranty 3
What to do if... 47

68P09413A51
Printed in the EEC
Ⓜ and MOTOROLA are trademarks of Motorola. © MOTOROLA, 1997 all rights reserved.