Options Menu

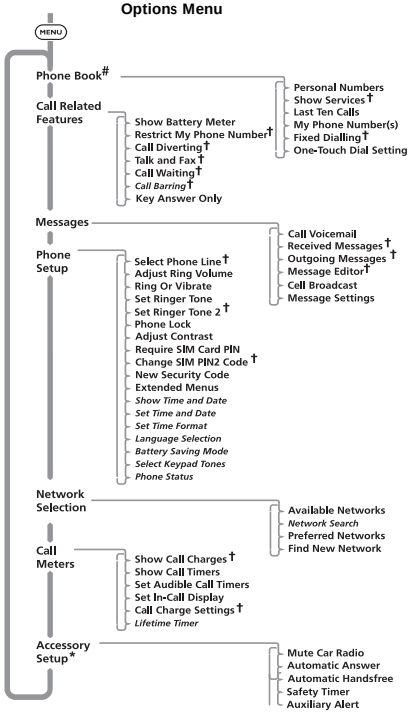

Quick Access Menu ‡

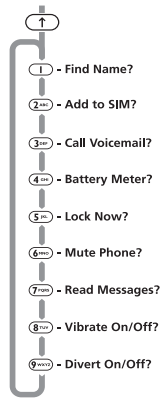

Menu Navigation

Items shown in ***Italics*** are available only when **Extended Menus** are switched on.

\# If your service provider has added their own menu, the Phone Book menu will not be the first item in the Options menu.

† Availability depends on the type and settings of the SIM card and/or your subscription to these services.

* The **Accessory Setup** option is available only when a car kit or headset accessory are fitted.

‡ The features and the positions of the features in the Quick Access menu can be changed.

Quick Reference

English

Quick Reference

English

Special Keys

⊙	Press to turn phone on and off.
OK	Press to accept call, setting, option,...
C	Press to reject call, setting, option,...
↑	Press to enter the Quick Access features.
MENU	Press to access the options or phone book menus.
◂✱ #▸	Press to select entries and menu options.
M+	Press to add a phone book entry.
✉	Press to call Voicemail.

Making a Call

Enter **Phone No.** OK.

Receiving a Call

Open the phone, or press OK, ◂✱ or #▸.

Ending a Call

Press OK, C or close the phone.

Making an Emergency Call

Enter 1 1 2ABC OK. The call will be directed to a central emergency operator.

Quick Access Features

Press ↑ followed by the appropriate key, or press ↑, scroll to the feature and press OK to select.

Redialling the Last Number Called

1. Press OK to display the last number dialled.
2. Press OK to call the number.

One-Touch Dialling

Press and hold the appropriate digit key 1 to 9WXYZ.

Storing Numbers in the Phone Book

1. Press M+ to access the Phone Book.
2. Press OK to select phone memory, or ◂✱ OK to select SIM card memory.
3. Enter **Phone No.** OK, then **Name** OK, then **Location** OK.

Dialling Phone Book Numbers

Enter **Location** #▸ OK.

Stopping a Call Alert

Press either of the volume buttons when the phone is ringing or vibrating. This will stop the alert but not answer the call.

Introduction

Welcome

Congratulations on your purchase of a phone from *Motorola*, the world leader in cellular technology. The phones are packed with features that put you in control and give you unrivalled power, whilst remaining discrete.

Control

- Customisable Quick Access Menu ↑ - *Place nine of your most frequently used features in your own personal menu so that they can be accessed with just two key presses. Icons make each feature easy to identify.*

Discretion

- VibraCall™ - *In locations where you don't want your phone to ring, or which are too noisy to hear your phone ring, your phone can vibrate to alert you of a call.*
- Wearable Holster - *Wear your phone in a stylish holster on your belt. It is small enough and light enough to keep with you almost anywhere.*
- Stop Call Alert - *Press either of the volume buttons when the phone is ringing or vibrating. This will stop the alert but not answer the call.*

Power

- Superb battery performance - *Each phone is capable of several hours conversation or several days standby, but is still small and light.*
- Dual Band - *versions of the phone include the powerful dual band feature which means that they can use both 900 and 1800 MHz bands for greater call success and allow wider roaming opportunities.*

Before you use your phone, please see the 'Your Battery' section for important information on charging a new battery.

Personality™

This cellular telephone incorporates *Personality*™. Unique to *Motorola*, *Personality*™ removes the complexity of cellular communications by guiding you through the features and presenting you with simple choices every step of the way. *Personality*™ also allows you to personalise the way you use your phone - for example, different ringer tones, a phone book and network selection preferences - all presented with clarity and simplicity. In this manual, each of the *Personality*™ features is identified with an OK symbol to indicate that it is customisable to meet your requirements.

Understanding this Manual

Many of your phone options are accessed by a simple menu system. A full description of the menus and how to move around them is covered in the next section ***Menu Navigation***. When the manual describes the use of each menu item, it will be assumed that you are familiar with the menu system.

Key Presses

Key presses are represented in this manual using symbols so that you may locate and use the required sequence quickly. A sequence of key presses may be shown as follows:

(MENU) (OK) (C)

This means that you should press the (MENU) key followed by the (OK) key and then the (C) key, in sequence, not simultaneously.

Entering Information

When you are requested to enter information, such as the number of the phone you wish to call, this is represented in **bold** type. For example:

Phone No. - enter the required telephone number.

PIN Code - enter your Personal Identification Number.

Unlock Code - enter your unlock code.

Location - enter the Phone Book location number.

Prompts and Messages

Your phone responds to key presses by displaying either easy to understand prompts that guide you to the next action, or simple messages confirming that your action is complete. Prompts and messages are represented in this manual in LCD style, for example:

`Enter PIN` or `Completed`.

Other Symbols

You will find the following symbols used throughout this manual:

A Note contains additional information which is relevant to the feature/item.

A Caution contains important additional information which is relevant to the efficient and/or safe usage of your phone.

OK This symbol indicates that the feature is a *Personality*™ feature that can be customised to meet your requirements.

This symbol indicates a short key sequence for the feature.

Menu Navigation

A large number of your phone's options are accessed by using menus which use a common approach for selection, change and cancellation.

Please read this section carefully before attempting to access a menu option. When you understand the common approach to menu navigation and how the menus are shown on the page, you will be able to access and change options with ease.

Entering the Menus

Two different keys (three on flip phones) are used to access the menus:

MENU	enters the Options menu whilst in standby mode; enters the In-call menu during a call.
↑	enters the Quick Access menu.

Once entered, the menus use the MENU, ◄✱, #►, OK and C keys in a common manner to access, select and change individual options.

Leaving the Menus

To leave any of the menus, you can either press and hold the C key or repeatedly press the C key. Both of these actions will return your phone to the standby mode.

Alternatively, a quicker way to leave the menus is to press ↑C.

Menus and Sub-menus

A menu is a simple list of options. Some of these options provide access to a further list of options called a sub-menu. When navigating through the menus you may find it is helpful to think in terms of menu levels - the 'parent' menu being on one level and its sub-menus being on a lower level.

Moving To and Selecting a Menu Option

To move from one option to another on the same level, use the scroll keys: the #► key scrolls forwards and the ◄✱ key scrolls backwards. When you find the option you want, press the OK key to select it.

Depending on the option you select, one of three things will happen:

- either a brief message will be displayed confirming an action, for example `Completed`.
- or a prompt will be displayed requesting you to enter information, for example `Enter PIN` or `Enter Name`.
- or the first option of a sub-menu will be displayed. You can select this option using the OK key or browse through the other options using the scroll keys.

To leave an option or sub-menu, press the C key. This will take you back to the parent menu item.

Menu Options with Security Codes

Some options are protected from misuse by requiring you to entry one of the security codes. To use these options, you must enter the requested code before proceeding.

OK Short, Extended and Personalised Menus

With *Personality*™ you can personalise the menus by choosing which features you want readily available. The features that are less frequently used can be stored out of sight.

The menu diagrams in this manual show the condition of the menu settings when you first receive your phone. Some features are in the Short Menu and are shown in **bold** type. Other features are in the Extended Menu and appear in *italics*.

You can change which features appear in the Short and Extended Menus, and therefore personalise the menus, to suit your requirements.

If you want to move a feature from the Short Menu to the Extended Menu (or from the Extended Menu to the Short Menu), go to the feature and then hold down the (OK) key until a prompt appears offering the following choices:

- Add the current feature to the Short Menu/Extended Menu.
- Leave the current feature in the Short/Extended Menu.

Select the option you want by pressing the (OK) key.

The settings for some menu features cannot be changed.

Total Customer Satisfaction

At Motorola, Total Customer Satisfaction is a top priority. If you have a question, a suggestion or a concern about your Motorola Cellular Phone, Motorola wants to hear from you.

Please contact the Motorola Cellular Response Centre by fax on: +44 (0) 131 458 6732, or use one of the local phone numbers in the following countries:

Austria	0660 7246
Belgium	0800 72 370
Denmark	43 43 15 56
Egypt	02 3411800
Eire	01 402 6887
Finland	0800 117 036
France	0 803 303 302
Germany	0180 35050
Greece	00800 441 28150
Italy	02 696 333 16
Jordan	06 863750
Kuwait	484 2000 Ext 1177
Lebanon	01 744156
Luxembourg	0800 21 99
Netherlands	0800 022 27 43
Norway	22 55 10 04
Oman	790925
Portugal	01 318 0051
Qatar	418999
Saudi Arabia	01 2303294
South Africa	0800 11 48 49
Spain	902 100 077
Sweden	08 445 1210
Switzerland	0800 553 109
Turkey	0212 2729090
UK	0500 55 55 55
United Arab Emirates	04 32 11 66

For e- mail queries contact: mcrc@ ei. csg. mot. com

For Internet queries contact: http:// www. mot. com

Motorola's Warranty

Your Cellular Phone is warranted by Motorola to be of satisfactory quality, fit for its purpose and comply with applicable Motorola specifications for a period of twelve (12) months from the date you bought it (verified by reference to your proof of purchase).

This warranty does not apply if the phone has:

1. been mishandled, misused, wilfully damaged, neglected, improperly tested, repaired, altered or defaced in any way.
2. a defect arising as a result of any failure to follow instructions either in the manual or product specification.
3. a defect which has arisen from the use of non-Motorola approved accessories or ancillary items attached to or in connection with the telephone.

This warranty does not affect your statutory rights as a consumer.

Warranty conditions may vary depending on the country in which you bought the phone.

Contents

Safety
Important information for the efficient and safe operation of your phone 9

About Your Phone, Battery and SIM Card
Introduces your phone, explains how to charge and maintain batteries, explains about your SIM Card 13

Making and Receiving Phone Calls
Explains how to make single or conference calls, how to redial, how to transfer a call, and how to end a call 21

Using The Options Menu
Provides an explanation of the Options Menu and how to use it 31

Using the Quick Access Menu
Provides an explanation of the Quick Access Menu and how to use it 67

Accessories
Details the accessories available for use with your phone 71

What To Do If...
Helps you to solve any problems that may occur 73

Index
A comprehensive Index 75

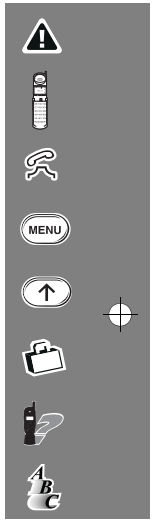

The Manufacturer reserves the right to make changes in technical and product specifications without prior notice.

Safety

IMPORTANT

For the efficient and safe operation of your wireless handheld portable telephone, observe these guidelines.

Exposure To Radio Frequency Signals

Your wireless handheld portable telephone is a low power radio transmitter and receiver. When it is ON, it receives and also sends out radio frequency (RF) signals.

European and International agencies have set standards and recommendations for the protection of public exposure to RF electromagnetic energy.

- International Commission on Non-Ionizing Radiation Protection (ICNIRP) 1996
- Verband Deutscher Elektringenieure (VDE) DIN-0848
- Directives of the European Community, Directorate General V in Matters of Radio Frequency Electromagnetic Energy
- National Radiological Protection Board of the United Kingdom, GS 11, 1988
- American National Standards Institute (ANSI) IEEE.C95.1-1992
- National Council on Radiation Protection and Measurements (NCRP). Report 86
- Department of Health and Welfare Canada. Safety Code 6

These standards are based on extensive scientific review. For example, over 120 scientists, engineers and physicians from universities, government health agencies and industry reviewed the available body of research to develop the updated ANSI Standard.

The design of your phone complies with these standards when used normally.

Antenna Care

Use only the supplied or approved replacement antenna. Unauthorised antennas, modifications or attachments could damage the phone and may violate FCC regulations.

Phone Operation

Normal Position: Hold the phone as you would any other telephone with the antenna pointed up and over your shoulder.

Tips on Efficient Operation: For your phone to operate most efficiently:

- Extend your antenna fully (if applicable).
- Do not touch the antenna unnecessarily when the phone is in use. Contact with the antenna affects call quality and may cause the phone to operate at a higher power level than otherwise needed.

Batteries

All batteries can cause property damage, injury or burns if a conductive material such as jewellery, keys or beaded chains touches exposed terminals. The material may complete an electrical circuit and become quite hot. To protect against such unwanted current drain, exercise care in handling any charged battery, particularly when placing it inside your pocket, purse or other container with metal objects. When the battery is detached from the phone, your batteries are packed with a protective battery cover; please use this cover for storing your batteries when not in use.

Driving

Check the laws and regulations on the use of wireless telephones in the areas where you drive. Always obey them. Also, if using your phone while driving, please:

- give full attention to driving - driving safely is your first responsibility
- use hands-free operation, if available
- pull off the road and park before making or answering a call if driving conditions so require.

Electronic Devices

Most modern electronic equipment is shielded from RF signals. However, certain electronic equipment may not be shielded against the RF signals from your wireless phone.

Pacemakers

The Health Industry Manufacturers Association recommends that a minimum separation of six (6”) inches be maintained between a handheld wireless phone and a pacemaker to avoid potential interference with the pacemaker. These recommendations are consistent with the independent research by and recommendations of Wireless Technology Research.

Persons with pacemakers:

- Should **ALWAYS** keep the phone more than six inches from their pacemaker when the phone is turned on.
- Should not carry the phone in a breast pocket.
- Should use the ear opposite the pacemaker to minimise the potential for interference.

If you have any reason to suspect that interference is taking place, turn your phone **OFF** immediately.

Hearing Aids

Some digital wireless phones may interfere with some hearing aids. In the event of such interference you may want to consult your hearing aid manufacturer to discuss alternatives.

Other Medical Devices

If you use any other personal medical device, consult the manufacturer of your device to determine if they are adequately shielded from external RF energy. Your physician may be able to assist you in obtaining this information.

Turn your phone **OFF** in health care facilities when any regulations posted in these areas instruct you to do so. Hospitals or health care facilities may be using equipment that could be sensitive to external RF energy.

Vehicles

RF signals may affect improperly installed or inadequately shielded electronic systems in motor vehicles. Check with the manufacturer or its representative regarding your vehicle. You should also consult the manufacturer of any equipment that has been added to your vehicle.

Posted Facilities

Turn your phone **OFF** in any facility where posted notices so require.

Aircraft

FCC regulations prohibit using your phone while in the air. Switch **OFF** your phone before boarding an aircraft.

Blasting Areas

To avoid interfering with blasting operations, turn your phone **OFF** when in a "blasting area" or in areas posted: "turn off two-way radio". Obey all signs and instructions.

Potentially Explosive Atmospheres

Turn your phone **OFF** when in any area with a potentially explosive atmosphere and obey all signs and instructions. Sparks in such areas could cause an explosion or fire resulting in bodily injury or even death.

Areas with a potentially explosive atmosphere are often, but not always, clearly marked. They include fuelling areas such as petrol stations; below decks on boats; fuel or chemical transfer or storage facilities; vehicles using liquefied petroleum gas (such as propane or butane); areas where the air contains chemicals or particles, such as grain, dust, or metal powders; and any other area where you would normally be advised to turn off your vehicle engine.

For Vehicles Equipped with an Air Bag

An air bag inflates with great force. **DO NOT** place objects, including both installed or portable wireless equipment, in the area over the air bag or in the air bag deployment area. If in-vehicle wireless equipment is improperly installed and the air bag inflates, serious injury could result.

European Union Directives Conformance Statement

This product is in conformance with the requirements of the applicable EU Council Directives.

Declarations of Conformance with the requirements are located at:

Motorola Ltd.
European Cellular Subscriber Division
Midpoint, Alençon Link
Basingstoke, Hampshire RG21 7PL
United Kingdom

APPROVED for connection to telecommunications systems specified in the instructions for use subject to the conditions set out in them.

S/1357/4/V/503894

About Your Phone, Battery and SIM Card

Special Keys

⊙	Turns the phone on and off.
OK	Accept call, setting, option.
C	Reject call, setting, option.
↑	Enter the Quick Access menu.
MENU	Press to access the Options and Phone Book menus.
◄✱ #►	Press to select entries and menu options .
M+	Press to add a phone book entry.
✉	Press to call Voicemail.

The Smart Button

The Smart button (◈) is on the left hand side of your phone in-between the two volume keys. Press it to quickly access all your Phone Book entries, and then either scroll through the entries using the volume buttons or press one of the alphanumeric keys to search for a specific name - for example, press 7 to search for the name *Pam*, or press 7 four times to search for the name *Sam*.

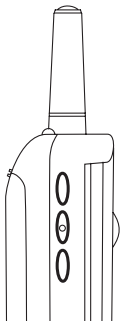

If a Phone Book entry does not have a name, it will not be displayed.

If you are using the optional headset, you can also use the Smart button to make, answer and end calls as follows:

- To answer a call, press ◈ for 1.5 seconds.
- To end a call, press ◈ for 1.5 seconds and then quickly press ◈ again.
- To make a call, enter or recall a number and then press and hold ◈ for 1.5 seconds.

Volume Buttons

The Volume buttons are on the left-hand side of your phone, above and below the Smart button. The buttons are used for adjusting the keypad, earpiece and ringer volume. A volume meter will display the current volume setting. The meter will disappear after a short time, or if you press OK or C.

- To adjust the keypad and earpiece volume, press the buttons with no other features selected.
- To adjust the ringer volume, first select the 'Adjust Ring Volume' option in the Phone Setup Menu and then use the buttons to set the required volume.

The volume buttons can also be used to scroll though the Phone Book entries after pressing the Smart button.

If you receive a call and you do not want to answer it immediately, you can press either of the volume buttons to stop the phone from ringing or vibrating. This will not answer the call.

Mute Button

The Mute button is located on the top of the phone, next to the antenna. Press it to mute the phone during a call.

The Display

The display on your phone can show alphanumeric characters as well as useful information symbols.The various elements of the display are as follows:

ABC123	Characters are used to display messages and telephone numbers.
	Signal Strength. The more segments displayed in the bar graph, the better the signal strength.
	In Use. Displayed when a call is in progress.
	Roam. Displayed when you are registered on a system other than your home system.
	Home Zone. Availability depends on your service provider.
	Short Message Service. Displayed when the phone has received a message. The symbol will flash when your message storage area is full.
	Voicemail Waiting Indicator. Displayed when you have a voice message waiting. The availability of this feature depends on your service provider.
	Ringer On. Displayed when the call ringer is selected. If you select the No Ring or Vibrate or the Vibrate Only options this symbol will not be displayed.
	Battery Charge Indicator. The more segments displayed, the greater the battery charge.
	Icons are displayed when you are in the Quick Access menu.
	A scroll bar will appear on the right of the display when you are in a list/menu. The button on the scroll bar indicates where you are in the list.
✓	Indicates that a menu item is currently selected.
12:00	**Real Time Clock.** The real time clock can display the time in either a 12-hour or 24-hour format.

In addition, when you are expected to press the OK key, a prompt will appear in the display, for example Completed.

Low Temperature Use

The liquid crystal display used in your phone will behave differently at extremely low temperatures. You may notice that the display responds slowly to key presses; this is to be expected and does not affect the phone operation in any way.

Looking After Your Phone

- Never leave your phone or battery in extreme temperatures (over 60°C), for example behind glass in very hot, direct sunlight.
- To clean your phone, use a moistened or antistatic cloth. Do **not** use a dry or electrostatically charged cloth.

The Status Indicator

The status indicator on the top of the phone provides you with the following information:

Incoming Call	Alternate Red/Green
In Service	Flashing Green
No Service	Flashing Red
Roaming	Flashing Yellow

Your Battery

Charging a New Battery

New batteries are supplied in a totally uncharged state.

To ensure maximum battery performance, a new battery (or battery that has not been used for several months) should be charged for at least 14 hours before use.

A new battery will require several full charge/discharge cycles in order to achieve its optimum performance.

A new battery, or a battery that has not been used for several months, may cause a premature fully charged indication. Ignore this indication and let the battery charge for several more hours, remove and re-insert the battery into the charger, and charge for an additional 14 hours.

Important Battery Information

Always treat your batteries with care. See 'Batteries', at the beginning of this manual.

Never leave your battery in extremely high temperatures (over 60°C), for example behind glass in very hot, direct sunlight.

Only Motorola Original Accessory batteries can be charged in the phone or the optional desktop charger. This is to protect you and your phone from the risks of incorrect charging.

Do not use lithium ion batteries at extremely low temperatures as the maximum standby/talk time will not be available when cold.

To ensure that you enjoy maximum battery life and use your battery to its fullest capacity:

- The battery should be at or near room temperature when charging.

Battery Performance and Maintenance

- Best battery performance will be achieved when you regularly charge and discharge batteries as instructed in this manual.
- Battery performance is greatly affected by network coverage.
- Set `Battery Saving Mode` to On (see 'Phone Setup Menu') and/or `Frequency of Search` to Slow or Medium (see 'Network Selection Menu').
- If left unused, a fully charged battery will discharge itself in approximately one month.
- When not in use, store your battery uncharged in a cool, dark and dry place.

Low Battery Warning

When the battery level is low and only a few minutes of talk time remain, a warning signal (two double beeps) will sound, the border of the battery symbol will begin to flash, and `Low Battery` will be displayed.

When the battery is completely discharged, your phone will turn off.

Removing Your Battery

! *Switch off your phone before removing the battery. Failure to do so may damage your phone memory.*

1. Press the release catch on the battery compartment and lift off the cover.
2. Push the battery towards the top of the phone and lift the battery out from the bottom end.

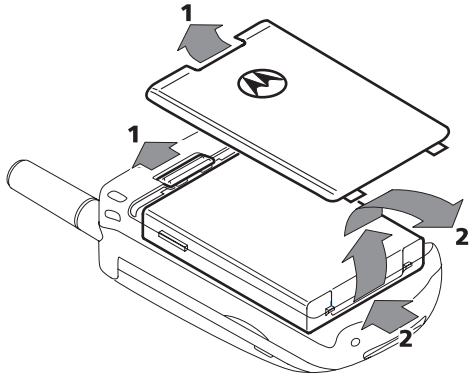

Fitting Your Battery

1 Remove the battery compartment cover.

2 Align the connections on the battery with the connections on the phone.

3 Press the battery towards the connections and push it downwards until it clicks into place. Replace the cover.

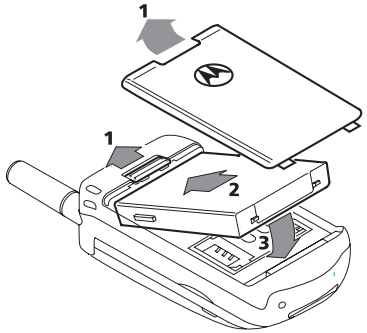

Charging Your Battery Using the Travel Charger

The travel charger can power the phone and charge a fitted battery.

Ensure that the local mains voltage at your location matches that of your travel charger.

Fit a battery onto your phone.

To charge your battery:

1 Attach the correct adapter plug to the travel charger.

2 Connect the travel charger to the phone.

The connector is keyed and can only be inserted one way.

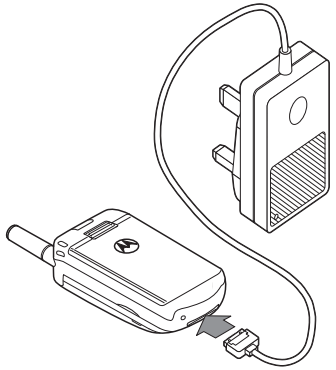

3 Insert the travel charger plug into a suitable mains power socket.

A beep-tone is heard and the battery icon flashes when charging begins.

Your phone can be either on or off during charging.

The state of charging is monitored and displayed by your phone. See 'Battery Meter Indicators' later in this section for details.

Desktop Charging Your Battery

The Desktop Charger is an optional accessory that allows you to charge both the battery fitted in your phone and a spare battery at the same time.

Batteries charge in about 2 to 3 hours, depending on the battery.

It is normal for batteries to become warm during charging.

1 Connect the travel charger to the desktop charger socket. (The connector is keyed and can only be inserted one way.)

2 Plug the travel charger into a standard mains socket.

3 Insert your phone into the desktop charger as shown.

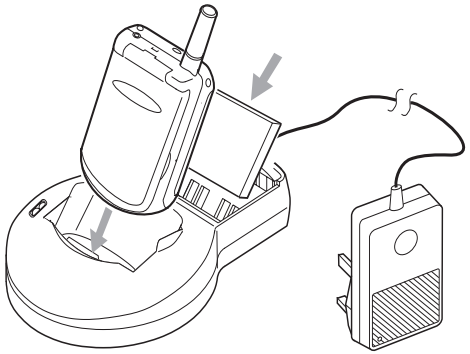

A spare battery can be charged on its own or at the same time as your phone. Insert the battery into the desktop charger as shown.

For maximum NiMH battery charging, you should double the charge time.

Charge times will increase if you make or receive phone calls while charging.

Battery Indicators

Your Motorola cellular phone includes the Motorola Expert Performance (€·P+) charging system. This enables the charging circuits in both the phone and the optional (€·P+) desktop charger to communicate directly with the battery. Based on this communication, the charger can implement the optimum charging cycle for best performance and determine the level of charge.

Your phone monitors and displays information about your battery. The following message will appear on the display, as the condition occurs:

Low Battery	The battery charge is low. The battery should be recharged.
Insert Battery	No battery fitted; external power connected
Invalid Battery	This message is accompanied by a single beep. Your phone is alerting you that you do not have charging capabilities with this battery even though the battery may be able to power the phone. The most likely reason why your charging system does not recognise the battery is that the battery you have purchased is not a Motorola original battery and therefore does not have the communications technology built into it. All Motorola original batteries include this communications technology. It is recommended that you use only Motorola original batteries, chargers and other accessories.

Battery Meter Indicators

The battery meter displays different messages depending on the batteries attached, and whether or not there is an external power source. The battery meter is found in the Call Related Features part of the Options Menu.

Charging Battery	The battery is being charged.
Fast Charge Complete	Fast charging is complete.
Invalid Battery	Battery may be defective, or may not be a Motorola original battery.

Your SIM Card

Your SIM (Subscriber Identity Module) card was supplied by your Cellular Service Provider when you bought your phone. You will not be able to make or receive calls if you do not have a SIM card inserted in your phone.

Some networks allow you to make emergency calls without a SIM card inserted.

The SIM card is a 'Smart Card' that contains your phone number, service details and memory for storing Phone Book numbers and messages. You can therefore use your SIM card in someone else's GSM phone and you will be charged for the call.

Like a bank or credit card, you should keep your SIM card secure. Do not bend or scratch your card and avoid exposure to static electricity or water.

Switch off your phone before inserting or removing the SIM card. Failure to do so may damage the memory on your SIM card.

SIM Card Insertion/Removal

1. Switch off your phone by pressing and holding the key, remove the battery cover and the battery.
2. Slide the SIM holder towards the right and lift up the left side of the holder.
3. Remove the SIM card from the holder if necessary.
4. Insert the SIM card into the holder as shown. The SIM card should be inserted with the notch at the top and facing towards the base of the phone.

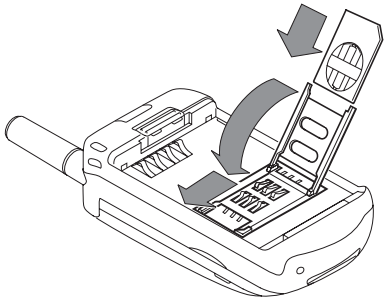

5. Replace the holder and press and slide it to the left to lock it into place.
6. Replace the battery and battery cover.

If the SIM card is inserted the wrong way round, or damaged, the `Check Card` message may be displayed. Remove the SIM card, check that it is the right way round and then re-insert it into the phone.

If either of the `Bad Card See Supplier` or `Blocked See Supplier` messages are displayed, then you will need to contact your Cellular Service Provider.

Making and Receiving Phone Calls

Switching the Phone On and Off

To switch the phone on or off, press and hold the (⊙) key. If VibraCall™ is selected, the phone will vibrate when it is switched on.

If you switch the phone on and there is no SIM card inserted, you will be asked to insert one. Once inserted, the phone will check that the SIM card is valid.

A number of messages will then be displayed:

- Enter PIN - a request to enter the SIM card PIN code (if required).
- Enter Phone Unlock Code - a request to enter the phone unlock code (if required).
- Searching... followed by a network name - as the phone searches and then finds a suitable network to connect to.

Entering Your SIM Card PIN Code

To enter the PIN code, enter [PIN Code] (OK).

As you type in each digit of the PIN code a * character will be displayed.

If you make a mistake, press and release the (C) key to remove the last digit. Holding the (C) key down will remove the entire entry.

When the PIN code is complete press the (OK) key.

If the PIN code entered is incorrect, the warning message Wrong PIN will be displayed, followed by Enter PIN.

! If the PIN number is entered incorrectly three times in a row, your phone will automatically lock-up and the Blocked message will be displayed. See 'Unblocking Your Phone' for details on unblocking your phone.

The PIN code can be changed, see 'Change SIM PIN Code' in the ***Phone Setup Menu*** section for more details.

OK Entering Your Unlock Code

If your phone displays the message Enter Phone Unlock Code you must enter your unlocking code by entering [Unlock Code] (OK).

The unlock code is a four digit number which is set at manufacture to **1234**. The code can be changed, see 'Change Unlock Code' in the ***Phone Setup Menu*** section for more details.

If you forget your unlock code, press the (MENU) key. This will display the 'Change Unlock Code' option. Enter (OK) [Security Code], enter a new unlock code, and press (OK).

Making a Phone Call

To make a phone call, your phone must be switched on and unlocked.

It will not be possible to make a phone call unless you are in an area where there is a GSM900 or GSM1800 service. When a service has been found, a series of rising bars, ▂▃▄▅▆, will show the signal strength.

There are a number of different ways to make a phone call:

- Using the digit keys.
- Using automatic redial.
- Redialling the last number called.
- One-touch dialling a Phone Book entry*.
- Dialling a Phone Book entry*.
- Calling an embedded number in a message.
- Using the Smart button (◉).

☞ **Your phone contains a 'phone book' that can be used to store names and telephone numbers. See 'What is the Phone Book?' for further details.*

The simplest method of making a phone call is to enter the number using the digit keys then press (OK).

☞ *If you make a mistake, press and release the (C) key to remove the last digit. Holding the (C) key down will remove the entire number.*

Your phone will then attempt to make the phone call. The display will show `Calling` to show the call attempt is being made. If the call is not answered, pressing (OK), or closing the flip (models with flip only), at this point will end the attempt.

When the phone call is answered, the display will change to `Connected` for a few seconds, followed by `End Call?`.

To end your call press (OK), or close the phone.

Automatic Redial

If your call attempt does not succeed, the message `Redial?` will be displayed for five seconds. Pressing (OK) at this point will automatically redial the phone number.

When the call is answered, you will hear a short ring tone.

The maximum number of redial attempts is set by your Cellular Service Provider. If the phone call cannot be connected within this maximum, the message `Redial Failed` will be shown.

Redialling the Last Number Called

When in standby mode, press (OK)(OK).

Alternatively, you can retrieve the last number dialled using the 'Last Ten Calls' feature in the Phone Book menu.

One-Touch Dialling Phone Book Numbers

To quickly retrieve and dial a number stored in the first nine locations of your Phone Book[1], press and hold the appropriate digit key. For example, pressing and holding (2abc) will dial the phone number stored in location 2 of your Phone Book.

You do not need to press (OK) to call the number.

Dialling Phone Book Numbers

Press the Smart button (◉) and use the volume buttons to scroll to the stored number, or press the appropriate digit key to skip to a particular letter. To make the call, either hold down ◉ for 1.5 seconds or press (OK).

Alternatively, enter the phone book **location** number followed by (#▸)(OK).

Calling an Embedded Number in a Message

Details on how to call a number embedded in a message are given in the ***Messages Menu*** section.

1. *The Phone Book entries that you are able to access will depend on the One-Touch Dial Setting option in the Phone Book menu.*

International Phone Calls

To make an international phone call press and hold the (0+) key. After a couple of seconds the international dialling prefix + will appear in the display, this allows you to call from any country without knowing the local international access code.

Now enter the country code, followed by the phone number. The country code follows the conventional format, 49 for Germany, 44 for the UK, 46 for Sweden, etc.

Just like a conventional international call, remove the leading '0' of the area code when you dial.

Inserting Pauses Into Phone Numbers

To obtain a three second 'pause' character in a phone number, press and hold the (*) key for a couple of seconds, the pause symbol ¤ will appear.

The pause character produces a three second delay whenever it is used. However, the first pause character in a phone number is a special case, it will not begin its delay until the call is answered.

Pause - A Working Example.

If, for example, you have a tone-based voicemail system on 555-6911, with a mailbox number 1066 and password 2001. Then you may dial the following number:

5556911¤1066¤2001 (OK).

The first part of the number would be used to call the voicemail system.

When the call is answered the first pause will produce a delay of three seconds before the tones for 1066 are sent to select the mailbox.

There will be a second pause of three seconds before the tones for 2001 are sent as the password.

GSM Emergency Calls

The world-wide GSM standard provides a single, uniform number, 112, to dial in cases of emergency.

Provided that your phone has found a network, you will be able to make an emergency call. The call can be made regardless of any security codes and, depending on the network, with or without a SIM card inserted.

The emergency call will be directed to a central emergency operator.

To dial the GSM emergency number, press 1 1 2 OK.

While the emergency call is being made and connected, the display will show Emergency Calling.

Emergency calls can be made without a battery fitted if the phone is powered by the travel charger.

Receiving a Phone Call

To receive a phone call:

- Your phone must be switched on and unlocked.
- You must be in an area where there is GSM 900/1800 service.
- Your Call Diversion and Call Barring settings should not be set to divert or bar incoming calls.

When your phone receives a call, it will ring or vibrate and the display will show the Call message (if you have Caller Line Identification, the caller's number or name will be displayed instead).

Normally, the call is answered as soon as the phone is opened. However, if the Key Answer Only option is selected, opening the phone will *not* answer the call - you will have to press a key.

When the identification is displayed, you can decide whether or not to answer the call by pressing OK, a numeric key (1 to 9), * or #. To set this option, see 'Key Answer Only'. You can also answer using the keys if the phone rings whilst the phone is already open.

If your phone is open and you do not want to answer the call, you can:

Press and release the C key. If you have enabled the 'Detailed Diverting - If Busy' or 'Divert when unavailable' options in the Options Menu, the caller will be diverted to the forwarding number, otherwise the caller will hear the busy tone.

or

Press and hold the C key. This will reject the incoming call. No call divert option will be offered.

If your phone rings and you do not answer it, the message `Unanswered Call` will be displayed to show you that a call attempt was received.

Ending a Phone Call

To end a phone call, press (OK), (C) or close phone.

In-Call Menu

The "In-Call" menu provides access to additional functionality during a call.

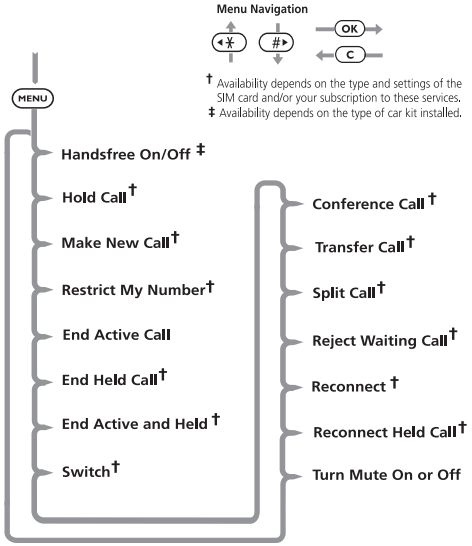

Entering the In-Call Menu

The "In-Call" menu is accessed by pressing the MENU key during a call.

Leaving the In-Call Menu

To leave the "In-Call" menu press the C key.

In-Call Menu Options

The options listed in the "In-Call" menu will dynamically change depending on the current call state. The following list contains all of the possible options in the "In-Call" menu.

Only some of the options will appear at any given time. The order of the options may vary.

Handsfree On/Off

This option is used to switch between Handsfree and normal operation if the phone is installed in a car kit that does not have an automatic presence detector.

Hold Call

This option will put the active call on hold.

Make a New Call

This option allows you to make another call.

Restrict My Number

This option allows you to make a call without the remote user getting advanced warning of the number.

End Active Call

This option terminates the active call, and makes the call that was previously on hold, the active call.

End Held Call

This option will terminate a held call.

End Active And Held

This option will terminate all connected calls.

Switch

This option allows you to switch between the active call and the call that is on hold.

Conference Call

This option connects you with up to five other telephones on one call (see 'Making a Conference Call').

Transfer Call

This option transfers a call to another telephone (see 'Transfer Call' later in this section).

Split Call

This option allows you to separate an individual from the main Conference Call.

Reject Waiting Call

This option will reject a waiting call.

Reconnect

This option will make the call on hold the active call.

Reconnect Held Call

This option is similar to `Reconnect` but will appear if you have a call on hold, and a call waiting. `Reconnect Held Call` will make the call on hold the active call.

Turn Mute On or Off

Temporarily turns the microphone off during a phone call. Reselect this option to resume your conversation.

OK *Call Holding and Call Waiting*

Your phone supports the GSM options of Call Holding and Call Waiting. Using these options you can place a current phone call on hold and accept an incoming call or start a second call (See '***Call Waiting***' in the '***Call Related Features***' menu for details of how to control this feature).

Call Holding and Call Waiting Scenarios

The display will automatically change according to the status of your current call (or calls) and will propose the option that you are most likely to want. Press (OK) to accept this option or press (MENU) to scroll through the "In-Call" menu for the alternative options. By following this procedure you will find that even the triple combination of an active call, a held call, and a call waiting is easy to manage.

The following points summarise the more common situations:

- To put an active call on hold, press (MENU) , the display will show `Hold Call Select?` - press (OK) to put the call on hold. To reconnect the call, press (OK).
- To put an active call on hold and make another call, first put the active call on hold, then press (MENU) and select the `Make New Call` option[1].
- To switch between an active call and a held call press (OK) at the `Two Calls Switch?` prompt.

1. *A quicker method of making another call is to enter the number to be called directly and press (OK). Your phone will place the current call on hold and attempt to call the number entered.*

- To accept a waiting call during an active call, press (OK) at the `Call Waiting Answer?` prompt. The active call will be placed on hold. If you prefer to end the active call before accepting the waiting call, press (MENU) and select the `End Active Call` option.
- To reject a waiting call, press (MENU) and select the `Reject Call Waiting` option (or simply press the (C) key).

If you have an active call, a call on hold and a call waiting, you cannot accept the waiting call until you end either the active call or the held call, or join the active and held calls.

Call Holding and Call Waiting Messages

During Call Holding and/or Call Waiting operations, your phone may display one or more of the following messages:

`Trying`

A request to hold the active call, swap the active with a held call, or add a member to a Conference Call, has been made.

or

A request to reconnect the held call has been made.

`Hold Failed`

The request to hold a call has been unsuccessful.

`Cannot Hold Second Call`

A call is already on hold, you cannot place two calls on hold at the same time.

`Connection Failed`

The held call could not be made active again.

`Busy Try Later`

Your phone is still working on a previous command. Wait a short time before repeating the command.

`Anonymous`

The person who is calling you has blocked their number from appearing on your phone.

`Unavailable`

The network is unable to provide the caller's number.

`Conference Unsuccessful`

The request for Conference Call has been unsuccessful.

`Transferring Call`

A request to transfer a call has been made.

`Transfer Unsuccessful`

The request to transfer a call has been unsuccessful.

Making a Conference Call

This option joins the active call with a held call. With Conference Call, you can have a conference with up to five other telephones. At any time during your call, you can add, disconnect or separate individuals from the Conference Call using other "In-Call" menu options.

You must subscribe to both Conference Call and Call Waiting Supplementary Services to be able to use this feature.

Initiating a Conference Call

To initiate a Conference Call, place the active call on hold, and dial another phone number. You will then have one active call and one call on hold.

Press the (MENU) key to enter the "In-Call" menu and select `Conference Call`. The currently active call and the call on hold will then join into one Conference Call.

Managing a Conference Call

While in a Conference Call, you will have the option to add new calls to the Conference Call or separate one of the members from the Conference Call.

Adding a New Call

There are a number of different ways to add new calls to the Conference Call:

- Using the digit keys.
- Using the `Make New Call` option from the "In-Call" menu.
- Recalling a Phone Book Entry using Quick Access.
- Answer Call Waiting.

No matter which method is chosen to add a new call, the original Conference Call will be first placed on hold while the new call is being connected. You must then enter the "In-Call" menu and select `Conference Call` to join the New Call with the original Conference Call in progress.

Separate One of the Members in the Conference

During a Conference Call, you will also have the option to separate a selected member from the main Conference Call.

In order to separate a member from the main Conference Call, there must not be any calls on hold.

Press (MENU) during a Conference Call and select `Split Call`. You will then be presented with the phone number or name of all members of the Conference Call. Use the scroll keys to find the selected member of the Conference Call. Once the desired member is selected, press the (OK) key and select `Split Call`.

At this point, the selected call will be separated from the main Conference Call and private conversation between you and the selected member is possible.

To re-join all the parties again, select `Conference Call` from the "In-Call" menu.

Transfer Call

Transfer Call transfers a call to another telephone. There are two ways to transfer a call; *before* or *after* the third party is connected.

You must subscribe to both Conference Call and Call Waiting Supplementary Services to be able to use this feature.

Initiating Transfer Call Before the Third Party is Connected

To transfer a call to another telephone, press the (MENU) key and select `Transfer Call` from the "In-Call" menu. Enter the number where the call will be transferred and press (OK).

Your phone will then attempt to transfer the call. The display will show `Transferring Call` followed by `Call Transferred`. When the call has been successfully transferred, you will be disconnected automatically.

Initiating Transfer Call After the Third Party is Connected

If you already have an active call and a call on hold, press the (MENU) key and select `Transfer Call` from the "In-Call" menu. Your phone will then attempt to transfer the active call to the call on hold. The display will show `Transferring Call` followed by `Call Transferred`. Once the call has been successfully transferred, you will be disconnected automatically.

Using the Options Menu

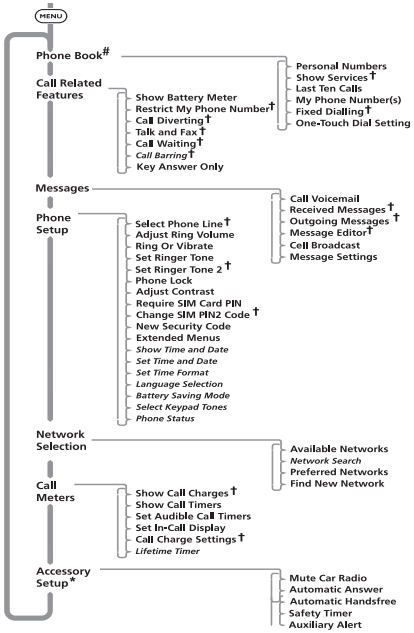

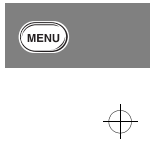

Menu Navigation

Items shown in ***Italics*** are available only when **Extended Menus** are switched on.

If your service provider has added their own menu, the Phone Book menu will not be the first item in the Options menu.

† Availability depends on the type and settings of the SIM card and/or your subscription to these services.

* The **Accessory Setup** option is available only when a car kit or headset accessory are fitted.

The Phone Book Menu

† Availability depends on the type and settings of the SIM card and/or your subscription to these services.

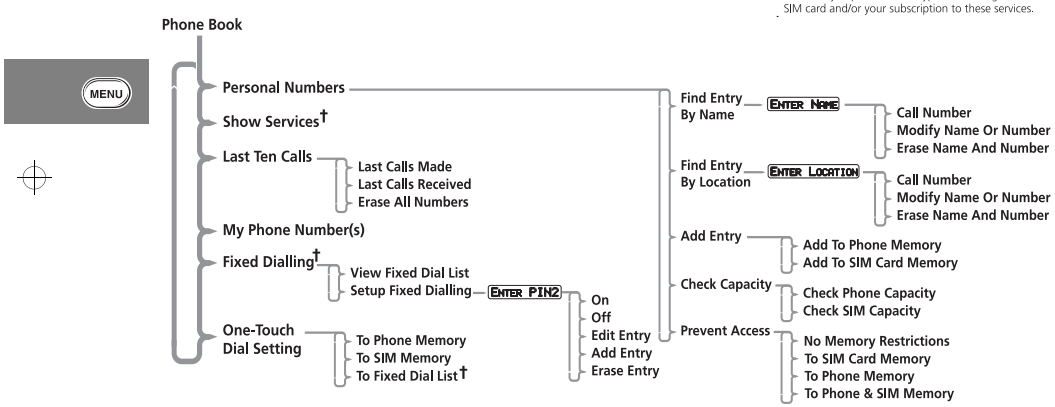

If your service provider has added their own menu, the Phone Book menu will not be the first item in the Options menu.

OK What is the Phone Book?

You can store names and telephone numbers as entries in an electronic 'Phone Book'. These entries are stored in the *Personal Numbers list* in your phone or SIM card's memory, and in the *Fixed Dial list*[1] on your SIM card. Once stored, a number can be quickly retrieved and dialled.

Your phone can store 100 entries and the SIM card can store up to 155 entries in the Personal Numbers list. The number of SIM card entries will vary depending upon the type of SIM card issued by your Cellular Service Provider.

You can also store up to 40 entries in a Fixed Dialling list if you have this feature. Fixed Dialling allows you to limit use of your phone to particular numbers, or, if you wish, to country codes, area codes, or other prefixes of your choosing.

Each Phone Book entry comprises:

- A telephone number. Up to 32 digits can be stored, but this is reduced to 20 digits for SIM card locations.
- A name. Up to 16 characters for phone locations. Up to 50 characters for SIM card locations, but typically 10 or less.
- A location label - from 1 to 255 in your Personal Numbers list, or 1 to 40 in your Fixed Dial list.

1. *Availability of the Fixed Dialling feature depends on the type of SIM card you have.*

Postscripting

This allows you to make use of area codes and other prefixes previously stored in your Phone Book when making a call.

To use postscripting, select the Phone Book entry containing the prefix and then simply enter the rest of the number and press OK to make the call.

You can also use postscripting if you want to call a number similar to one you have stored in your Phone Book. Retrieve the number from the Phone Book, delete the relevant digits and then enter the new number.

☞ *Postscripting a number does not overwrite the entry in the Phone Book.*

☞ *Postscripting is not available when accessing the Phone Book using the Smart button.*

How to Enter Alphabetic Characters

The 0, 1,... ...,8 and 9 keys are used to enter alphabetic characters, for example when storing names in the Phone Book or when creating messages.

For example, if you press the 5 key, the first displayed character will be J. If this is not the required character, then you can press the same key again to show K. Another press will display L, another... ...will display 5. Your phone will continue to scroll through the characters available on the selected key with each new key press.

A long press of any of the keys will switch all the characters to lower case, a second long press will switch back to upper case.

To enter the next character press the appropriate key. If, however, the next character is on the same key as the previous character you will first need to press the # key. Pressing the # key a second time will produce a space.

If a mistake has been made, you can go back to the incorrect character by pressing *.

Characters can be removed from the display by pressing the C key.

The character before the cursor (▮) is the character which will be deleted.

Press the OK key to store the information.

Available Characters

Press the appropriate keys to get the following characters:

1	Space . 1 ? ! , @ _ & : " ( ) ' ¿ ¡ % £ $
	Space . 1 ? ! , @ _ & : " ( ) ' ¿ ¡ % £ $
2	A B C 2 Ä Å À Æ SS Ç
	a b c 2 ä å à æ ß ç
3	D E F 3 Δ É È Φ
	d e f 3 δ é è φ
4	G H I 4 Γ Ì
	g h i 4 γ ì
5	J K L 5 Λ
	j k l 5 λ
6	M N O 6 Ñ Ö Ø Ò Ω
	m n o 6 ñ ö ø ò ω
7	P Q R S 7 Π Β Σ
	p q r s 7 π β σ
8	T U V 8 Θ Ü Ù
	t u v 8 θ ü ù
9	W X Y Z 9 Ξ Ψ
	w x y z 9 ξ ψ
0	+ - 0 x * / = > < #
	+ - 0 x * / = > < #

The top line for each key shows the upper case characters, the lower line shows the lower case.

Personal Numbers

The Personal Numbers sub-menu is used for creating and managing your list of personal numbers.

Find Entry By Name

Press the Smart button (◉) and use the volume buttons to scroll to the stored number, or press the appropriate digit key to skip to a particular letter. To make the call, either hold down ◉ for 1.5 seconds or press (OK).

This option is used to select a telephone number from a list of alphabetically sorted Phone Book names.

Once selected, this option will display the message `Enter Name`. You can enter a maximum of three characters from a name but you do not need to enter all three characters to begin a search.

The Phone Book entries will be searched and the first alphabetically matching entry will be displayed.

If there isn't a name matching your entry, the nearest alphabetically matching entry will be displayed.

If you do not enter any name information, the first alphabetical entry will be displayed.

If there are no names stored, `No Names Stored` will be displayed.

To display adjacent Phone Book entries use the (◂✱) and (#▸) keys. When the desired name is displayed press the (OK) key to select it. The phone will now enter the 'Call Number', 'Modify Name Or Number' or 'Erase Name And Number' options sub-menu.

Find Entry By Location

Location (#▸)

This option is used to select a telephone number from a list of numerically sorted Phone Book locations.

Once selected, this option will display the message `Enter Location`. You can now enter a location number. If the entered location is not valid, a timed message `Range 1-XXX` will be displayed and the phone will return to the `Enter Location` menu item.

The Phone Book entries will be searched and an entry will be displayed.

If you enter a location number for which there is no entry, `Location Empty` will be displayed and the nearest non-empty location will be selected instead.

If you did not enter a location, the first numerical entry will be displayed.

If there are no numbers stored, `No Numbers Stored` will be displayed.

To display adjacent Phone Book entries use the (◂✱) and (#▸) keys. When the desired name is displayed press the (OK) key to select it. The phone will now enter the 'Call Number', 'Modify Name Or Number' or 'Erase Name And Number' options sub-menu.

Call Number, Modify Name or Number or Erase Name And Number Options

Once a Phone Book entry has been selected, it can be called, modified or deleted.

Call Number

This option is used to call the selected Phone Book telephone number.

Modify Name or Number

This option is used to change the selected Phone Book entry.

The entry's current telephone number and name will be presented, in turn, for modification. You can accept the current settings or modify as required.

Erase Name and Number

This option is used to erase the selected Phone Book entry.

Simply press the OK key when the phone displays the message `Erase Name And Number`. The option will display the timed message `Erased XXX` and then return to the appropriate menu item.

Add Entry

This option is used to add (store) entries to the Phone Book. You can choose to add the new entry to either the phone or SIM card memory locations.

Add To Phone Memory, Add To SIM Card Memory

Once you have selected the destination of the new entry, you will be asked to enter the telephone number, name and location number of the new entry.

The last telephone number displayed will be presented by default; it can be used or discarded as required.

If the entered location is not valid, a timed message `Range YYY-ZZZ` will be displayed and the phone will return to the `Enter Location` prompt. If the chosen location is currently used by another entry, you will be asked for confirmation that the location can be overwritten.

If you do not supply a location number, the next available location will be used.

When the new entry has been entered, a timed message `Stored XXX` will be displayed.

Check Capacity

This option is used to check the number of free Phone Book entries in the phone or SIM card memory areas.

Check Phone Capacity, Check SIM Capacity

Once selected, a timed message `XX Unused Locations` displays the requested information.

Prevent Access

This option enables you to prevent access to the Personal Numbers list.

To SIM Card Memory, To Phone Memory, To Phone & SIM Memory, No Memory Restrictions

You can prevent access to all entries in the SIM card memory, the phone memory or both the phone and SIM card memory. To cancel all access restrictions use the No Memory Restrictions option.

When you change the restrictions, you will be requested to enter the Security Code before the change is made.

Show Services

This option displays a list of phone numbers and services provided by your Cellular Service Provider.

Availability depends on the type and settings of the SIM card, and/or your subscription to this feature.

Last Ten Calls

These options can be used to call the most recently used phone numbers.

Once an option has been selected, use the (◄*) and (#►) keys to scroll through the list of phone numbers. Press the (OK) key to call the displayed number.

You can use postscripting to modify a number once you have retrieved it from either of the Last Ten Calls lists.

Last Calls Made

This option can be used to redial the phone number of any one of the last ten calls made.

Last Calls Received

This option can be used to redial the phone number of any one of the last ten calls received.

You will only see numbers in the Last Calls Received list if you have Caller Line Identification.

Erase All Numbers

This option erases all the numbers stored in your Last Ten Calls Made and Last Ten Calls Received lists.

The Last Ten Calls lists will be erased when a new SIM is inserted in the phone.

My Phone Number(s)

This option allows you to access your cellular phone, fax and data numbers so that you can retrieve or modify them when required. For example, if you have difficulty remembering your cellular phone number, store it with the name '*My Phone*' and then you will be able to retrieve the number as required.

The My Phone Number(s) list is stored on your SIM card.

When you select this item, the first location will be displayed. Use the (◄✱) and (#►) keys to scroll through the phone numbers stored.

To enter or change a number, scroll to the location and press (OK). You will be prompted to enter a phone number and then a name. Press (OK) to store the information.

Depending on your Cellular Service Provider, you may find that one or more of the entries in the My Phone Number(s) list will have been defined. You may not be able to change these predefined entries.

Fixed Dialling

Availability of the Fixed Dialling menu depends on the type of SIM card.

This feature allows you to limit use (typically third-party use) of your phone to a predefined list of telephone numbers or, if you wish, to a list of country codes, area codes, or other prefixes of your choosing.

When Fixed Dialling is switched on, the only numbers that can be dialled from your phone are those stored (or whose prefix is stored) in the Fixed Dial list. If you attempt to dial any other number (apart from an emergency number), the message `Restricted` will be displayed. You will not be able to make fax or data calls.

To make a call when Fixed Dialling is switched on, either dial the number manually, or select it from the Fixed Dial list and press (OK).

Up to 40 entries can be stored in the Fixed Dial list. The list is stored on your SIM card.

This option may be affected by the Call Barring setting.

View Fixed Dial List

This option allows you to scroll through the numbers in the Fixed Dial list. When you find the number you want, press (OK) to make the call.

Setup Fixed Dialling

This option allows you to switch Fixed Dialling on or off and to enter or change entries in the Fixed Dial list.

You will be prompted to enter your PIN2 security code when you select this option.

On

Switches fixed dialling on.

Off

Switches fixed dialling off.

Edit Entry

Modifies or clears an entry in the Fixed Dial list. When you select this option, the first non-empty location in the list will be displayed. Scroll to the entry you want to change and press (OK). You will be prompted to edit the phone number and the name. To erase the entry, press (C).

Add Entry

Adds a phone number and name to the Fixed Dial list. When you select this option you will be prompted to enter the phone number, name and a location number. If you do not specify a location number, it will be stored in the next available location.

When setting up your Fixed Dial list, you may want to reserve the first nine locations for phone numbers you wish to One-Touch Dial. See also 'One-Touch Dial Setting'.

Erase Entry

Erases a phone number and name from the Fixed Dial list. The first entry in the Fixed Dial list will be displayed. Scroll to the entry you wish to delete and press (OK).

One-Touch Dial Setting

This option allows you to specify which Phone Book list can be One-Touch Dialled.

To Phone Memory

Switches One-Touch Dialling to your Personal Numbers list stored in phone memory (locations 1 to 9).

To SIM Memory

Switches One-Touch Dialling to your Personal Numbers list stored on your SIM card (locations 101 to 109).

To Fixed Dial list

This option is only available if you have Fixed Dialling.

Switches One-Touch Dialling to your Fixed Dial list (locations 1 to 9).

Call Related Features Menu

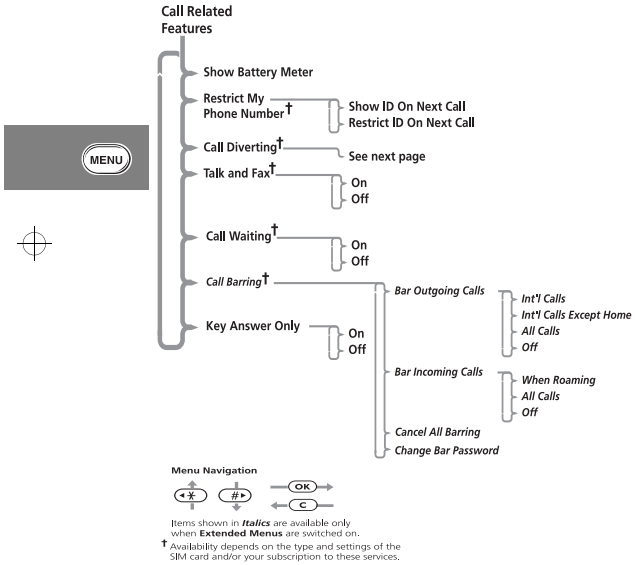

Show Battery Meter

This option displays the approximate amount of battery capacity remaining, for example:

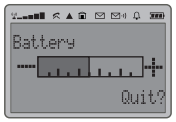

Number of Segments	Approximate Charge Level
1	less than 5% (recharging needed)
3	less than 20%
5	less than 60%
7	greater than 60%

Display the detailed battery meter easily with the Quick Access item (-+).

Restrict My Phone Number

'Restrict My Phone Number' is a network feature. You will need to subscribe to one of the two Caller Line Identification restriction features with your Cellular Service Provider.

Show ID on Next Call

Your phone number is sent with the next attempted call, after this your phone number will not be sent until you re-select this option.

Restrict ID on Next Call

Your phone number will not be sent with the next attempted call, after this your phone number will be sent with calls until you re-select this option.

OK Call Diverting

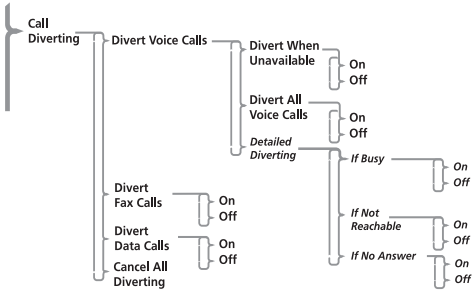

Call diverting is a network feature. If your phone is unavailable, or you do not wish to receive calls, incoming calls can be diverted to other phone numbers.

This option can be used to:

- Divert all incoming Voice calls unconditionally.
- Divert incoming Voice calls whenever your phone is unavailable, busy, not reachable or not answered.
- Divert incoming Fax calls.
- Divert incoming Data calls.
- Reset all diversion options to off.

☞ *You cannot change the call divert settings when you are out of network coverage.*

After selecting any of the call divert options there will be a short delay while the phone asks the network for the current setting.

Divert Voice Calls

This option will allow you to set your phone to *Divert When Unavailable*, *Divert All Voice Calls* or *Detailed Diverting*.

Divert When Unavailable

This option will enable you to divert all incoming Voice calls to a single number, whenever your phone is unavailable.

The option has two settings, On or Off.

If you change the setting to On, you will be asked to enter a diversion phone number using the digit keys.

Setting "Divert When Unavailable" to On will have the same effect as setting all "Detailed Diverting" options to On.

When On, Divert When Unavailable takes priority over detailed diversion settings.

Divert All Voice Calls

This option will enable you to *unconditionally* divert all incoming Voice calls to a single number.

The option has two settings, On or Off.

If you change the setting to On, you will be asked to enter a diversion phone number using the digit keys.

When On, Divert All Voice Calls takes priority over all other Voice call diversion settings.

Switch between Divert On and Off easily with the Quick Access item ( ).

Detailed Diverting

These options will enable you to divert Voice calls to different numbers, depending upon the current status of your phone.

Each of the following detailed diverting options operate in the same way.

Each option has two settings, On or Off.

If you change the setting to On, you will be asked to enter a diversion phone number using the digit keys.

Detailed diversion settings are ignored while Divert All Voice Calls or Divert When Unavailable are On.

If Busy

This option will divert incoming calls if your phone is busy.

If Not Reachable

This option will divert incoming calls if your phone cannot be contacted by the network.

If No Answer

This option will divert incoming calls if you do not answer the call.

Divert Fax Calls

This option will enable you to divert all Fax calls to a single number.

The option has two settings, On or Off.

If you change the setting to On, you will be asked to enter a diversion phone number using the digit keys.

Divert Data Calls

This option will enable you to divert all Data calls to a single number.

The option has two settings, On or Off.

If you change the setting to On, you will be asked to enter a diversion phone number using the digit keys.

Cancel All Diverting

This option will enable you to cancel the diversion of incoming calls.

This option resets all diversion settings to Off and removes all diversion numbers.

Talk and Fax

This is a network feature that allows you to speak and then send or receive a fax during the course of a single call.

Your phone supports a data and fax transmission speed of up to 9600 bps.

Before making a Talk and Fax call, ensure that:

- Your phone is "fax-ready" (it has been switched off, connected to the fax with one of the optional data/fax accessories, then switched back on). Connecting your phone to the fax in the middle of the call will not work.
- The Talk and Fax mode is set to On.

A Talk and Fax call automatically switches to fax mode when you start sending the fax. While the fax is being transmitted, the message Fax in progress will be displayed. The call automatically ends when the fax transmission is complete. You cannot switch back to voice mode in the same call.

While a Talk and Fax call is active, incoming call services like Call Waiting and Call Holding are suspended.

If you receive a Talk and Fax call when:

- Your phone is not fax-ready - you can only talk.
- Your phone is fax-ready but Talk and Fax mode is off - the call is automatically routed to your fax (you cannot talk).

On

Switches Talk and Fax mode on for the next and all subsequent calls.

Off

Switches Talk and Fax mode off for the next and all subsequent calls.

Call Waiting

The Call Waiting menu item has two settings On or Off. If you select Off, you will be not be notified of waiting calls. The person trying to contact you will either receive the busy tone, or be diverted by the 'Detailed Diverting - If Busy' option.

If Call Waiting is On, you will be notified of a waiting call by an audible alert and by the message Call Waiting - Answer?. You can press the OK key to accept the waiting call, or use the MENU key to scroll to an alternative option and then press OK.

If you have Caller Line Identification, the caller's number or name is displayed instead of the Call Waiting message.

Availability of this feature depends on your service provider.

Call Barring

Call barring is a network feature which can be used to selectively bar outgoing and incoming calls.

If you change the barring setting, you may be asked to enter your barring password. There will be a short delay while the phone notifies the network of the new setting. When the change has been made by the network, the phone will display a confirmation message.

The *initial* password will be supplied to you by your Cellular Service Provider when you subscribe to this service.

This option may be affected by the Fixed Dialling setting.

Bar Outgoing Calls

After selecting this option, there will be a short delay while the phone asks the network for the current setting.

Int'l Calls

When selected, this option will bar outgoing international calls.

Int'l Calls Except Home

When selected, this option will bar outgoing international calls, except those to your home country.

All Calls

When selected, this option will bar all outgoing calls, except emergency calls.

Off

When selected, this option will disable all call barring for outgoing calls.

Bar Incoming Calls

After selecting this option, there will be a short delay while the phone asks the network for the current setting.

When Roaming

When selected, this option will bar incoming calls when you are roaming.

You may wish to select this option, as some Cellular Service Providers charge an additional fee for receiving calls when you are roaming.

All Calls

When selected, this option will bar all incoming calls.

Off

When selected, this option will disable all call barring for incoming calls.

Cancel All Barring

This option can be used to set all Call Barring options to Off.

Change Bar Password

This option can be used to change the call barring password.

After selecting this option, you will be asked to enter the current password.

You will then be asked to enter, and then re-enter, your new, **4 digit**, barring password. When the change has been made by the network, the phone will display a confirmation message.

Key Answer Only

This option is only available if you have a phone with a flip.

This feature has two options: On or Off.

When set to On, this feature allows the flip to be opened without answering an incoming call. The call can be answered by pressing an appropriate key (OK, 1 to 9, * or #). To reject the call press C.

When set to Off, opening the flip answers an incoming call.

Messages Menu

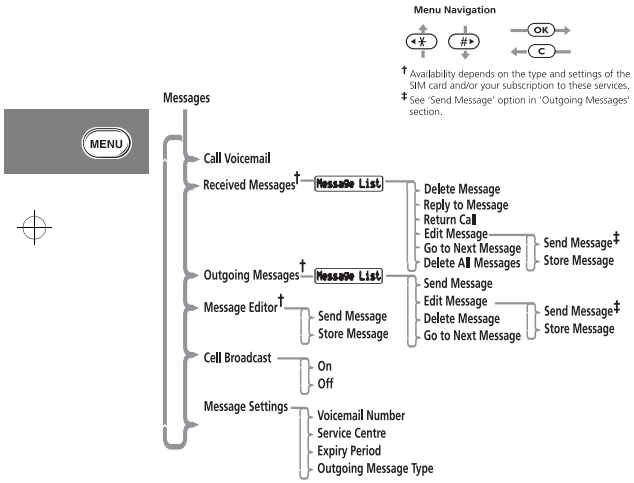

Your phone supports the two GSM message features: Short Message Services (SMS) and Cell Broadcast.

SMS Messages

These are text messages that are sent specifically to and from your phone number.

When an SMS message is received, your phone:

1. Makes three short alert tones (depending on the 'Ring or Vibrate' setting).
2. Displays the ✉ (messages) icon.
3. Stores the message for later viewing, if there is space. If there is not enough space, the ✉ icon will flash. One or more messages must be removed before the message can be stored.

Your Cellular Service Provider will transmit a message for a limited amount of time. If a memory location is not made available before the message is removed from the network, then you will not be able to receive or read it.

4. `Message` will then be displayed with the prompt; `Read Now?`
5. If (OK) is pressed, the phone will enter the Received Messages browser and immediately display the new message.
6. If (C) is pressed the phone will return to the screen which was displayed prior to receipt of the message.
7. If any other key is pressed it will perform the function linked with that key.
8. If no key is pressed the display will time-out after 1 minute and return to the screen which was displayed prior to receipt of the message.

Cell Broadcast Messages

These are general messages, broadcast to a group of phones and can only be received when your phone is in standby mode.

These messages are broadcast in numbered 'channels' and, in general, each channel will tend to carry one particular type of information.

Typical cell broadcast channels could have information on local weather conditions, traffic reports or stock market prices. Please contact your network operator for a list of available channels and the information they supply.

When the message has scrolled across the display, the beginning of the message will be shown until you either remove it or a new message arrives.

How to Read SMS Messages

You can use the scroll keys (◄✱ and #►) to scroll through messages in either the Received Messages or Outgoing Messages lists.

To display a specific message, enter the message number, for example press 5 to display the 5th message. If the message does not exist, `Invalid Msg Number` will be displayed.

Alternatively, to display the next message, press OK and select `Go To Next Message`.

How to Create and Edit SMS Messages

Use the *Message Editor* to create or modify text messages. When you enter the editor, the last message that was edited will be displayed. Press and hold C to clear the message and start a new one, or modify the message displayed. For an explanation of how to enter text, see 'How to Enter Alphabetic Characters' .

Press OK once you have completed your message. You will then be presented with the following options:

`Send Message` - If you select this option you will be prompted for a phone number, enter the number and then press OK to send the message.

`Store Message` - Select this option to store your edited message in your Outgoing Messages list.

☞ *If you don't store the message after it has been edited, you will lose all your changes as soon as you select another message to be edited.*

OK Call Voicemail

This option will make a call to the current voicemail number.

The voicemail number is entered using the 'Voicemail Number' option in the Message Settings menu.

OK Received Messages

This option is used to view and manage any SMS messages that have been sent to your phone number.

When selected, this option will display a message indicating the total number of messages and how many of these are new. If there are no messages `No Messages` will be displayed.

If there are messages, the new messages will be displayed first, followed by the old. Repeated presses of the (MENU) key will display the whole message, when it was sent and the phone number who sent it (if available).

Once you have read a new message it will automatically become old.

See 'How to Read SMS Messages' for more information on navigating through the messages.

Press the (OK) key, when viewing any message, to enter the sub-menu.

Delete Message

This option will delete the currently viewed message

Reply to Message

This option allows you to reply with a message.

Return Call

This option can be used to call the person who sent you the message, if their number has been included by the network, or a number that has been included in quotes " " in the message.

Edit Message

This option allows you to use the Message Editor to edit the selected message and then to either send the modified message and/or store it in your Outgoing Messages list. See 'How to Create and Edit SMS Messages' for more information on using the Message Editor.

Go to Next Message

This option will display the next received message.

If you are currently reading the last message in your list then this option will take you back to the top of the list.

Delete All Messages

This option allows you to delete all received messages whether they have been read or not.

Once deleted, messages are NOT retrievable.

Outgoing Messages

This option is used to view and manage any outgoing messages. These messages will be stored on your SIM card. When you select this option, the total number of messages will be displayed followed by the first message in the list.

You cannot send an outgoing message until the Message Service Centre number has been set. See 'Message Settings'.

Press the (OK) key, when viewing any message, to enter the sub-menu. See 'How to Read SMS Messages' for more information on navigating through the messages.

Send Message

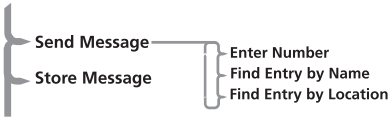

This option allows you to add the destination phone number using a sub-menu. Using the scroll keys you can select:

Enter Number - this allows you to manually enter the phone number using the keypad and send the mesage.

Find Entry by Name - this allows you to recall a phone number from the Phone Book by name and send the message (see 'Find Entry by Name' in the 'Phone Book' section).

Find Entry by Location - this allows you to recall a phone number from the Phone Book by location and send the messaage (see 'Find Entry by Location' in the 'Phone Book' section).

Edit Message

This option allows you to use the Message Editor to edit the selected message and then to either send the modified message or store it in your Outgoing Messages list. See 'How to Create and Edit SMS Messages' for more information on using the Message Editor.

Delete Message

This option will delete the currently viewed message.

Go to Next Message

This option will display the next outgoing message.

Message Editor

The Message Editor is used to edit the currently selected message and then to either send the modified message or store it in your Outgoing Messages list. See 'How to Create and Edit SMS Messages' for more information on using the Message Editor.

Cell Broadcast

This option is used to set the cell broadcast settings. The option has two settings On or Off.

If you change the setting to On, you will be asked to enter the channel you wish to receive information from.

Please contact your Cellular Service Provider for a list of available channels and the information they provide.

While a broadcast message is scrolling across the display you can stop and start it by pressing (*). Press (#) to restart the message from the beginning. If you want to remove the message from the display, press (C).

If you need to use the (*) and (#) keys for their normal functions while you are receiving a cell broadcast message, you must first remove the message.

Message Settings

Voicemail Number

This option is used to enter a phone number which will be used by the 'Call Voicemail' option.

If there is already a Voicemail Number, this will be shown in the display. This can be used, modified or deleted as desired.

Service Centre

Before you can send any messages you must use this option to enter your Message Service Centre number. This number is obtained from your Cellular Service Provider.

If there is already a Message Service Centre number, this will be shown in the display. This can be used, modified or deleted as desired.

Expiry Period

You can use this option to specify the maximum time, in hours, that your unforwarded messages are to remain with the Message Service Centre before being deleted. When you select this option, the current expiry period will be displayed (the default is 24 hours).

The maximum value you can enter is 10584, though the real limit will depend on your Message Service Centre.

Outgoing Message Type

This option is network dependent and can be used to specify the format of your outgoing messages. You can select from the following message types: Text (default), Fax, X400, Paging, E-Mail, ERMES or Voice.

You do not need to select Voice to send messages to Voicemail boxes.

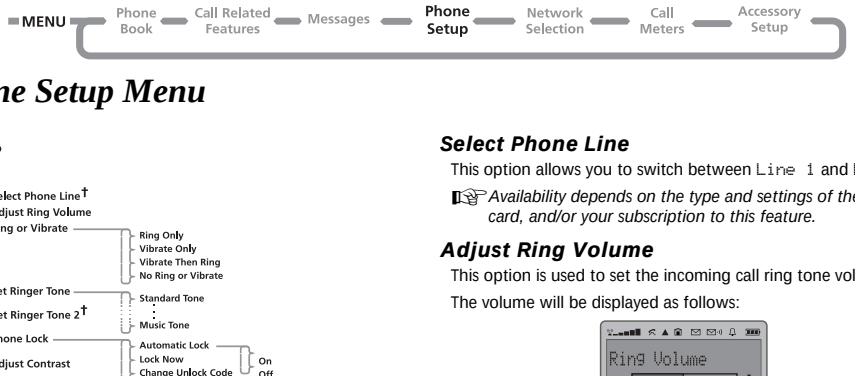

Phone Setup Menu

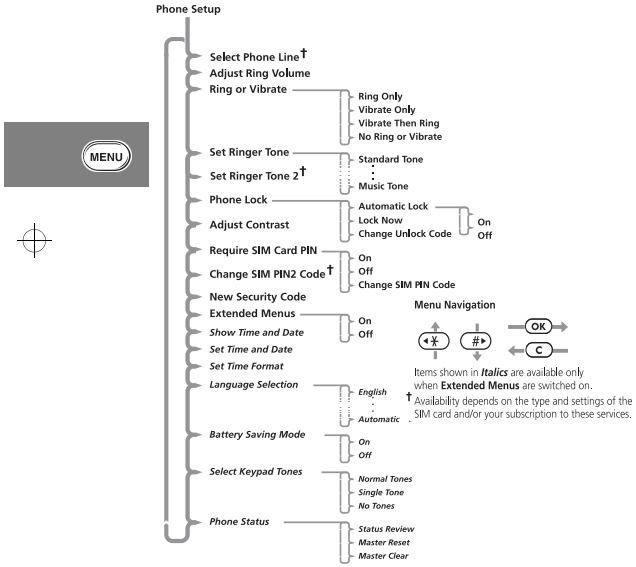

Select Phone Line

This option allows you to switch between `Line 1` and `Line 2`.

Availability depends on the type and settings of the SIM card, and/or your subscription to this feature.

Adjust Ring Volume

This option is used to set the incoming call ring tone volume.

The volume will be displayed as follows:

Adjust the volume by pressing the volume buttons on the side of your phone.

Press ↑ followed by the appropriate volume button to either increase or decrease the ringer volume.

OK Ring or Vibrate

This option sets the way your phone alerts you to an incoming call. The options are:

- `Ring Only` - the phone will ring with the tone specified by the Set Ringer Tone option.
- `Vibrate Only` - the phone will vibrate using VibraCall™.
- `Vibrate Then Ring` - the phone will vibrate twice and then ring.
- `No Ring or Vibrate` - the phone will just display the `Call` message.

The setting you choose also defines the type of alert for an incoming SMS message (except that if you select Vibrate Then Ring, your phone will just vibrate).

OK Set Ringer Tone

This option sets the tone your phone will make when an incoming call is received on Line 1.

Standard Tone

Your phone makes a standard ringing tone.

Single Ring Tone - Music Tone

When selected, your phone will produce one of these alternative ringer tones.

If you select the Single Ring Tone option, the phone will only ring once when a call is received.

OK Set Ringer Tone 2

This option sets the tone your phone will make when an incoming call is received on Line 2.

This option will not appear if you do not subscribe to Line 2.

OK Phone Lock

This option is used to set, and change, the unlock code.

The unlock code can be set to protect your phone from unauthorised use. It can be set to automatically lock your phone each time it is switched on.

The unlock code is a four digit number which is set at manufacture to **1234**. This can be changed at any time by using the 'change unlock code' option.

Automatic Lock

This option can be used to automatically lock your phone each time it is switched on. The option has two settings, `On` or `Off`.

Lock Now

This option can be used to immediately lock your phone. Once selected, your phone will be unusable until the unlock code is entered.

Change Unlock Code

This option is used to change the unlock code.

After selecting this option, you will be asked to enter the current security code before you can proceed.

You can now enter a four digit code to replace the old code.

By pressing the MENU key, you can access this option even when the phone is locked.

Adjust Contrast

This option is used to adjust the screen contrast.

The contrast is displayed as follows:

Adjust the contrast by pressing (*) or (#) on the keypad.

Pressing (OK) or (C) on the keypad will end the contrast adjustment.

Require SIM Card PIN

This option is used to set, and change, the PIN code.

The PIN code can be set to protect your SIM card from unauthorised use. If set to `On`, access to your SIM card will be restricted each time it is inserted or the phone is turned on.

The option has two settings, `On` or `Off`.

If the SIM card does not support PIN code disabling, these items will not appear.

Change SIM PIN Code

This option is used to change the SIM card PIN code.

The 'Require SIM Card PIN' option must be set to `On` and you must enter the old PIN code before you can proceed.

You will be asked to enter a new, four to eight digit code to replace the old PIN code. The new PIN code must be entered again as confirmation.

If the PIN number is entered incorrectly three times in a row, your SIM card will automatically lock-up and the `Blocked` message will be displayed.

Unblocking Your Phone

If you receive the `Blocked` message you will need to enter an unblock code and key sequence before you can use the phone.

The 8 digit PIN unblocking code will have been provided with your SIM card by your Cellular Service Provider.

Enter the following key sequence to unblock your phone:

(*) (*) (0) (5) (*) **Unblock Code** (OK)
New PIN Code (OK) **New PIN Code** (OK)

The new PIN code must contain four to eight digits.

If this operation is performed incorrectly 10 times in a row, your SIM card will become permanently blocked.

Change SIM PIN2 Code

This option is used to change your PIN2 security code.

When you select this option you must enter the old PIN2 security code before you can proceed.

You will be asked to enter a new, four to eight digit code to replace the old PIN2 security code. The new PIN2 security code must be entered again as confirmation.

If the PIN2 security code is entered incorrectly three times in a row, the `Blocked` message will be displayed.

When the `Blocked` message is displayed, you are not allowed access to menu items that require you to enter the PIN2 code, for example 'Setup Fixed Dialling' and 'Call Charge Settings'.

If you receive the `Blocked` message when you try to enter your PIN2 code, you will need to unblock and change the code using the following key sequence:

◄✱ ◄✱ 0+ 5JKL 2ABC ◄✱ **Unblock Code** OK
New PIN2 Code OK **New PIN2 Code** OK

The 8-digit unblocking code will have been provided with your SIM card by your Cellular Service Provider.

If the PIN2 unblocking operation is performed incorrectly 10 times in a row, your PIN2 code will become permanently blocked.

OK New Security Code

The security code is used to control access to security and other options within the menus.

This option is used to change the security code, which is set at manufacture to **000000**.

Once selected, you will be asked to enter the current security code before you can proceed.

You will then be asked to enter a new, six digit code to replace the old security code.

In order to safeguard your phone, you should change your security code from the factory setting as soon as possible.

OK Extended Menus

Press and hold MENU. Extended Menus will be temporarily activated until you exit the Options menu.

This option is used to switch the extended menus on or off.

If the extended menu option is switched off, you will not be able to access any of the extended features.

The option has two settings, `On` or `Off`.

Show Time and Date

When selected, this option displays the time and date until any key is pressed.

OK Set Time and Date

This option is used to set the time and date. You will be prompted to `Enter Time` - the time must be entered in 24-hour format. You will then be prompted to `Enter Date`.

OK Set Time Format

This option is used to set the clock to either 12-hour or 24-hour format.

OK Language Selection

This option is used to change the language for display messages.

The option has multiple settings.

When you select a language, all further display prompts and help messages will be in the selected language.

Battery Saving Mode

This option can help you to conserve battery power. Also known as DTX (Discontinuous Transmission), this feature will cause your phone to operate at reduced power when you are not talking.

The option has two settings, `On` or `Off`.

OK Select Keypad Tones

This option allows you to change or disable tones you hear when you press a key.

The option has three settings, `Normal Tones`, `Single Tone` or `No Tones`.

Phone Status

Status Review

This option can be used to view the current setting of menu options.

When selected, your phone will display a list of menu items which have been changed from the default setting. Press the MENU key to view the next item.

Master Reset

! This option should be used with caution.

This option is used to restore certain phone options to their original settings.

When selected, you will be asked to enter the security code. Once entered, the master reset option will perform the following operations:

- Cancel Automatic Answer, Audible Call Timers, In-Call Display Meter, Battery Save (DTX), Auxiliary Alert, Automatic Handsfree, Automatic Lock, Cell Broadcast and Talk and Fax Mode.
- Return Language Selection to Original.
- Restore Keypad Tones to Normal, Ringer Tones to Standard, Volume Level to Medium and Network Search frequency to Medium.
- Restore Extended Menus to their default settings.

Master Clear

This option should be used with extreme caution, for example it will clear all the Phone Book entries from your phone memory.

This option is used to restore certain phone options to their original settings.

When selected, you will be asked to enter the security code. Once entered, the master clear option will perform the same operations as 'Master Reset', plus the following operations:

- Clear the Phone Book entries from phone memory (not from SIM memory)
- Clear the Last Calls Made and Last Calls received list
- Clear the Message Editor
- Reset the Resettable Call Timers.

Master Clear does **not** clear the:

- Fixed Dial list
- My Number(s) list
- Charge Meters
- Received and Outgoing Messages list
- Voicemail number
- SMS Service Centre number
- Lifetime timer.

Network Selection Menu

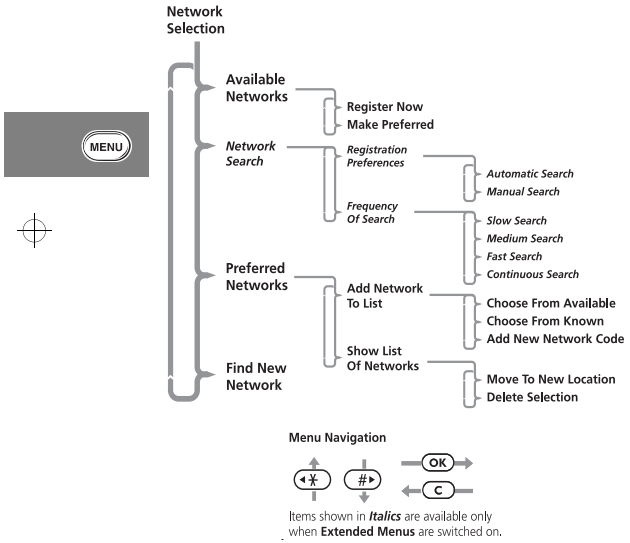

Network Selection

In order for the phone to make and receive phone calls, it must register with one of the available networks. These can be either GSM900, GSM1800 or combined GSM900/1800 types of network.

Your phone automatically searches for the last network used. If, for any reason, this network is unavailable, your phone will attempt to register with a new network.

When your phone needs to register with a new network, it will generate a sorted list of networks.The network list is sorted in the following order:

- The Home network.
- Networks from a preferred list.
- A random list of other networks found above a certain signal strength.
- All remaining networks in descending order of signal strength. Any forbidden networks, stored in the SIM card, will not be included in the sorted list.

Available Networks

When selected, this option will scan to see which networks are operating in your current location. When the scan is complete, press the (MENU) key to scroll through the list. When you see a network you wish to register with or store in your preferred list, press the (OK) key. You will now enter the 'Register Now' and 'Make Preferred' sub-menu.

Register Now

Once selected, your phone will try to register with the selected network. If the registration fails, your phone will try to register in the normal way.

Make Preferred

Once selected, you will be asked where the selected network is to be located in the preferred list.

Network Search

These options determine how often your phone tries to register with a network and how the attempt is made.

Registration Preferences

This option determines how the phone tries to register with a network.

The option has two settings, `Automatic Search` or `Manual Search`.

Automatic Search Mode

In the automatic mode, the phone will try to register with the first network in the sorted list. If this is successful, your phone will display the network name and then enter the standby mode.

If registration is unsuccessful with one network in the list, your phone will try the next listed network. If your phone fails to register with any of the listed networks, it will start at the beginning of the list after a preset period. The preset period is determined by the 'Frequency Of Search' option.

Manual Search Mode

In the manual mode, the phone will present you with the sorted list of networks. Use the (*), (#) and (OK) keys to select one network from the list. Your phone will try to register with the selected network. If this is successful, the phone will display the network name and then enter the standby mode.

If registration is unsuccessful, your phone will present the list again after a preset period. The preset period is determined by the 'Frequency Of Search' option.

Frequency of Search

This option is used to determine how long your phone waits before attempting to re-register after a registration attempt has failed.

The option has the following settings: `Slow Search`, `Medium Search`, `Fast Search` or `Continuous Search`.

! Fast and Continuous Search may use up a significant amount of battery power.

OK *Preferred Networks*

Add Network to List

This option enables you to add networks to your preferred list.

When selected, the 'Choose From Available' option will scan to see which networks are operating in your current location. When the scan is complete, press the MENU key to scroll through the list. When you see a network you wish to store in your preferred list, press the OK key. You will be asked where the selected network is to be located in the preferred list.

The 'Choose From Known' option will, when selected, present you with a preset list of networks. Press the MENU key to scroll through the list. When you see a network you wish to store in your preferred list, press the OK key. You will be asked where the selected network is to be located in the preferred list.

Select the 'Add New Network Code' option to enter network codes directly. Once entered, you will be asked where the network is to be located in the preferred list.

Show List of Networks

This option is used to display the networks you have stored in your preferred list. In addition, pressing the OK key will select the currently displayed entry and enter a move/delete sub-menu.

When 'Move to New Location' is selected you will be asked to enter a new location for the selected network.

When selected, 'Delete Selection' will remove the selected network from the preferred list.

Find New Network

When selected, the phone will try to register with a network in the normal manner, with one exception. When the registration attempt is made, your current network will be excluded from the list of those available. If the attempt fails, your phone will then try to re-register with the previous network.

Call Meters Menu

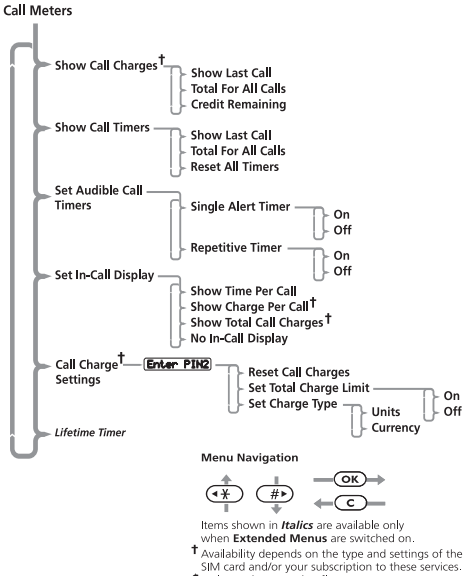

Call Metering

Your phone has an internal metering system which can be used to provide you with individual and total call times or costs.

Call cost information is only available if you receive the Advice of Charge service. If you do not receive this service, then only time meters are available.

The meter can be displayed during a phone call and audible tones can be generated to indicate the passage of call time.

Your phone can handle values up to 21 digits long, although during calls it can only display the last 12 digits. If the value exceeds 21 digits, then `Too Large` is displayed.

In addition, you can set a maximum charge limit so that your phone will monitor either the number of units used or the call cost, and then not allow the limit to be exceeded.

Show Call Charges

This feature allows you to display the cost of your calls or the amount of credit remaining. The figures are in phone units or currency depending on the setting of the `Set Charge Type` option.

Show Call Charges is only available if you receive the Advice of Charge service.

Show Last Call

Displays the cost of your last chargeable call.

Total For All Calls

Displays the cost of all your chargeable calls since the charge meters were reset to zero using the 'Reset Call Charges' option.

Credit Remaining

Displays the difference between your total call costs and the limit specified by the 'Set Total Charge Limit' option. If there is no limit, `No Charge Limit Set` will be displayed.

Show Call Timers

MENU

This feature allows you to display the duration of your calls and to reset your time meters to zero.

If you receive the Advice of Charge service then all calls are timed. If you do not receive the Advice of Charge service then, depending on the model, either all calls or only outgoing calls are timed.

Show Last Call

Displays the duration of your last call.

Total For All Calls

Displays the duration of all your calls since the time meter was reset to zero using the 'Reset All Timers' option.

Reset All Timers

Sets the resettable time meters to zero. The Lifetime Meter is not resettable.

OK *Set Audible Call Timers*

Your phone provides two programmable audible call timers:

- The 'Single Alert Timer' will sound a beep just once during a call, after a preset time has elapsed.
- The 'Repetitive Timer' will sound regular beeps during a call, at preset intervals.

In both cases, the timers will sound their beeps ten seconds before the end of the programmed time.

Set In-Call Display

This feature allows you to specify whether the time or charge meters are displayed during a call. If you do not have the Advice of Charge service, then only the time meter is available.

If a total charge limit has been set, then the in-call display always shows your remaining credit.

Show Time Per Call

This option is used to display the time meter during calls. If you receive the Advice of Charge service, only the chargeable calls will be displayed.

Show Charge Per Call, Show Total Call Charges

These menu items are only available if you receive the Advice of Charge service.

These options are used to display the call charges meter during and after chargeable calls. The meter shows phone units or currency depending on the setting of the 'Set Charge Type' option.

No In-Call Display

This option switches off in-call display of the charge/time meter.

Call Charge Settings

This feature allows you to customise your Advice of Charge settings. You will be prompted to enter your PIN2 security code before you can access the options.

This menu item is only available if you receive the Advice of Charge service.

Reset Call Charges

This option resets your charge meters to zero.

Set Total Charge Limit

This option sets the maximum limit for call charges; once this limit has been reached, the network will refuse any further chargeable calls.

If you switch the charge limit `On`, you will be prompted to enter a new limit. Enter the amount as either units or currency depending on the setting of the `Set Charge Type` option. Units must be entered as whole numbers.

When the charge limit is `On`, you will not be able to make fax or data calls.

Once a limit is set, the in-call display will show the remaining credit. When you reach your last two minutes, the warning message `Approaching Charge Limit` will be displayed and a warning alert will sound. The sound will be repeated when one minute remains. When the limit is reached the message `Charge Limit Reached` will be displayed and you will not be able to make any more chargeable calls.

Once the limit is reached the Total Charge Limit will need to be reset or switched off before any chargeable calls can be made.

Select `Off` to switch off the charge limit.

Set Charge Type

This option defines whether charge information is displayed as either phone units or currency.

Units

Sets the charge type to phone units.

Currency

Sets the charge type to currency. You will be prompted to enter the Currency Name. Enter a 3-character notation, for example GBP for the UK, DEM for Germany or FFR for France. You will then be prompted for the Charge Per Unit. Enter the amount and press (OK).

Lifetime Timer

This option is used to display the total time of all calls made on your phone.

This meter can not be reset, the `Reset All Timers`, `Master Reset` or `Master Clear` options have no effect.

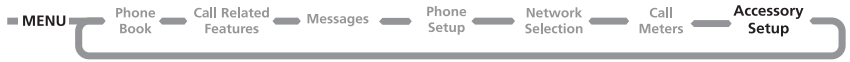

Accessory Setup Menu

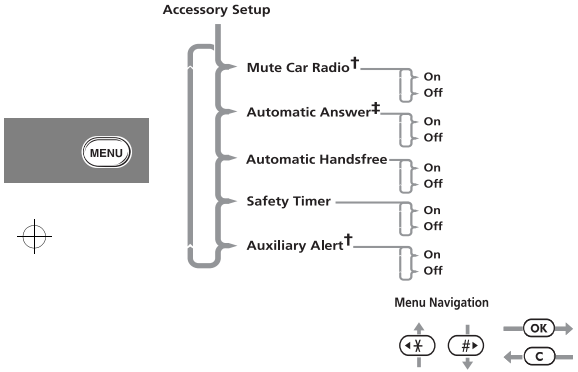

† Only this option will be displayed when the headset accessory is attached.

‡ Availability depends on the type of car kit installed.

You will only be able to access this menu when your phone is mounted in a car kit or when a headset accessory is attached.

Car kits can provide charging facilities and some provide connection to an external antenna for better reception.

Your phone can also be linked to external microphones and speakers for hands free operation, and provides several options to complement the use of car kits.

OK Mute Car Radio

This option can be used to mute your car radio when you make, or receive, a call when your phone is attached to the car kit. It must be enabled by your local dealer.

This option has two settings, On or Off.

This option will have no effect if your car radio does not have a mute feature, or if the car kit installation does not support this option.

Automatic Answer

This option allows your phone to automatically answer an incoming call after two rings.

This option has two settings, On or Off.

If this option is On, we recommend that the 'Ring or Vibrate' option be set to Ring Only.

Automatic Handsfree

This option is used in conjunction with the 'Automatic Answer' option and a car kit, to transfer call conversation to external microphones and speakers. It is available only with selected car kits. Contact your Motorola representative for further details.

This option has two settings, On or Off.

Safety Timer

This option can be used to keep the phone on for a set period after the vehicle ignition has been turned off. This prevents the vehicle's battery from becoming drained and saves you from having to re-enter PIN and Unlock codes after every short stop.

As standard the 'Safety Timer' is set to 60 minutes. Once selected, this option can be adjusted to any value between zero and 999 minutes. When set to zero, this option is effectively switched off.

Auxiliary Alert

This option allows your phone to alert you of an incoming call by flashing your vehicle lights, or by sounding the horn. It must be enabled by your local dealer.

Some local regulations prevent the use of this option and, accordingly, this option may not be present on your phone.

MENU

Using the Quick Access Menu

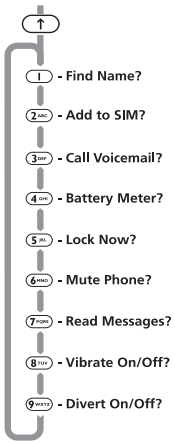

Menu Navigation

The menu shown above represents the default setting supplied with your phone.

Although the features in your phone are available through easy access menus, some of the most commonly used features are also available in the Quick Access menu. Each feature in the menu is allocated a number from 1 to 9.

To use a Quick Access feature, press the quick access key (↑) followed by the number of the feature, or press (*) or (#) to scroll through the menu and then press (OK).

You can change the features, and the positions of the features, available in the Quick Access menu - see 'Customising the Quick Access Menu'.

Each Quick Access feature is represented by an icon as well as the feature name. The currently selected icon is shown with a dark background.

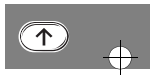

Find Name?

You will be prompted to `Enter Name`. Enter the first three characters of the name and press (OK). The first matching entry in the Phone Book will be displayed. Press (OK) to call the number.

Add to SIM?

You will be prompted to enter a phone number and then a name.

If you already had a number displayed, it will automatically be re-displayed when you select this feature.

The number will be stored in the next available SIM card location. See 'Add Entry' for more information.

Call Voicemail?

Your phone will make a call to your voicemail number.

You must have defined a Voicemail number in order to use this feature.

See 'Call Voicemail' for more information.

Battery Meter?

A bar graph indicating the approximate battery charge level will be displayed. The more bars displayed, the greater the charge level.

See 'Show Battery Meter' for more information.

Lock Now?

Immediately locks your phone, you will not be able to use your phone until the unlock code is entered. See 'Phone Lock' for more information.

Mute Phone?

Temporarily turns the microphone off during a phone call. Reselect this option to resume your conversation.

Read Messages?

Your newest message will be displayed; you can then read, delete and edit messages as normal. See 'Received Messages' for more information.

Vibrate On/Off?

VibraCall™ will be switched either on or off depending on the current setting. If VibraCall™ is switched on, the 'Ring or Vibrate' setting changes to `Vibrate Only`. If VibraCall is switched off, the 'Ring or Vibrate' setting changes to `Ring Only`. See 'OK Ring or Vibrate' for more information.

Divert On/Off?

Unconditional voice call diversion will be switched either on or off depending on the current setting. This will allow Fax and Data diversion to remain enabled independent of the Voice Call Diversion setting.

You must have defined a diversion number using the 'Divert All Voice Calls' option in the Call Diverting menu in order to use this feature.

You cannot switch call diverting on or off if you are outside network coverage.

Find Location?

You will be prompted to `Enter Location`. Enter the location number and press (OK). The first matching entry in the Phone Book will be displayed. Press (OK) to call the number.

Add to Phone?

You will be prompted to enter a phone number and then a name.

If you already had a number displayed, it will automatically be re-displayed when you select this feature.

The number will be stored in the next available phone memory location. See 'Add Entry' for more information.

Adjust Ring?

This option is used to display and to set the incoming call ring tone volume.

Switch Memory?

Switches one-touch dialling between the phone and SIM memories depending on the current setting.

Outgoing SMS?

Your newest message will be displayed; you can then read, send, delete and edit messages as normal. See 'Outgoing Messages' for more information.

Message Editor?

The last message that was edited will be displayed. Press and hold (C) to clear the message and start a new one, or modify the message displayed. See 'How to Create and Edit SMS Messages' for more information.

Received Calls?

Displays the first entry in the Last Calls Received list. You can scroll through the list and call the numbers as normal. See 'Last Calls Received' for more information.

Call Charge?

Displays the cost of your last chargeable call. See 'Show Call Charges' for more information.

Call Timer?

Displays the duration of your last chargeable call. See 'Show Call Timers' for more information.

Restrict My ID?

Your phone number will not be sent with the next attempted call; after this your phone number will be sent until you reselect this option.

Switch Line 1/2?

Availability depends on the type and settings of the SIM card, and/or your subscription to this feature.

Allows you to switch between Line 1 and Line 2.

Show Services?

Availability depends on the type and settings of the SIM card, and/or your subscription to this feature.

Displays a list of phone numbers and services provided by your Cellular Service Provider.

Show Time/Date?

Displays the current time and date.

Find New Network?

Allows you to quickly search for a new network.

Show Credit?

Allows you to quickly display the Credit Remaining.

This will only show the credit remaining if you receive the Advice of Charge service.

Adjust Contrast

Allows you to adjust the screen contrast.

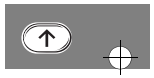

Customising the Quick Access Menu

You can change the features in the Quick Access menu to suit your personal preferences.

To customise the menu:

1 Press (↑) and scroll to the menu item you wish to change.

2 Press and hold (OK) to access the list of features available. The currently selected feature will be displayed.

3 Scroll through the list until you find the feature you wish to store in the Quick Access menu; press (OK).

4 Completed will be displayed to confirm that the feature has been stored.

The items in the Quick Access list will appear in the following order:

- Find by Name
- Find by Location
- Add Entry to Phone
- Add Entry to SIM
- Call Voicemail
- Battery Meter
- Phone Lock Now
- Phone Mute On or Off
- Ring Volume
- VibraCall On or Off
- Ringer On or Off
- Switch Memory
- Read Messages
- Outgoing Messages
- Message Editor
- Last Calls Received
- Last Call Charge
- Last Call Timer
- Restrict My ID
- Switch Line 1/2[1]
- Show Services[1]
- Divert Voice Call
- Show Time and Date
- Credit Remaining
- Find New Network
- Adjust Contrast

1. Availability depends on the type and settings of the SIM card, and/or your subscription to this feature.

Accessories

The following accessories have been designed to work with your phone. Additional accessories may be available and are packaged separately. Please refer to your local service provider or retail outlet for more information.

Desktop Charger

The Desktop Charger allows you to charge a battery fitted in a phone and a spare battery at the same time. The charging status for each battery is indicated by LEDs at the front of the charger.

The Desktop Charger must be used with the Power Adapter.

Power Adapter

The Power Adapter (charger) connects to the Desktop Charger or directly to the phone. When connected directly to the phone, it charges the battery and also provides dead battery operation.

The Power Adapter requires an appropriate Adapter Plug.

UK Adapter Plug

The UK Adapter Plug connects the Power Adapter to a UK-style mains power outlet.

European Adapter Plug

The European Adapter Plug connects the Power Adapter to a Continental European-style mains power outlet.

Aust/NZ Adapter Plug

The Australia/New Zealand Adapter Plug connects the power adapter to a Australian/New Zealand mains power outlet.

Indian Adapter Plug

The Indian Adapter Plug connects the power adapter to an Indian mains power outlet. This plug can also be used in Pakistan and Bangladesh.

Cigarette Lighter Adapter

The Cigarette Lighter Adapter connects to your phone and allows you to charge your phone's battery while driving. When the phone is in use, the adapter overrides the battery therefore preserving battery life. The adapter also provides dead battery operation.

PC Cards

CELLect™1+
CELLect™3

Both PC Cards allow you to send and receive data and fax calls using your phone and a computer with a PCMCIA Type II slot. Both PC cards also allow you to manage your phone book and send SMS messages direct from your PC with the supplied software.

The CELLect™3 card also contains a landline modem for connection to the conventional telephone network. This gives you both wired and wireless connection options in a single PC card.

A cable is required to connect the PC Cards to the phone.

Data Cable

Allows you to send and receive data and fax calls using your phone and a computer with a simple RS232 connection.

The supplied software allows you to manage your phone book and send SMS messages direct from your PC.

Personal Handsfree System

The Personal Handsfree System allows you to use your phone handsfree.

Leather Holster

The Leather Holster holds the phone while being worn on your belt.

Plastic Holster

The Plastic Holster holds the phone while being worn on your belt.

Your phone must be inserted into the plastic holster correctly for maximum protection.

Vehicle Handsfree System

There are two types of Vehicle Handsfree System :

- Standard Vehicle Handsfree System
- Advanced Vehicle Handsfree System with Voice Recognition

Both systems include a phone holder and battery charger, and provide handsfree operation. The Advanced Vehicle Handsfree System also includes the facility to store up to 20 names and numbers that can be called using voice commands.

A dual-band antenna should be specified when installing a Vehicle Handsfree System for use with dual-band phones.

These accessories require professional installation.

What to do if...

You can't switch your phone on	*Check the battery.* Is it charged, properly fitted and are the contacts clean and dry? See 'Important Battery Information'.
You can't make calls	*Check the signal strength meter in the display.* If the signal is weak, move to an open space or, if you are in a building, move closer to a window. *Check the Network Selection settings.* Try Manual Selection, or try another network. See 'Network Search'. *Check your Operator coverage map.* *Is* `Restricted` *displayed?* Check the Call Barring and Fixed Dialling settings. *Has the call charge limit been reached?* Use your PIN2 code to reset the limit or contact your Service Provider. See 'Set Total Charge Limit'. *Has a new SIM card been inserted?* Check that no new restrictions have been imposed.
You can't receive calls	*Check the signal strength meter in the display.* If the signal is weak, move to an open space or, if you are in a building, move closer to a window. *Check the Call Diversion and Call Barring settings.* *Check the Ringer and VibraCall™ settings.* If both are off, there is no audible alert. See 'OK Ring or Vibrate'.
Your phone won't unlock	*Have you inserted a new SIM card?* Enter the new PIN code. See 'Entering Your SIM Card PIN Code'. *Do you have a replacement phone?* Enter the default phone unlock code - 1234. *Have you forgotten the unlock code?* Press MENU to change the unlock code (you will need your security code).
Your PIN is blocked	*Enter the PIN unblocking code supplied with your SIM card (see 'Unblocking Your Phone').*
Your PIN2 is blocked	*Enter the PIN2 unblocking code supplied with your SIM card (see 'Change SIM PIN2 Code').*
Your SIM card won't work	*Is the card inserted the right way round? See 'SIM Card Insertion/Removal'.* *Is the gold chip visibly damaged or scratched?* Return the card to your Service Provider. *Check the SIM contacts.* If they are dirty, clean them with an antistatic cloth.

The battery won't charge	*Check the charger*. Is it properly connected? Are its contacts clean and dry? See 'Your Battery'. *Check the battery contacts.* Are they clean and dry? *Check the battery temperature.* If it is warm, let it cool before recharging. *Is it an old battery?* Battery performance will decline after several years use. Replace the battery. *Are you using a Motorola original battery?* Your charging system may not be able to communicate with your battery. See ***'Your Battery'***.
The battery icon and meter are missing	*Are you using a Motorola original battery?* Your charging system may not be able to communicate with your battery. See ***'Your Battery'***.
The battery drains faster than normal	*Are you in an area of variable coverage?* This uses extra battery power. *Is it a new battery?* A new battery will need two to three charge/discharge cycles to attain normal performance. See 'Charging a New Battery' *Is it an old battery?* Battery performance will decline after several years use. Replace the battery. *Is it a battery that hasn't been completely discharged?* Allow the battery to fully discharge (until the phone turns itself off) and then charge the battery overnight. *Check that the Frequency Of Search feature in the Network Selection menu has not been set to* `Fast` *or* `Continuous`. *See 'Network Search'.* *Check that the Battery Saving Mode feature has not been set to* `Off`. *Are you using your phone in extreme temperatures?* At extreme hot or cold temperatures, battery performance is significantly reduced.
You can't cancel Call Diverting or Call Barring	*Wait until you are in an area with good network coverage and try again.*
The ✉ symbol is flashing	*There is not enough memory available to store another SMS message*. Use the Messages menu to delete one or more existing messages.
I can't make international calls	*Some Service Providers automatically bar the ability to make international calls.* Contact your Service Provider. *Have you included the relevant codes?* Press and hold the 0+ key to display the international dialling prefix (+) and then enter the appropriate country code followed by the phone number.

Index

A

Accessories 71
Accessory setup menu 64
Add entry
  To phone memory 36, 68
  To SIM card memory 36, 68
Adjust ring volume 52
Automatic answer 64
Automatic Handsfree 64
Automatic lock 53
Automatic redial 22
Auxiliary alert 65
Available networks 59

B

Bar incoming calls 44
Bar outgoing calls 44
Batteries
  Charging 15
  Desktop charging 18
  Fitting 17
  Low battery warning 16
  Maintaining 16
  Removing 16
Battery charge indicator 14
Battery meter 40, 68
Battery saving mode 56
Blocked message 21, 55
Buttons
  Smart button 13
  Volume 13

C

Call charge settings 63
Call diverting 41, 68
Call holding 27
Call metering 61
Call meters menu 61
Call related features menu 40
Call timers 62
Call Transfer 30
Call Voicemail 47
Call waiting 27
Calling a number 22
Cancel all diverting 43, 68
Capacity
  Checking battery capacity 40
  Checking Phone Book capacity 37
Cell broadcast 50
  Messages 47
Change bar password 45
Change SIM PIN2 code 54
Change unlock code 53
Characters 34
Charge meters
  Resetting 63
Check capacity (of the Phone Book) 37
Conference Call 27
  Call Waiting 30
  End Active And Held 27
  Hold Call 26
  Make a New Call 26
  Reconnect 27
  Reconnect Held Call 27
  Restrict My Number 26
  Split Call 27
  Switch 27
Contrast
  adjusting 69

D

Delete
  Last ten calls 37
  Message 48, 49
  Phone book entries 36
Desktop charging of your battery 18
Detailed diverting 42
Dialling phone book numbers 23
Display 14
  adjusting the contrast 69
Display characters 34
Displaying your own phone number 38
Divert
  Cancelling 43
  Fax calls 42
DTX 56

E

Editing messages 47
Emergency calls 24
Ending a phone call 25
Entering characters 34
Erase name and number 36
Extended menus 4, 55, 56

F

Fault finding 73
Find entry by location 35, 68
Find entry by name 35, 67
Find new network 60
Fitting your battery 17
Fixed dialling 38
  Calling numbers 38
  Setting 39

H

Handsfree On/Off 26
Headset
  Making and receiving calls 13
Hold Call 26

I

In use symbol 14
Initiating Transfer Call 30
International phone calls 23

K

Key Answer Only 45

L

Language selection 56
Last ten calls 37, 69
Lifetime timer 63
Lock now 53, 68
Low battery warning 16

M

Making a phone call 22
Master clear 57
Master reset 56
Menus
  Accessory setup menu 64
  Call Diverting menu 41
  Call meters menu 61
  Call related features menu 40
  Extended menu 4
  Messages menu 46
  Network selection menu 58
  Options menu 31
  Personalised menus 4
  Phone Book menu 32
  Phone setup menu 52
  Quick Access menu 67
  Send Messages menu 49
  Short menu 4
Message editor 50, 69
Message settings 50
Messages
  Call holding/call waiting messages ...28
  Cell broadcast messages 47
  Creating and editing 47
  Reading SMS messages 47
  Sending SMS messages 49
Messages menu 46
Microphone
  turning on or off 13, 27
Mute Button 13
My phone number(s) 38

N

Names
  Entering 34
Network search 59
Network selection menu 58
Networks
  Automatic search 59
  Finding new networks 60
  Manual search 59
New security code 55

O

One-touch dial setting 39
One-touch dialling 23
Options menu 31
Outgoing messages 49, 69

P

Pauses
- Inserting into phone numbers 23

Personal numbers 35
Personalised menu 4
Phone book
- Call number 36
- Capacity 33
- Deleting/erasing entries 36
- Dialling phone book numbers 23
- Modify name or number 36
- Preventing access to 37
- Storing numbers - see *Add Entry* 36

Phone calls
- Automatic redial 22
- Dialling phone book numbers 23
- Emergency calls 24
- Ending 25
- International 23
- Making 22
- One-touch dialling 23
- Receiving 24

Phone setup menu 52
Phone status 56
PIN code
- Entering 21
- Setting and changing 54

PIN2 code 54
Postscripting 33
Prevent access (to Phone Book) 37

Q

Quick access menu 67
- Customising 70

R

Reading SMS messages 47
Received messages 47
Receiving a phone call 24
Redialling the last number called 23
Removing your battery 16
Require SIM card PIN 54
Restrict My Number 26
Restrict my phone number 41, 69
Return call 48
Ring or vibrate 53
Ring tones 53

S

Safety timer 65
Screen
- adjusting the contrast 69

Security code
- Changing 55

Select Phone Line 52
Sending SMS messages 49
Service centre 50
Set in-call display 62
Set Ringer Tone 53
Set Ringer Tone 2 53
Set Time and Date 56
Set Time Format 56
Setup fixed dialling 39
Short menu 4
Short message service symbol 14
Show battery meter 40, 68
Show call charges 61, 69
Show call timers 62, 69
Show Services 37
Show Time and Date 55
Signal strength symbol 14
SIM card
- Insertion/removal 20
- PIN code 21, 54
- PIN2 code 54

Smart button 13
SMS messages 46
Special keys 13
Split Call 27
Status indicator 15
Status review 56
Switch 27
Symbols 14

T

Talk and fax 43
Timers 62
Tones
- Setting ringer tones 53

Transfer Call 30
Transmission rate 43
Troubleshooting 73
Turn Mute On or Off 27

U

Unblocking your phone 54
Unconditional call diversion 68
Unlock code
  Setting and changing 53

V

VibraCall 53, 68
Voicemail
  Number 50
Volume
  Adjusting the earpiece and keypad volume 13
  Adjusting the ringer volume 52
  Buttons 13

W

What to do if... 73