SC™ 4812ET RF and Power Cabinet Hardware Installation Manual

System Software Release 2.16.0

800/1700/1900 MHz

CDMA

English
Apr 2001
68P09253A94–1

DRAFT

SC™ 4812ET RF and Power Cabinet Hardware Installation Manual

800/1700/1900 MHz

CDMA

English
Apr 2001
68P09253A94–1

MOTOROLA

SC™ 4812ET RF and Power Cabinet Hardware Installation Manual

System Software Release 2.16.0

800/1700/1900 MHz

CDMA

English
Apr 2001
68P09253A94–1

DRAFT

Notice

While reasonable efforts have been made to assure the accuracy of this document, Motorola, Inc. assumes no liability resulting from any inaccuracies or omissions in this document, or from use of the information obtained herein. The information in this document has been carefully checked and is believed to be entirely reliable. However, no responsibility is assumed for inaccuracies or omissions. Motorola, Inc. reserves the right to make changes to any products described herein and reserves the right to revise this document and to make changes from time to time in content hereof with no obligation to notify any person of revisions or changes. Motorola, Inc. does not assume any liability arising out of the application or use of any product, software, or circuit described herein; neither does it convey license under its patent rights or the rights of others.

It is possible that this publication may contain references to, or information about Motorola products (machines and programs), programming, or services that are not announced in your country. Such references or information must not be construed to mean that Motorola intends to announce such Motorola products, programming, or services in your country.

Copyrights

This instruction manual, and the Motorola products described in this instruction manual may be, include or describe copyrighted Motorola material, such as computer programs stored in semiconductor memories or other media. Laws in the United States and other countries preserve for Motorola certain exclusive rights for copyrighted material, including the exclusive right to copy, reproduce in any form, distribute and make derivative works of the copyrighted material. Accordingly, any copyrighted Motorola material contained herein or in the Motorola products described in this instruction manual may not be copied, reproduced, distributed, merged or modified in any manner without the express written permission of Motorola. Furthermore, the purchase of Motorola products shall not be deemed to grant either directly or by implication, estoppel, or otherwise, any license under the copyrights, patents or patent applications of Motorola, as arises by operation of law in the sale of a product.

Usage and Disclosure Restrictions

License Agreement

The software described in this document is the property of Motorola, Inc. It is furnished by express license agreement only and may be used only in accordance with the terms of such an agreement.

Copyrighted Materials

Software and documentation are copyrighted materials. Making unauthorized copies is prohibited by law. No part of the software or documentation may be reproduced, transmitted, transcribed, stored in a retrieval system, or translated into any language or computer language, in any form or by any means, without prior written permission of Motorola, Inc.

High Risk Activities

Components, units, or third–party products used in the product described herein are NOT fault–tolerant and are NOT designed, manufactured, or intended for use as on–line control equipment in the following hazardous environments requiring fail–safe controls: the operation of Nuclear Facilities, Aircraft Navigation or Aircraft Communication Systems, Air Traffic Control, Life Support, or Weapons Systems (“High Risk Activities”). Motorola and its supplier(s) specifically disclaim any expressed or implied warranty of fitness for such High Risk Activities.

Trademarks

and Motorola are registered trademarks of Motorola, Inc.

Product and service names profiled herein are trademarks of Motorola, Inc. Other manufacturers’ products or services profiled herein may be referred to by trademarks of their respective companies.

Copyright

© Copyright 2000 Motorola, Inc.
All Rights Reserved

Printed on
Recyclable Paper

REV010598

SPECIFICATIONS SUBJECT TO CHANGE WITHOUT NOTICE

MOTOROLA

Table of Contents

SC™ 4812ET RF and Power Cabinet Hardware Installation Manual

Release 2.16.0

This manual includes...

Chapter	Version	Description	Page
Front	V00.04	Foreword, General Safety, Revision History, Patent Notification	3
1	V01.03	Introduction	13
2	V02.03	Site Preparation	33
3	V03.03	How to Unpack the SC 4812ET BTS	59
4	V04.03	Cabinet Mounting	67
5	V05.03	Cabinet Cabling	81
6	V06.03	What's Next and Cleanup	119
A	V0A.03	Installing RGPS	123
B	VOB.03	Cabinet Specifications	127
C	VOC.03	Hardware Installation Quickstart	137
D	VOD.03	SC 4812ET/SC 614 BTS Power Sharing	145
E	V0F.02	SC 4812ET – SC 614/SC 614T Companion Frame Installation	157
F	V0F.02	SC 4812ET to SC 4812ET Power Sharing	169
G	VOG.01	SC 4812ET – SC 4812ET Companion Frame Installation	185
H	VOH.01	Installing RF GPS	181
I	VOI.01	Minimum Requirements for CSU	185
	Index		189

DRAFT

Foreword

Scope of manual

This manual is intended for use by cellular telephone system craftspersons in the day-to-day operation of Motorola cellular system equipment and ancillary devices. It is assumed that the user of this information has a general understanding of telephony, as used in the operation of the Public Switched Telephone Network (PSTN), and is familiar with these concepts as they are applied in the cellular mobile/portable radiotelephone environment. The user, however, is not expected to have any detailed technical knowledge of the internal operation of the equipment.

This manual is not intended to replace the system and equipment training offered by Motorola, although it can be used to supplement or enhance the knowledge gained through such training.

Text conventions

The following special paragraphs are used in this manual to point out information that must be read. This information may be set-off from the surrounding text, but is always preceded by a bold title in capital letters. The four categories of these special paragraphs are:

NOTE

Presents additional, helpful, non-critical information that you can use.

IMPORTANT

Presents information to help you avoid an undesirable situation or provides additional information to help you understand a topic or concept.

CAUTION

Presents information to identify a situation in which equipment damage could occur, thus avoiding damage to equipment.

WARNING

Presents information to warn you of a potentially hazardous situation in which there is a possibility of personal injury.

. . . continued on next page

DRAFT

The following typographical conventions are used for the presentation of software information:

- In text, sans serif **BOLDFACE CAPITAL** characters (a type style without angular strokes: i.e., SERIF versus SANS SERIF) are used to name a command.
- In text, `typewriter` style characters represent prompts and the system output as displayed on an operator terminal or printer.
- In command definitions, sans serif **boldface** characters represent those parts of the command string that must be entered exactly as shown and `typewriter` style characters represent command output responses as displayed on an operator terminal or printer.
- In the command format of the command definition, `typewriter` style characters represent the command parameters.

Changes to manual

Changes that occur after the printing date are incorporated into your manual by Cellular Manual Revisions (CMRs). The information in this manual is updated, as required, by a CMR when new options and procedures become available for general use or when engineering changes occur. The cover sheet(s) that accompany each CMR should be retained for future reference. Refer to the Revision History page for a list of all applicable CMRs contained in this manual.

Receiving updates

Technical Education & Documentation (TED) maintains a customer database that reflects the type and number of manuals ordered or shipped since the original delivery of your *Motorola* equipment. Also identified in this database is a “key” individual (such as Documentation Coordinator or Facility Librarian) designated to receive manual updates from TED as they are released.

To ensure that your facility receives updates to your manuals, it is important that the information in our database is correct and up-to-date. Therefore, if you have corrections or wish to make changes to the information in our database (i.e., to assign a new *“key” individual*), please contact Technical Education & Documentation at:

MOTOROLA, INC.
Technical Education & Documentation
1 Nelson C. White Parkway
Mundelein, Illinois 60060
U.S.A.

Phone:
Within U.S.A. and Canada 800-872-8225
Outside of U.S.A. and Canada . . +1-847-435–5700
FAX: . . . . . +1-847-435–5541

. . . continued on next page

DRAFT

Reporting manual errors

In the event that you locate an error or identify a deficiency in your manual, please take time to write to us at the address above. Be sure to include your name and address, the complete manual title and part number (located on the manual spine, cover, or title page), the page number (found at the bottom of each page) where the error is located, and any comments you may have regarding what you have found. We appreciate any comments from the users of our manuals.

24-hour support service

If you have any questions or concerns regarding the operation of your equipment, please contact the Customer Network Resolution Center for immediate assistance. The 24 hour telephone numbers are:

Arlington Heights, IL 800–433–5202
Arlington Heights, International . +1–847–632–5390
Cork, Ireland 44–1793–565444
Swindon, England 44–1793–565444

DRAFT

Remember! . . . Safety depends on you!!

The following general safety precautions must be observed during all phases of operation, service, and repair of the equipment described in this manual. Failure to comply with these precautions or with specific warnings elsewhere in this manual violates safety standards of design, manufacture, and intended use of the equipment. Motorola, Inc. assumes no liability for the customer's failure to comply with these requirements. The safety precautions listed below represent warnings of certain dangers of which we are aware. You, as the user of this product, should follow these warnings and all other safety precautions necessary for the safe operation of the equipment in your operating environment.

Ground the instrument

To minimize shock hazard, the equipment chassis and enclosure must be connected to an electrical ground. The BTS **must be connected** to a permanent terminal, and not via a plug to ensure a firm ground at all times.

Do not operate in an explosive atmosphere

Do not operate the equipment in the presence of flammable gases or fumes. Operation of any electrical equipment in such an environment constitutes a definite safety hazard.

Keep away from live circuits

Operating personnel must:

- not remove equipment covers. Only Factory Authorized Service Personnel or other qualified maintenance personnel may remove equipment covers for internal subassembly, or component replacement, or any internal adjustment.
- not replace components with power cable connected. Under certain conditions, dangerous voltages may exist even with the power cable removed.
- always disconnect power and discharge circuits before touching them.

Do not service or adjust alone

Do not attempt internal service or adjustment, unless another person, capable of rendering first aid and resuscitation, is present.

Do not substitute parts or modify equipment

Because of the danger of introducing additional hazards, do not install substitute parts or perform any unauthorized modification of equipment. Contact Motorola Warranty and Repair for service and repair to ensure that safety features are maintained.

DRAFT

Dangerous procedure warnings

Warnings, such as the example below, precede potentially dangerous procedures throughout this manual. Instructions contained in the warnings must be followed. You should also employ all other safety precautions that you deem necessary for the operation of the equipment in your operating environment.

WARNING

Dangerous voltages, capable of causing death, are present in this equipment. Use extreme caution when handling, testing, and adjusting.

DRAFT

Manual Number

68P09253A94

Manual Title

SC™ 4812ET RF and Power Cabinet Hardware Installation Manual

Version Information

The following table lists the manual version, date of version, and remarks on the version.

Version Level	Date of Issue	Remarks
1	Apr 2001	Original draft from engineering

DRAFT

Patent Notification

Patent numbers

This product is manufactured and/or operated under one or more of the following patents and other patents pending:

4128740	4661790	4860281	5036515	5119508	5204876	5247544	5301353
4193036	4667172	4866710	5036531	5121414	5204977	5251233	5301365
4237534	4672657	4870686	5038399	5123014	5207491	5255292	5303240
4268722	4694484	4872204	5040127	5127040	5210771	5257398	5303289
4282493	4696027	4873683	5041699	5127100	5212815	5259021	5303407
4301531	4704734	4876740	5047762	5128959	5212826	5261119	5305468
4302845	4709344	4881082	5048116	5130663	5214675	5263047	5307022
4312074	4710724	4885553	5055800	5133010	5214774	5263052	5307512
4350958	4726050	4887050	5055802	5140286	5216692	5263055	5309443
4354248	4729531	4887265	5058136	5142551	5218630	5265122	5309503
4367443	4737978	4893327	5060227	5142696	5220936	5268933	5311143
4369516	4742514	4896361	5060265	5144644	5222078	5271042	5311176
4369520	4751725	4910470	5065408	5146609	5222123	5274844	5311571
4369522	4754450	4914696	5067139	5146610	5222141	5274845	5313489
4375622	4764737	4918732	5068625	5152007	5222251	5276685	5319712
4485486	4764849	4941203	5070310	5155448	5224121	5276707	5321705
4491972	4775998	4945570	5073909	5157693	5224122	5276906	5321737
4517561	4775999	4956854	5073971	5159283	5226058	5276907	5323391
4519096	4797947	4970475	5075651	5159593	5228029	5276911	5325394
4549311	4799253	4972355	5077532	5159608	5230007	5276913	5327575
4550426	4802236	4972432	5077741	5170392	5233633	5276915	5329547
4564821	4803726	4979207	5077757	5170485	5235612	5278871	5329635
4573017	4811377	4984219	5081641	5170492	5235614	5280630	5339337
4581602	4811380	4984290	5083304	5182749	5239294	5285447	D337328
4590473	4811404	4992753	5090051	5184349	5239675	5287544	D342249
4591851	4817157	4998289	5093632	5185739	5241545	5287556	D342250
4616314	4827507	5020076	5095500	5187809	5241548	5289505	D347004
4636791	4829543	5021801	5105435	5187811	5241650	5291475	D349689
4644351	4833701	5022054	5111454	5193102	5241688	5295136	RE31814
4646038	4837800	5023900	5111478	5195108	5243653	5297161	
4649543	4843633	5028885	5113400	5200655	5245611	5299228	
4654655	4847869	5030793	5117441	5203010	5245629	5301056	
4654867	4852090	5031193	5119040	5204874	5245634	5301188	

DRAFT

MOTOROLA

Chapter 1: Introduction

This section includes...

Product Description 14
Scope of this Document 14
Manual Overview 14
Recommended Documents 15
Acronyms 16
Installation Hardware 18
Recommended Tools 20
Materials Available from Motorola 21
RF Cabinet External FRUs 23
RF Cabinet Internal FRUs 25
Power Cabinet 27
Power Cabinet Internal FRUs 28
Enclosure Dimensions 29
Enclosure Clearances 30

Tables

Table 1-1: Acronyms 16
Table 1-2: Installation Hardware Supplied with Cabinets 18
Table 1-3: Recommended Tools 20
Table 1-4: Cables, Tools and Hardware 21
Table 1-5: Cabinet Dimension 29

Figures

Figure 1-1: SC 4812ET Installation Hardware 19
Figure 1-2: SC 4812ET RF Cabinet 22
Figure 1-3: RF Cabinet External FRUs 23
Figure 1-4: SC 4812ET LPAs 23
Figure 1-5: External Blower Assembly (EBA) 24
Figure 1-6: RF Cabinet Internal FRUs 25
Figure 1-7: Power Cabinet 27
Figure 1-8: Power Cabinet with Batteries Installed 28
Figure 1-9: Minimum Cabinet Clearances 30
Figure 1-10: Min. Site Clearances for SC 4812ET Cabinets . . 31

DRAFT

Product Description

The SC 4812ET BTS consists of an RF Cabinet that is an outdoor, weatherized version of the SC 4812T. The RF cabinet is powered by 27 VDC and each cabinet has the capability to support up to 4 carriers (at 3 sector) or 2 carriers (at 6 sector). An optional outdoor, weatherized Power Cabinet that provides AC/DC rectified power and battery back–up is also available. An air to air heat exchanger is used for conditioning each cabinet, except in the LPA area of the RF cabinet which uses blower fans to draw outside air over the LPAs.

The SC 4812T utilizes a new RF "Trunking" technique that provides shared power between sectors and increased RF output capability. The SC 4812ET will support additional expansion cabinets to add more carriers. Duplexer/Directional couplers will be standard equipment for the SC 4812ET BTS.

The RF Cabinet houses the fan modules, Combined CDMA Channel Processor shelf (C–CCP), Linear Power Amplifiers (LPA) modules, LPA trunking backplane, Bandpass 2:1 & 4:1 Combiners, Duplexer/Receive Filter/Directional Couplers (DRDC) and a DC Power distribution assembly. The Power Cabinet (PC) provides +27 V DC distribution and battery backup for the SC 4812ET. The Power Cabinet houses batteries, battery heaters, rectifiers, an AC Load Center (ACLC), a power distribution assembly, and two duplexed GFCI convenience outlets.

Scope of This Document

This document provides information pertaining to the installation of the Motorola SC™4812ET CDMA Base Transceiver Subsystem (BTS) and optional equipment. The basic frame installation is described in the RF and Power Cabinet mounting chapter. Expansion cabinet information will be included in future manual revisions.

For detailed installation information of non–Motorola equipment, refer to the vender manuals provided with such equipment.

Manual Overview

Chapter 1 – "Introduction" – This chapter describes manual contents, recommended documents, supplied and recommended tools and hardware, and equipment identification.

Chapter 2 – "Site preparation" – This chapter details preparing the site (concrete pad, rooftop, etc.) for RF and Power Cabinet installation, location considerations, pad and roof mounting instructions, and ground system information.

Chapter 3 – "How to Unpack the SC 4812ET BTS" – This chapter contains information on how to unpack the RF and Power Cabinet and how to inspect for damage.

DRAFT

Chapter 4 – “Cabinet Mounting” – This chapter covers cabinet preparation, rooftop (elevated) and concrete pad mounting, and battery installation.

Chapter 5 – “Cabinet Cabling” – This chapter contains procedures for cabling the RF and Power Cabinet. This includes earth ground, alarm & span line, RGPS, RF GPS, LFR, RF, AC power, DC power, and other cabling considerations.

Chapter 6 – “What’s Next and Cleanup” – This chapter includes site cleanup and a pre–optimization checklist.

Appendix A – “Installing RGPS”— This appendix covers the mounting and installation of the RGPS hardware.

Appendix B – “Cabinet Specifications”— This appendix covers the basic specifications of the SC 4812ET RF Cabinet and Power Cabinet.

Appendix C – “Installation Quickstart” – A quick reference quide to the installation of the SC 4812ET BTS.

Appendix D – “SC 4812ET/SC 614 BTS DC Power Sharing” – This appendix covers the instructions for powering both the SC 4812ET RF Cabinet and the SC 614T BTS from one SC 4812ET Power Cabinet.

Appendix E – “SC 4812ET – SC 614/SC 614T Companion Frame Installation” – This appendix covers the instructions for converting the existing SC 614T site from a starter frame to an expansion frame.

Appendix F – “SC 4812ET to SC 4812ET DC Power Sharing” – This appendix covers the instructions for cabling a SC 4812ET Power Cabinet to two 4812ET RF Cabinets.

Appendix G – “SC 4812ET – SC 4812ET Companion Frame Installation” – This appendix covers the instructions for connecting a starter frame to an expansion frame.

Appendix H –“Installing RF GPS”

Appendix I – “Minimum Requirements for Customer purchased CSU”

Recommended Documents

The following documents are recommended to perform the installation of the cell site equipment:

- *SC 4812ET CDMA Optimization* (Motorola part number 68P09253A74)
- *SC 4812ET Field Replaceable Unit (FRU) Identification Guide* (Motorola part number 68P09253A48)

DRAFT

- Site Document (generated by Motorola Systems Engineering) which includes:
  - trial specific documentation
  - channel allocation
  - contact list (customer)
  - ancillary/expendable equipment list
  - site wiring lists
  - card placement
  - contact list (Motorola support)
  - job box inventory
- Demarcation Document (Scope of Work agreement)
- *Grounding Guidelines for Cellular Radio Installations* (Motorola part number 68P81150E62)
- Installation manuals for non-Motorola equipment (for reference purposes only).

Acronyms

Table 1-1 defines the acronyms used in this manual.

Table 1-1: Acronyms

Acronym	Definition
AMR	Alarm Monitoring and Reporting Card
AWG	American Wire Gauge
BBX–1X	Broadband Transceiver Cards
BSS	Base Station System
BTS	Base Transceiver Subsystem
BSWG	British Standard Wire Gauge
CBSC	Centralized Base Station Controller
CCD	CDMA Clock Distribution card
C–CCP	Combined CDMA Channel Processor
CDMA	Code Division Multiple Access
CHI	Concentration Highway Interface
CIO	Combiner Input/Output
CSM	Clock Synchronization Manager
CSU	Channel Service Unit
DRDC	Duplexer/Receiver Filter/Directional Coupler
DS1	One Time Slot on T1 Span Line
EBA	External Blower Assembly
EMX	Electronic Mobile Exchange
EMPC	Expansion Multicoupler Preselector Card

. . . continued on next page

DRAFT

Table 1-1: Acronyms	
Acronym	**Definition**
EMPC6	Expansion Multicoupler Preselector Card (for 6–sector)
ETIB	SC 4812ET Interface Board
FRU	Field Replaceable Unit
GLI2	Group Line Interface 2
GPS	Global Positioning Subsystem
GFCI	Ground Fault Circuit Interrupter
HSO	High Stability Oscillator
HSOX	High Stability Oscillator Expansion Board
IIP3	Input Intercept Point
ISB	Inter–shelf Bus
LAPD	Link Access Protocol “D”
LAN	Local Area Network
LPA	Linear Power Amplifier
LPAC	LPA Control Board
LFR	Low Frequency Receiver
LMF	Local Maintenance Facility
MCC–1X	Multi–channel CDMA Card
MMI	Man–Machine Interface
MPC	Multicoupler/Preselector Card
MGB	Main Ground Bar
OSP	Outside plant
PB	Punch Block
PCSC	Personal Communications Switching Center
PSTN	Public Switched Telephone Network
PN	Pseudo–Random Noise
POTS	Plain Old Telephone System
PS	Power Supply
RGD	Remote GPS Distribution
RGPS	Remote Global Positioning System (GPS) Receiver
RFDS	Radio Frequency Diagnostic Subsystem
RX	Receive
SS	Stainless Steel
SAPB	Stand Alone Pilot Beacon
STLPA	Single Tone Linear Power Amplifier
STRAU	SuperCell Transcoder Rate Adaption Unit
TCH	Traffic Channel

DRAFT

Installation Hardware

Table 1-2 shows the quantity and description of the installation hardware that is shipped with the RF Cabinet and with the Power Cabinet. Figure 1-1 is a template guide for identifying the parts.

Table 1-2: Installation Hardware Supplied with Cabinets

RF	Power	Description
1	1	7/16” Hex Tool
1	1	ESD Wrist Strap
4	4	Cabinet Mounting Brackets
8	8	M12 x 30 Bolts (for Mounting Brackets)
4	4	Insulating Shoulder Washer (for Mounting Bolts)
4	4	5/8” Bolts (to replace eye bolts)
1	1	Compression Lug (for #2 AWG Ground Wire)
2	2	M6 Stainless Steel Locking Hex Nuts (for Ground Lug)
4	4	M12 x 100 Bolt
4	16	M12 Flat Washer
4	4	M12 Lock Washer
4	4	M12 Nut
1	1	Motorola Ivory Touch–Up Paint
2	2	M6 Flat Washer
6	6	M10 Nut
6	6	M10 Flat Washer
6	6	M10 Lock Washer
4	4	5/8” Flat Washer
4	4	Large Flat Washer
1	–	Weatherseal Bushing and Nut for RGPS Cable
1	–	MMI Cable
–	12	Battery Terminal Straps
–	3	#2/0 AWG INS WELD Cable (Red)
–	3	#2/0 AWG INS WELD Cable (Black)
–	12	90° Compression Lug (for #2/0 AWG DC Cable)
–	1	Twisted Pair Cable (for Power Cabinet Alarms to RF Cabinet)

DRAFT

Figure 1-1: SC 4812ET Installation Hardware

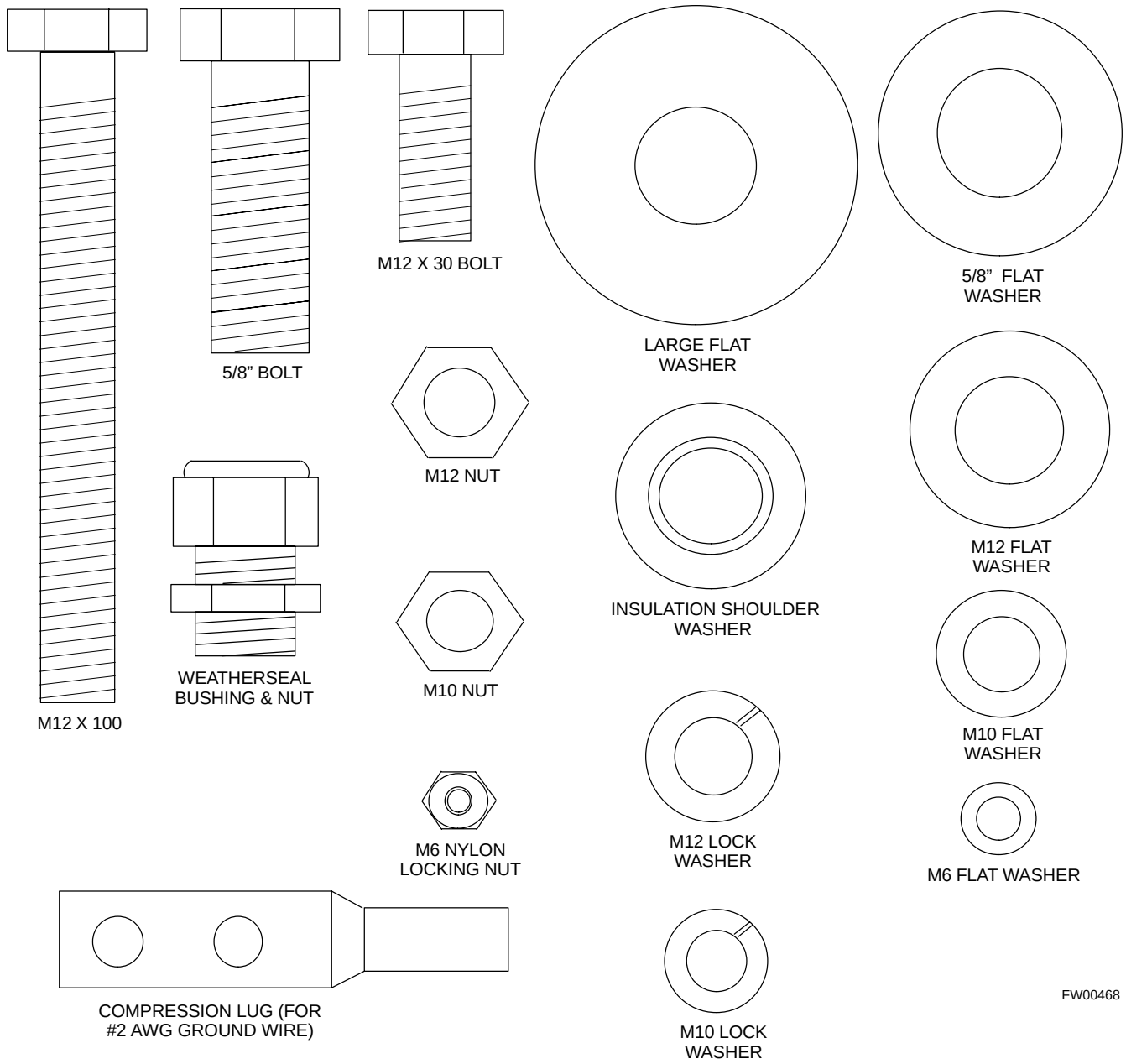

DRAFT

Recommended Tools

Table 1-3 lists tools recommended for installing RF and Power Cabinets.

Table 1-3: Recommended Tools

Item	Tool Description
1	Tin Snips
2	Wire Brush
3	Knife or Scissors
4	10 mm Nut Driver
5	19 mm (3/4”) Open ended Torque Wrench (for N–type connector)
6	110 Style Punch Block Termination Tool
7	Thomas & Betts TBM14 Hydraulic crimping tool with color keyed crimp die set (or equivalent)
8	Drill Motor
9	18 mm (11/16”) Masonry Drill Bit
10	Ratchet Handle with 19 mm (3/4”) Socket (Deep Socket or Ratchet Extension required).
11	Torque Driver (Torque Range: 5–135 N–m [4–100 ft–lbs]) with 19 mm (3/4”) and 10 mm Socket
12	Torque wrench for SMA’s Mountz Inc. MTBN2 (Part number 020314) with 5/16” open end head (Part number 020402).
13	Copper–based Conductive Grease (Berndy “Penetrox” or equivalent).

DRAFT

Materials Available from Motorola

Table 1-4 lists tools and materials available from Motorola. The items are identified by the Motorola assigned part number and include a brief description. These items can be ordered from your sales account team.

Table 1-4: Cables, Tools, and Hardware

Material	Part Number	Description
Cables	CGDSRG142BU	RG – 142 COAX by the foot
	SGDN4232A	1/2” LDF Heliax by the foot
	SGDN4234A	7/8” LDF Heliax by the foot
	SGDN4235A	1–1/4” LDF Heliax by the foot
	SGDN4233A	1–5/8” LDF Heliax by the foot
	CGDSFSJ450B	1/2” Superflex Heliax by the foot
	CGDSFSJ150A	1/4” Superflex Heliax by the foot
	CGTDN7023A	Transmission Line Kit for 1/2” LDF Heliax
	CGTDN7025A	Transmission Line Kit for 7/8” LDF Heliax
	CGTDN7027A	Transmission Line Kit for 1–5/8” LDF Heliax
	CGDS241148	1/2” Superflex Jumper – 30 ft. (1 N Male terminated, 1 N Male non–terminated)
	CGDSICPVC25FT	25 Twisted pair cable – 24 AWG
Tools	CGDS237776	110 Punchdown Tool (Handle only)
	CGDS237176	Replacement Blade for use with 110 Punchdown Tool
	CGDSTBM25S	Crimp Tool for Compression Lug
Hardware	CGDS97400036	Earthquake Expansion type Anchor Bolt

DRAFT

Overview

The major components which make up the Motorola SC 4812ET RF Cabinet (see Figure 1-2) and Power Cabinet (see Figure 1-7) system are illustrated in this section.

CAUTION

A service tent [reference: Pelsue Cabinet Mounted Service Tent; Pelsue (800–525–8460) P/N CM564866M] must be in place prior to opening the main doors of the SC 4812ET RF or Power Cabinet during times of inclement weather (rain, snow, sleet, or hail). This will prevent moisture from being drawn into the electronics by internal fans and damaging the equipment.

A service tent [reference: Pelsue Cabinet Mounted Service Tent; Pelsue (800–525–8460) P/N CM564866M] with a heater is required to service the SC 4812ET RF Cabinet when temperatures are below –10 degrees C (14 degrees F). Temperatures inside the tent should be above 0 degrees C (32 degrees F) prior to opening the main cabinet door. This will prevent a rapid temperature change to the electronics which could result in site outage.

Figure 1-2: SC 4812ET RF Cabinet

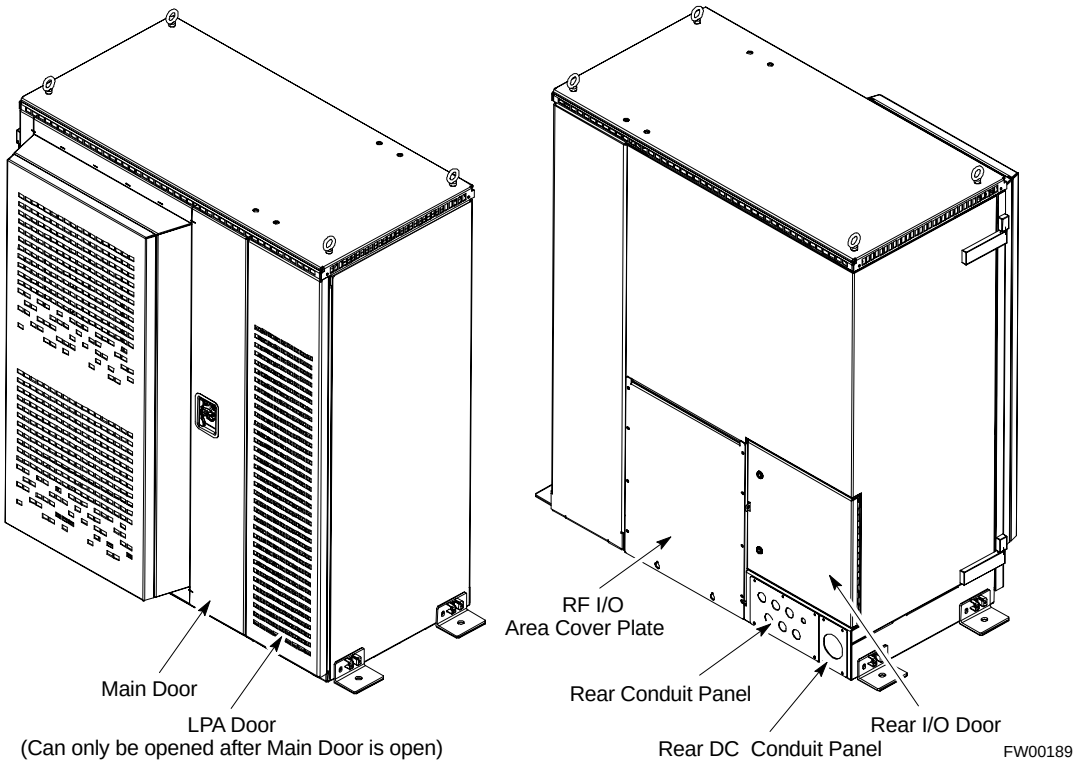

DRAFT

RF Cabinet External FRUs

Figure 1-3 shows the location of the External Field Replaceable Units in the RF Cabinet. A brief description of each External FRU is found in the following paragraphs.

Figure 1-3: RF Cabinet External FRUs

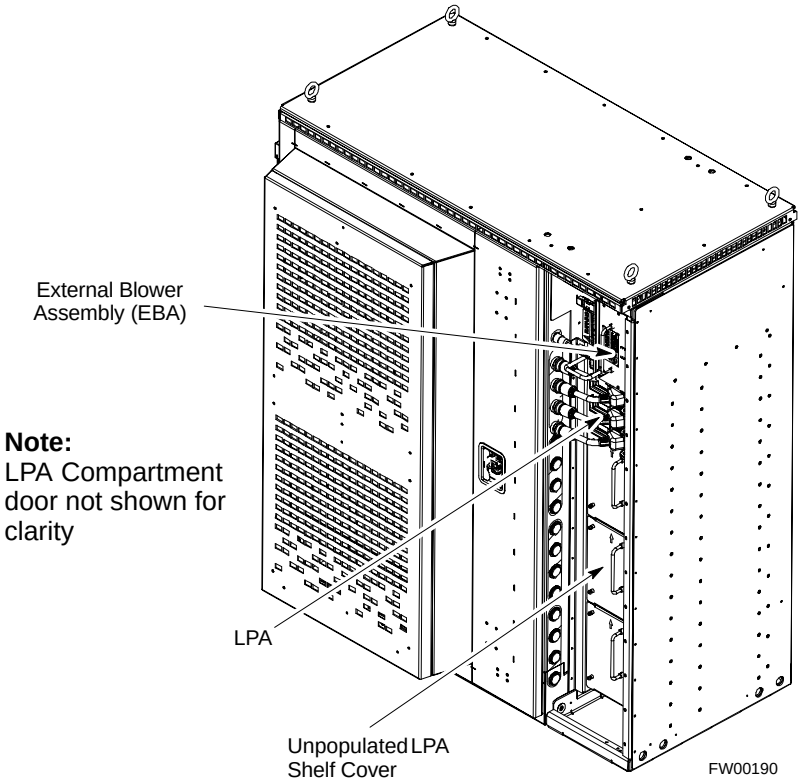

Linear Power Amplifier (LPA)

The LPA (See Figure 1-4) amplifies RF signals for transmission via the antenna. The SC 4812ET can accommodate up to 16 LPA's. The actual number of LPA's present depends upon RF Cabinet configuration.

Figure 1-4: SC4812ET LPA

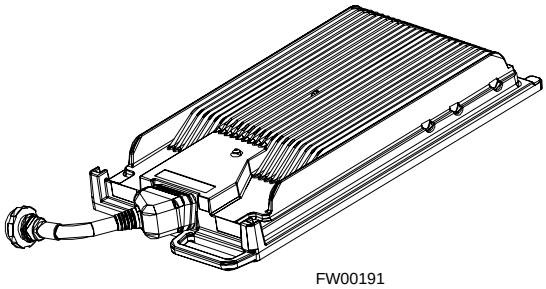

. . . continued on next page

DRAFT

External Blower Assembly (EBA)

The External Blower Assembly (see Figure 1-5) is a modular unit that provides cooling to the LPA's, two blowers are used in the RF Cabinet.

CAUTION

The EBA contains two blowers and provides cooling that is **VITAL** to prevent service outage and possible damage to the LPAs. Since the SC 4812ET can continue to operate normally with one functional blower in the EBA, the EBA should not be removed until the replacement EBA is onsite. Then, the EBA is replaced as a unit while the RF cabinet is running. The replacement must be done within 3 minutes to prevent damage to the LPAs. Refer to the SC 4812ET FRU Guide for details regarding FRU replacement.

Figure 1-5: External Blower Assembly (EBA)

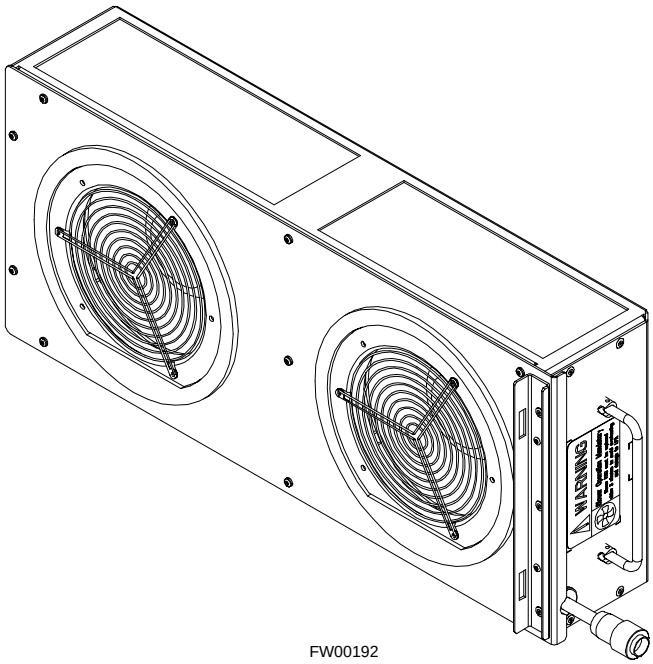

DRAFT

RF Cabinet Internal FRUs

Figure 1-6 shows the location of the Internal Field Replaceable Units. A brief description of each Internal FRU is found in the following paragraphs.

Figure 1-6: RF Cabinet Internal FRUs

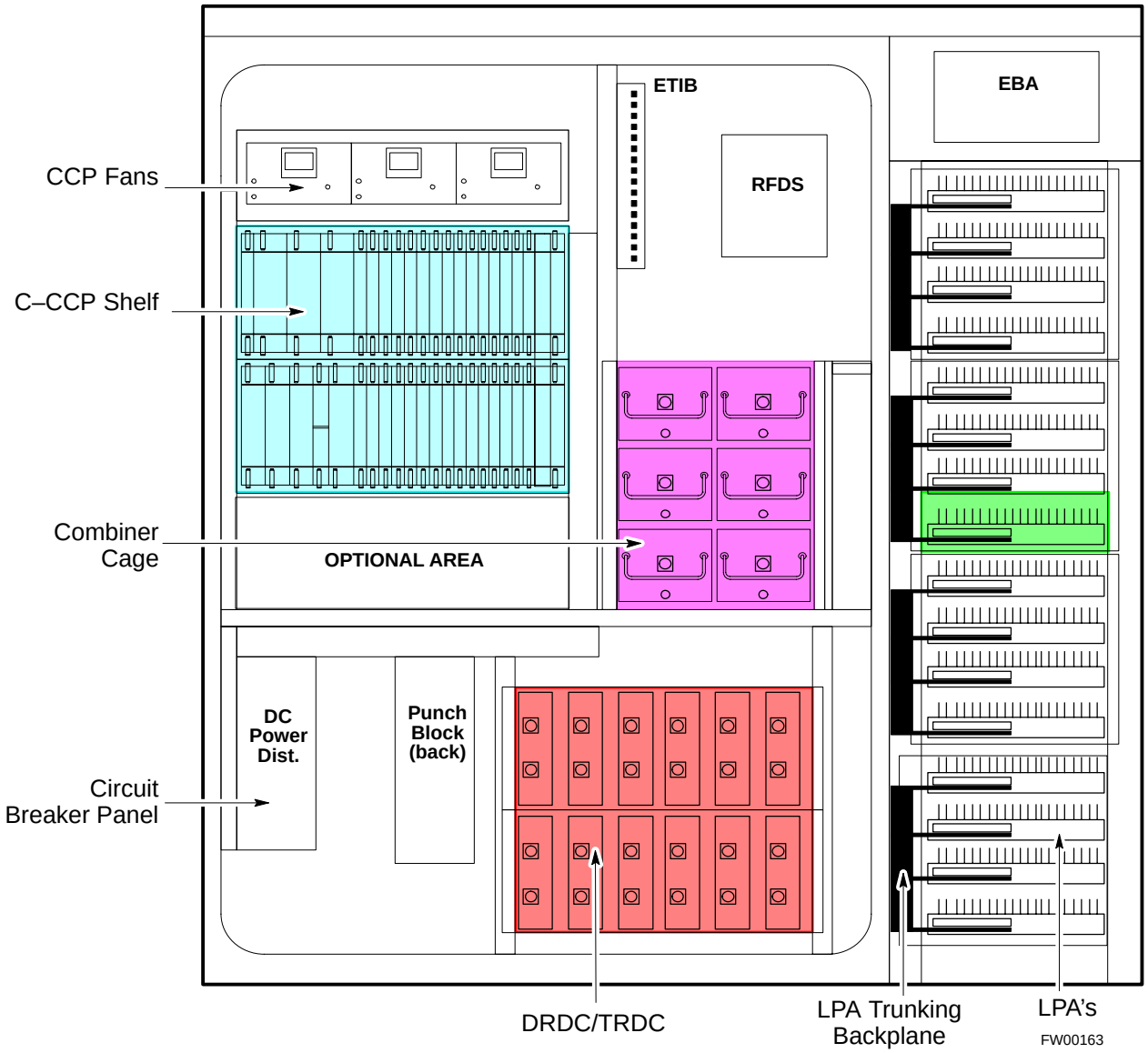

Duplexer/Directional Coupler (DRDC)

The DRDC combines, in a single module, the functions of antenna duplexing, receive band pass filtering, and surge protection.

TX Filter/RX Filter/Directional Coupler (TRDC)

The TRDC is the same as the DRDC but has a separate antenna connector for TX and RX operation. The TRDC is not available in the 1.9 GHz band.

. . . continued on next page

DRAFT

Combiner Cage (2:1, 4:1, or Band pass Filter)

The Combiner Cage holds the transmit band pass filters, 2:1 combiners, or 4:1 combiners, depending on system configuration.

Combined CDMA Channel Processor (C–CCP) Shelf

The C–CCP shelf contains the following:

- High Stability Oscillator (HSO)/LFR (Optional) card
- Clock Synchronization Manager (CSM) on 2 cards (one with GPS receiver if ordered).
- CDMA Clock Distribution (CCD) cards (2)
- Power Supply cards (2 minimum, 3 maximum)
- Multicoupler Preselector Cards (MPC) (2)
- Alarm Monitoring and Reporting (AMR) cards (2)
- Multi Channel CDMA [MCC–1X (8E or 24), MCC–1X (8E/24)] cards (up to 12)
- Broadband Transceiver (BBX–1X) cards (up to 13)
- Combined Input/Output (CIO) (1)
- Group Line Interface (GLI2) cards (2)
- BBX2 Switch card (1)
- Modem (optional)
- Filler Panels
- Fan Module (3)

Punch Block

The Punch Block is the interface point of the RF Cabinet between the T1/E1 span lines, the Customer I/O, alarms, multi–cabinet timing (RGPS and RHSO), and Pilot Beacon control (optional).

Span I/O Board

The Span I/O Board provides the interface for the span lines from the CSU to the C–CCP backplane.

RF Diagnostic Subsystem (RFDS)

The RFDS provides the capability for remotely monitoring the status of the SC 4812ET RF Transmit and Receive paths.

SC 4812ET Interface Board (ETIB) & LPA Control Brd (LPAC)

The ETIB is an interconnect board showing status LEDs for the RF Cabinet, as well as providing secondary surge protection. The LPAC board provides the interface for the LPA connection.

SC 4812ET Trunking Backplane

The Trunking Backplane contains a complex passive RF network that allows RF signals to share the resources of a bank of four LPAs. It also provides DC Power and digital interconnect.

DRAFT

Heat Exchanger

The Heat Exchanger provides cooling to the internal compartment of the RF Cabinet. The fan speed of the heat exchangers adjusts automatically with temperature. The Heat Exchanger is located in the primary front door of the RF Cabinet.

Power Cabinet

Figure 1-7 illustrates the Power Cabinet design.

Figure 1-7: Power Cabinet

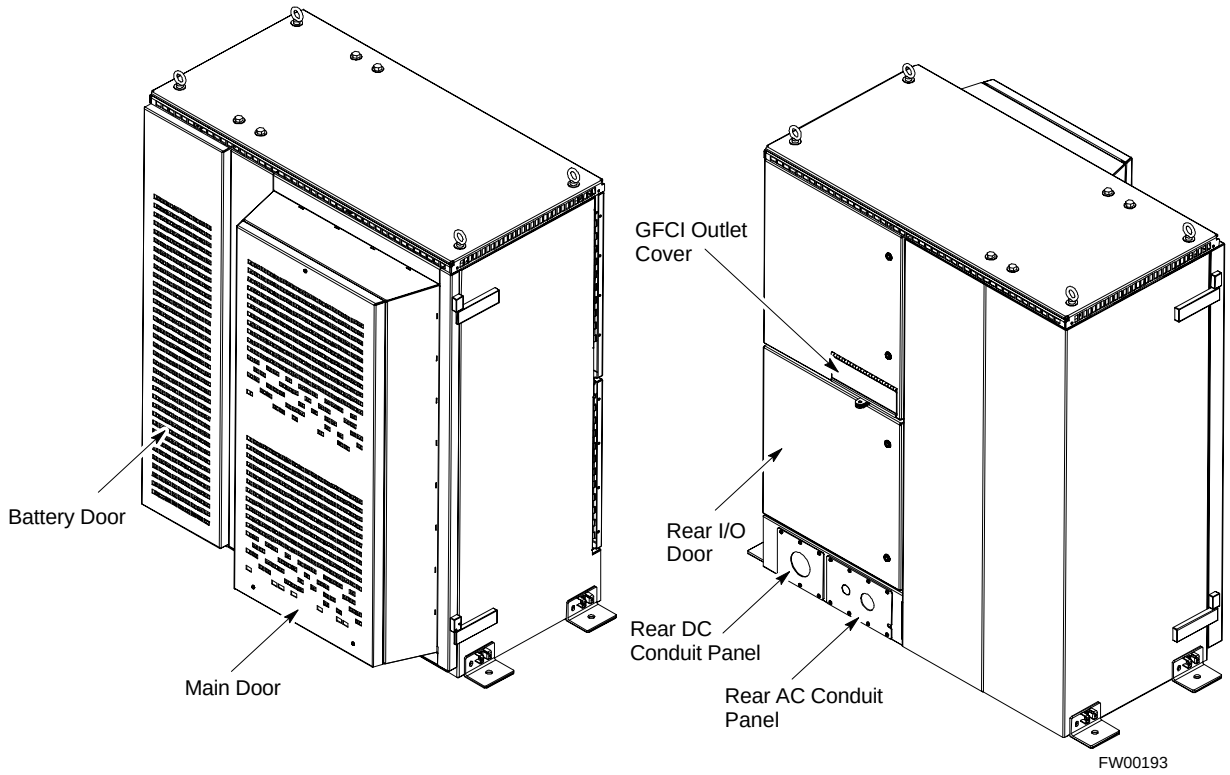

DRAFT

Power Cabinet Internal FRUs

Figure 1-8 shows the location of the Internal Field Replaceable Units. The FRUs are described in the following paragraphs.

Figure 1-8: Power Cabinet with Batteries Installed (Doors Removed for Clarity)

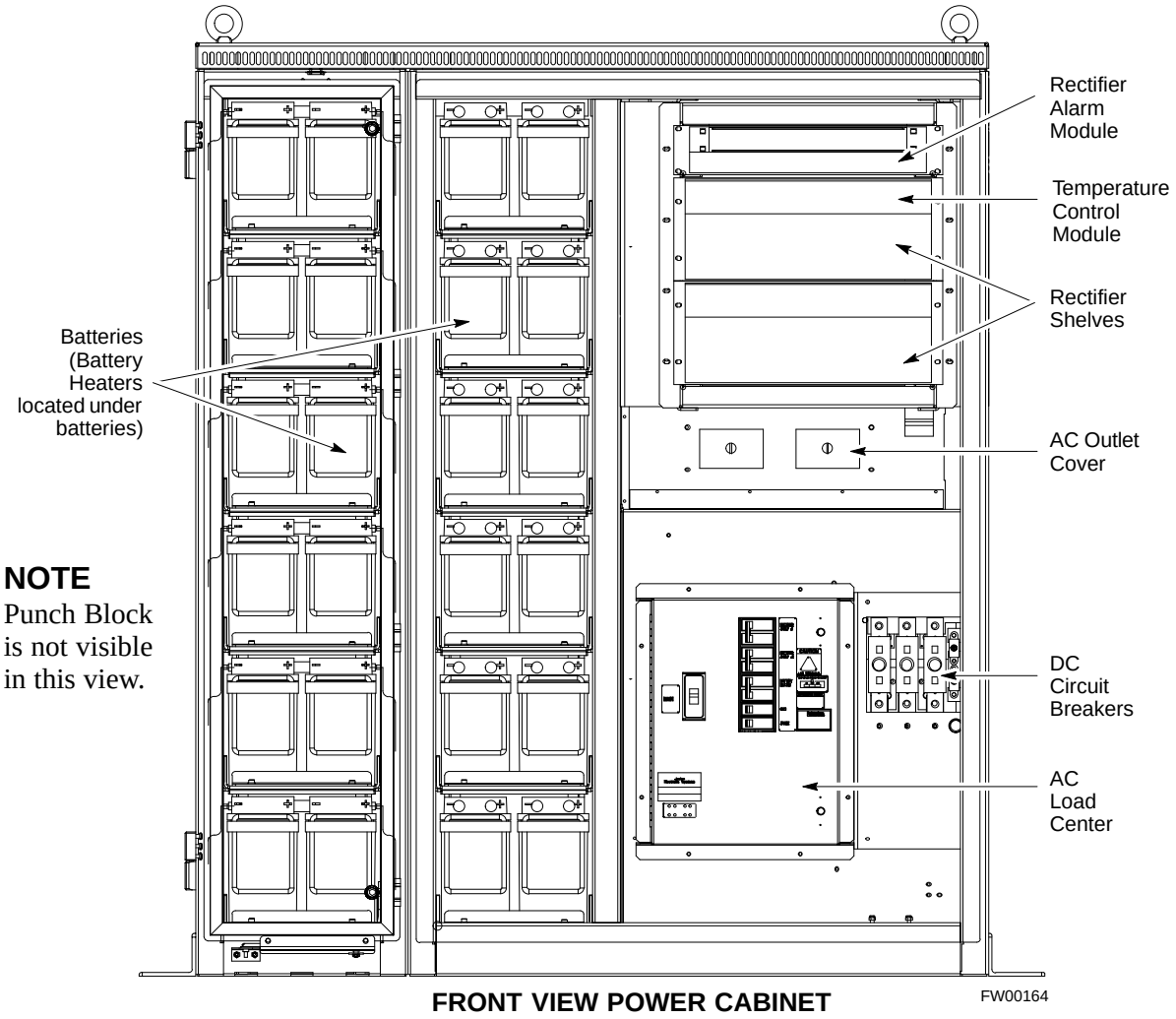

Batteries

The batteries provide a +24V DC backup to the RF Cabinet should AC Power be lost. The Power Cabinet can accommodate a total of 24 12V batteries, configured in 12 strings of 2 batteries each. The time duration of backup provided depends on system configuration.

Battery Heater

The battery heaters provide heating to the batteries in the Power Cabinet. A separate heater is required for each string of batteries. The heater is a pad the batteries sit on located top of each battery shelf. The number of heaters is dependent on system configuration.

. . . continued on next page

DRAFT

Battery Compartment Fan

The battery compartment fan provides air circulation for the two battery compartments. It is located on the inside of the battery compartment door.

Heat Exchanger

The Heat Exchanger provides cooling to the rectifier compartment of the Power Cabinet. The Heat Exchanger is located in the primary front door of the Power Cabinet.

Rectifiers

The +27V rectifiers convert the AC power supplied to the Power Cabinet to +27V DC to power the RF Cabinet and maintain the charge of the batteries.

AC Load Center (ACLC)

The ACLC is the point of entry for AC Power to the Power Cabinet. It incorporates AC power distribution and surge protection.

Punch Block

The Punch Block is the interface for the alarm signalling between the Power Cabinet and the RF Cabinet.

Enclosure Dimensions

Table 1-5 show the dimensions for the SC 4812ET RF and Power Cabinet enclosures.

Table 1-5: Cabinet Dimensions

Height	Width	Item	Depth	Weight (Max)
1677 mm (66”)	1423 mm (56”)	SC4812ET RF Cabinet	915 mm (36”)	680 kg (1500 lbs)
1677 mm (66”)	1423 mm (56”)	Power Cabinet	965 mm (38”)	1590 kg (3500 lbs)

NOTE

The primary front door of the RF Cabinet and both front doors of the Power Cabinet are removable. The depth of the cabinets with the door(s) removed is 711 mm (28”).

DRAFT

Enclosure Clearances

Figure 1-9 and Figure 1-10 show the clearances for the SC 4812ET RF and Power Cabinet enclosures.

Figure 1-9: Minimum Cabinet Clearances for Door Openings and Mounting Brackets

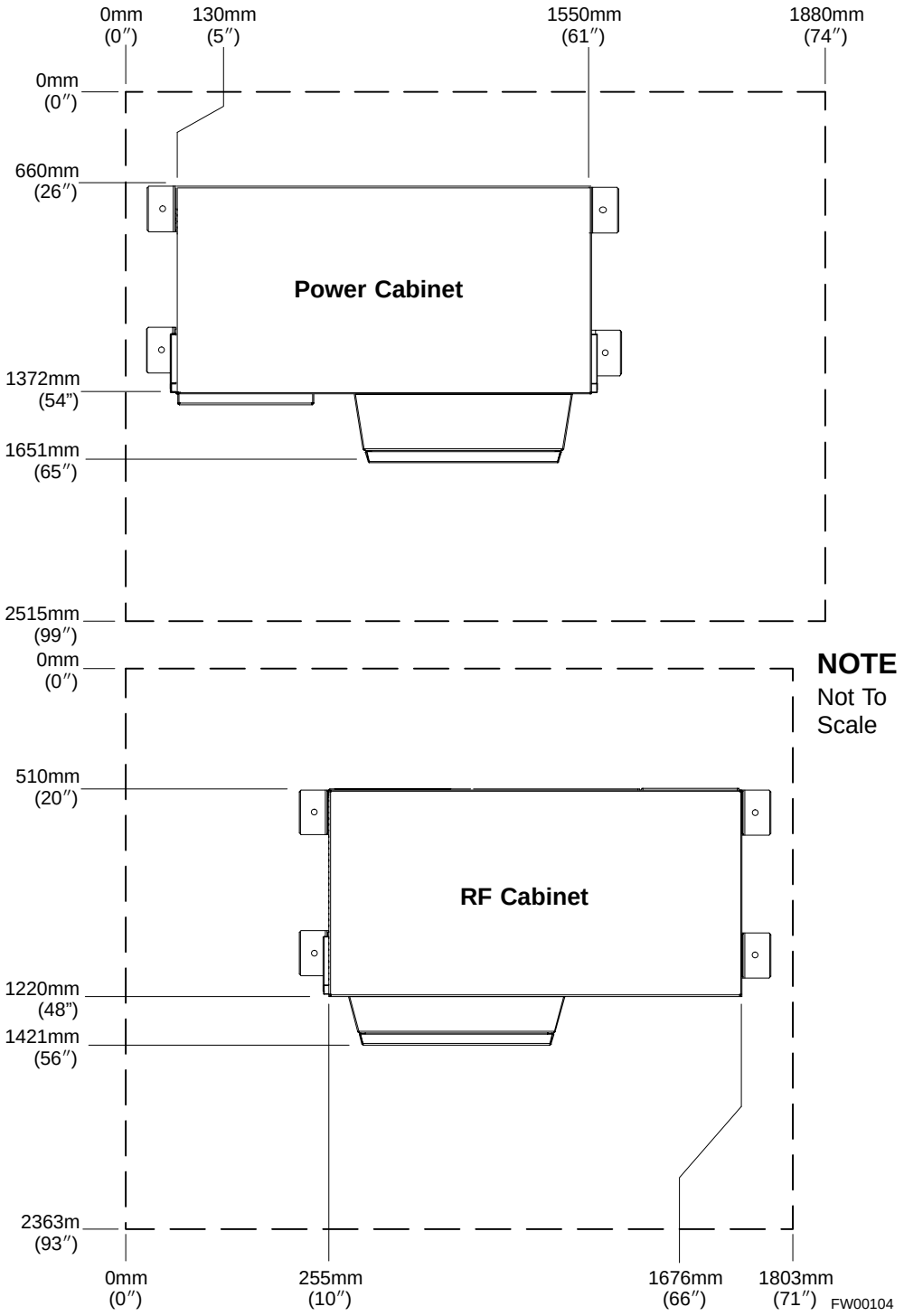

. . . continued on next page

DRAFT

Figure 1-10: Minimum Site Clearances for SC 4812ET Cabinets

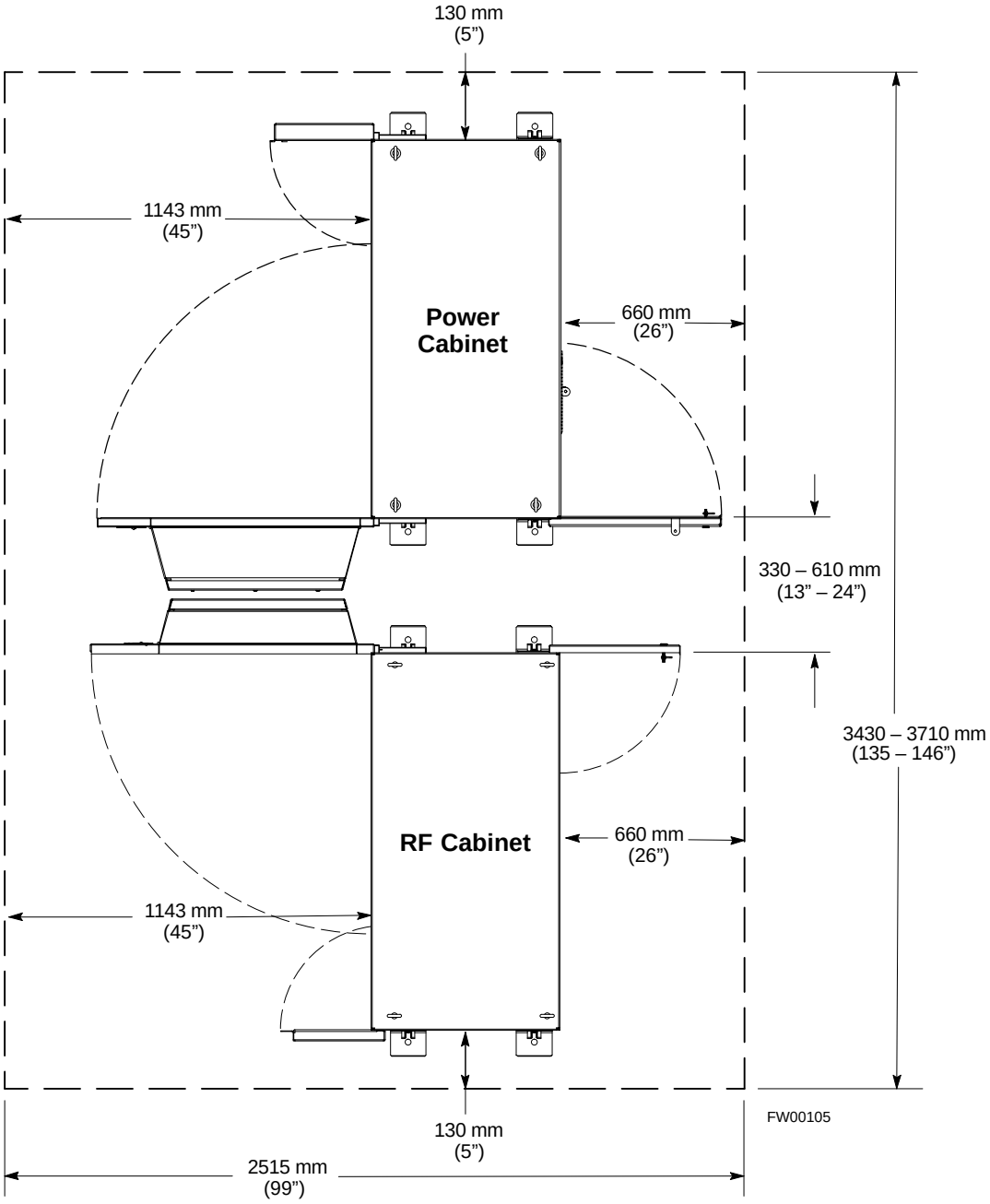

NOTE:
(1) 24” IS RECOMMENDED BETWEEN CABINETS TO ALLOW SIMULTANEOUS OPENING OF CABINET DOORS

(2) BASED ON FIGURE 1–10 MOTOROLA RECOMMENDS A MINIMUM PAD (OR PEDESTAL) SIZE OF 2515 MM (99”) BY 3710 MM (146”)

DRAFT

Notes

DRAFT

Chapter 2: Site Preparation

This section includes...

Overview 34
Indoor Location 34
Rooftop Location 36
Cabinet Weight Table 36
SC 4812ET RF Configuration 37
Minimum Battery Count for Power Cabinet 42
Outdoor Location 42
Materials Needed 43
Existing Concrete Pad Mounting 46
Drilling Introduction 47
Drilling Procedure 47
Rooftop 49
Rooftop (Elevated) 50
New Concrete Pad 50
Connection Materials 51
Concrete Pad and Ground System Installation 51
RGPS Mounting Considerations 57

Tables

Table 2-1: DC Cabling Size – Maximum Cable Length 36
Table 2-2: Approximate Weight of SC 4812ET BTS 37
Table 2-3: SC 4812ET FRU Configurations – Duplexed 38
Table 2-4: SC 4812ET FRU Configurations – Non–Duplexed . 38
Table 2-5: Min Battery Strings Required Sector–Carrier Configs 42
Table 2-6: Heliax Cable Loss and Minimum Bend Radii 44
Table 2-7: Number of wires in Conduit 44
Table 2-8: Drilling Procedure 47
Table 2-9: Concrete Pad & Ground System Install Procedure . . 52

Figures

Figure 2-1: Drill Stabilization 48
Figure 2-2: Mounting Hole Drilling and Cleaning 49

. . . continued on next page

DRAFT

Figure 2-3: Grounding Ring Detail 53
Figure 2-4: Conduit Stub Height Detail 53
Figure 2-5: Cabinet Dimensions 54
Figure 2-6: Pad Forms and Conduit Layout 55
Figure 2-7: Mounting Hole Dimensions 55
Figure 2-8: SC 4812ET RF Cabinet Conduit I/O 56
Figure 2-9: SC 4812ET Power Cabinet Conduit I/O 57

Overview

This chapter covers the SC 4812ET BTS site preparation recommended guidelines.

Installation sites can be classified into one of the three following categories: Indoor, Rooftop or Outdoor.

All applications will have common requirements and considerations. Differences between the location site requirements will be covered throughout the installation section. The following information is meant to serve as a guideline and can be impacted by site specific considerations.

WARNING

Every effort should be made to provide a safe working area for all installation and service personnel.

CAUTION

The mounting surface **must be flat**. Door closure problems may occur if the cabinets are not installed on a flat surface.

IMPORTANT

Care should be taken to ensure that the AC power pedestal does not interfere with the future addition of expansion or optional equipment service area.

Indoor Location

The following items should be considered when choosing an indoor location for the SC 4812ET BTS:

- A permanent location is more desirable than a temporary one.
- The cabinets should be placed in a location with appropriate clearance from any obstructions. For minimum clearances see Chapter 1.

. . . continued on next page

DRAFT

- Adequate ventilation must be available to dissipate heat loads of 7,500 Watts (25,600 Btu / hr) for the RF Cabinet and 3,000 Watts (10,300 Btu / hr) for the Power Cabinet (a total of 10,500 Watts; 35,900 Btu / hr), and maintain a maximum temperature of no greater than 50 Deg C (122 Deg F).
- The AC meter and main disconnect should not be mounted to either cabinet.
- Locations should be selected that will minimize accidental or intentional vandalism. Do not select a location that is, or may be, subject to submersion (i.e. diversion channels, sub–basements, etc). While the RF and Power Cabinet are well insulated from the environment, they will not tolerate submersion.
- There should be adequate clearance through doors and passageways to allow movement of the cabinet from the delivery area to the installation site.
- Verify, prior to final site selection, the availability and accessibility to good grounding (ground system resistance must be less than 10 Ohms, with 5 Ohms or less being the goal; see ”Recommended Documentation” for Grounding Guidelines), RF cabling, Telco wiring, and 208–240 VAC power.
- There should be adequate space available for the future addition of expansion or optional equipment.
- The location of an AC power pedestal to mount the AC meter, main breaker, generator plug, etc. (if necessary), is at the installers option.
- Every effort should be made to minimize the separation distance between the RF and Power Cabinet (see Table 2-1) for maximum cable length between cabinets

Table 2-1: DC Cabling Size – Maximum Cable Length

Cable Size	Resistance per 1,000 ft @ 50Deg C mΩ (THHN Cable)	Maximum Cable Length (Max Total Voltage Drop $\leq$ 0.4V, assumes 90A per cable)
2/0 AWG	96.8 (Superflex)	6.7 m (22 ft)
4/0 AWG	54 (Duraflex)	12.5 m (41 ft)

NOTE

- 3.65 m (12 ft.) is the length of the # 2/0 AWG DC Power Cable supplied with the Power Cabinet.
- If a custom cable is used, 610 mm (2 ft.) should be reserved at both ends to allow for the distance from the edge of the cabinet to the power terminals.

DRAFT

2

Rooftop Location

In addition to the Indoor location considerations, the following additional items should be considered when choosing a Rooftop location:

WARNING

Roof load carrying limits must be reviewed and an appropriate support structure must be installed to support the cabinets as required.

CAUTION

The cabinets must be elevated sufficiently above the roof surface to prevent water from puddling around its base. Although the cabinets are well insulated from the environment they will not tolerate submersion.

Loading Considerations (also see Table 2-2):

– A single SC 4812ET RF Cabinet can weigh up to 680 kg. (1500 lbs) and a single Power Cabinet enclosure can weigh up to 1590 kg. (3500 lbs) with the batteries installed (batteries are shipped separately). Expansion enclosures and optional equipment will add weight (refer to the introduction section of this manual for obtaining detailed information on the optional equipment).

NOTE

The Power Cabinet as shipped without batteries installed can weigh up to 544 kg (1200 lbs.).

– When the cabinet is to be roof mounted, be sure to consider the rain and/or snow loading of the region when determining whether the roof can support the load.

Zoning requirements – that relate to building mounted equipment should be checked for any restrictions that may affect cabinet or antenna placement.

Adequate clearance through doors, passageways and stairwells to allow movement of the cabinet from the delivery area to the installation site.

Minimum separation distance – Every effort should be made to minimize the separation distance between the RF and Power Cabinet (see Table 2-1).

Cabinet Weight Table

Table 2-2 lists the approximate weight of both the RF and Power cabinets in various site configurations.

. . . continued on next page

DRAFT

Table 2-2: Approximate Weight of SC 4812ET BTS				
# of Sectors – Carriers[1]	**RF Cabinet[2]**		**Power Cabinet[3]**	
	Total Weight	Weight/Area	**Total Weight**	Weight/Area
3	570 kg (1260 lbs)	563 kg/m^2 (0.8 psi)	1015 kg (2240 lbs)	1002 kg/m^2 (1.84 psi)
6	610 kg (1340 lbs)	602 kg/m^2 (0.85 psi)	1206 kg (2660 lbs)	1192 kg/m^2 (1.7 psi)
9	644 kg (1420 lbs)	636 kg/m^2 (0.91 psi)	1400 kg (3080 lbs)	1383 kg/m^2 (2.0 psi)
12	680 kg (1500 lbs)	671 kg/m^2 (0.95 psi)	1590 kg (3500 lbs)	1571 kg/m^2 (2.2 psi)

NOTE

[1] To obtain this number, multiply the number of sectors and the number of carriers present (i.e., 3 sector, 3 carrier is 9 sector–carriers)

[2] Assumes 12 DRDCs present in cabinet

[3] Assumes 4 hours of battery backup and maximum battery weight of 41 kg (90 lbs) each.

SC 4812ET RF FRU Configuration

SC 4812ET FRU Configurations for Duplexed sites are described in Table 2-3 (see page 38).

SC 4812ET FRU Configurations for Non–Duplexed sites are described in Table 2-4 (see page 39).

DRAFT

Table 2-3: SC 4812ET FRU Configurations – Duplexed

Con–fig	Ttl # Sec Car	BTS 1 – Starter							BTS 2 – Expansion							Expansion Field Recabling	Expansion Impact to Service
		VH LPAs	Trnk Mod	4812 DBPF	4812 2:1 Cmbr	4812 4:1 Cmbr	DRDCs	Dplxd Ants	VH LPAs	Trnk Mod	4812 DBPF	4812 2:1 Cmbr	4812 4:1 Cmbr	DRDCs	Dplxd Ants		
3 Sector																	
1 car	3	4	1	3	3 opt	3 opt	6	6									
2 car	6	8	2	3	3 opt	3 opt	6	6								Add Tx cable trunking module to DBPF/conbiner.	None
3 car	9	12	3	3	3	3 opt	6	6								Add Tx cable trunking module to DBPF/ combiner. Recable Starter Tx to add combiners	Take down ALL Tx
4 car	12	16	4	NA	6	3 opt	6	6								Add Tx cable trunking module to combiner. Recable Starter Tx to add combiners	Take down Carrier 3 Tx
5 car	15	16	4	NA	NA	3	6 (3 opt)	3	4	1	3	3 opt	3 opt	3	3	Recable Starter Tx to add combiners, recable Starter Rx, cable Rx exp. between frames, & move 3 antennas to exp.	Take down diversity Rx and ALL Tx.
6 car	18	16	4	NA	NA	3	6 (3 opt)	3	8	2	NA	3 opt	3 opt	3	3	Add Tx cable trunking module to DBPF/combiner. Recable Exp Tx to add combiners	Take down Carrier 5 Tx
7 car	21	16	4	NA	NA	3	6 (3 opt)	3	12	3	NA	3	3	3	3	Add Tx cable trunking module to combiner	Take down Carriers 5 and 6 Tx
8 car	24	16	4	NA	NA	3	6 (3 opt)	3	16	4	NA	3	3	3	3	Add Tx cable trunking module to combiner	None
6 Sector																	
1 car	6	8	2	6	6–opt	NA	12	12									
2 car	12	16	4	6	6–opt	NA	12	12								Add Tx cable trunking module to DBPF/combiner	None
3 car	18	16	4	NA	6	NA	12(6–opt)	6	8	2	6	6–opt	NA	6	6	Recable Starter Tx to add combiners, recable Starter Rx, cable Rx exp between frames, and move 6 antennas to exp.	Take down diversity Rx and ALL Tx

. . . continued on next page

DRAFT

Table 2-3: SC 4812ET FRU Configurations – Duplexed

Con–fig	Ttl # Sec Car	BTS 1 – Starter							BTS 2 – Expansion							Expansion Field Recabling	Expansion Impact to Service
		VH LPAs	Trnk Mod	4812 DBPF	4812 2:1 Cmbr	4812 4:1 Cmbr	DRDCs	Dplxd Ants	VH LPAs	Trnk Mod	4812 DBPF	4812 2:1 Cmbr	4812 4:1 Cmbr	DRDCs	Dplxd Ants		
8 car	24	16	4	NA	NA	3	6 (3 opt)	3	16	4	NA	3	3	3	3	Add Tx cable trunking module to combiner	None
4 car	24	16	4	NA	6	NA	12(6–opt)	6	16	4	NA	6	NA	6	6	Add Tx cable trunking module to combiner. Recable Exp Tx to add combiners	Take dowm Carrier 3 Tx

NOTES: Tx combiners typicalln not used until system exceeds 2 carriers.
Duplexed diversity Rx antennas are routed to DRDCs in expansion frame and then diversity Rx expansion is routed back to starter frame.
Tx paths are NOT routed between expansion and starter frames (i.e. each frame must have its own Tx antennas which reduces loss).
When expansion frame is added, the unused DRDCs in the starter frame could be removed and replaced with cover plates, but it is not recommended due to the time involved.

Table 2-4: SC 4812ET FRU Configurations – Non–Duplexed

Con–fig	Ttl # Sec Car	BTS 1 – Starter								BTS 2 – Expansion								Expansion Field Recabling	Expansion Impact to Service
		VH LPAs	Trnk Mod	4812 DBPF	4812 2:1 Cmbr	4812 4:1 Cmbr	TRDCs	RX Ant	TX Ant	VH LPAs	Trnk Mod	4812 DBPF	4812 2:1 Cmbr	4812 4:1 Cmbr	TRDCs	RX Ant	TX Ant		
3 Sector																			
1 car	3	4	1	3	3 opt	3 opt	6	6	3										
2 car	6	8	2	3	3 opt	3 opt	6	6	6 (3 opt)									Add Tx cable trunking module to DBPF/conbiner.	None
3 car	9	12	3	*NA*	*6*	3 opt	6	6	6 (3 opt)									Add Tx cable trunking module to DBPF/ combiner. Recable Starter Tx to add combiners	Take down ALL Tx
4 car	12	16	4	NA	6	3 opt	6	6	6 (3 opt)									Add Tx cable trunking module to combiner. Recable Starter Tx to add combiners	Take down Carrier 3 Tx

. . . continued on next page

Table 2-4: SC 4812ET FRU Configurations – Non–Duplexed

Con–fig	Ttl # Sec Car	BTS 1 – Starter								BTS 2 – Expansion								Expansion Field Recabling	Expansion Impact to Service
		VH LPAs	Trnk Mod	4812 DBPF	4812 2:1 Cmbr	4812 4:1 Cmbr	TRDCs	RX Ant	TX Ant	VH LPAs	Trnk Mod	4812 DBPF	4812 2:1 Cmbr	4812 4:1 Cmbr	TRDCs	RX Ant	TX Ant		
5 car	15	16	4	NA	NA	3	6 (3 opt)	3	3 (6 opt)	4	1	3	3 opt	3 opt	3	3	3	Recable Starter Tx to add combiners, recable Starter Rx, cable Rx exp. between frames, & move 3 antennas to exp.	Take down diversity Rx and ALL Tx.
6 car	18	16	4	NA	NA	3	6 (3 opt)	3	3 (6 opt)	8	2	NA	3 opt	3 opt	3	3	3	Add Tx cable trunking module to DBPF/combiner. Recable Exp Tx to add combiners	Take down Carrier 5 Tx
7 car	21	16	4	NA	NA	3	6 (3 opt)	3	3 (6 opt)	12	3	NA	3	3	3	3	3	Add Tx cable trunking module to combiner	Take down Carriers 5 and 6 Tx
8 car	24	16	4	NA	NA	3	6 (3 opt)	3	3 (6 opt)	16	4	NA	3	3	3	3	3	Add Tx cable trunking module to combiner	None
6 Sector																			
1 car	6	8	2	6	6 opt	NA	12	12	6										
2 car	12	16	4	*6 opt*	*6*	NA	12	12	6 *(12 opt)*									Add Tx cable trunking module to DBPF/ combiner. *Recable Starter Tx to add combiners.*	None
3 car	18	16	4	*NA*	6	NA	12(6–opt)	6	*6*	8	2	*6 opt*	*6*	NA	6	6	6	Recable Starter Tx to add combiners, recable Starter Rx, cable Rx exp between frames, and move 6 antennas to exp.	Take down diversity Rx and ALL Tx
4 car	24	16	4	*NA*	6	NA	12(6–opt)	6	*6*	16	4	NA	6	NA	6	6	6	Add Tx cable trunking module to combiner. Recable Exp Tx to add combiners	Take dowm Carrier 3 Tx

. . . continued on next page

DRAFT

Table 2-4: SC 4812ET FRU Configurations – Non–Duplexed

Con–fig	Ttl # Sec Car	BTS 1 – Starter								BTS 2 – Expansion								Expansion Field Recabling	Expansion Impact to Service
		VH LPAs	Trnk Mod	4812 DBPF	4812 2:1 Cmbr	4812 4:1 Cmbr	TRDCs	RX Ant	TX Ant	VH LPAs	Trnk Mod	4812 DBPF	4812 2:1 Cmbr	4812 4:1 Cmbr	TRDCs	RX Ant	TX Ant		
8 car	24	16	4	NA	NA	3	6 (3 opt)	3	3 (6 opt)	16	4	NA	3	3	3	3	3	Add Tx cable trunking module to combiner	None

NOTES: Tx combiners typically not used until system exceeds 2 carriers.
Duplexed diversity Rx antennas are routed to TRDCs in expansion frame and then diversity Rx expansion is routed back to starter frame.
Tx paths are NOT routed between expansion and starter frames (i.e. each frame must have its own Tx antennas which reduces loss).
When expansion frame is added, the unused TRDCs in the starter frame could be removed and replaced with cover plates, but it is not recommended due to the time involved.

2

Minimum Battery Count for Power Cabinet

Table 2-5 lists the number of Battery strings required for the different sector–carrier configurations and the backup power time provide by the various combinations.

Table 2-5: Minimum Battery Strings Required for Sector–Carrier Configurations

# of Battery Strings	3 Rectifiers (3 Sector–Carriers)	4 Rectifiers (6 Sector–Carriers)	5 Rectifiers (9 Sector–Carriers)	6 Rectifiers (12 Sector–Carriers)
0	0	0	0	0
1				
2				
3				
4				
5				
6	4.0 hrs			
7	4.8 hrs	3.5 hrs		
8	5.4 hrs	4.0 hrs		
9	6.0 hrs	4.5 hrs	3.6 hrs	
10	6.7 hrs	5.0 hrs	4.0 hrs	3.3 hrs
11	7.4 hrs	5.5 hrs	4.4 hrs	3.6 hrs
12	8.0 hrs	6.0 hrs	4.8 hrs	4.0 hrs

! CAUTION

The minimum number of battery strings presented in this table must be met or reduced backup time and inadvertant tripping of the battery system breakers could result.

NOTE

The backup durations presented within this table is an estimated time based on 25 Deg C (77Deg F) battery temperature, actual backup duration may vary with system configuration and loading.

Outdoor Location

CAUTION

Do not select a location that is, or may be subject to submersion (i.e., floodplains, diversion channels, etc.). While the cabinets are well insulated from the environment, they will not tolerate submersion.

DRAFT

In addition to the Indoor location considerations, the following additional items should be considered when choosing an outdoor location:

- The cabinet should be placed in a location with appropriate clearance from any obstructions. For minimum clearances see Chapter 1.
- It should be the practice of any installing company to acquire, in advance of construction, the rights of way from landowners, and permits or approvals from public authorities. It is recommended that the BTSs be placed in servitudes, on dedicated (recorded) easements, or on property owned by the company. Unrecorded easements should be avoided.
- The cabinet should be easily accessible with adequate parking to ensure craftsmen and vehicle safety. Also, place the cabinet where it will not create a visual or physical obstruction to either vehicular or pedestrian traffic.
- Locations should be selected that will minimize accidental or intentional vandalism. The use of protective posts and/or fences should be considered when located near parking areas where vehicles may hit the cabinet.
- Every effort should be made to minimize the separation distance between the RF and Power Cabinet (see Table 2-1).

Materials Needed

The following list of materials may vary depending on site specific requirements. If in doubt contact Motorola Cellular Support Center. The phone number is found in the *Foreword* of this manual.

Installation hardware is provided with the cabinets. (Refer to Chapter 1 for a description of this hardware).

Tools – Refer to Chapter 1 for a list of tools that will be helpful when installing the SC4812ET BTS.

RF Transmission Lines

- Cables are 12.7 mm (1/2”), 22.2 mm (7/8”), 31.8 mm (1–1/4”) or 41.3 mm (1–5/8”) Foam® Heliax, depending on dB loss budget. See Table 2-6 for dB Loss per foot and minimum bending radius.
- Either 102 mm (4”) or 152 mm (6”) conduit, depending on size of Heliax (see Table 2-7), is recommended.

DRAFT

NOTE

It may not be necessary or desirable to run the transmission lines in any conduit at all. In this case the transmission lines should be protected from falling objects (i.e., ice, etc.) or from being stepped on.

Table 2-6: Heliax Cable Loss and Minimum Bend Radii

Heliax Cable	Motorola Part No.	dB loss per meter		dB loss per foot		Min. bend radius	
		@ 1 GHz	@ 2 GHz	@ 1 GHz	@ 2 GHz	Metric	U.S.
RG 142	CGDSRG142BU	.49	.66	.15	.20	10 mm	.4”
3/8” LDF	N/A	.115	.167	.035	.051	95 mm	3–3/4”
1/2”LDF	SGDN4232A	.0768	.1132	.0234	.0345	125 mm	5”
1/2” FSJ4	N/A	.119	.177	.0363	.0541	13.75 mm	1.25”
7/8”LDF	SGDN4234A	.0430	.0646	.0131	.0197	250 mm	10”
1–1/4”LDF	SGDN4235A	.0317	.0476	.00967	.0145	380 mm	15”
1–5/8”LDF	SGDN4233A	.0269	.0410	.00819	.0125	510 mm	20”

NOTE

As an additional rule of thumb, allow 0.1 dB additional loss for each connection point.

Table 2-7: Number of wires in Conduit

Conduit Trade Size	Foam Heliax Trade Size (Cable Type LDF)				
	9.5 mm (3/8”)	12.7 mm (1/2”)	21.4 mm (7/8”)	31.8 mm (1–1/4”)	41.3 mm (1–5/8”)
2”	5	2	1	–	–
2–1/2”	7	3	1	–	–
3”	11	5	3	–	–
4”	19	9	5	1	1
6”	20	20	12	3	2

*** IMPORTANT**

The values listed above were calculated based on the percent of conduit cross–section filled and recommended limits set forth by Andrew Corporation. These limits are based on common conditions or proper cabling and alignment of conductors where the length of pull and the number of bends are within reasonable limits. It should be recognized that for certain conditions a larger size conduit or a lessor fill should be considered.

Power Cabinet AC Power Connection

208–240 VAC – Flexible Liquid Tight Conduit is recommended.

DRAFT

IMPORTANT

The Power Cabinet is rated at 130 Amps (100 Amps continuous / 130 Amps non–continuous, in the range of 208–240V AC, see Table 5-32 for details). Maximum cable size that can be accommodated is 300 kc mil. Cabling sizing should be determined by Local Electrical Codes, using 90Deg C rated conductors, and derated for 50 Deg C operation. Motorola recommends not less than #2/0 AWG (#1 BSWG; 50 mm^2) copper for buried/raceway cables to the power pedestal, with an associated power pedestal breaker size of 150 Amps for one Power Cabinet.

The AC power pedestal or meter should be provided with a breaker to protect the cable from the pedestal to the Power Cabinet. The Power Cabinet rating is 130Amp. A 150–amp breaker is recommended, or as appropriate for local electrical code.

NOTE

The knockout in the I/O plate of the Power Cabinet is the proper size for a 2” Trade size conduit fitting.

Ground Wire Connection (RF and Power Cabinet) – #3 B.S.W.G (#2 AWG; 35 mm^2) solid–tinned copper wire or equivalent is recommended

RF Cabinet Alarm Cable Connection

- Sixteen (16) twisted pair cable
- 25.4 mm (1”) conduit (maximum)

RF Cabinet Span and Modem Cable Connection

- Thirteen (13) twisted pair cable
- 25.4 mm (1”) conduit (maximum)

Main RF Cable – 50 Ohm Coaxial, male N–type connector on one end, customer specific on other end.

RGPS Cable (if applicable) – See Table 5-1 for cable specifications

RF GPS Cable (if applicable) – See Table 5-1 for cable specifications

LFR Cable (if applicable) – See Table 5-1 for cable specifications

. . . continued on next page

DRAFT

Power Cabinet Alarm Cable – A Twelve (12) wire, Six (6) twisted pair cable [Cable supplied with the Power Cabinet is 4.5 m (15 ft) in length].

NOTE

Custom cable lengths are available from Storm Products (214–637–1381); 9215 Premier Row, Dallas, TX. 75247. Part number “070197–6SA” for Non–Plenum rated cable.

DC Power Interconnect

- #1 BSWG (#2/0 AWG; 50 mm$^{2)}$ insulated weld wire or equivalent is recommended (supplied with the Power Cabinet)
- 51 mm (3”) conduit

NOTE

The DC Power Cabling and the Power Cabinet Alarm Cable can be run in the same 3” Conduit from the RF Cabinet to the Power Cabinet.

Existing Concrete Pad Mounting

CAUTION

The mounting surface **must be flat**. Door closure problems may occur if the BTS is not installed on a flat surface.

For an installation where the cabinet will mount flush to an existing concrete floor, all of the connections to the cabinet will be made through the rear I/O area of the cabinet. For this reason, the cabinet must be set in place and bolted down prior to running any conduits or wiring. Conduit/wire routing will be discussed in Chapter 5.

Lightning protection is provided with the cabinet. A good earth ground (ground system resistance must be less than 10 Ohms, with 5 Ohms or less being the goal), is required for the lightning protection equipment to perform properly. Refer to Motorola’s guidelines (Motorola Publication 68P81150E62) for details on the design of a grounding system. Conform to local electrical construction standards for conduit materials and sizing.

DRAFT

Drilling Introduction

The following includes steps that must be followed to safely drill the mounting holes. Check the mounting hardware to be used to make sure you use the correct drill bit sizes.

CAUTION

Motorola recommended anchor bolts (Motorola P/N CGDS97400036) must be used to assure safety in the event of an earthquake.

WARNING

Safety glasses, dust masks, and ear plugs must be worn by **all** installation personnel, including those in the immediate vicinity of personnel operating the drill equipment.

Drilling Procedure

Before beginning, read the following steps *in their entirety* to familiarize yourself with the procedure.

Table 2-8: Drilling Procedure

Step	Action
1	After the cabinet position has been established, the mounting hole location can be marked using the dimensions supplied in Figure 2-5, by using the 1:1 installation template supplied in Appendix G, or by placing the cabinet over the desired location and tracing the mounting hole locations.
	NOTE – Motorola recommended anchor bolts require **18 mm (11/16”)** drill size. **△ WARNING** – Always wear safety glasses, dust masks, ear plugs, and proper attire when using power equipment. Remove any loose jewelry and tuck shoe laces into work boots.

. . . continued on next page

DRAFT

Table 2-8: Drilling Procedure

Step	Action
2	Position the end of the drill bit in the center of the first mark on the floor. Stabilize the drill by holding the drill handle at the 90° position, refer to Figure 2-1. Rest the drill against your leg while drilling to counter the drill's tendency of rotating out of your hand while drilling through reinforcement bars and stone aggregate.
	Figure 2-1: Drill Stabilization 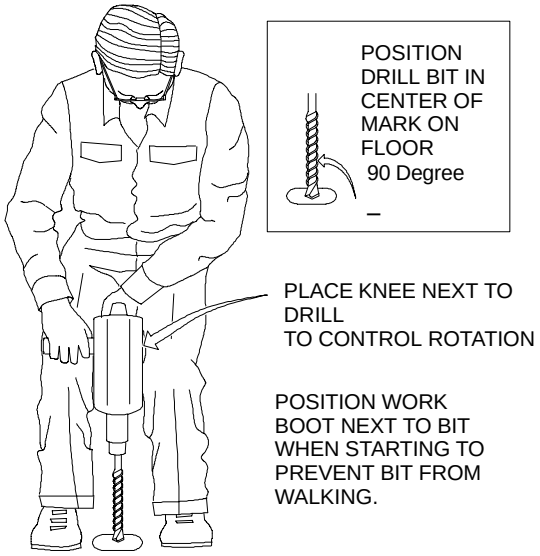
3	Begin to drill in short bursts, keep the drill bit from "walking" by using the side of your work boot to hold the drill in place until drill "has a bite" in the concrete. Once started, run drill at full speed.

. . . continued on next page

DRAFT

Table 2-8: Drilling Procedure	
Step	**Action**
4	Have a second installer turn on the shop vacuum and place the nozzle near the hole to collect dust and debris (see Figure 2-2). This will extend the life of the drill bit, and give you a better idea of how deep the hole is. Wrapping a piece of electrical tape around the drill bit to indicate the desired depth is suggested.
	Figure 2-2: Mounting Hole Drilling and Cleaning 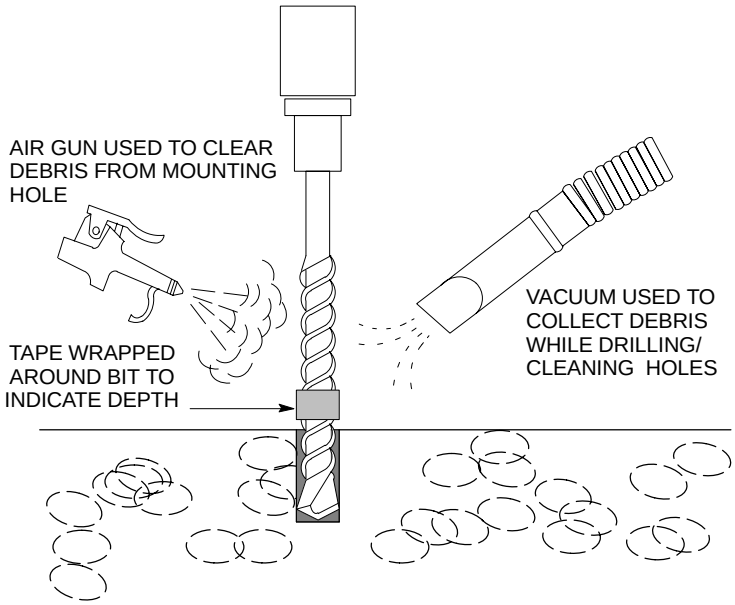
5	Repeat Step 3 and 4 for all remaining holes to be drilled for this cabinet.
6	Clean all holes by using the shop vacuum in conjunction with the air compressor gun attachment. Begin by using short bursts of air several inches away from the hole, gradually decreasing the distance from the hole while increasing the duration of the air bursts until the hole is completely free of loose material.

Rooftop

WARNING

Roof load carrying limits must be reviewed and an appropriate support structure must be installed to support the RF and Power Cabinet as required.

CAUTION

The cabinet must be elevated sufficiently above the roof surface to prevent water from puddling around its base. Although the cabinets are well insulated from the environment they will not tolerate submersion.

. . . continued on next page

DRAFT

Refer to Figure 2-5 and Figure 2-6 for proper position of mounting locations when designing the support structure.

For most rooftop installations all of the connections to the cabinet will be made through the rear of the cabinet I/O area. For this reason, the cabinet must be set in place and bolted down prior to running any conduits or wiring. Conduit/wire routing will be discussed in Chapter 5.

Lightning protection is included in the cabinet. A good earth ground (ground system resistance must be less than 10 Ohms, with 5 Ohms or less being the goal) is required for the lightning protection equipment to perform properly. Refer to Motorola's guidelines (Motorola Publication 68P81150E62) for details on the design of a grounding system. Conform to local electrical construction standards for conduit materials and sizing.

Rooftop (Elevated)

For a rooftop installation which is elevated sufficiently above the roof surface, most of the connections can be made through the bottom of the cabinet by terminating the conduit at the bottom of the rear I/O area. See Figure 2-6 for recommended conduit/cable entrance layout.

New Concrete Pad

CAUTION

The mounting surface **must be flat**. Door closure problems may occur if the cabinets are not installed on a flat surface.

To help reduce the chance of damage caused by lightning strikes, it is required that a ground ring be constructed when the pad is built. See section titled "Ground System Installation".

Variations in pad construction methods may be required to comply with local conditions, practices, or building codes.

Install the grounding system, and electrical conduits (see Figure 2-3, Figure 2-4, and Figure 2-6) prior to pad construction. Refer to the Motorola guidelines (Motorola Publication 68P81150E62) for details on the design of a grounding system. Conform to local electrical construction standards for conduit materials and sizing. Refer to Table 2-6 and Table 2-7 for minimum bend radius of antenna cables and maximum number of cables in a conduit.

If it is desired to make cabling through the bottom of the cabinets, it is recommended that the conduits be positioned using the dimensions given in Figure 2-5 prior to pouring the concrete pad. Installation in this manner allows for the connections to the RF and Power Cabinet to be made through the bottom of the I/O area, although it may be desirable to make the antenna connections through the rear wall. For the connections that are made through the bottom of the I/O area, conduits and wiring can be installed prior to arrival of the cabinet.

. . . continued on next page

DRAFT

CAUTION

Conduits that are pre–installed in a concrete pad below grade must be capped at the time of conduit installation to prevent rainwater from collecting in the conduit.

WARNING

If a precast concrete foundation pad is used, the pad should be in place before the cables are installed. This will avoid an unsafe condition caused by personnel reaching under a pad, as it is lowered, to feed cable through the pad openings.

Connection Materials

This section defines connection materials and specifications and may vary depending on site–specific requirements. If in doubt, contact Motorola Cellular Support Center (telephone number is found in the *Foreword* of this manual).

Concrete Pad and Ground System Installation

The following procedure describes the concrete pad ground system installation. The following steps are meant to serve as a guideline and can be impacted by the local codes of the installation site location.

Materials Needed:

CADWELD Joints

8–12 – ground wire to ground rod joints (for 2–6 cabinets)

4 – rebar joints

1 – ground wire to rebar joint

Ground Rods – 8–12 – 5/8” Diameter, 2438 mm (96”) long ground rods (for 2–6 cabinets)

Framing Materials – This list of materials is used to form the pad.

- No. 66–44 wire mesh, or 9.5 mm (3/8”) rebar, sized to fit the pad
- Concrete (Must conform to ASTMC94, specification for ready mix concrete)

NOTE

It is recommended that the concrete pad maintain a minimum thickness of 102 mm (4 inches) or the length of the anchor bolt to be used, whichever is greater.

DRAFT

Installation Procedure:

Install the concrete pad and ground system as described in Table 2-9.

Table 2-9: Concrete Pad and Ground System Installation Procedure

Step	Action
1	Ensure that the pad location is firm and level. If the ground around the location is not firm, compact the soil and construct a level base for the pad using a minimum of six inches of gravel or per local code requirements.
2	Dig trenches 610 mm (24”) deep (minimum), and wide enough to accommodate the ground ring and conduits.
3	Install conduits. Recommended locations are shown in Figure 2-6. Refer to Table 2-6, and Table 2-7 for minimum bend radius of Foam Heliax and maximum number of Heliax in a conduit.
4	Install 152 mm (6”) concrete pad frame with integral rebars and dry wells. Refer to Figure 2-6 for pad dimensions.
5	Install #3 BSWG (#2 AWG; 35 mm^2) solid tinned copper perimeter ground ring (see Figure 2-3).
6	Exothermic weld #3 BSWG (#2 AWG; 35 mm^2) solid tinned copper wire from concrete pad rebar to perimeter ground ring.
7	Install copper clad steel ground rods.
8	Exothermic weld perimeter ground ring to steel ground rods.
9	Install three #3 BSWG (#2 AWG; 35 mm^2) solid tinned copper wires, exothermic welded to perimeter ground ring, for BTS master ground, Power Cabinet master ground, and for antenna tower ground straps. **NOTE** For sites with multiple cabinets an additional #3 BSWG (#2 AWG; 35 mm^2) solid tinned copper wire must be installed for each additional cabinet.
10	Fill the trenches in the area of the pad with soil and tamp.
11	Pour concrete until level or slightly above the concrete forms. Puddle the concrete along the edges of the forms. Use a straight piece of lumber or equivalent as a guide to level the concrete.
12	For additional finishing, wait until the pad no longer looks as if water is standing on top and trowel smooth.
13	After the second day the concrete forms can be removed.
14	The concrete mounting pad must cure adequately before the cabinets may be installed.

. . . continued on next page

DRAFT

Grounding Ring:

The following information details installation of the site grounding ring. Refer to Figure 2-3 for detail dimensions.

Figure 2-3: Grounding Ring Detail

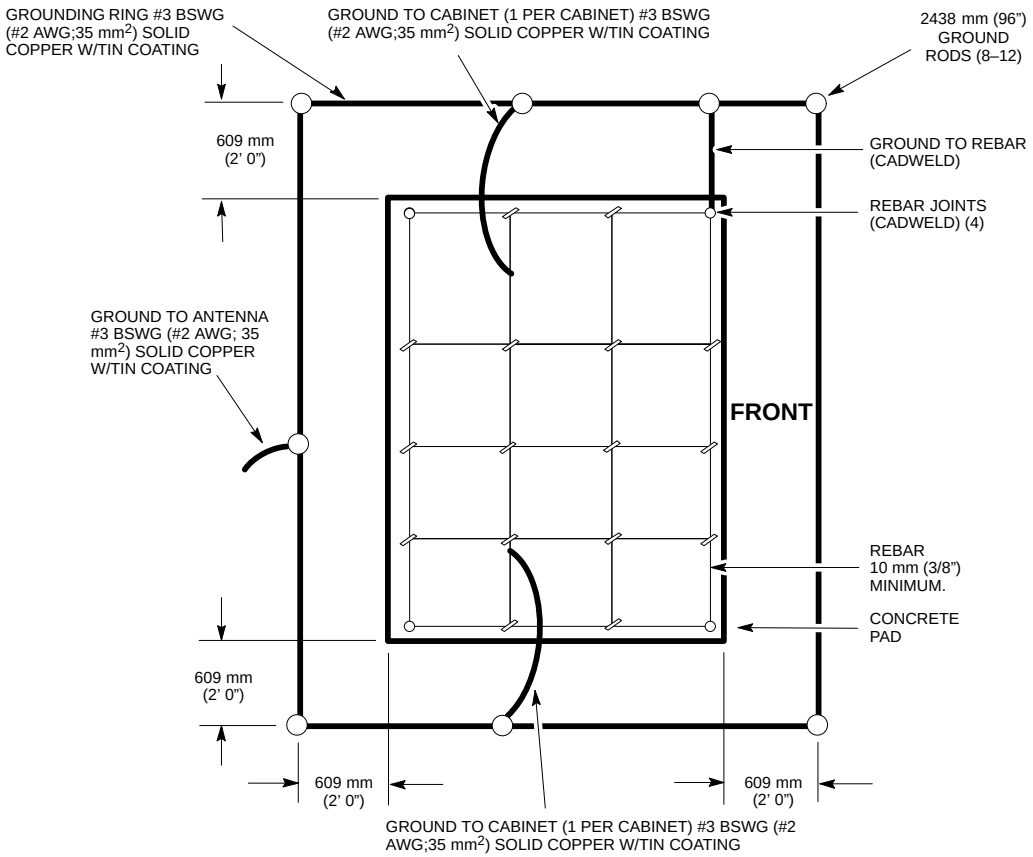

Figure 2-4: Conduit Stub Height Detail

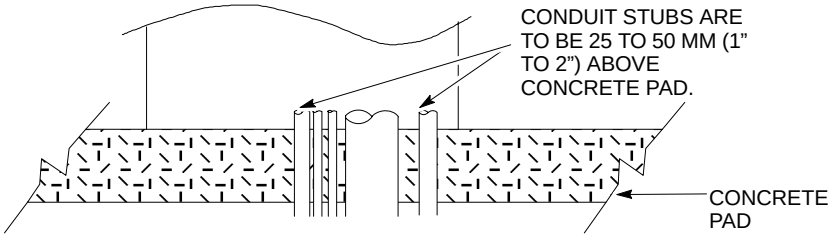

NOTE

- Conduits that are Pre–installed must be capped to prevent moisture from collecting prior to cabinet installation.
- Used when I/O goes through the bottom of the cabinet I/O area, i.e. when conduit is set in concrete pad or floor.

DRAFT

2

Figure 2-5: Cabinet Dimensions

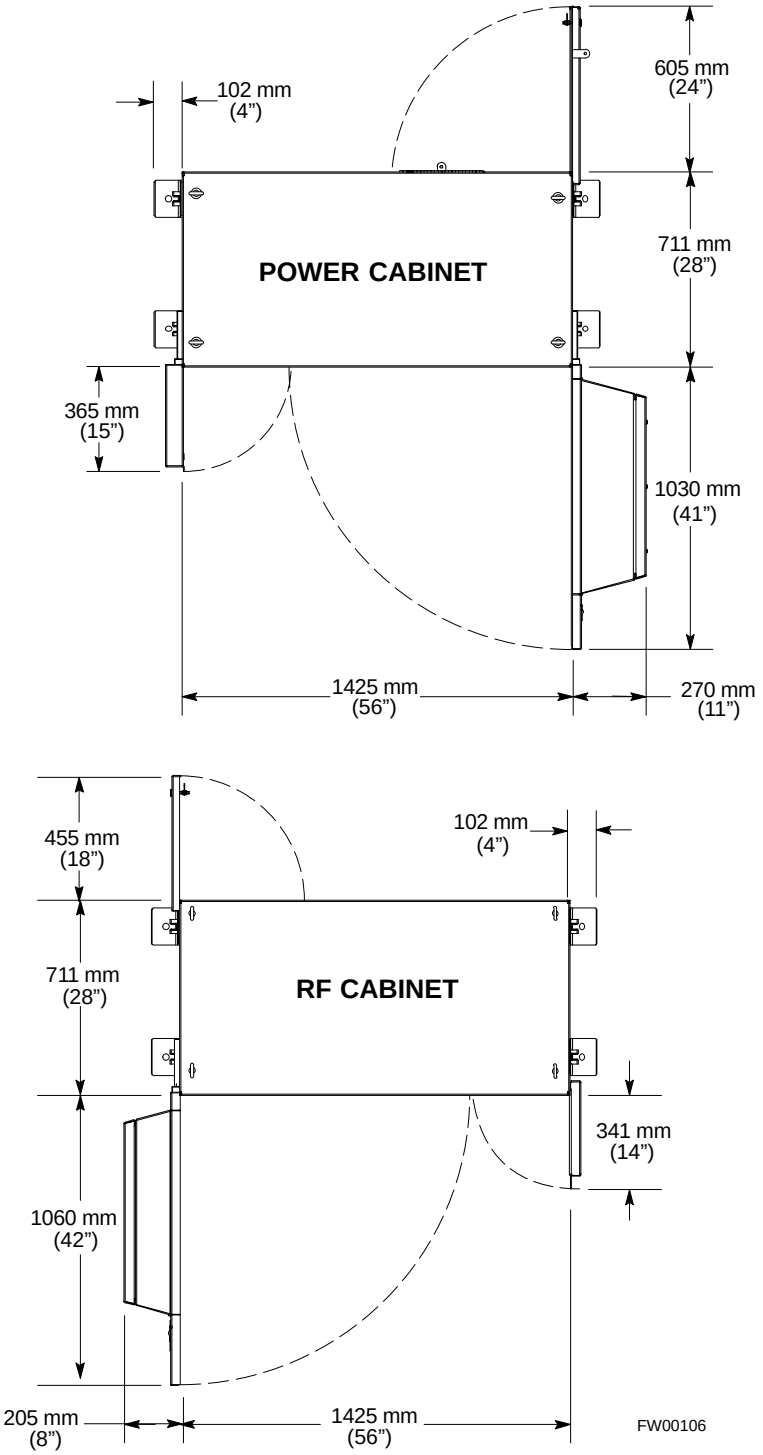

DRAFT

Figure 2-6: Pad Forms and Conduit Layout

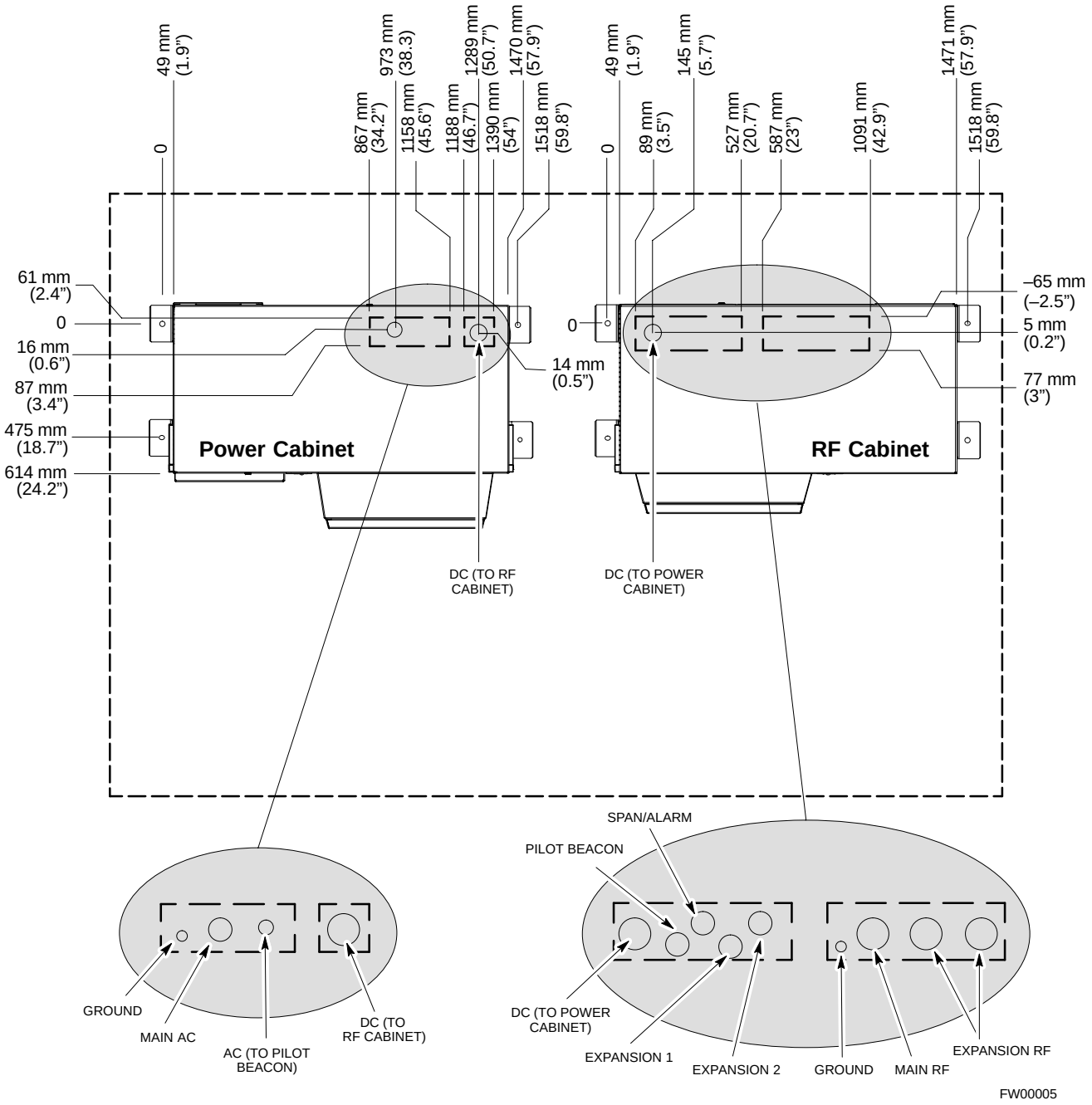

Figure 2-7: Mounting Hole Dimensions

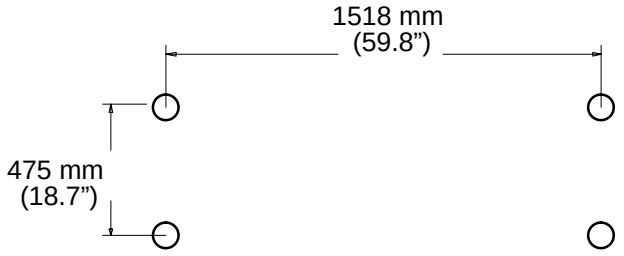

Note:
Hole Pattern is Identical for RF and Power Cabinets

DRAFT

Figure 2-8: SC 4812ET RF Cabinet Conduit I/O

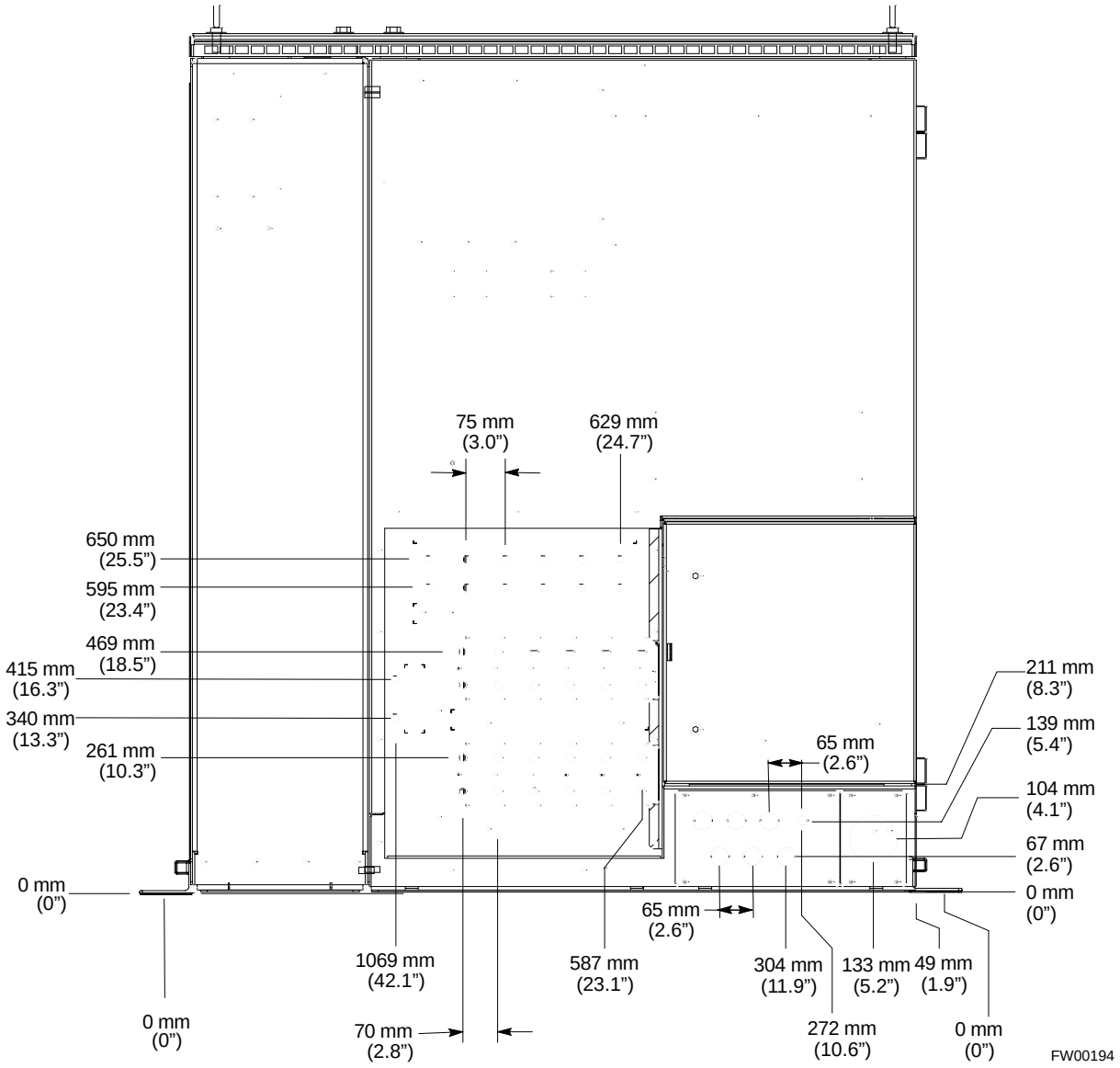

DRAFT

Figure 2-9: SC 4812ET Power Cabinet Conduit I/O

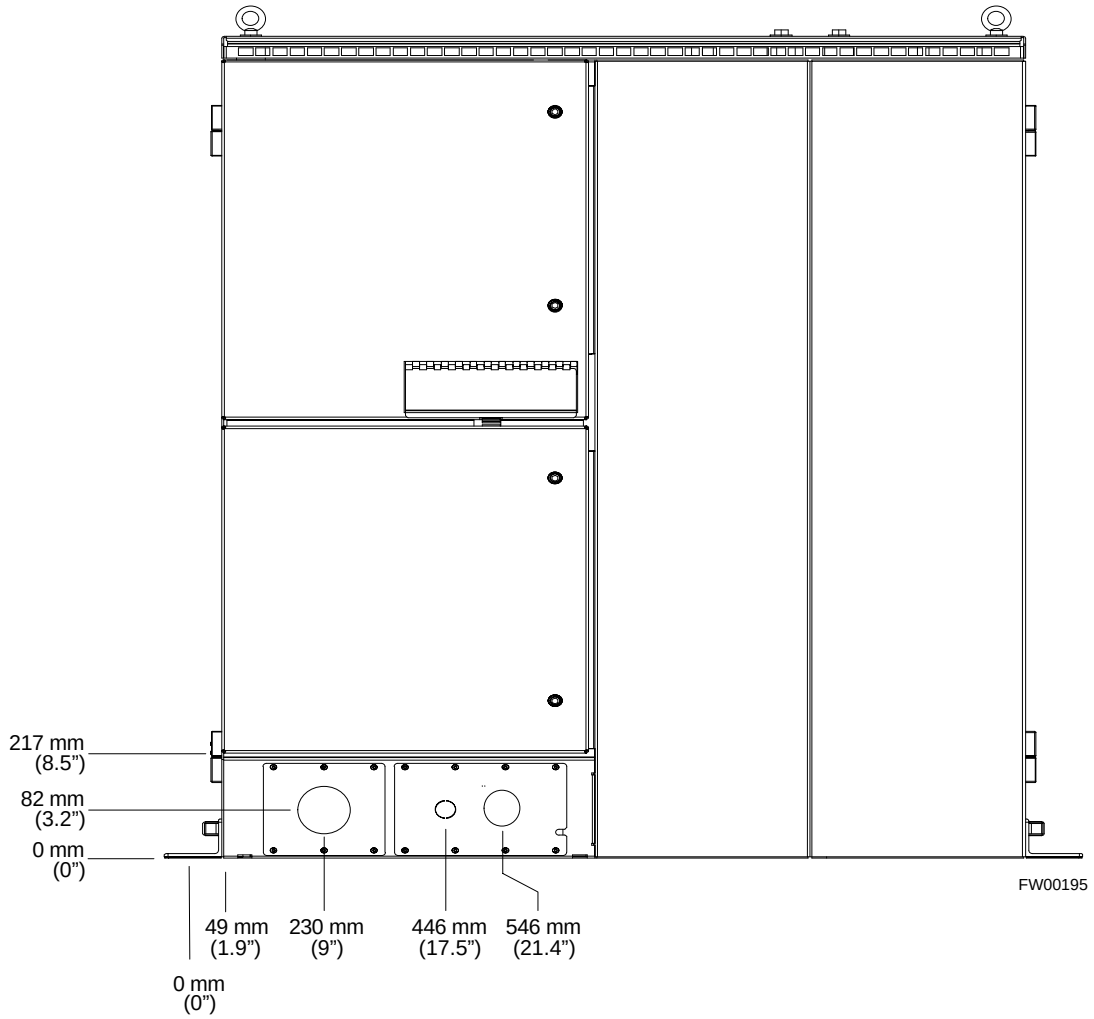

RGPS Mounting Considerations

The RGPS Head requires specific mounting considerations in order to properly observe the GPS satellites.

- The mounting pipe for the RGPS Head should be mounted vertically with less than five degrees of tilt.
- The RGPS Head needs to have a clear view of the sky, preferably to within ten degrees of the horizon in all directions. The less sky that can be observed the fewer the number of potential satellites that can be tracked and hence the poorer the RGPS performance.
- For general operation, the RGPS Head needs to be able to continuously track signals from at least four (4) GPS satellites. It is theoretically possible to operate the BTS with only one GPS satellite visible, however, operating in this mode it is not recommended and requires an accurate site survey.

DRAFT

- Place the RGPS Head where RF obstructions of the sky are minimized. The “sky” includes everything to within ten degrees (10°) of the horizon in all directions. RF obstructions includes buildings, towers, snow, foliage and debris.
- Separate the RGPS Head from radiating sources. Excessive RF energy can degrade the RGPS head’s ability to observe the GPS satellites. The RGPS head receives on the GPS L1 frequency of 1575.42 MHz and has filters incorporated within to minimize the effects of potential RF interference, however, strong radiators can overwhelm the filters, thus degrading the units reception capability.
- The RGPS Head is rated for ambient air temperatures from –40 Deg C to +50 Deg C, and has ratings for Humidty, Shock, Waterproof, UV Light Resistance, Vibrations, Salt, Fog, ESD, EMI, and Altitude.
- The RGPS system will support up to 2000 feet (610 m) of overall cable length from the RGPS Head to the last connected base station. If a long cable run needs to be broken into pieces, minimize the number of breaks in the cable.

DRAFT

Chapter 3: How to Unpack the SC 4812ET BTS

This section includes...

Unpacking the SC 4812ET BTS 59
Materials Needed 59
Order of Unpacking 60
Equipment Identification 60
Overview 61
How the Cabinet is Shipped 61
How to Unpack a Cabinet 62
Unpack Procedure 62
How to Inspect for Damage 66
How to Inspect Equipment for Damage 66

Tables

Table 3-1: Unpacking Cabinet (Wood Shipping Crate) 62
Table 3-2: Unpacking Cabinet (Cardboard Shipping Carton) . . 63
Table 3-3: Inspecting Cabinets for Damage 66

Figures

Figure 3-1: SC 4812ET RF Cabinet 60
Figure 3-2: SC 4812ET Power Cabinet 61
Figure 3-3: Wood Shipping Crate 64
Figure 3-4: Cardboard Shipping Carton 65

Unpacking the SC 4812ET BTS

This chapter provides the procedures necessary to identify, unpack, and inspect the equipment for damage.

Materials Needed

- Tin Snips
- Knife or Scissors

DRAFT

Order of unpacking

The unpacking process requires that the following procedures be completed in the order shown:

1. Identify the equipment
2. Unpack the RF Cabinet
3. Unpack the Power Cabinet
4. Inspect the equipment for damage

Equipment Identification

Use Figure 3-1 and Figure 3-2 to visually identify the SC 4812ET RF and Power Cabinet, respectively.

Figure 3-1: SC 4812ET RF Cabinet

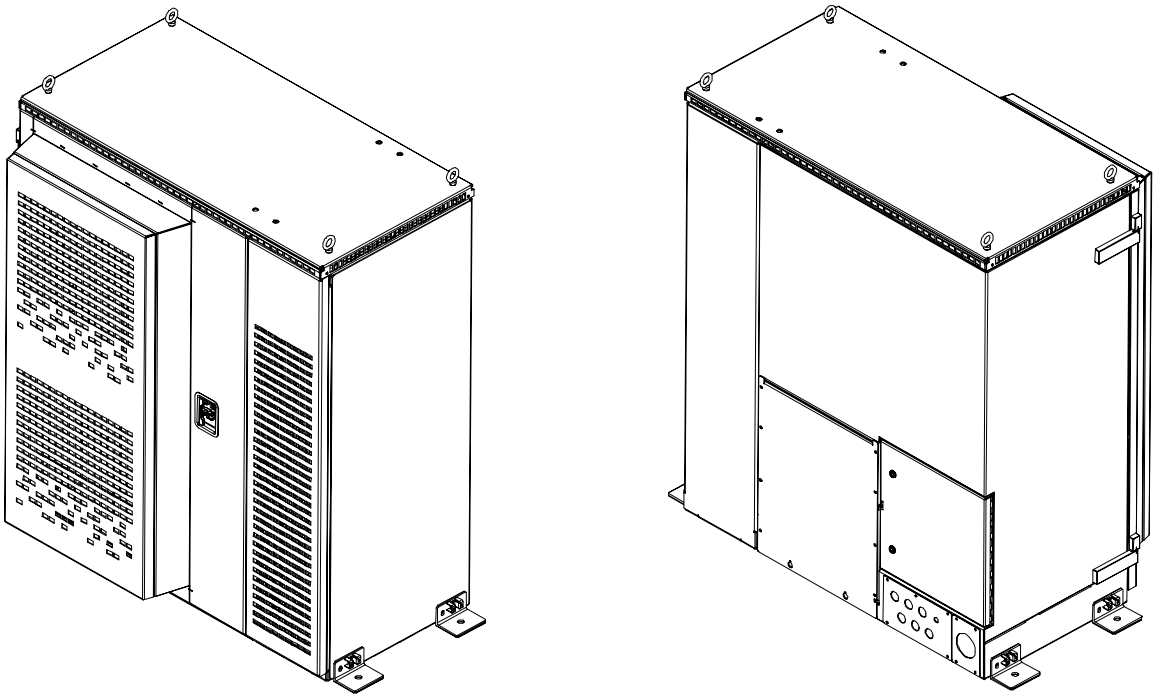

DRAFT

Figure 3-2: SC 4812ET Power Cabinet

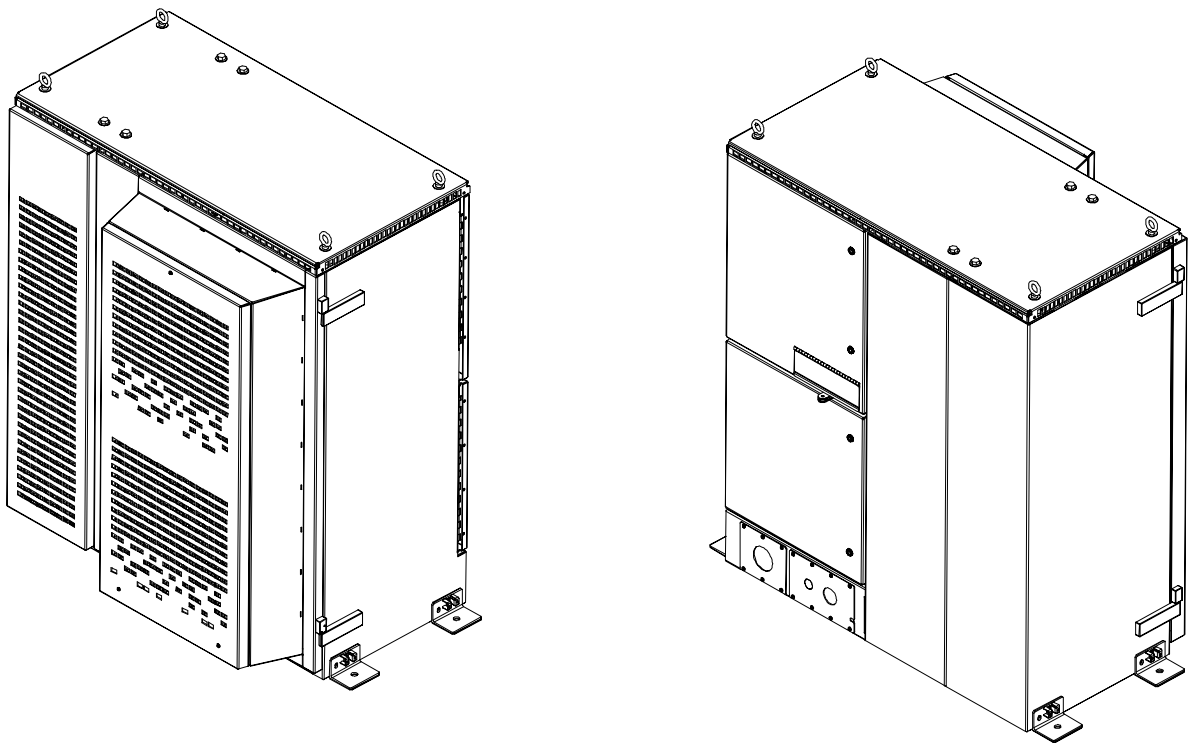

Overview

The purpose of this section is to describe how the SC 4812ET RF and Power Cabinets are packaged for shipping and how to correctly unpack the cabinets in preparation for installation.

How the Cabinet is Shipped

The cabinets are packed standing up in either cardboard or wood cartons (see Figure 3-3 and Figure 3-4). The RF Cabinet is shipped fully assembled and all internal cabling installed. The Power Cabinet is shipped without the batteries installed.

DRAFT

How to Unpack a Cabinet

WARNING

- The steel bands surrounding the carton can spring out from the carton when the bands are cut. To avoid personal injury, stand safely to the side of the bands while cutting.
- A fully loaded RF Cabinet can weigh up to 635 Kg (1400 lbs), and a Power Cabinet as shipped (without the batteries installed) can weigh up to 544 kg (1200 lbs).
- If a cabinet is tipped more than 10 inches from vertical, it is in danger of tipping over. Handle with extreme caution to avoid tipping.

CAUTION

Do NOT lift or attempt to move the RF or Power Cabinet by the doors, they will not support this type of loading and may be damaged in the process.

Unpack Procedure

Wood Shipping Crate

Use Table 3-1 to properly unpack the RF and Power Cabinet if the wood shipping create was used.

Table 3-1: Unpacking a Cabinet (Wood Shipping Crate)

Step	Action
1	Inspect the crates and cartons for damage. (Refer to Figure 3-3). **NOTE** It is recommended that two (2) people perform this procedure.
2	Loosen the latches on the bottom of the crate.
3	Remove the clips holding the top piece of wood, and remove the top piece of the crate.
4	Remove the clips holding the side pieces of wood, and remove the sides of the crate.

. . . continued on next page

DRAFT

Table 3-1: Unpacking a Cabinet (Wood Shipping Crate)	
Step	**Action**
5	Using appropriate lifting device, remove cabinet from bottom pallet.
6	Immediately inspect the equipment for damage, (see Table 3-3) and report the extent of any damage to the transport company and to the appropriate engineering/management personnel.

Cardboard Shipping Carton

Use Table 3-2 to properly unpack the RF and Power Cabinet if the cardboard shipping carton was used.

Table 3-2: Unpacking a Cabinet (Cardboard Shipping Carton)	
Step	**Action**
1	Inspect the cartons for damage. (Refer to Figure 3-4). **NOTE** It is recommended that two (2) people perform this procedure.
2	Using tin snips, cut each outer steel band that surrounds the carton.
3	Lift off cardboard carton.
4	Using appropriate lifting device, remove cabinet from bottom pallet.
5	Immediately inspect the equipment for damage, (see Figure 3-4) and report the extent of any damage to the transport company and to the appropriate engineering/management personnel.

DRAFT

Figure 3-3: Shipping Crate (Wood)

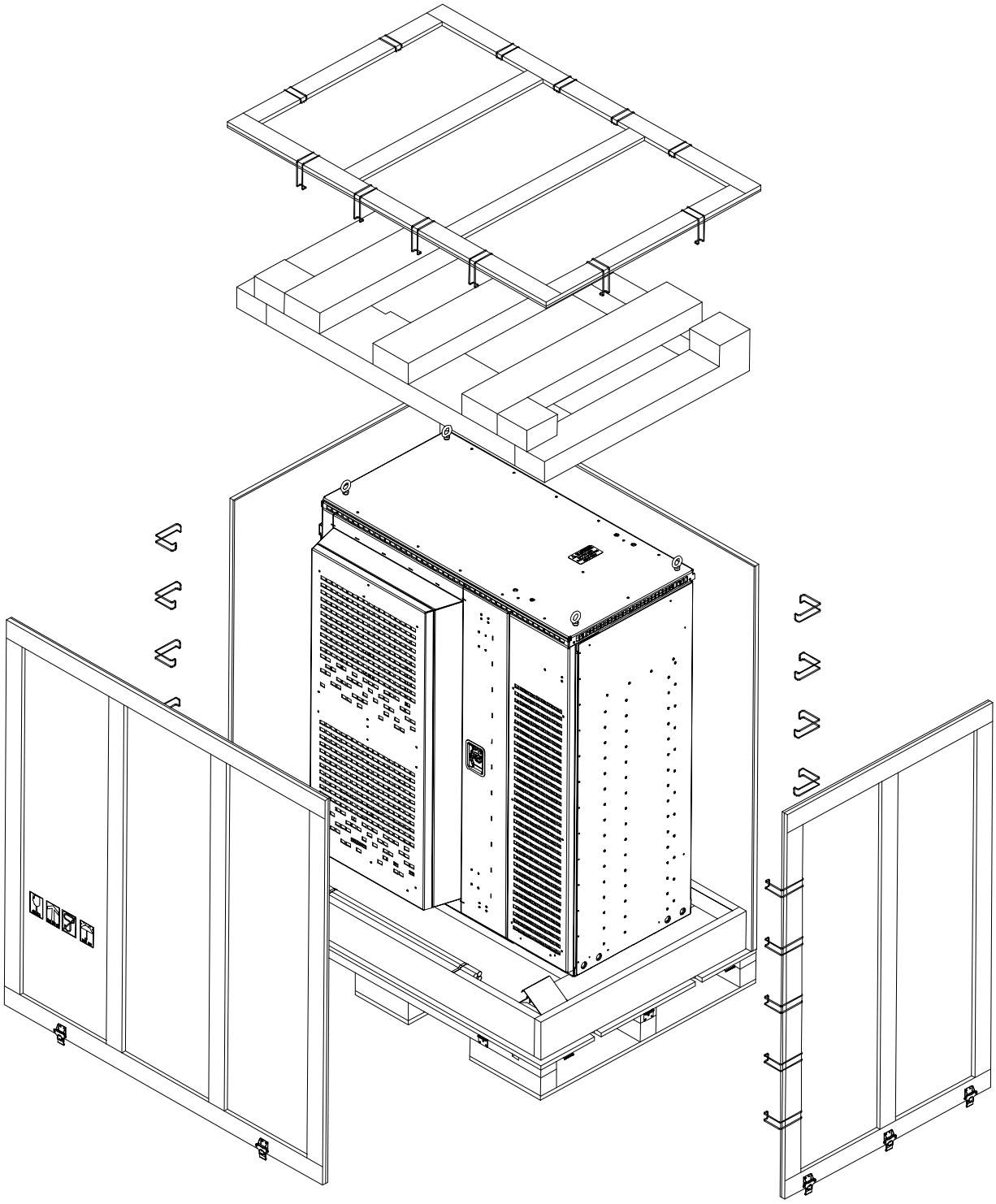

DRAFT

Figure 3-4: Cardboard Shipping Carton

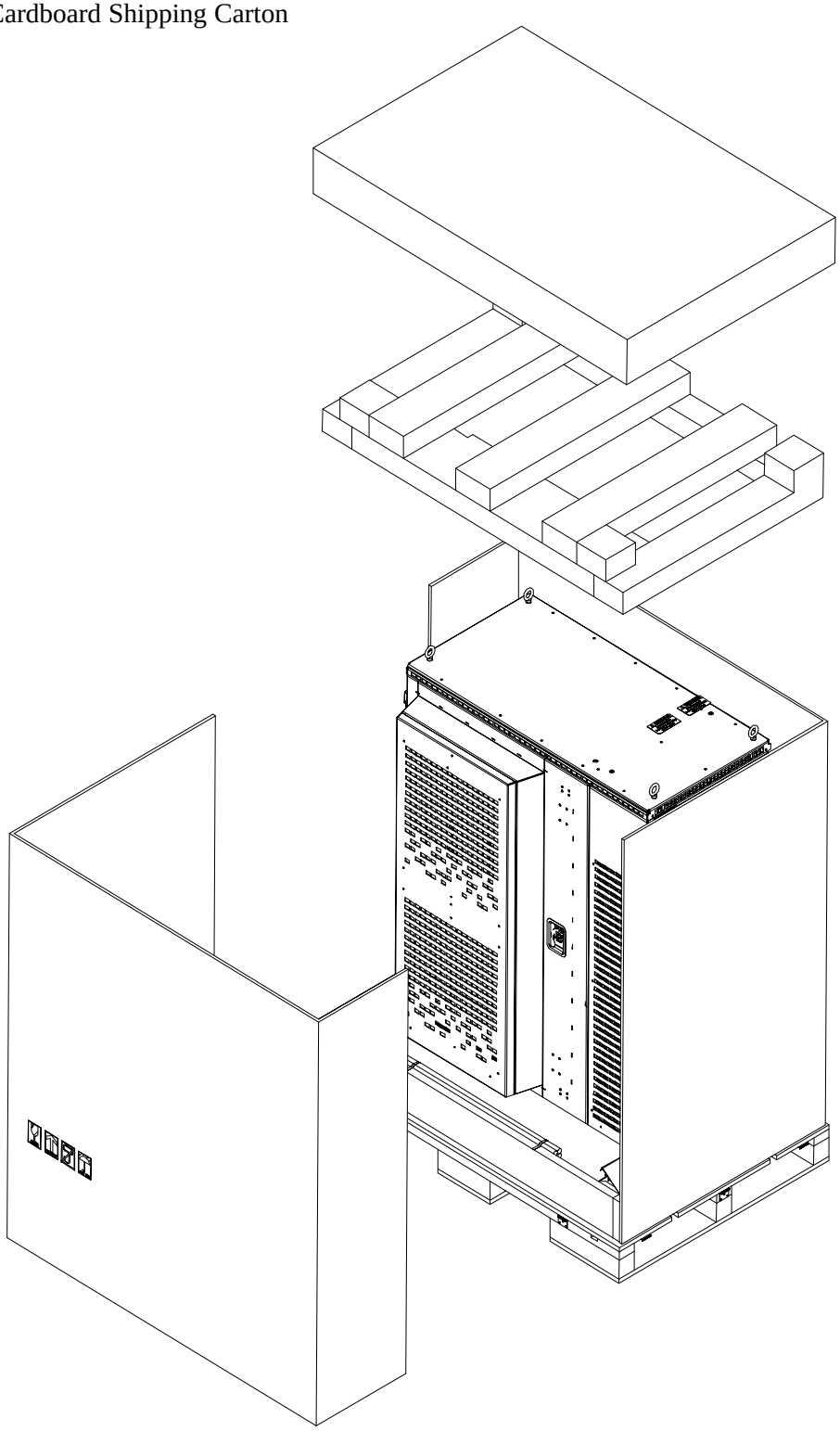

DRAFT

How to Inspect for Damage

Before installing any equipment, inspect it for damage as described in Table 3-3. Report any damage found to the appropriate supervisory personnel.

WARNING

- Static sensitive equipment requires the use of ESD protective gear such as a wriststrap to be used during the installation and repair.
- A wriststrap is supplied with the installation hardware and the ESD jack is located in the C–CCP Shelf in the RF Cabinet (Figure 1-6).

How to Inspect Equipment for Damage

Table 3-3: Inspecting Cabinets for Damage

Step	Action
1	Inspect the exterior of the RF and Power Cabinet for: – Dents – Scratches – Squareness of the cabinet.
2	Inspect the interior of the RF and Power Cabinet for: – Bent FRU brackets – Dislodged FRUs – Cables that may have become disconnected.
3	Report any damage found to the appropriate supervisory personnel.

DRAFT

MOTOROLA

Chapter 4:Cabinet Mounting

This section includes...

Overview 68
Removing the Front Doors (Optional) 68
Existing Concrete Pad Mounting Procedure 69
Rooftop (Elevated Substructure) Mounting Procedure 71
New Concrete Pad Mounting 72
Battery and Heater Pad Installation 73
Installing Batteries in the Power Cabinet 76

Tables

Table 4-1: Removing Front Cabinet Doors 68
Table 4-2: Concrete Pad Mounting 69
Table 4-3: Rooftop (Elevated Substructure) Mounting 72
Table 4-4: New Concrete Pad Mounting 73
Table 4-5: Installing a Battery Heater Pad 75
Table 4-6: Installing a String of Batteries 76
Table 4-7: Materials Required for Battery Cabling 77
Table 4-8: Power Cabinet Battery Cabling 77

Figures

Figure 4-1: Front Cabinet Door Hinge 69
Figure 4-2: Cabinet Mounting Brackets 70
Figure 4-3: Mounting Bolt Configuration 71
Figure 4-4: Battery Heater Pad 74
Figure 4-5: Typical 12V Battery 76
Figure 4-6: Power Cabinet – Batteries Installed, Doors Removed 78
Figure 4-7: Partial Cross–Section View of Battery Compartment 79

DRAFT

Overview

This chapter covers the step–by–step instructions for mounting the RF and Power Cabinet.

CAUTION

Do NOT lift or move the RF or Power Cabinet by the doors, they will not support this type of loading and may be damaged in the process.

Removing the Front Doors (Optional)

WARNING

Do Not remove the front cabinet doors unless absolutely required.

To facilitate the movement of the RF or Power Cabinet through doorways or passageways with limited clearance, the front doors of the cabinets can be removed. The procedure to do this is detailed in Table 4-1.

Table 4-1: Procedure to Remove the Front Cabinet Doors (if required)

Step	Action
1	Open the primary front door.
2	Disconnect the Heat Exchanger Power and Alarm cables from the Heat Exchanger.
3	For each hinge, loosen the screw that secures the door to the hinge (See Figure 4-1).
4	Remove the windstay latch at the bottom of the door.
5	Lift the door straight up off the hinges. **! CAUTION** The front door of both the RF and Power Cabinet can weigh up to 77 kg (170 lbs). Use extreme care when handling to avoid damage to the door, heat exchanger, and gasket.
6	Repeat for the battery cabinet door of the Power Cabinet if required.

DRAFT

Figure 4-1: Front Cabinet Door Hinge (Close-up View)

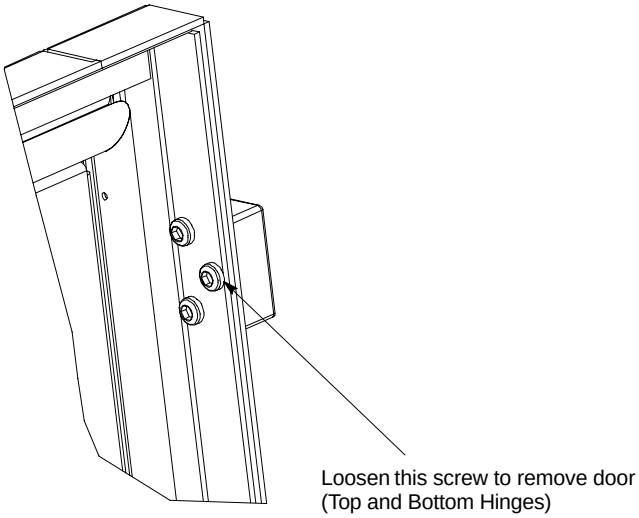

Existing Concrete Pad Mounting Procedure

Mounting the cabinet on a pre–existing concrete pad requires that the mounting holes be drilled using the procedures in Chapter 2 of this manual. Follow the procedures in Table 4-2 to mount each cabinet.

Table 4-2: Concrete Pad Mounting

Step	Action
1	Fasten mounting brackets (see Figure 4-2) onto cabinet with M12 bolts (supplied in installation hardware). Do **NOT** torque the bolts yet. Align the cabinet over the mounting holes. **! CAUTION** Do NOT use the cabinet doors as a hand hold to move the cabinet around, this could damage the door hinges
2	Install the anchor bolts in the four (4) mounting locations in the mounting brackets attached to the cabinet base. Tighten the bolts to proper torque recommended by the manufacturer. **△ WARNING** Motorola recommended anchor bolts must be used to assure safety in the event of an earthquake (CGDS97400036). These bolts should be tightened to 80 N–m (60 ft–lbs.).
3	Tighten the M12 bolts attaching the mounting brackets to the cabinet, torque to 135 N–m (100 ft–lbs) with a 19mm (3/4”) torque wrench.

. . . continued on next page

DRAFT

Table 4-2: Concrete Pad Mounting	
Step	**Action**
4	Remove the four (4) eye–bolts (see Figure 4-2) on the top of the cabinet, replace them with the bolts and washers supplied with the installation hardware using a 24 mm (15/16”) hex driver. Torque to 80 N–m (60 ft–lbs).
5	Install the wiring as described in Chapter 5 of this manual.

NOTE

The isolation washers supplied in the hardware installation kit are provided to give the installer the option of electrically isolating the cabinet should the situation require it. The use of the washers is not a requirement. The grounding of each site is unique, and the isolation of the cabinet is a site specific decision.

Figure 4-2: Cabinet Mounting Brackets

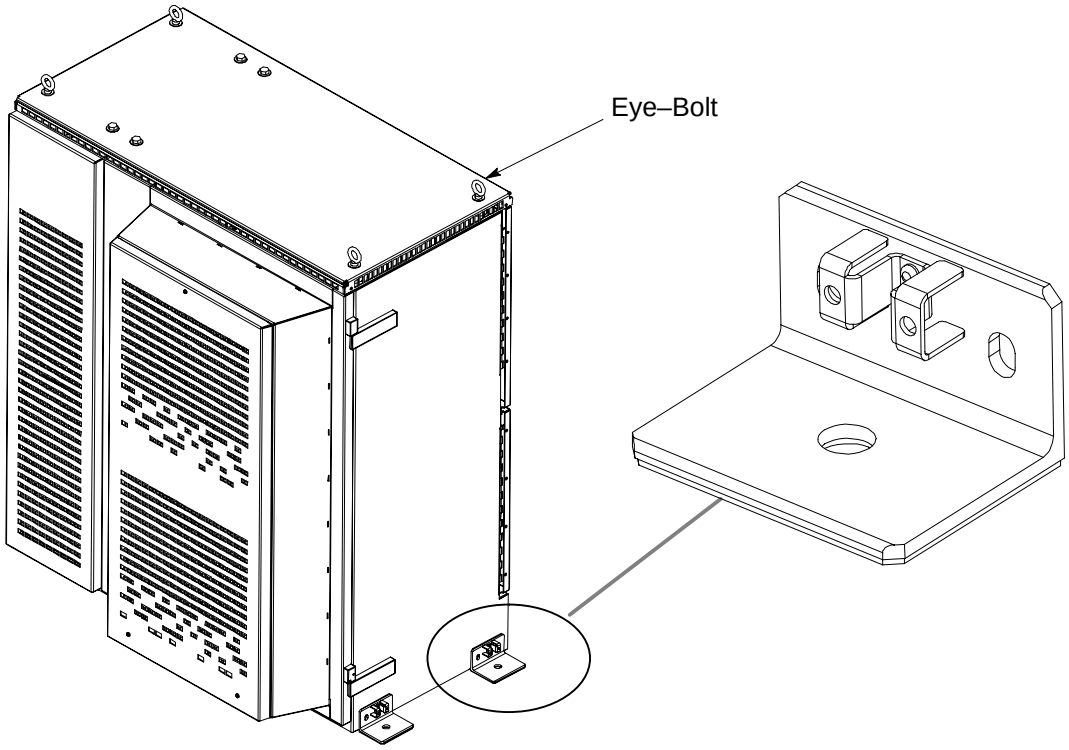

NOTE

Use supplied M12 washers when fastening the mounting brackets to the cabinet.

. . . continued on next page

DRAFT

Figure 4-3: Mounting Bolt Configuration

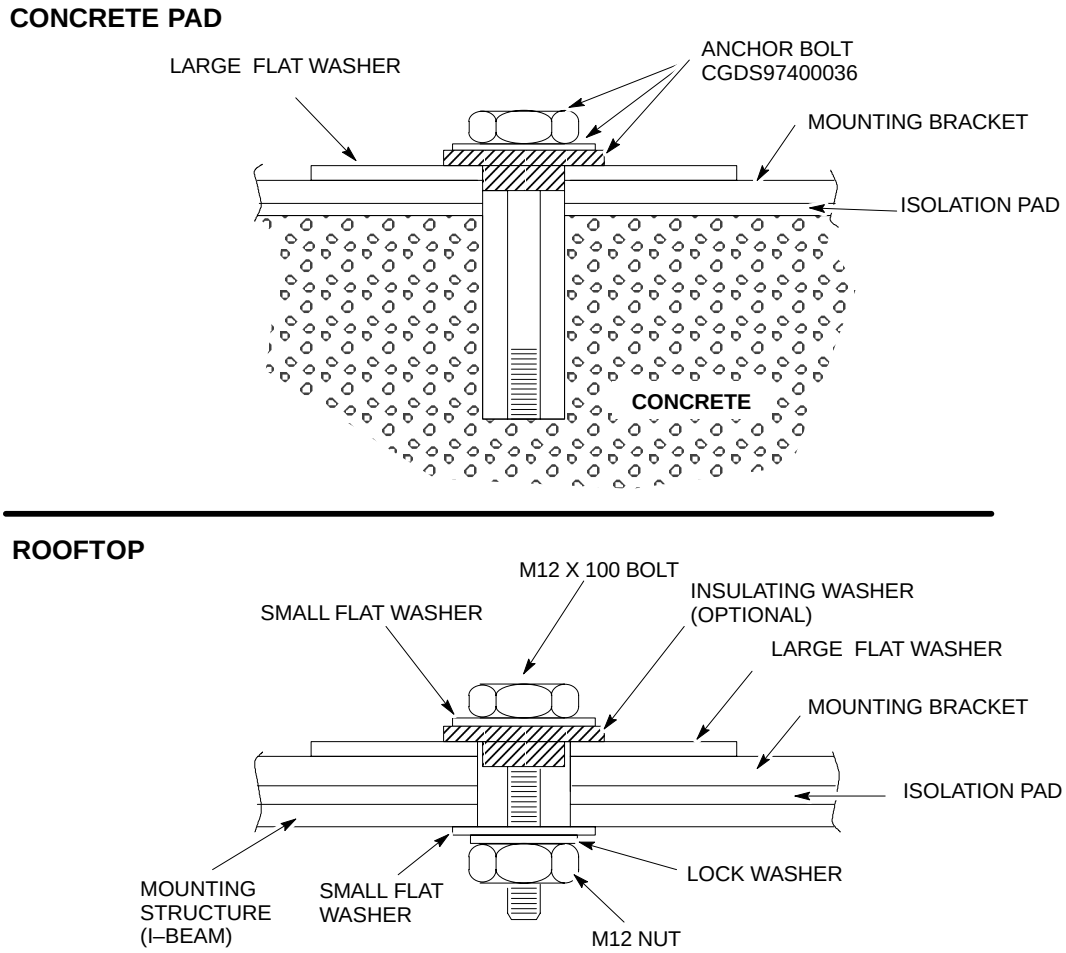

Rooftop (Elevated Substructure) Mounting Procedure

Mounting the cabinet on a rooftop requires that the roof load carrying support structure be in place prior to mounting the cabinet. See Chapter 2, “Site Preparation” for details.

WARNING

Roof load carrying limits must be reviewed and an appropriate support structure must be installed to support the RF and Power Cabinet as required.

Once the support structure is in place, follow the procedures in Table 4-3 to mount the cabinet.

. . . continued on next page

DRAFT

Table 4-3: Rooftop (Elevated Substructure) Mounting	
Step	**Action**
1	Fasten mounting brackets (see Figure 4-2) onto cabinet with M12 bolts and washers (supplied in installation hardware). Do **NOT** torque the bolts yet. **! CAUTION** Do NOT use the cabinet doors as a hand hold to move the cabinet around, this could damage the door hinges
2	Place the cabinet on top of the substructure, so that the mounting holes are aligned with the holes in the cabinet mounting brackets.
3	Install the mounting bolts into the four (4) mounting locations in the mounting brackets attached to the cabinet bast. Tighten the bolts to the proper torque recommended by the manufacturer of the bolts. If using the M12 bolts supplied with the installation hardware, tighten the bolts to 80 N–m (60 ft–lbs.) torque.
4	Tighten the M12 bolts attaching the mounting brackets to the cabinet. Torque to 135 N–m (100 ft–lbs) within a 19 mm (3/4”) torque wrench
5	Remove the four (4) eye–bolts (see Figure 4-2) on the top of the cabinet, replace them with the bolts and washers supplied with the installation hardware using a 24 mm (15/16”) hex driver. Torque to 80 N–m (60 ft–lbs).
6	Install the wiring as described in Chapter 5 of this manual.

NOTE

The isolation washers supplied in the hardware installation kit are provided to give the installer the option of electrically isolating the cabinet should the situation require it. The use of the washers is not a requirement. The grounding of each site is unique, and the isolation of the cabinet is a site specific decision.

New Concrete Pad Mounting

Mounting the cabinet on a new concrete pad which has been designed to install the cabinet offers some unique opportunities, as the cables, wires, and conduits can all be routed into the cabinet from the bottom through the concrete pad.

After the pad has been poured following the procedure in Chapter 2, the concrete has cured adequately and the mounting holes drilled as detailed in Chapter 2, follow the procedures in Table 4-4 to install each cabinet.

. . . continued on next page

DRAFT

Table 4-4: New Concrete Pad Mounting	
Step	**Action**
1	Fasten mounting brackets (see Figure 4-2) onto the cabinet with M12 bolts and washers (supplied in installation hardware). Do **NOT** torque bolts yet. Align the cabinet over the holes. **! CAUTION** Do NOT use the cabinet doors as a hand hold to move the cabinet around, this could damage the door hinges
2	Install the anchor bolts in the four (4) mounting locations in the mounting brackets attached to the cabinet base. Tighten the bolts to proper torque recommended by the manufacturer. **△ WARNING** Motorola recommended anchor bolts must be used to assure safety in the event of an earthquake (CGDS97400036). These bolts should be tightened to 80 N–m (60 ft–lbs.).
3	Tighten the M12 bolts attaching the mounting brackets to the cabinet, torque to 135 N–m (100 ft–lbs) with a torque wrench.
4	Remove the four (4) eye–bolts (see Figure 4-2) on the top of the cabinet, replace them with the bolts and washers supplied with the installation hardware using a 24 mm (15/16”) hex driver, torque to 80 N–m (60 ft–lbs).
5	Install the wiring as described in Chapter 5 of this manual.

NOTE

The isolation washers supplied in the hardware installation kit are provided to give the installer the option of electrically isolating the cabinet should the situation require it. The use of the washers is not a requirement. The grounding of each site is unique, and the isolation of the cabinet is a site specific decision.

Battery and Heater Pad Installation

This section covers the step–by–step instructions for mounting the batteries and heater pads into the Power Cabinet. The Power Cabinet can accommodate a total of 12 strings of 2 batteries (24 batteries total) and 12 heater pads (1 per battery string). The actual number of battery strings and heaters installed depends upon system configuration. This section reviews the procedure to install one (1) string of batteries and 1 heater pad. This should be repeated until all batteries and heaters are installed.

. . . continued on next page

DRAFT

NOTE

Batteries and heater pads in the Power Cabinet MUST be installed in the bottom slots of the battery compartments and building up. The first string should be installed in “position 1” (see Figure 4-6), the second in “position 2” and so on, until all batteries are installed. The heater pad power cables are ”daisy–chained” from the bottom in each battery compartment (see Figure 4-7). The last (top) heater pad cable must be terminated with a connector that is shipped installed on the cable located in the bottom slot of each battery compartment (positions 1 and 2).

Battery Heater Installation

Table 4-5 reviews the procedure to install a battery heater pad. This procedure should be repeated until all heater pads are installed.

NOTE

ALL heater pads should be installed and cables properly dressed before ANY batteries are installed.

Figure 4-4: Battery Heater Pad

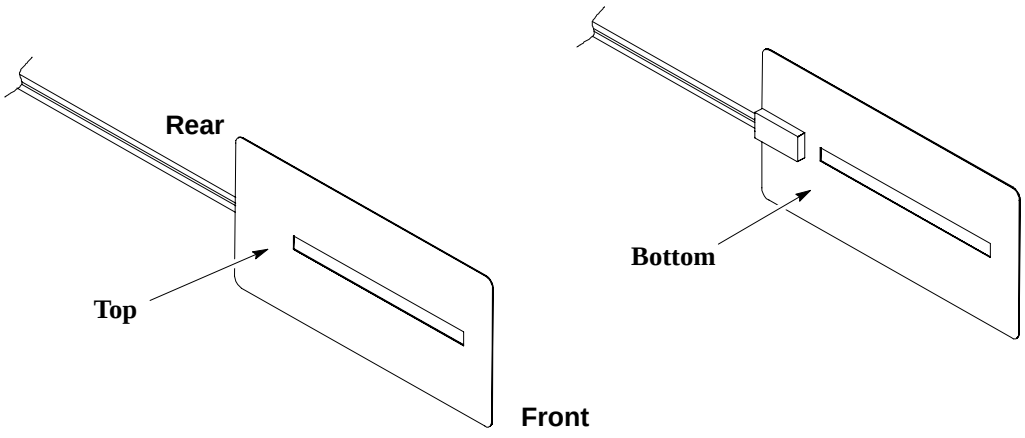

NOTE

Bottom side of the Heater Pad has adhesive liners that must be removed prior to installation.

. . . continued on next page

DRAFT

Table 4-5: Installing a Battery Heater Pad	
Step	**Action**
1	**△ WARNING** Ensure battery heater circuit breakers in ACLC are ”OFF” before heater pad installation. Remove the battery mounting bracket (see Figure 4-6) for the appropriate battery slot.
2	If this is the first heater pad installed in the battery cabinet (and therefore located in one of the two bottom battery slots) remove the “Heater Pad Cable Terminating Connector” from the end of the factory installed cable in the bracket at the back of the bottom slot of the battery compartment (see Figure 4-7). *** IMPORTANT** Save this terminating connector, it must be used to terminate the cable of the last heater pad in the battery compartment.
3	Remove the adhesive liners, and slide the heater pad into the slot, ensuring proper orientation (see Figure 4-4) and that the heater pad rests flat on the battery shelf with the cable to the rear.
4	Connect the short heater pad cable to either: – The cable (factory installed) to the bracket in the back of the bottom slot, if the heater pad is in position 1 or 2 (see Figure 4-6 and Figure 4-7). – The long cable of the heater pad in the slot below, if the heater pad is not the first in the compartment (see Figure 4-7). *** IMPORTANT** Verify that the connector latches engage (there should be an audible “click”) when connecting cables.
5	If the heater pad is the last (top) in the series of heater pads (and therefore does not have a heater pad above it), terminate the long cable with the terminating connector removed from the factory installed cable in step 2.
6	Repeat this procedure until all heater pads are installed, then proceed to the battery installation.

IMPORTANT

After all of the heater pads have been installed and cables connected, dress the cables behind the battery shelves in each battery compartment. When dressing cables, consideration should be given to future accessibility of the cables should a heater ever need to be replaced. Do not zip tie cables to battery shelves or each other. Also, do not tangle cables in one another. Ensure cables are routed such that a heater pad cable connector for one shelf can be pulled up from the shelf below it without having to remove the batteries below.

DRAFT

Installing Batteries in the Power Cabinet

Table 4-6 reviews the procedure to install a string of batteries in the Power Cabinet (see Figure 4-5 and Figure 4-6), this procedure should be repeated until all battery strings have been installed.

CAUTION

Heater pads must be installed and heater pad cables properly dressed behind battery shelves before batteries are installed.

NOTE

Do not install the batteries until the Power Cabinet has been bolted down.

Table 4-6: Installing a String of Batteries

Step	Action
1	Remove battery mounting bracket (see Figure 4-6) from the shelf.
2	Install each battery into it's slot, and slide the battery all the way into the cabinet, ensure that the battery terminals face forward. △ **WARNING** Use care when handling batteries, as they can weigh up to 48 kg (105 lbs). Do NOT drop the batteries.
3	Replace the battery mounting brackets, and torque the nuts to 5 N–m (45 in–lbs) with a 10 mm driver.

Figure 4-5: Typical 12V Battery

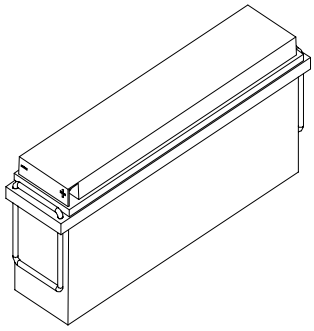

Power Cabinet Battery Cabling

The objective of this procedure is to install the Power Cabinet battery connections. The quantity of batteries installed depends on the system configuration. This section will detail the installation of a "string" of batteries, this should be repeated until all battery strings have been installed.

. . . continued on next page

DRAFT

NOTE

A string of batteries consists of two (2) batteries connected in series. The Power Cabinet can accommodate up to twelve (12) strings of batteries.

WARNING

- All AC and DC power should be removed from the system until all connections are made.
- Ensure that all of the battery string breakers are off (white the strip on the bracket is visible), there are a total of 12 battery string circuit breakers.

Materials Needed

Table 4-7 lists the necessary materials. Quantities will be determined by system configuration.

Table 4-7: Materials Required for Battery Cabling

Qty per String	Description
1	Battery Terminal Strap (supplied with the Installation Hardware)
4	Fasteners, 2 per Battery (supplied with Batteries)
1	Wire Brush
As Required	Copper–based conductive Grease (Berndy “Penetrox” or equivalent).

Power Cabinet Battery Cabling Procedure

This procedure is used to cable and connect a string of batteries in the Power Cabinet, it should be repeated until all batteries have been installed.

NOTE

This procedure assumes the batteries have already been installed.

Table 4-8: Power Cabinet Battery Cabling

Step	Action
1	Clean battery terminals with a wire brush.
2	Apply liberal coating of “conductive” grease to all battery terminals,

. . . continued on next page

DRAFT

Table 4-8: Power Cabinet Battery Cabling	
Step	**Action**
3	Attach the battery terminal strap from the positive (+) terminal on battery “A” (see Figure 4-6) to the negative (–) terminal on battery “B” using the fastening hardware supplied with the batteries. Torque to the recommended value (per battery manufacturer; if using Johnson Controls batteries, torque is 12.4 N–m (110 in–lbs)).
4	Secure the black cable supplied (attached to the black “Return Buss” on the left side of the battery compartment) to the negative (–) terminal on battery “A” with the fastening hardware supplied with the batteries. Torque to the recommended value shown on the battery (per battery manufacturer; if using Johnson Controls batteries, torque to 12.4 N–m (110 in–lbs)).
5	Secure the red cable installed (attached to the red “+ 27V Buss” on the right side of the battery compartment) to the positive (+) terminal on battery “B” with the fastening hardware supplied with the batteries. Torque to the recommended value shown on the battery (per battery manufacturer; if using Johnson Controls batteries, torque to 124 N–m (110 in–lbs).

Figure 4-6: Power Cabinet with Batteries Installed (Doors Removed for Clarity)

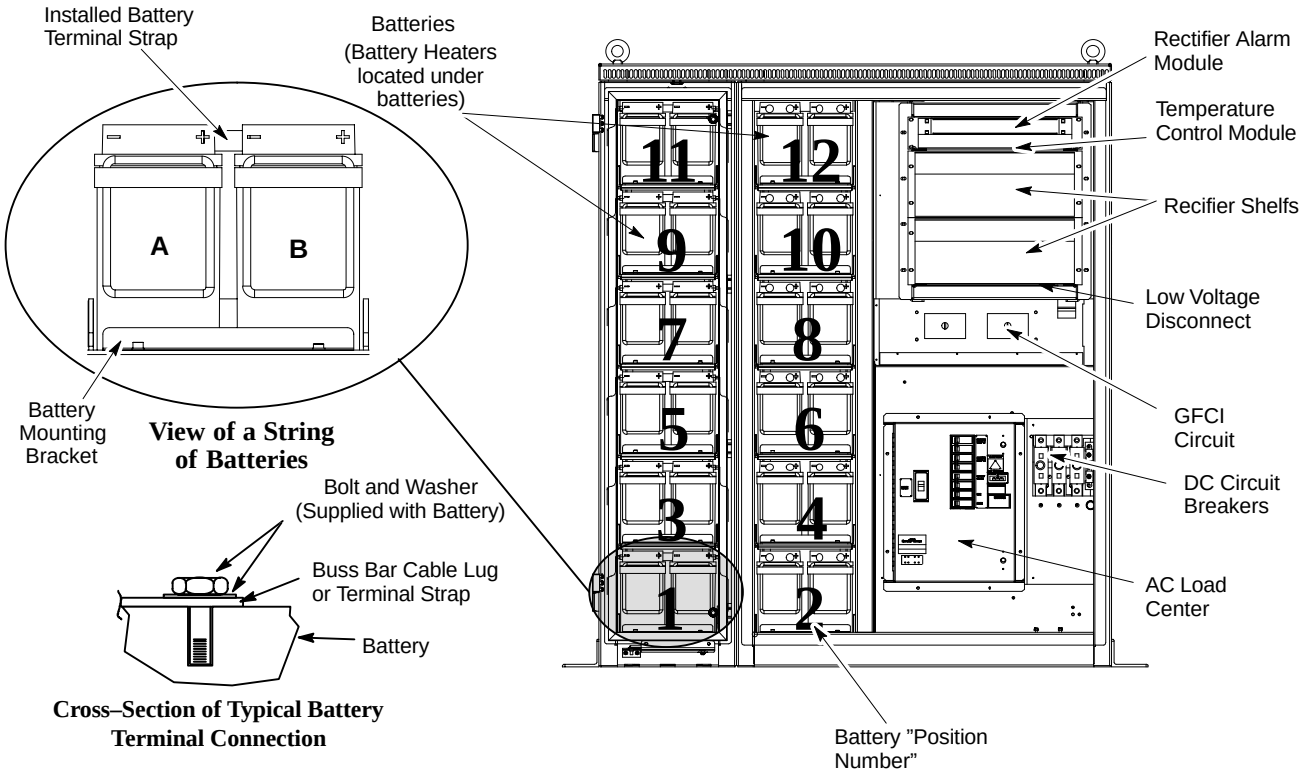

. . . continued on next page

DRAFT

Figure 4-7: Partial Cross–Section View of Battery Compartment

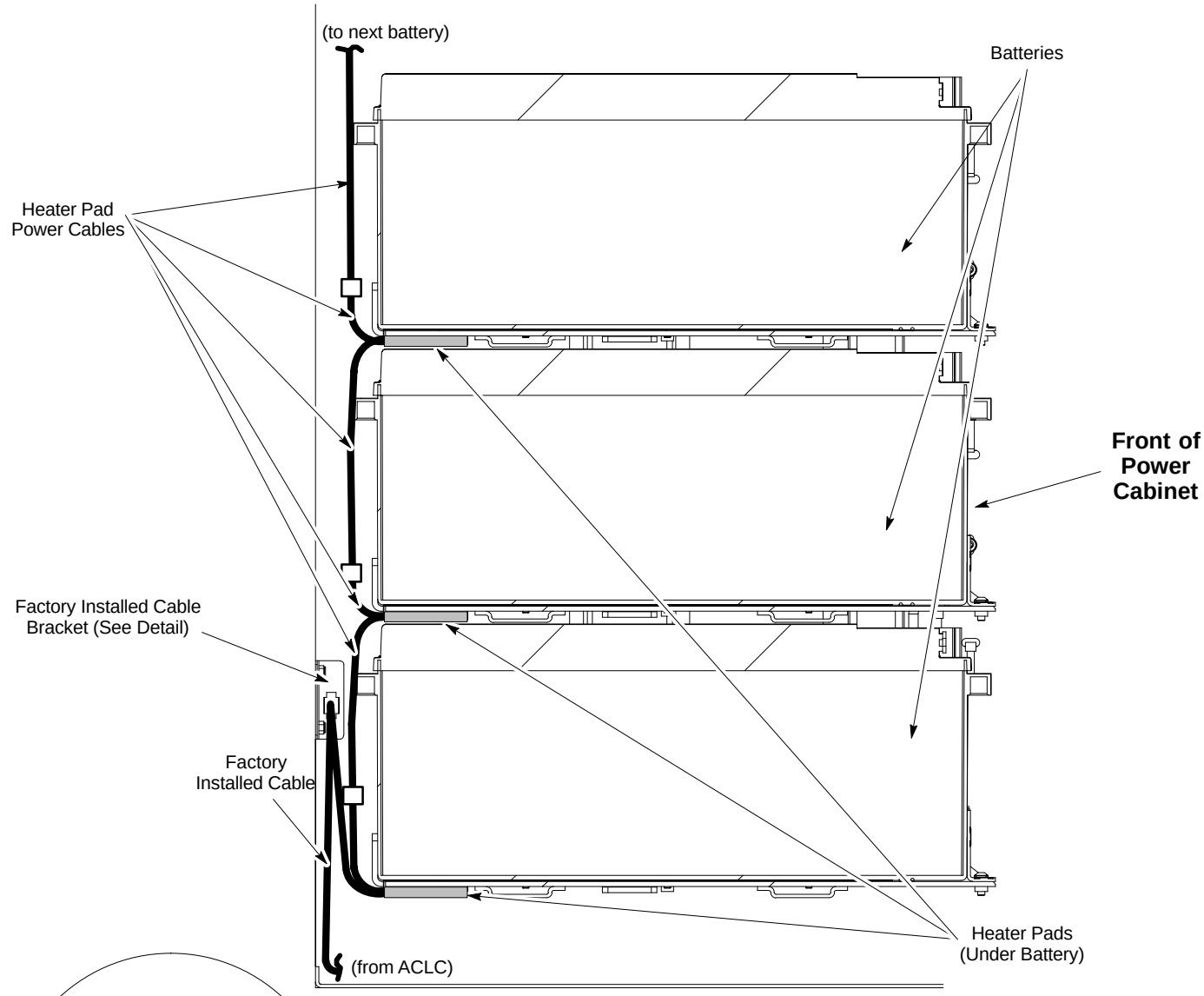

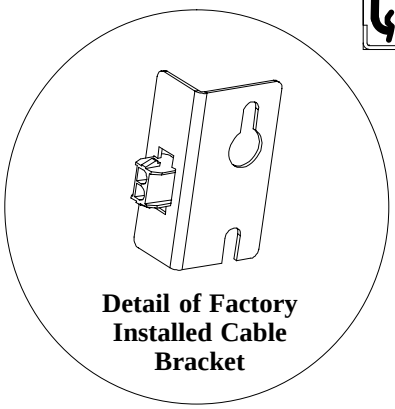

Detail of Factory Installed Cable Bracket

Important:

After all of the heater pads have been installed and cables connected, dress the cables behind the battery shelves in each battery compartment. When dressing cables, consideration should be given to future accessibility of the cables should a heater ever need to be replaced. Do not zip tie cables to battery shelves or each other. Also, do not tangle cables in one another. Ensure cables are routed such that a heater pad cable connector for one shelf can be pulled up from the shelf below it without having to remove the batteries below.

DRAFT

Notes

DRAFT

MOTOROLA

Chapter 5:Cabinet Cabling

This section includes...

Overview 83
Cabinet I/O Area 83
Simplified BTS Cabling Diagram 86
Cable descriptions 87
RF Cabinet Earth Ground 90
RF Cabinet Alarm, Span Line and Modem Cabling 90
Input and Output Cabling 90
Alarm Signal Specifications 94
Alarm and Span Line Cable Pin/Signal Information 94
RGPS Cabling Introduction 91
Punch Block for the Remote GPS (RGPS) 93
RF GPS Cabling (if applicable) 94
RF GPS Cabling Procedure 94
LFR Cabling (if applicable) 95
LFR Cable Pin/Signal Information 95
RF Cabling Main and 103
Procedure for Rear Installation 104
Procedure for Bottom Installation 105
Power Cabinet Earth Ground 106
Power Cabinet Alarm Cable 107
Power Cabinet Punch Block 107
Power Cabinet Alarm Cable Pin/signal Information 110
DC Power Interconnect to RF Cabinet 110
Power input connections 106
AC Power Cabling 113
AC Load Center 114
Cable Labels 114
Power Cabinet AC Current Requirements 116
Heat Dissipation 117

Tables

Table 5-1: BTS Cable Descriptions and Part Numbers 87

5

DRAFT

Table 5-2: Materials Required for Earth Ground Cabling 89
Table 5-3: Procedure to Install RF Cabinet Earth Ground Cables 89
Table 5-4: Materials Required for Alarm, Span, and Modem Cabling 92
Table 5-5: Alarm, Span, and Modem Line Cable Installation . . 92
Table 5-6: External Alarm Connector Characteristics and 94
Table 5-7: External Alarm Connector and Requirements 94
Table 5-8: Materials Required for RGPS Cabling 97
Table 5-9: RGPS Cable Install Procedure 98
Table 5-10: Punch Block for the Remote GPS 98
Table 5-11: Materials Required for RF GPS Cabling 99
Table 5-12: RF GPS Cable Install Procedure 99
Table 5-13: Materials Required for LFR Cabling 100
Table 5-14: LFR Cable Install Procedure 100
Table 5-15: Pin/Signal Information for LFR Cable 100
Table 5-16: BTS Sector/Carrier Configurations 101
Table 5-17: Antenna Cables for Duplex 120 Degree Sector . . . 101
Table 5-18: Antenna Cables for Duplex 60 Degree Sector 102
Table 5-19: Antenna Cables for Non–Duplexed 120 Degree . . 96
Table 5-20: Antenna Cables Non–duplexed 60 Degree Sector . 103
Table 5-21: Install Main RF Cabling (Rear Wall of RF Cabinet) 104
Table 5-22: Install Main RF Cabling (Bottom of RF Cabinet) . 105
Table 5-23: Materials Required for Earth Ground Cabling 106
Table 5-24: Procedure to Install Earth Ground Cables 106
Table 5-25: Materials Required for Power Cabinet Alarm Cabling 109
Table 5-26: Power Cabinet Alarm Cable Install Procedure 109
Table 5-27: Pin–Out for Power Cabinet Punch Block 110
Table 5-28: Wire, Lug, and Die Table 111
Table 5-29: Procedure to Install DC Power Cables 112
Table 5-30: Equipment Required for AC Power 115
Table 5-31: Procedure to Install Power Cables 115
Table 5-32: Power Cabinet AC Current Requirements 116

Figures

Figure 5-1: SC 4812ET Intercabinet I/O Detail (Rear View) . . . 85
Figure 5-2: SC4812ET Conduit I/O Panel Detail 85
Figure 5-3: Overall Cable Diagram 86
Figure 5-4: Antenna Panel Detail (Rear View) 90
Figure 5-5: 50 Pair Punch Block 91
Figure 5-6: Rubber I/O Boot Detail 93
Figure 5-7: SC 4812ET RF Cabinet 104
Figure 5-8: AC I/O Plate 107

DRAFT

Figure 5-9: Power Cabinet Punch Block 108
Figure 5-10: Connecting Power Cables 111
Figure 5-11: AC Load Center Wiring 116

Overview

This chapter provides the SC 4812ET RF and Power Cabinet inter-cabinet cabling procedures.

Review the Material

Before starting to install cables, it is recommended that you become familiar with the equipment and the cable connection locations. You can start by reviewing the information found in this chapter.

WARNING

– Do NOT wear a wrist strap when servicing the power supplies or power distribution cabling. Serious personal injury can result.
– Before starting the procedure, ensure that the Power Cabinet power cables are not connected to the main source.

CAUTION

– Static sensitive equipment requires that ESD protective gear such, as a wriststrap, be used during the installation and repair.
– A wriststrap is supplied with the installation hardware and a jack is in the C–CCP Cage in the RF Cabinet (See Figure 1-6).

DRAFT

WARNING

– A service tent [reference: Pelsue Cabinet Mounted Service Tent; Pelsue (800–525–8460) P/N CM564866M] must be in place prior to opening the main doors of the SC4812ET RF or Power Cabinet during times of inclement weather (rain, snow, sleet, or hail). This will prevent moisture from being drawn into the electronics by internal fans and damaging the equipment.

– A service tent [reference: Pelsue Cabinet Mounted Service Tent; Pelsue (800–525–8460) P/N CM564866M] with a heater is required to service the SC4812ET RF Cabinet when temperatures are below –10 Deg C (14 Deg F). Temperatures inside the tent should be above 0 Deg (32 Deg F) prior to opening the main cabinet door. This will prevent a rapid temperature change to the electronics that could result in a site outage.

Cabling Installation Order

Motorola recommends the RF and Power Cabinet inter-cabinet cabling be installed in the order shown:

1. **RF Cabinet Cabling**
   1. Earth Ground
   2. Alarm, Span Line and Modem
   3. RGPS cabling (if applicable)
   4. RF GPS cabling (if applicable)
   5. LFR Cabling (if applicable)
   6. Main RF (RX/TX) path cabling
2. **Power Cabinet Cabling**
   1. Earth Ground
   2. Battery Cabling
   3. Alarm Interconnect Cabling to RF Cabinet
   4. DC Interconnect Cabling to RF Cabinet
   5. AC Power Cabling

Cabinet I/O Area

The cabinet I/O area is used as a common point of connection for the inter–cabinet cabling. See Figure 5-1 for an overview of the I/O area for the SC 4812ET RF and Power Cabinet.

DRAFT

Figure 5-1: SC 4812ET Intercabinet I/O Detail (Rear View)

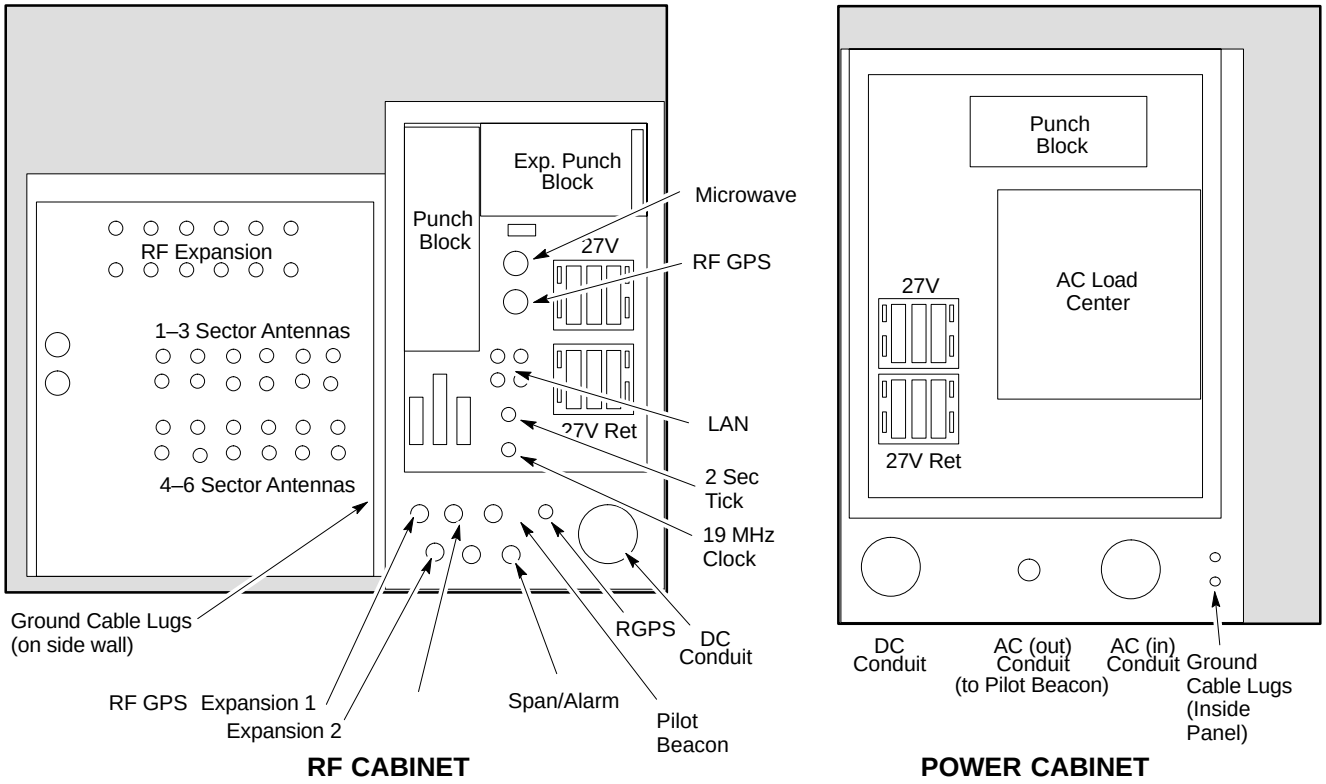

Figure 5-2: SC4812ET Conduit I/O Panel Detail

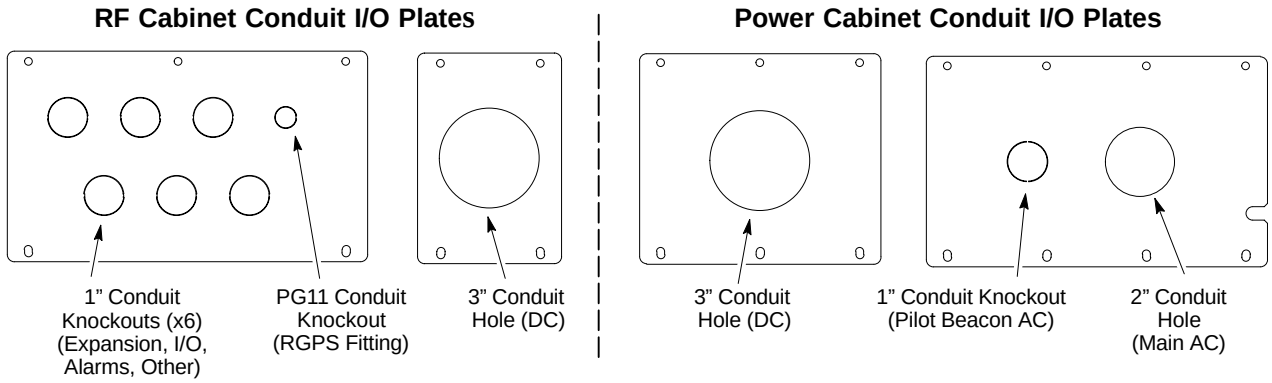

DRAFT

Simplified BTS Cabling Diagram

The overall cabling is shown in a simplified diagram Figure 5-3. Each cable is identified with a capital letter followed by a number. The letter refers to the cable label as described in Table 5-1, the number refers to the quantity of cables to be installed. Refer to this diagram when performing the cable connection procedures in the following tables.

Figure 5-3: Overall Cable Diagram

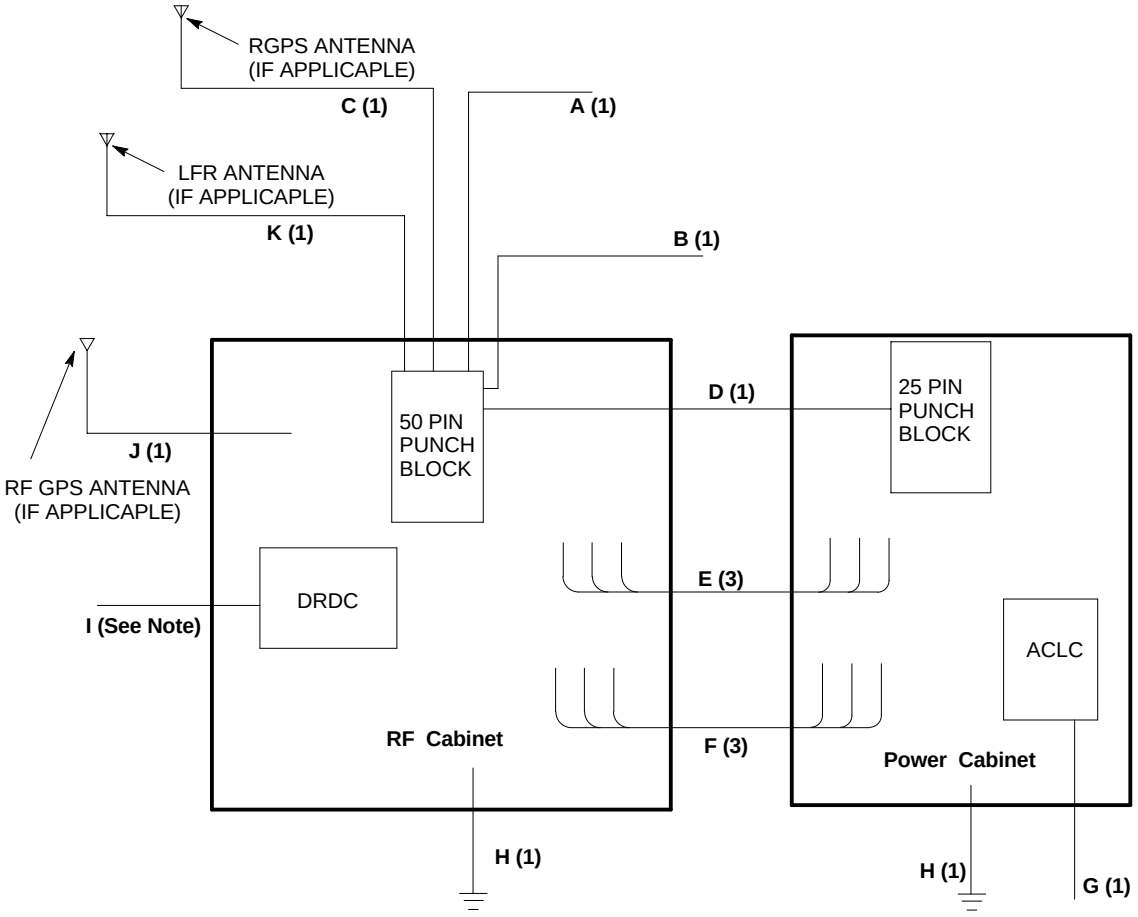

NOTE

The quantity of RF Antenna cables (I) is determined by system configuration.

DRAFT

Cable descriptions

Table 5-1 lists the RF and Power Cabinet cable description and part numbers. The cable label is used as a reference for all the cabling procedures and diagrams.

Table 5-1: BTS Cable Descriptions and Part Numbers

Cable Label	Part Number	Description
A	Customer Supplied	T1 Span Line(s) and Modem Cable #24 or #22 AWG, 26-wire, shielded twisted 13 pair, 100-Ohm, solid wire; nominal line rate at 1.544 Mbit/s. For E1: use 120–Ohm twisted pairs; nominal line rate at 2.048 Mbit/s **NOTE** The modem lines pair (2–wire) and Span Line pairs can be run on a separate cables if more appropriate for the installation.
B	Customer Supplied	Alarm (Customer I/O) Cable #24 or #22 AWG, 32-wire, shielded twisted 16 pair, 100-Ohm, solid wire.
C	T472AA	RGPS Cable and Antenna Package, 50 Ft. Cable*
	T472AB	RGPS Cable and Antenna Package, 125 Ft. Cable**
	T472AC	RGPS Cable and Antenna Package, 250 Ft.Cable**
	T472AD	RGPS Cable and Antenna Package, 500 Ft.Cable**
	T472AE	RGPS Cable and Antenna Package, 1000 Ft.Cable**
	T472AF	RGPS Cable and Antenna Package, 2000 Ft.Cable**
	T472AG	RGPS Cable Only, 50 Ft. Cable*
	T472AH	RGPS Cable Only, 125 Ft. Cable**
	T472AJ	RGPS Cable Only, 250 Ft.Cable**
	T472AK	RGPS Cable Only, 500 Ft.Cable**
	T472AL	RGPS Cable Only, 1000 Ft.Cable**
	T472AM	RGPS Cable Only, 2000 Ft.Cable**
	T472AN	RGPS Antenna Only
D	Supplied with Power Cabinet 3086039H17	Power Cabinet Alarm/Control Cable, 12–wire, shielded twisted 6 pair, solid wire: 3650 mm (12 ft.) length. **NOTE** A longer alarm/Control cable (P/N 3086039H16) 10950 mm (36 ft.) is available to order if needed.
E	Supplied with Power Cabinet 3064377A09	DC Power Cable (Quantity = 3), #2/0 AWG INS WELD cable (Red); 3650 mm (12 ft) length.

. . . continued on next page

DRAFT

Table 5-1: BTS Cable Descriptions and Part Numbers

Cable Label	Part Number	Description
F	Supplied with Power Cabinet 3064377A10	DC Power Cable (Quantity = 3), #2/0 AWG INS WELD cable (Black); 3650 mm (12 ft) length.
G	Customer Supplied	AC Power cable, Maximum Cable Size of 300 kcmil. **NOTE** The Power Cabinet is rated at 130 Amps (100 Amps continuous / 130 Amps non–continuous, in the range of 208–240V AC) see Table 5-32 for details. Maximum cable size that can be accommodated is 300 kcmil. Cabling sizing should be determined by Local Electrical Codes, using 90°C rated conductors, and derating for 50°C operation. Motorola recommends not less than #2/0 AWG (#1 BSWG; 50 mm^2) copper for buried/raceway cables to the power pedestal, with an associated power pedestal breaker size of 150 Amps for one Power Cabinet.
H	Customer Supplied	Ground Cable (Quantity 1 per cabinet), #3 BSWG (#2 AWG; 35 mm^2)
I	Customer Supplied	Antenna RF Cable, 50 Ohm coaxial, male N–type connector on one end, customer to determine other end.
J	Supplied in Kit STAN4000A	RF GPS Cable, 1/2 inch coaxial, length=50 ft. Two male N–type connectors, one end loose (to be field terminated after routing of cable through I/O boot). If lengths greater than 50 ft. are required, cable style and length should be determined by site configurations. Maximum loss <4.5 dB @ 1575 MHz for all cabling and connections between the GPS antenna and the RF Cabinet. **NOTE** A 1/2 inch cable “pigtail” should always be used to exit the cabinet before transitioning to a larger cable. This will ensure a proper seal at the rubber I/O boot. It is suggested that the supplier cable be cut to the desired length to achieve this.
K	CGDS3155A038	LFR Cable, 100 Ohm, 24 AWG, shielded twisted pair, 91.5 m (300 ft.) One 9–pin subminiature D connector and one 5–pin circular connector.
L	3086622H01	Options Power Cable, # 14 AWG; 820 mm (2.7 ft.) length **NOTE** This options power cable is shipped installed in sites that are factory equipped with CSU options.

* Cable – 12 conductor, shielded, twisted pair, 22 AWG, solid. Insulation – PVC (–40 to +60°C)
** Cable – 12 conductor, shielded, twisted pair, 22 AWG, solid. Insulation – FEP Teflon (–40 to +125°C) Plenum rated

DRAFT

RF Cabinet Earth Ground

The objective of this procedure is to install the RF Cabinet earth ground cabling.

Materials needed

Table 5-2 lists the quantity and description of the necessary materials.

Table 5-2: Materials Required for Earth Ground Cabling

Cable	Qty	Description
H	1	Ground cable, #3 BSWG (#2–AWG; 35 mm^2), insulated copper wire. Customer supplied cable.
Compression Lug 2909780203	1	Two hole lug to attach to the RF Cabinet end of the cable. (This part is supplied with the installation hardware).

Procedure

Follow the procedures in Table 5-3 to install the earth ground cable.

Table 5-3: Procedure to Install RF Cabinet Earth Ground Cables

Step	Action
1	Route the ground cable (H) into the I/O area of the RF Cabinet through the slot in the RF I/O area cover panel. Refer to Figure 5-4 for recommended location. **NOTE** – Ground cables should maintain a bend radius of 200 mm (8”) or larger. – This step is omitted if the ground wire is already in place and entering the cabinet through the concrete pad.
2	Strip insulation from the RF Cabinet end of the cable.
3	Attach the two hole ground lug supplied with the installation hardware to the stripped end of the cable. Use the proper crimp tool (CGDSTBM25S or equivalent).
4	Connect the two hole lug to the back of the RF Cabinet (see Figure 5-1 for location) and secure with the two M6 nuts and flat washers supplied with the installation hardware. Torque to 5 N–m (45 in–lbs.).

DRAFT

Figure 5-4: Antenna Panel Detail (Rear View)

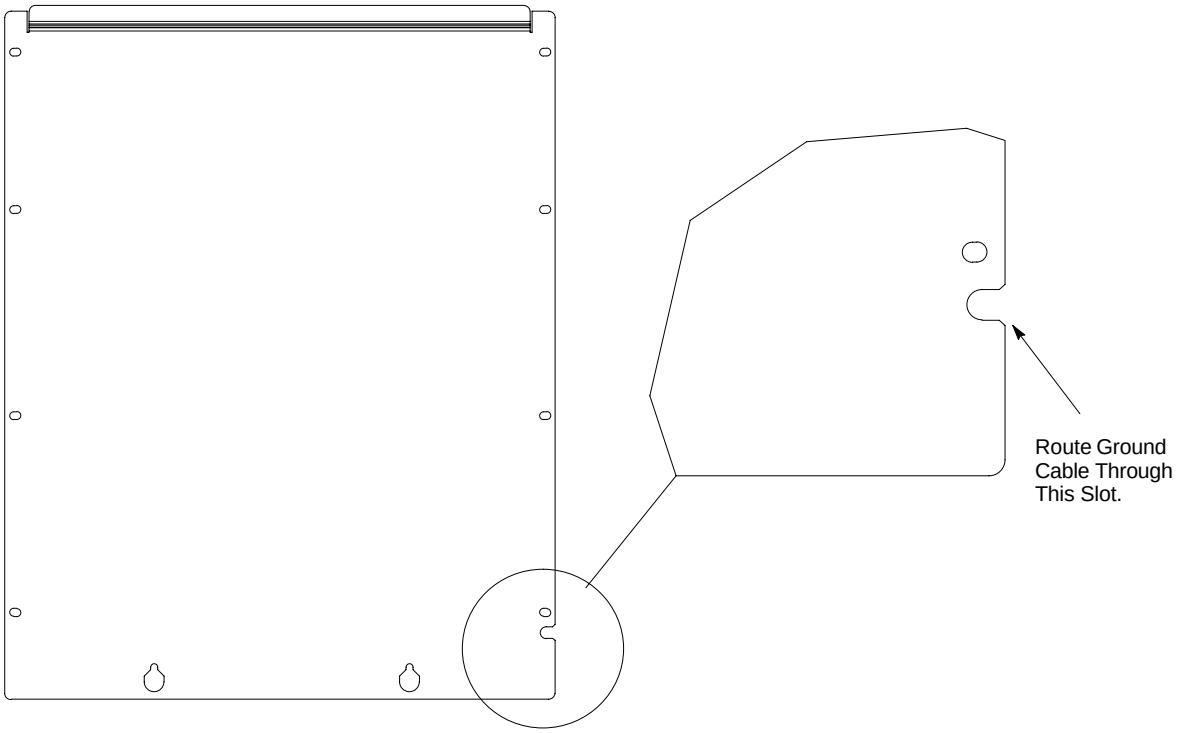

RF Cabinet Alarm, Span Line and Modem Cabling

The objective of this procedure is to install the RF Cabinet alarm ,span line and modem cabling.

WARNING

Use only 110 style punch block punch tool to terminate wires at punch block (ref: P/N CGDS237744 or equivalent).

Input and Output Cabling

Figure 5-5 details the location of the punch block, the input and output pin identification, wire pair identification, and how the wires are inserted for termination.

CAUTION

To ensure protection from surges, ground connection is required before connecting any incoming telecom lines.

DRAFT

Figure 5-5: 50 Pair Punch Block

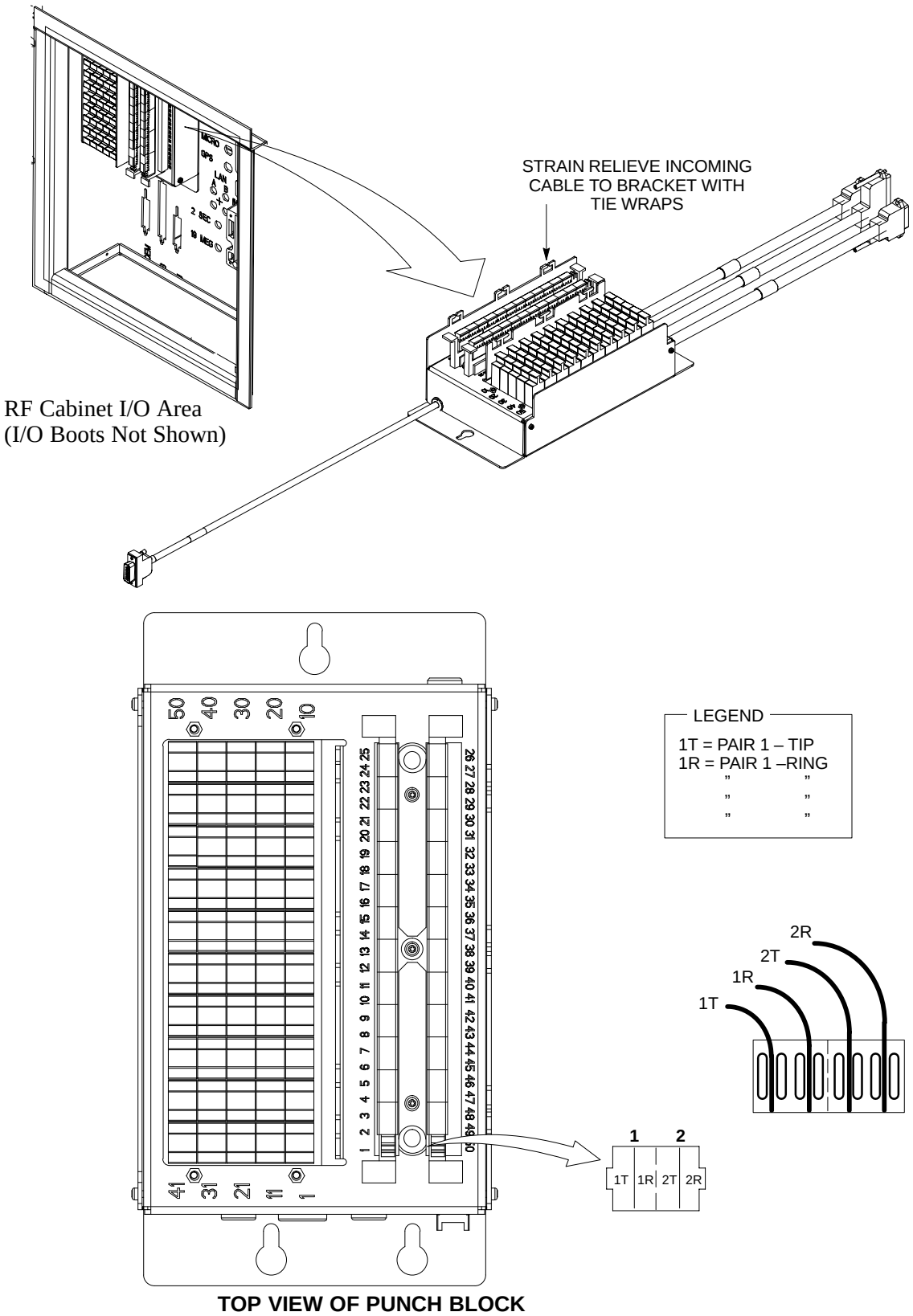

DRAFT

Materials needed

Table 5-4 lists the quantity and description of the necessary materials.

Table 5-4: Materials Required for Alarm, Span, and Modem Cabling

Cable	Qty	Description
A	1	**T1 Span Line and Modem Cable**, #22 or #24 AWG, 26-wire, shielded twisted 13 pair, 100-Ohm, solid wire. **E1 Span Line** requires 120–Ohm twisted pair lines.
NOTE The modem lines (2–wire, 1 pair) can be run on a separate cable from the Span Lines if more appropriate for the installation.		
B	1	Alarm (Customer I/O) Cable, #22 and #24 AWG, 32-wire, shielded twisted 16 pair, 100-Ohm, solid wire.

5

Procedure

Refer to Table 5-4 and Figure 5-6 and follow the procedures in Table 5-5 to install the Alarm, Span, and Modem Line cabling.

Table 5-5: Alarm, Span, and Modem Line Cable Install Procedure

Step	Action
1	Route the conduits for the twisted pair cables (A, B) to the I/O area of the RF Cabinet. Refer to Figure 5-1 and Figure 5-2 for recommended location. **NOTE** This step is omitted if the conduits are already in place in the concrete pad.
2	Route the twisted pair cable(s) (A, B) through the previously installed conduits and to the punch block through the rubber boot in the floor of the I/O area (See Figure 5-6). **NOTE** The rubber boot is sized to seal a cable with an outer diameter of either 1/4” or 1/2”, if a different sized cable is used heat/cold shrink or other means may be required to ensure a good seal. A tie wrap or hose clamp must be used to ensure a good seal around the cables at the boot.
3	Connect the Alarm, Span, and Modem Line pairs from the cable to the punch block (using only the recommended 110 style punch tool per the pin call–outs in Table 5-7.
4	Strain relief the cables (A, B) by tie wrapping it to the punch block mounting bracket as shown in Figure 5-5.

DRAFT

Figure 5-6: Rubber I/O Boot Detail

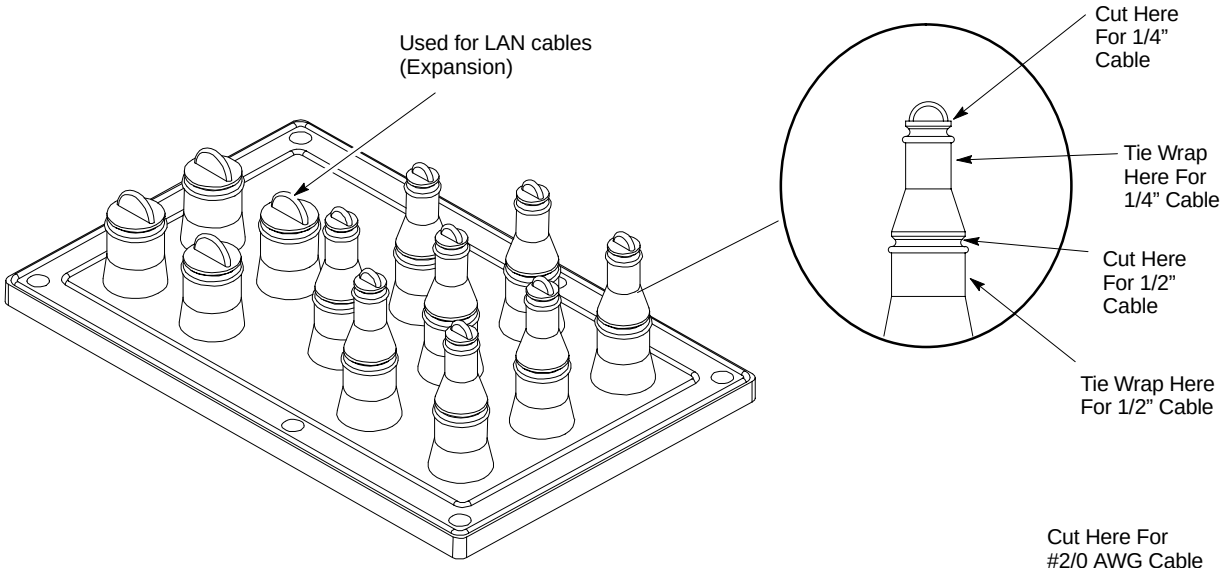

I/O Boot (RF Cabinet Only)

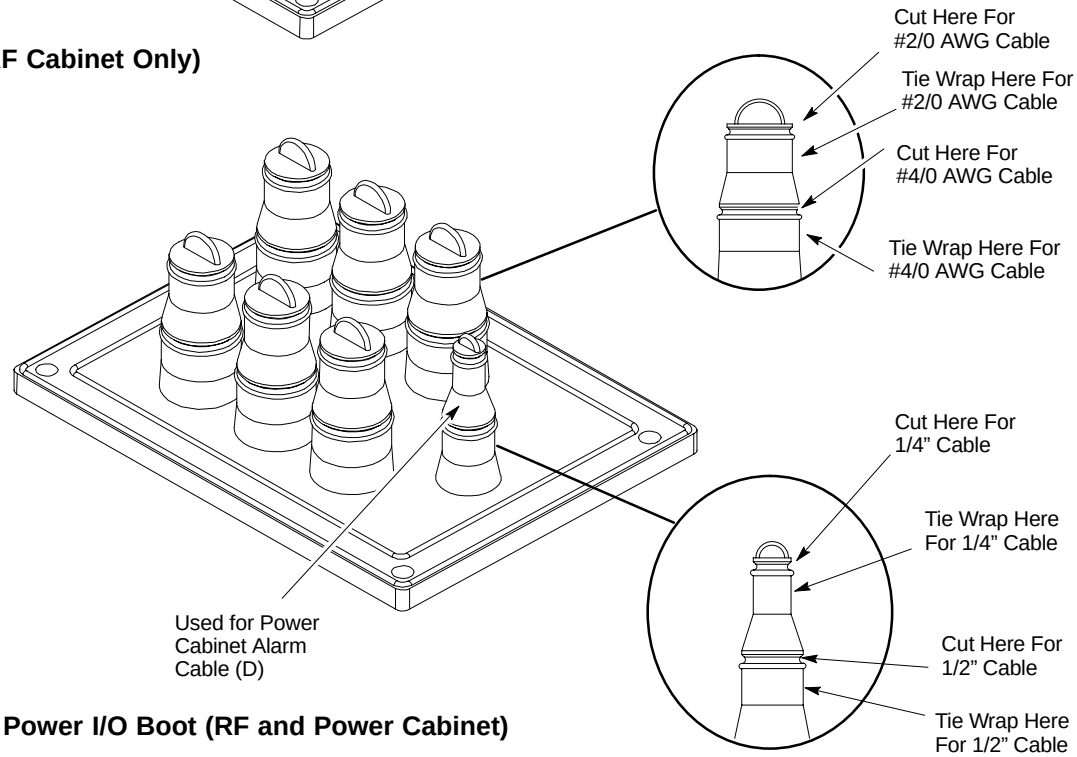

Power I/O Boot (RF and Power Cabinet)

DRAFT

Alarm Signal Specifications

Function

ALARM connections provide Customer Defined Alarm Inputs and Outputs. The customer can connect RF Cabinet site alarm input sensors and output devices to the RF Cabinet, thus providing alarm reporting of active sensors as well as controlling output devices.

Connections

Table 5-6 describes the characteristics and requirements for the inputs (each of which consists of a single 2–wire pair) and outputs (each of which consists of two 2–wire pairs; COM–NC and COM–NO).

Table 5-6: External Alarm Connector Characteristics and Requirements

Inputs	Outputs
To ensure proper operation, each wire pair to be used must be connected to an external transducer that provides a dry contact. – A closed contact including cable resistance must be 1K ohms or less. – An open contact including cable leakage must be 50K ohms or greater. Either of the above states can be defined by the customer in system software as an alarm condition.	The customer output device control inputs connect between the common (COM) and either the normally closed (NC) or normally open (NO) contacts of a relay. – Relay contacts are load rated for a maximum of 1A @ 30V DC and 1A @ 30V AC resistive. The toggling of the relay contacts to the opposite state is controlled by system software.

Alarm and Span Line Cable Pin/Signal Information

Table 5-7 lists the complete pin/signal identification for the 50–pin punch block.

DRAFT

Table 5-7: Pin–Out for 50 Pin Punch Block

Signal Name	Pin	Color		Signal Name	Pin	Color	
Power Cab Control – NC	1T	Blue	***P***	Customer Outputs 4 – NO	18R		
Power Cab Control – NO	1R	Blk/Blue	***O***	Customer Outputs 4–COM	19T		***I***
Power Cab Control – Com	2T	Yellow	***W***	Customer Outputs 4 – NC	19R		***N***
Reserved	2R	N/C	***E***	Customer Inputs 1	20T		***P***
Rectifier Fail	3T	Blk/Yello	***R***	Cust_Rtn_A_1	20R		***U***
AC Fail	3R	Green		Customer Inputs 2	21T		***T***
Power Cab Exchanger Fail	4T	Blk/Grn	***C***	Cust_Rtn_A_2	21R		***/***
Power Cab Door Alarm	4R	White	***A***	Customer Inputs 3	22T		***O***
Power Cab Major Alarm	5T	Blk/Whit	***B***	Cust_Rtn_A_3	22R		***U***
Battery Over Temp	5R	Red	***I***	Customer Inputs 4	23T		***T***
Power Cab Minor Alarm	6T	Blk/Red	***N***	Cust_Rtn_A_4	23R		***P***
Reticifier Over Temp	6R	Brown	***E***	Customer Inputs 5	24T		***U***
Power Cab Alarm Rtn	7T	Blk/Brn	***T***	Cust_Rtn_A_5	24R		***T***
LFR_HSO_GND	7R		***L***	Customer Inputs 6	25T		
EXT_1PPS_POS	8T		***F***	Cust_Rtn_A_6	25R		
EXT_1PPS_NEG	8R		***R***	Customer Inputs 7	26T		
CAL_+	9T		***/***	Cust_Rtn_A_7	26R		
CAB_–	9R		***H***	Customer Inputs 8	27T		
LORAN_+	10T		***S***	Cust_Rtn_A_8	27R		
LORAN_–	10R		***O***	Customer Inputs 9	28T		
Pilot Beacon Alarm – Minor	11T		***B***	Cust_Rtn_A_9	28R		
Pilot Beacon Alarm – Rtn	11R		***E***	Customer Inputs 10	29T		
Pilot Beacon Alarm – Major	12T		***A***	Cust_Rtn_A_10	29R		
Pilot Beacon Control – NO	12R		***C***	RVC_TIP_A	30T		
Pilot Beacon Control–COM	13T		***O***	RVC_RING_A	30R		***S***
Pilot Beacon Control – NC	13R		***N***	XMIT_TIP_A	31T		***P***
Customer Outputs 1 – NO	14T		***C***	XMIT_RING_A	31R		***A***
Customer Outputs 1 – COM	14R		***U***	RVC_TIP_B	32T		***N***
Customer Outputs 1 – NC	15T		***S***	RVC_RING_B	32R		
Customer Outputs 2 – NO	15R		***T***	XMIT_TIP_B	33T		
Customer Outputs 2 – COM	16T		***O***	XMIT_RING_B	33R		
Customer Outputs 2 – NC	16R		***M***	RVC_TIP_C	34T		
Customer Outputs 3 – NO	17T		***E***	RVC_RING_C	34R		
Customer Outputs 3 – COM	17R		***R***	XMIT_TIP_C	35T		
Customer Outputs 3 – NC	18T						

DRAFT

Pin–Out for 50 Pin Punch Block (Continued)							
XMIT_RING_C	35R			GPS_POWER_1+	42T	Blue	
RVC_TIP_D	36T		***S***	GPS_POWER_1–	42R	Bk/Blue	***R***
RVC_RING_D	36R		***P***	GPS_POWER_2+	43T	Yellow	***G***
XMIT_TIP_D	37T		***A***	GPS_POWER_2–	43R	Bk/Yello	***P***
XMIT_RING_D	37R		***N***	GPS_RX+	44T	Green	***S***
RVC_TIP_E	38T			GPS_RX–	44R	Bk/Grn	
RVC_RING_E	38R			GPS_TX+	45T	White	
XMIT_TIP_E	39T			GPS_TX–	45R	Bk/White	
XMIT_RING_E	39R			Signal Ground (TDR+)	46T	Red	
RVC_TIP_F	40T			Master Frame (TDR–)	46R	Bk/Red	
RVC_RING_F	40R			GPS_lpps+	47T	Brown	
XMIT_TIP_F	41T			GPS_lpps–	47R	Bk/Brn	
XMIT_RING_F	41R			Telco_Modem_T	48T		
				Telco_Modem_R	48R		
				Chasis Ground	49T		
				Reserved	49R, 50T, 50R		

5

RGPS Cabling Introduction

The objective of this procedure is to install the RF Cabinet Remote Global Positioning System receiver (RGPS) antenna cabling.

The cable between the RF Cabinet and the RGPS head is 22 AWG 12–conductor wire configured as six twisted pairs. Power for the RGPS head is provided by the cabinet via the the 12–conductor cable.

NOTE

This procedure assumes that the RGPS receiver has been installed, and the cable routed to the BTS site. For instructions to install the RGPS receiver see Appendix A.

Materials needed

Table 5-8 lists the quantity and description of the necessary materials.

Table 5-8: Materials Required for RGPS Cabling

Cable	Qty	Description
C	T472AA	RGPS Cable and Antenna Package, 50 Ft. Cable*
	T472AB	RGPS Cable and Antenna Package, 125 Ft. Cable**
	T472AC	RGPS Cable and Antenna Package, 250 Ft. Cable**
	T472AD	RGPS Cable and Antenna Package, 500 Ft. Cable**
	T472AE	RGPS Cable and Antenna Package, 1000 Ft. Cable**
	T472AF	RGPS Cable and Antenna Package, 2000 Ft.*Cable*
	T472AG	RGPS Cable Only, 50 Ft. Cable*
	T472AH	RGPS Cable Only, 125 Ft. Cable**
	T472AJ	RGPS Cable Only, 250 Ft.Cable**
	T472AK	RGPS Cable Only, 500 Ft.Cable**
	T472AL	RGPS Cable Only, 1000 Ft.Cable**
	T472AM	RGPS Cable Only, 2000 Ft.Cable**
	T472AN	RGPS Antenna Only

* Cable – 12 conductor, shielded, twisted pair, 22 AWG, solid. Insulation – PVC (–40 to +60°C)
** Cable – 12 conductor, shielded, twisted pair, 22 AWG, solid. Insulation – FEP Teflon (–40 to +125°C) Plenum rated

DRAFT

Installation Procedure

Table 5-9 details the step–by–step procedure on installing the RGPS cabling.

Table 5-9: RGPS Cable Install Procedure

Step	Action
1	Route the twisted pair cable through the previously installed conduit to the RF Cabinet I/O area, and to the punch block through the rubber boot in the floor of the I/O area (See Figure 5-6). Refer to Figure 5-1 for the recommended locations. **NOTE** The rubber boot is sized to seal a cable with an outer diameter of either 1/4” or 1/2”, if a different sized cable is used heat/cold shrink or other means may be required to ensure a good seal. A tie wrap or hose clamp must be used to ensure a good seal around the cables at the boot.
2	Connect the RGPS pairs from the cable to the punch block (using only the recommended 110 style punch tool CGDS237744 or equivalent) per the pin call–outs in Table 5-10.
3	Strain relief the cable by tie wrapping it to the punch block mounting bracket as shown in Figure 5-5

NOTE

The RGPS cable is comprised of 6 twisted pairs of wires. For proper RGPS operation, each **BLACK** wire in this cable is unique and must be paired with it’s proper mate.

Punch Block for the Remote GPS (RGPS)

Table 5-10: Punch Block for the Remote GPS

Punch Block Pin Number	Signal Name	Wire Color
42T	GPS_POWER_1+	BLUE
42R	GPS_POWER_1–	BLACK/BLUE
43T	GPS_POWER_2+	YELLOW
43R	GPS_POWER_2–	BLACK/YELLOW
44T	GPS_RX+	WHITE
44R	GPS_RX–	BLACK/WHITE
45T	GPS_TX+	GREEN
45R	GPS_TX–	BLACK/GREEN
46T	TDR+	RED
46R	TDR–	BLACK/RED
47T	GPS_1pps+	BROWN
47R	GPS_1pps–	BLACK/BROWN

DRAFT

RF GPS Cabling (if applicable)

The objective of this procedure is to install the RF GPS antenna cabling.

Materials Needed

Table 5-11 lists the quantity and description of the necessary materials.

Table 5-11: Materials Required for RF GPS Cabling

Cable	Part Number	Description
J	Supplied in Kit STAN4000A	RF GPS Cable, 1/2 inch coaxial, length=50 ft. Two male N–type connectors, one end loose (to be field terminated after routing of cable through I/O boot). If lengths greater than 50 ft. are required, cable style and length should be determined by site configurations. Maximum loss <4.5 dB @ 1575 MHz for all cabling and connections between the GPS antenna and the RF Cabinet. **NOTE** A 1/2 inch cable “pigtail” should always be used to exit the cabinet before transitioning to a larger cable. This will ensure a proper seal at the rubber I/O boot. It is suggested that the supplier cable be cut to the desired length to achieve this.

RF GPS Cabling Procedure

Follow the procedures in Table 5-12 to install the RF GPS cabling.

Table 5-12: RF GPS Cable Install Procedure

Step	Action
1	Route the conduit (if applicable) for the cable (J) to the I/O area of the RF Cabinet. Refer to Figure 5-1 for recommended location. **NOTE** This step is omitted if the conduits is already in place in the concrete pad.
2	Route loose end of cable (J) from RFGPS Antenna through the previously installed conduit (if applicable) and through the rubber boot in the floor of the I/O area (See Figure 5-6). **NOTE** The rubber boot is sized to seal a cable with an outer diameter of either 1/4” or 1/2”, if a different sized cable is used heat/cold shrink or other means may be required to ensure a good seal. A tie wrap or hose clamp must be used to ensure a good seal around the cables at the boot.
3	Terminate the loose male N–type connector to the loose end of the cable, and connect to RFGPS N connector (see Figure 5-1).

DRAFT

LFR Cabling (if applicable)

The objective of this procedure is to install the LFR antenna cabling.

Materials Needed

Table 5-13 lists the quantity and description of the accessary materials for cabling the LFR.

Table 5-13: Materials Required for LFR Cabling

Cable	Qty	Part Number	Description
K	1	CGDS315SA038	Cable, 100 Ohm, #24 AWG, shielded twisted pair, 91.5 m (300 ft.) One 9–pin subminiature D connector and one 5–pin circular connector.
	1		Wire Cutters

LFR Cabling Procedure

Table 5-14 details the step–by–step procedure on installing the LFR cabling.

Table 5-14: LFR Cable Install Procedure

Step	Action
1	Using the wire cutters, cut off the 5–pin circular connector.
2	Connect the 9 pin D connector to the LFR antenna, route the twisted pair cable through the previously installed conduit from the LFR antenna to the RF Cabinet I/O area, and to the punch block through the rubber boot in the floor of the I/O area (See Figure 5-6). Refer to Figure 5-1 for the recommended locations. **NOTE** The rubber boot is sized to seal a cable with an outer diameter of either 1/4” or 1/2”, if a different sized cable is used heat/cold shrink or other means may be required to ensure a good seal. A tie wrap or hose clamp must be used to ensure a good seal around the cables at the boot.
3	Connect the LFR pairs from the cable to the punch block (using only the recommended 110 style punch tool CGDS237744 or equivalent) per the pin call–outs in Table 5-15. Strain relief the cable by tie wrapping it to the punch block mounting bracket as shown in Figure 5-5

LFR Cable Pin/Signal Information

Table 5-15 presents the pin/signal information for the LFR cable. This information applies to the standard LFR cable.

Table 5-15: Pin/Signal Information for LFR Cable

5 Pin Cicular Connector Pin	Punchblock Pin Number	Description	Wire Color
D	10T	Antenna+ (Power and Signal)	Red
E	10R	Antenna– (Power and Signal)	Black (Paired with Red)

. . . continued on next page

DRAFT

Table 5-15: Pin/Signal Information for LFR Cable			
5 Pin Cicular Connector Pin	**Punchblock Pin Number**	**Description**	**Wire Color**
A	9T	Calibrator+	White
B	9R	Calibrator–	Black (Paired with White)
C	7R	Drain From Shield	Bare

RF Cabling Introduction

This section supports the RF cabling for the following configurations:

Table 5-16: BTS Sector/Carrier Configurations	
Number of Sectors	**Number of Carriers**
3 / 6	1
3 / 6	2
3	3
3	4

BTS Configurations

The antenna connections for a three (3) duplexed 120° sector configuration are:

Table 5-17: Antenna Cables for Duplexed 120 Degree Sector	
Antenna #	**RX/TX**
1A	RX1A/TX1A (Main)
2A	RX2A/TX2A (Main)
3A	RX3A/TX3A (Main)
1B	RX1B/TX1B (Diversity)
2B	RX2B/TX2B (Diversity)
3B	RX3B/TX3B (Diversity)

DRAFT

The antenna connections for a six (6) Duplexed 60° sector configuration are:

Table 5-18: Antenna Cables for Duplexed 60 Degree Sector

Antenna #	RX/TX
1A	RX1A/TX1A (Main)
2A	RX2A/TX2A (Main)
3A	RX3A/TX3A (Main)
1B	RX1B/TX1B (Diversity)
2B	RX2B/TX2B (Diversity)
3B	RX3B/TX3B (Diversity)
4A	RX4A/TX4A (Main)
5A	RX5A/TX5A (Main)
6A	RX6A/TX6A (Main)
4B	RX4B/TX4B (Diversity)
5B	RX5B/TX5B (Diversity)
6B	RX6B/TX6B (Diversity)

The antenna connections for a three (3) Non–Duplexed 120 degree sector configuration are shown in Table 5-19.

Table 5-19: Antenna Cables for Non–Duplexed 120 Degree Sector

Antenna #		RX/TX
RX	1A	RX1A (Main)
	2A	RX2A (Main)
	3A	RX3A (Main)
	1B	RX1B (Diversity)
	2B	RX2B (Diversity)
	3B	RX3B (Diversity)
TX	1A	TX1A (Main)
	2A	TX2A (Main)
	3A	TX3A (Main)
	1B	TXIB
	2B	TX2B
	3B	TX3B

DRAFT

The antenna connections for a three (3) Non–Duplexed 120 degree sector configuration are shown in Table 5-19.

Table 5-20: Antenna Cables for Non–Duplexed 60 Degree Sector

Antenna #		**RX/TX**
RX	1A	RX1A (Main)
	2A	RX2A (Main)
	3A	RX3A (Main)
	4A	RX4A (Main)
	5A	RX5A (Main)
	6A	RX6A (Main)
	1B	RX1B (Diversity)
	2B	RX2B (Diversity)
	3B	RX3B (Diversity)
	4B	RX4B (Diversity)
	5B	RX5B (Diversity)
	6B	RX6B (Diversity)
T**X**	1A	TX1A (Main)
	2A	TX2A (Main)
	3A	TX3A (Main)
	4A	TX4A (Main)
	5A	TX5A (Main)
	6A	TX6A (Main)
	1B	TX1B
	2B	TX2B
	3B	TX3B
	4B	TX4B
	5B	TX5B
	6B	TX6B

5

RF Main and RF Path Cabling

This procedure is used to install the RF Cabinet Main RF path cabling.

NOTE

The Main antenna connections are N–Female type.

DRAFT

Cable Labels

The cable designations in Table 5-21 and Table 5-22 are referenced to Figure 5-7.

Figure 5-7: SC 4812ET RF Cabinet

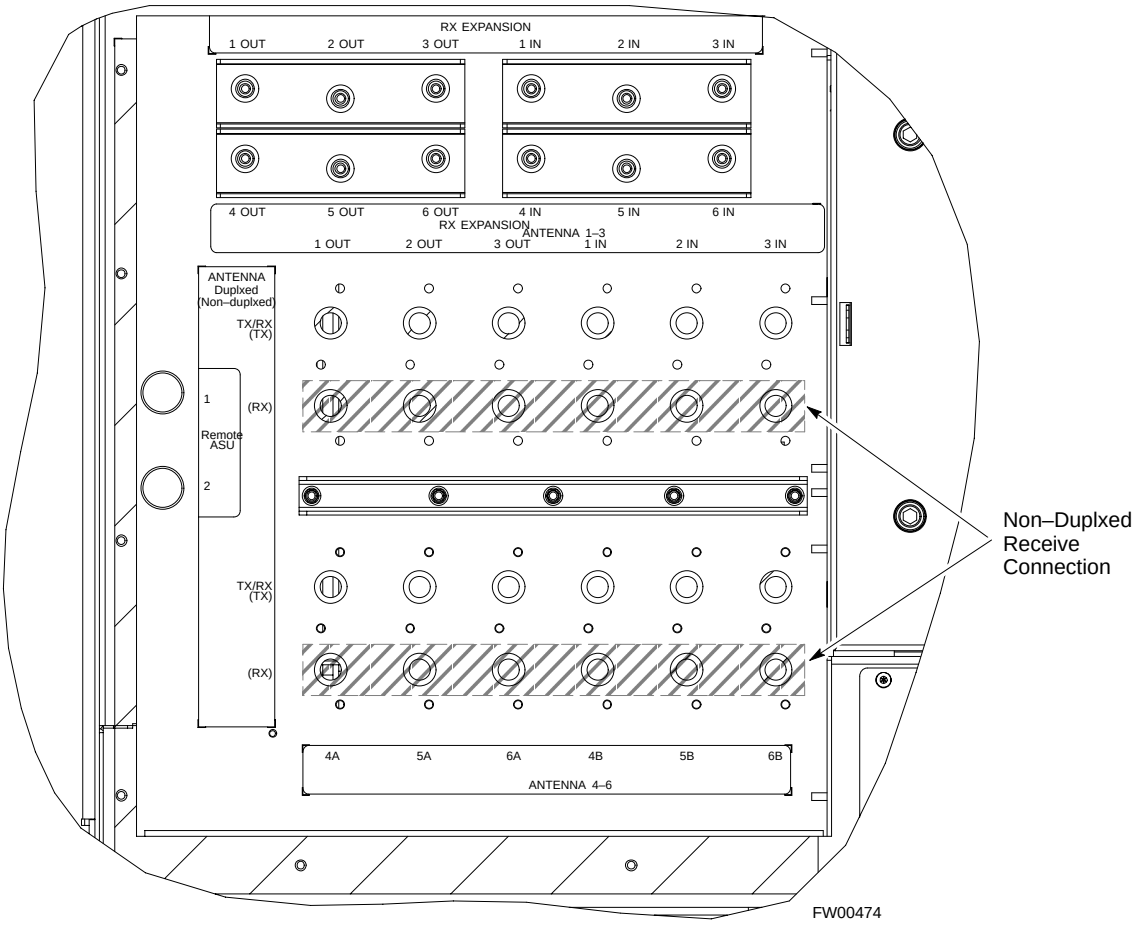

Procedure for Rear Installation

Refer to Figure 5-7 and follow the procedures in Table 5-21 to install the Main RF antenna cables through the rear wall of the RF Cabinet.

Table 5-21: Procedure to Install the Main RF Cabling through the Rear Wall of the RF Cabinet

Step	Action
1	Remove the panel that covers the RF I/O area (see Figure 5-7).
2	Connect the Main RF antenna cables (I) to the bulkhead connectors on the rear wall of the RF Cabinet, making sure to connect the correct antenna cable to the correct DRDC or TRDC (see Table 5-17 for a three (3) sector configuration and see Table 5-18 for a six (6) sector configuration). **NOTE** Antenna RF Cables should be strain relieved, RF I/O area cover panel is NOT replaced.

DRAFT

NOTE

All antenna RF cabling should be protected with ice bridge.

Procedure for Bottom Installation

Refer to Figure 5-7 and follow the procedures in Table 5-22 to install the Main RF antenna cable through the bottom of the RF Cabinet.

Table 5-22: Procedure to Install the Main RF Cabling through the Bottom of the RF Cabinet

Step	Action
1	Remove the panel that covers the RF I/O area (see Figure 5-7).
2	Route the Main RF antenna (I) cables through the bottom of the RF Cabinet. **NOTE** If conduit is not used, cables must be strain relieved.
3	Connect the Main RF antenna cables (I) to the bulkhead connectors on the rear wall of the RF Cabinet, making sure to connect the correct antenna cable to the correct DRDC or TRDC (see Table 5-17 for a three (3) sector configuration and see Table 5-18 for a six (6) sector configuration).
4	Replace the RF I/O area cover panel if desired.

NOTE

The bend radius of the RF cables is restricted when installed through the bottom of the cabinet.

DRAFT

Power Cabinet Earth Ground

The objective of this procedure is to install the Power Cabinet earth ground cabling.

Materials needed

Table 5-23 lists the quantity and description of the necessary materials.

Table 5-23: Materials Required for Earth Ground Cabling

Cable	Qty	Description
H	1	Ground cable, #3 BSWG (#2–AWG; 35 mm^2), insulated copper wire. Customer supplied cable.
Compression Lug 2909780203	1	Two hole lug to attach to the Power Cabinet end of the cable. (This part is supplied with the installation hardware).

Procedure

Follow the procedures in Table 5-24 to install the earth ground cable.

Table 5-24: Procedure to Install Earth Ground Cables

Step	Action
1	Route the ground cable (H) into the I/O area of the Power Cabinet through the slot in the right cover panel. Refer to Figure 5-8 for recommended location. **NOTE** Ground cables should maintain a bend radius of 200 mm (8”) or larger. **NOTE** This step is omitted if the ground wire is already in place and entering the cabinet through the concrete pad.
2	Strip insulation from the Power Cabinet end of the cable.
3	Attach the two hole ground lug supplied with the installation hardware to the stripped end of the cable. Use the proper crimp tool (CGDSTBM25S or equivalent).
4	Connect the two hole lug to the back of the Power Cabinet (see Figure 5-1 for location) and secure with the two M6 nuts supplied with the installation hardware. Torque to 5 N–m (45 in–lbs.).

DRAFT

Figure 5-8: AC I/O Plate

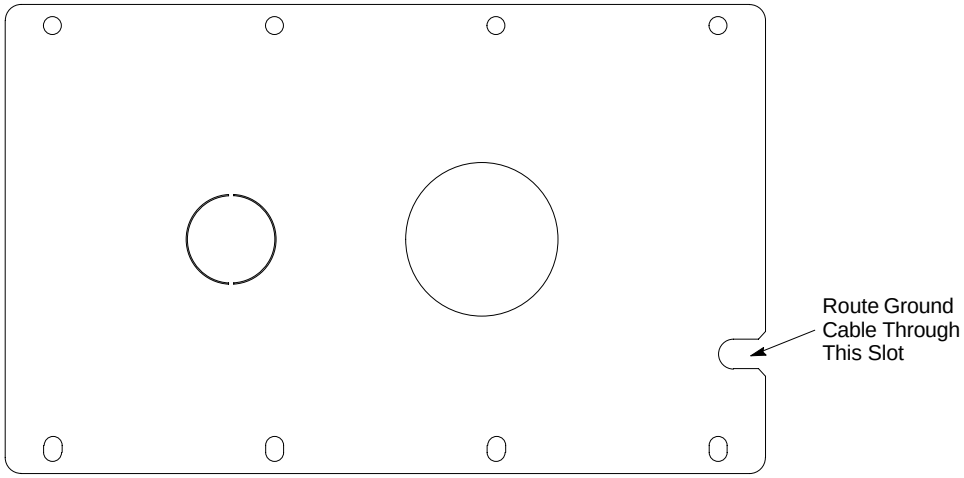

Power Cabinet Alarm Cable

The objective of this procedure is to install the Power Cabinet alarm cabling. This cable runs from the Power Cabinet to the RF Cabinet. It can be run in the 3” DC Conduit.

Power Cabinet Punch Block

Figure 5-9 details the location of the punch block, the input and output pin identification, wire pair identification, and how the wires are inserted for termination.

CAUTION

To ensure protection from surges, ground connection is required before connecting any incoming lines.

WARNING

Use only 110 style punch block punch tool to terminate wires at punch block (ref: P/N CGDS237744 or equivalent).

DRAFT

Figure 5-9: Power Cabinet Punch Block

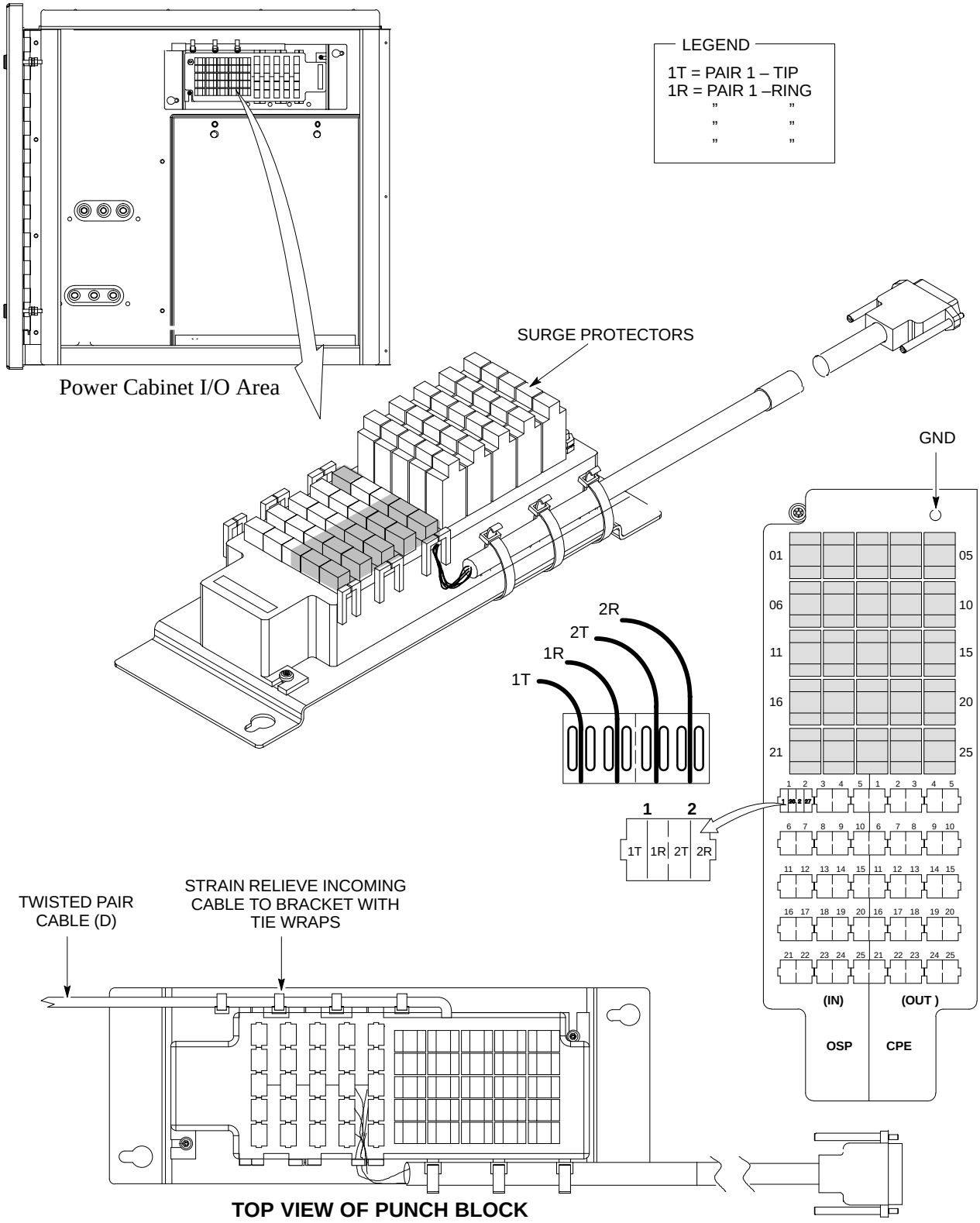

DRAFT

Materials needed

Table 5-25 lists the quantity and description of the necessary materials.

Table 5-25: Materials Required for Power Cabinet Alarm Cabling

Cable	Qty	Description
D 3086039H17	1	Power Cabinet Alarm/Control Cable (length=12ft.), 12–wire, shielded twisted 6 pair, solid wire. **NOTE** If the 12 ft. cable is does not meet site requirements a longer cable can be ordered using part number **3086039H16**.

Power Cabinet Alarm Cabling Procedures

Refer to Figure 5-9 and Figure 5-10, and follow the procedures in Table 5-26 to install the Power Cabinet Alarm cabling.

Table 5-26: Power Cabinet Alarm Cable Install Procedure

Step	Action
1	Route the conduit for the twisted pair cable (D) from the I/O area of the Power Cabinet to the I/O area of the RF Cabinet. **NOTE** This cable should share the same conduit used for the DC Power Cabling 3” trade size conduit is recommended for the DC cables shipped with the Power Cabinet. Refer to Figure 5-4 for recommended location. **NOTE** This step is omitted if the conduit is already in place in the concrete pad.
2	Route the twisted pair cable (D) through the previously installed conduits and to the punch block through the rubber boot in the floor of each I/O area (See Figure 5-6). **NOTE** The rubber boot is sized to seal a cable with an outer diameter of either 1/4” or 1/2”, if a different sized cable is used heat/cold shrink or other means may be required to ensure a good seal. A tie wrap or hose clamp must be used to ensure a good seal around the cables at the boot.
3	Connect the pairs from the cable to the punch blocks in both the RF and Power Cabinet (using only the recommended 110 style punch tool CGDS237744 or equivalent).
4	Strain relief the cable (D) by tie wrapping it to the punch block mounting bracket as shown in Figure 5-9 (Power Cabinet) and Figure 5-5 (RF Cabinet).

DRAFT

Power Cabinet Alarm Cable Pin/signal Information

See Table 5-27 for complete pin/signal information.

Table 5-27: Pin–Out for Power Cabinet Punch Block

RF Cabinet Punch Block Pin Location	Signal	Wire Color	Power Cabinet Punch Block Pin Location
1T	Control (NO)	Blue	1T
1R	Control (NC)	Blk/Blue	1R
2T	Control (Com)	Yellow	2T
3T	Rectifier Fail	Blk/Yellow	3T
3R	AC Fail	Green	4T
4T	Exchanger Fail	Blk/Green	5T
4R	Door Alarm	White	6T
5T	Major Alarm	Blk/White	7T
5R	Battery Overtemp	Red	8T
6T	Minor Alarm	Blk/Red	9T
6R	Rectifier Overtemp	Brown	10T
7T	Alarm Return	Blk/Brown	11R

DC Power Interconnect to RF Cabinet

The objective of this procedure is to connect the DC power cabling to the RF Cabinet from the Power Cabinet.

WARNING

ALL power must be removed from the system until all connections are made to both the RF and Power Cabinet.

Ensure that all breakers in both the RF and Power Cabinet are turned in the "**OFF**" (opened) position.

Tools and equipment required

The following tools are required to install the power cables:

- Thomas & Betts TBM14 Hydraulic crimping tool with color keyed crimp die set (or equivalent). Contact Thomas & Betts for information concerning equivalent tools.
- 17 mm socket
- Torque wrench capable of 110 in–lbs

DRAFT

Table 5-28: Wire, Lug, and Die Table					
Motorola Part Number for Lugs	**Wire Size**				**Color and Die Code**
	AWG	**Metric (mm)**	**Welding (Superflex)**	**Circular Mills Area**	
CGDS256306951514	2/0 AWG	60–70	1/0	133,400	BLACK 45
CGDS256306951539	3/0 AWG	85–95	2/0	167,800	ORANGE 50
CGDS256306951515	4/0 AWG	100–107	3/0	211,600	PURPLE 54
CGDS256306951540	N/A	N/A	4/0	250,000	YELLOW 62

Power Input Connections

Figure 5-10 shows how the power cable is connected to the RF and Power Cabinet. Figure 5-1 (on page 85) shows the location of the DC power connector in the RF Cabinet and Power Cabinet.

Figure 5-10: Connecting Power Cables

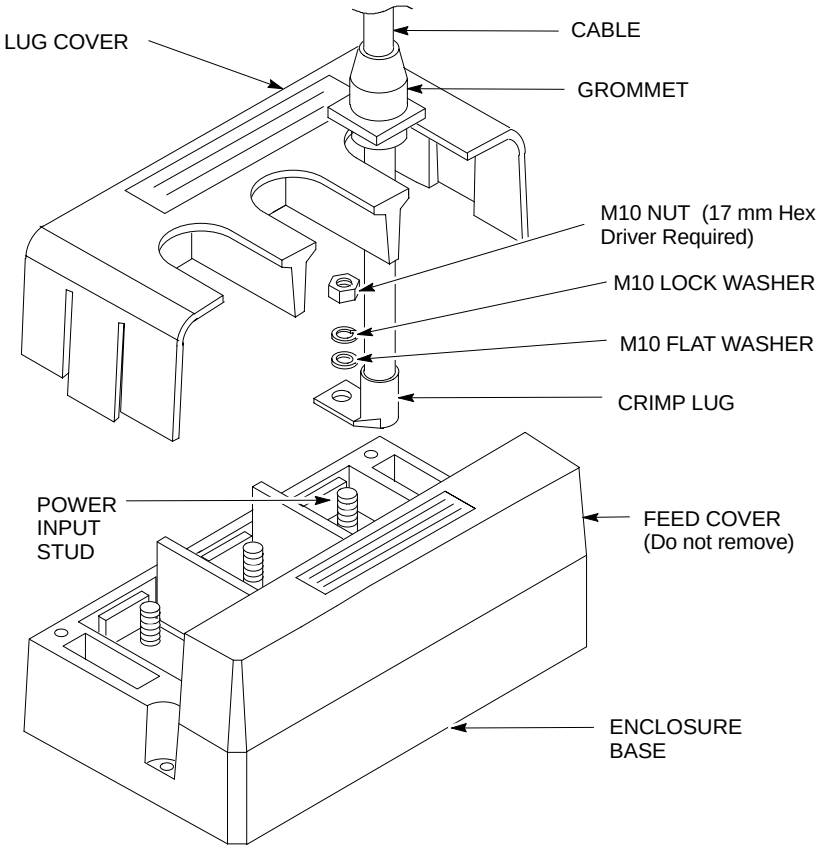

CAUTION

Route the cables through the rubber boot **BEFORE** crimping lug onto wire or damage to the boot can occur.

DRAFT

Procedure

WARNING

Do NOT wear a wrist strap when servicing the power supplies or power distribution cabling. Serious personal injury can result.

CAUTION

Before starting the procedure, ensure that the Power Cabinet main DC breakers are turned ”OFF”.

Follow the procedure in Table 5-29 to install the DC power cables (refer to Figure 5-10 and Figure 5-1).

Table 5-29: Procedure to Install DC Power Cables

Step	Action
1	Ensure that all three (3) main DC breakers in the Power Cabinet are “OFF.”
2	Route the DC conduit from the I/O area of the Power Cabinet to the I/O area of the RF Cabinet. See Figure 5-1 for suggested location. **NOTE** This step is omitted if the DC conduit is already installed through the concrete pad.
3	Route the three (3) RED +27V feed power cables through the conduit and to the DC power connector in each cabinet through the rubber boot (see Figure 5-6) in the floor of the I/O area. **NOTE** The rubber boot is sized to seal either a #2/0 AWG or #4/0 AWG power cable, if a different sized cable is used other means may be required to ensure a good seal. A tie wrap or hose clamp must be used to ensure a good seal around the cables at the boot.
4	Route the three (3) BLACK –27V feed power cables through the conduit and to the DC power connector in each cabinet through the rubber boot (see Figure 5-6) in the floor of the I/O area. **NOTE** The rubber boot is sized to seal either a #2/0 AWG or #4/0 AWG power cable, if a different sized cable is used other means may be required to ensure a good seal. A tie wrap or hose clamp must be used to ensure a good seal around the cables at the boot.
5	At the RF Cabinet end of each DC power cable, strip insulation equal to the length of the crimping lug barrel, plus an additional 5 mm (0.2”). **! CAUTION** Route the cables through the rubber boot **BEFORE** crimping lug onto wire or damage to the boot can occur.
6	Trim the top (tapered end) of the cable grommet to allow the grommet to slide over the cable. Ensure that the grommet fits firmly around the cable.

. . . continued on next page

DRAFT

Table 5-29: Procedure to Install DC Power Cables	
Step	**Action**
7	Slide one cable grommet over each cable at the connector box.
8	Insert the cable into the barrel of the right angle crimp lug.
9	Crimp the lug to the cable.
10	Repeat steps 8–9 for the remaining power cable(s).
	NOTE Be sure to observe the polarity of each cable as you install the cables to the power input studs on the RF Cabinet.
11	Assemble the power cable to the studs as follows:
11a	– Place the cable lugs over the power input studs.
11b	– Place the M10 flat washer over the stud and on top of the lug.
11c	– Place the M10 lock washer over the stud and on top of the flat washer.
11d	– Place the M10 nut over the stud and on top of the washer.
	! CAUTION Exceeding the torque limit may damage the stud.
11e	– Torque (tighten) nuts to 11–12 N–m (100–110 in–lbs).
12	Repeat steps 11a through 11e for the remaining power cables.
13	Position the lug cover over the base and lock the cover (it will snap) onto the enclosure base.
14	Slide each grommet down the cable and over the cable entry hole.
15	Repeat step 5 through step 14 for the Power Cabinet connections.
16	Verify that DC polarity between the RF and Power Cabinet is correct.

AC Power Cabling

The objective of this procedure is to connect the 208–240 VAC power cables to the Power Cabinet's AC load center/breaker panel. Figure 5-11 shows where the AC wires are connected inside the ACLC.

DRAFT

CAUTION

- Dangerous voltages are present that can cause serious injury or death. AC power wiring must be installed by qualified personnel only.
- High Leakage current. Earth ground connection is essential before connecting the power supply. Ground connection is also required before connecting any incoming telecom lines to ensure protection from surges.

IMPORTANT

The Power Cabinet is rated at 130 Amps (100 Amps continuous / 130 Amps non–continuous, in the range of 208–240V AC see Table 5-32 for details). Maximum cable size that can be accommodated is 300 kcmil. Cabling sizing should be determined by Local Electrical Codes, using 90°C rated conductors, and derating for 50°C operation. Motorola recommends not less than 2/0 AWG (#1 BSWG; 50 mm^2) copper for buried/raceway cables to the power pedestal, with an associated power pedestal breaker size of 150 Amps for one Power Cabinet.

The AC power pedestal or meter should be provided with a breaker to protect the cable from the pedestal to the Power Cabinet. The Power Cabinet rating is 130A. A 150 A breaker is recommended, or as appropriate for local electrical code.

NOTE

The hole in the cabinet I/O panel is the proper size for a 2” Trade size conduit fitting.

AC Load Center

The AC Load Center (ACLC) is divided into two (2) compartments. The circuit breaker compartment is accessible through the front of the Power Cabinet and contains all of the AC circuit breakers. The rear compartment is accessible through the I/O area of the Power Cabinet and contains all the connections for the AC Power Cabling to the Power Cabinet.

Cable Labels

The cable designations are referenced to Table 5-1.

Equipment Needed

Table 5-30 provides the quantity and description of the necessary equipment required for AC Power.

DRAFT

Table 5-30: Equipment Required for AC Power	
Item	**Description**
G	Power cable – Maximum: 300 kcmil. **NOTE** – This maximum is defined by the size wire that the AC Load Center will accept. – Conduit: Moisture tight type. – The hole in the cabinet I/O panel is the proper size for a 2” Trade Size conduit.

WARNING

– Do NOT wear a wrist strap when servicing the power supplies or power distribution cabling. Serious personal injury may result.

– Power must be turned OFF at the power meter breaker box. Serious personal injury may result.

CAUTION

For North American models the SC 4812ET Power Cabinet can only be connected to a split phase 240/120 V 3–wire plus ground supply, or 208 V 3–wire plus ground supply. The voltage between either L1 and L2 to neutral and ground CANNOT exceed 120 V. Connection of the “wild” or “hot” leg (>200 V relative to neutral/ground) of a delta supply will damage the SC 4812ET Power Cabinet. Check that the voltage between either L1 and L2 to neutral and ground does not exceed 120 V, before connecting to the system.

5

Procedure

Use Table 5-31 to install the power cables.

Table 5-31: Procedure to Install Power Cables	
Step	**Action**
1	Ensure the breaker box at the power meter is OFF.
2	Open Power Cabinet lower rear I/O door.
3	Open AC Load Center access panel.
4	Route the AC power conduit either through the rear panel of the cabinet or through the base of the cabinet to the ACLC.
5	Route the 208–240 volt AC power wires from the power meter breaker box, through the AC power conduit, through the rubber boot (See Figure 5-6), and to the AC load center (refer to Figure 5-6).
6	Electrical connections must conform to local electrical construction standards.

DRAFT

WARNING

Ground MUST be connected first. Electric shock hazard exists if any other sequence is used.

Figure 5-11: International and North American AC Load Center Wiring

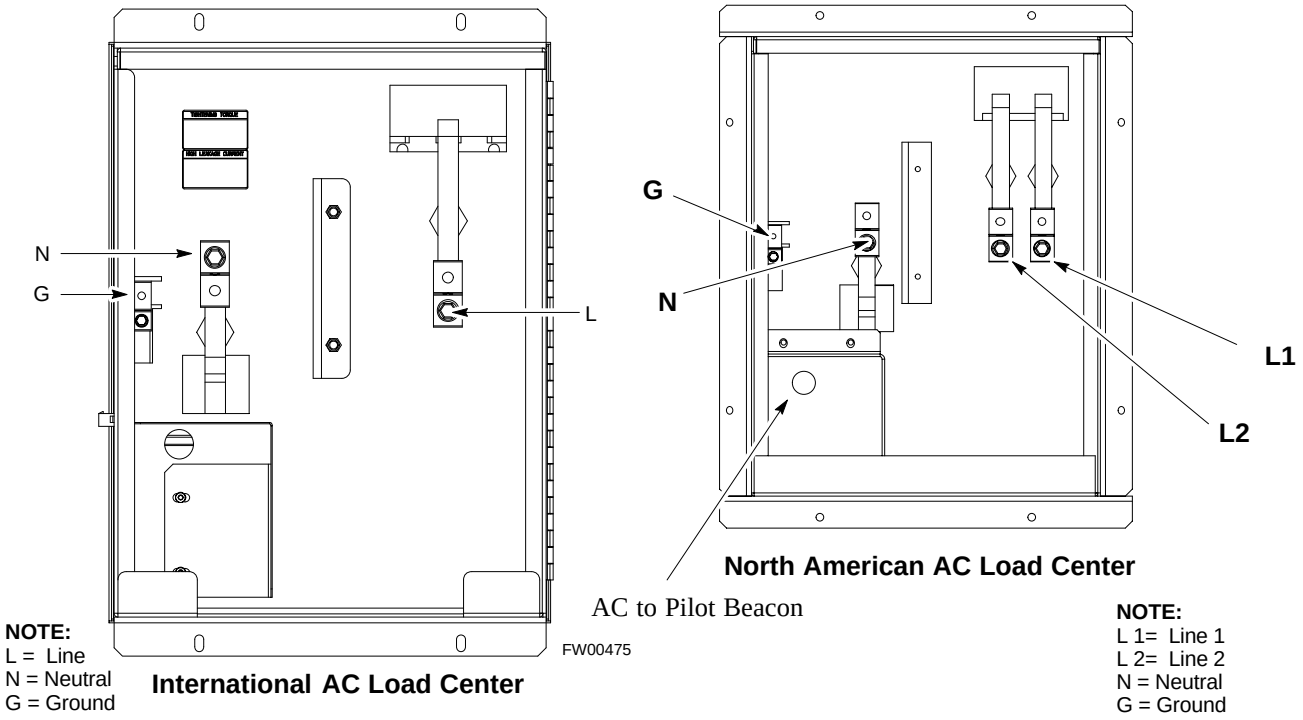

5

Power Cabinet AC Current Requirements

Table 5-32 lists the number of sector–carrier AC current ratings for the Power Cabinet.

Table 5-32: Power Cabinet AC Current Requirements

Number of Sector–Carriers[1]	Number of Rectifiers	Power Cabinet AC Current Ratings[2]
3	3	60A (90A Non–Continuous)
6	4	71A (101A Non–Continuous)
9	5	86A (116A Non–Continuous)

DRAFT

Table 5-32: Power Cabinet AC Current Requirements		
Number of Sector–Carriers[1]	**Number of Rectifiers**	**Power Cabinet AC Current Ratings[2]**
12	6	100A (130A Non–Continuous)

[1] To obtain this number multiply the number of sectors by the number of carriers (i.e., 6 sector, 2 carrier = 12 sector–carrier).

[2] 30A Non–continuous is for the GFCI outlets and the 15A Spare Breaker in the Power Cabinet

Heat Dissipation

IMPORTANT

The minimum heat dissipated to prevent condensation inside the cabinet under the extremes of environmental conditions is 110 Watts for the RF Cabinet and 110 Watts for the Power Cabinet. This can be accomplished by following the Initial Power Up procedures in the SC 4812ET ATP manual.

DRAFT

Notes

DRAFT

Chapter 6: What's Next and Cleanup

This section includes...

Introduction 119
Cleanup the Site 119
Fill out Checklist 120
Optimize the System 122

Tables

Table 6-1: Installation Completion Checklist 120

Introduction

Before Optimization/ATP performed, complete the following procedures:

- Clean up the site.
- Fill out the installation completion checklist.

Cleanup the Site

It is important that all shipping and installation materials to be discarded be removed from the customer site. Return all tools to their proper place and conduct a final inspection.

Remove Protective Covering

Remove any antistatic plastic or cloth sheeting that was used to cover the equipment.

Pickup tools and leftover materials and debris

- Place all hand and power tools in the installation tool kit or other appropriate place. Note any tools that need replacement, cleaning, or adjustment.
- Place any leftover materials in a location specified by the site manager.
- Remove any packing material.
- Ensure that all scrap materials have been removed from the site.

Environment

- Check that the power connections are tight.

. . . continued on next page

DRAFT

– Check that all FRU modules and doors are closed and latched.
– Organize any items (manuals, materials, etc.) left on site and place them in a location specified by the site manager.

Fill out Installation Completion Checklist

After the site is cleaned up, fill out the installation completion checklist (see Table 6-1) and make any necessary copies. Make copies of this checklist as needed.

Date Hardware Installation Completed: _____

Site:_____

Master BTS Cabinet Serial Number(s):_____

Expansion BTS Cabinet Serial Number(s):_____

_____

Checklist Completed By:_____

Checklist Reviewed By:_____

6

Table 6-1: Installation Completion Checklist

Status	No.	Item	Notes
	1	Cabinets are bolted down with mounting bolts properly torqued.	
	2	Each cabinet has its own earth ground that is connected to a proper site grounding system.	Ground MUST be connected first.
	3	AC power cabling completed and checked by an electrician and the AC breakers are "**OFF**".	
	4	DC power cabling between Power and RF cabinets is installed and the DC breakers are "**OFF**".	
	5	Battery breakers are "**OFF**".	
	6	RX RF cables installed.	
	7	TX RF cables installed.	
	8	RF connections are properly sealed with tape.	
	9	Span and Modem line cables installed.	
	10	RF cabinet alarm cable is installed.	

. . . continued on next page

DRAFT

Table 6-1: Installation Completion Checklist			
Status	**No.**	**Item**	**Notes**
	11	Power cabinet alarm cable is installed.	
	12	GPS antenna installed.	
	13	RGPS antenna cable installed.	
	14	RF connectors are properly torqued.	
	15	Power connections are properly torqued.	
	16	Batteries are installed, and all battery connections are made with copper–based grease and properly torqued.	
	17	Battery shelf retainers are fully seated.	
	18	Battery heater pads are properly connected.	
	19	RF cables are labeled the same at both ends.	
	20	Data cables labeled at both ends.	
	21	All cables dressed and tied	
	22	Installation and site specific manuals (log sheet) at site.	
	23	Static wrist straps are present.	
	24	Check all FRUs to verify that they are secure: LPA, EBA, etc.	
	25	LPA module cable connector (1/4 turn circular connector) is fully seated.	
	26	Visual inspect all door gaskets and verify that front and rear doors open and close properly	
	27	Eye bolts are removed and replaced with 5/8 in bolts (supplied in the installation kit).	
	28	Install pad locks if desired.	
	29	Any deficiencies reported to the appropriate people.	
	30	Site cleaned, swept, and trash removed	
	31	**NOTE** There must be a minimum of 110 Watts power being dissipated inside the cabinet to prevent condensation.	

DRAFT

Optimize the System

Optimize the system by following the procedures given in the appropriate optimization manual.

DRAFT

MOTOROLA

Appendix A: Installing RGPS

This section includes...

Introduction 123
Installation Procedure 123
RGPS Mounting Considerations 125

Tables

Installing the RGPS 123

Figures

Figure A-1 Remote GPS Mounting 124

Introduction

The objective of this procedure is to install the BTS Remote Global Positioning System receiver (RGPS) antenna.

The cable between the BTS and the RGPS head is 22 AWG 12–conductor wire configured as six twisted pairs. Power for the RGPS head is provided by the BTS via the 12–conductor cable, refer to Chapter 5 for details.

Installation Procedure

Table A-1 lists the procedures for installing the RGPS system.

Table A-1: Installing the RGPS

Step	Action
1	Determine the mounting location (see RGPS Mounting Considerations).
2	Install the mounting brackets onto the RGPS location of choice. Use the appropriate mounting bolts for mounting surface. **△ WARNING** The structure of the wall should be verified by a qualified structural engineer for the weight of the RGPS engine and mounting hardware or under adverse conditions for the installation area. **! CAUTION** Mounting the RGPS antenna and hardware to an inadequate wall structure and/or using inadequate installment methods can result in serious injury.

. . . continued on next page

DRAFT

Installing RGPS
– continued

Table A-1: Installing the RGPS	
Step	**Action**
3	Insert the prepared cable into the pipe (see Figure A-1).
4	Connect the RGPS head to the cable. To secure the connection, tighten the spinning connector flange (located on the prepared cable) see Figure A-1.
5	Insert the pipe into the threaded neck on the RGPS head and hand tighten firmly.
6	Place the assembly into the mounting brackets and secure.
7	Route the cable down to the RF cabinet.
8	Install the cable into the punch block. The punch block pin locations for the cable are listed in Chapter 5.

Figure A-1: Remote GPS Mounting

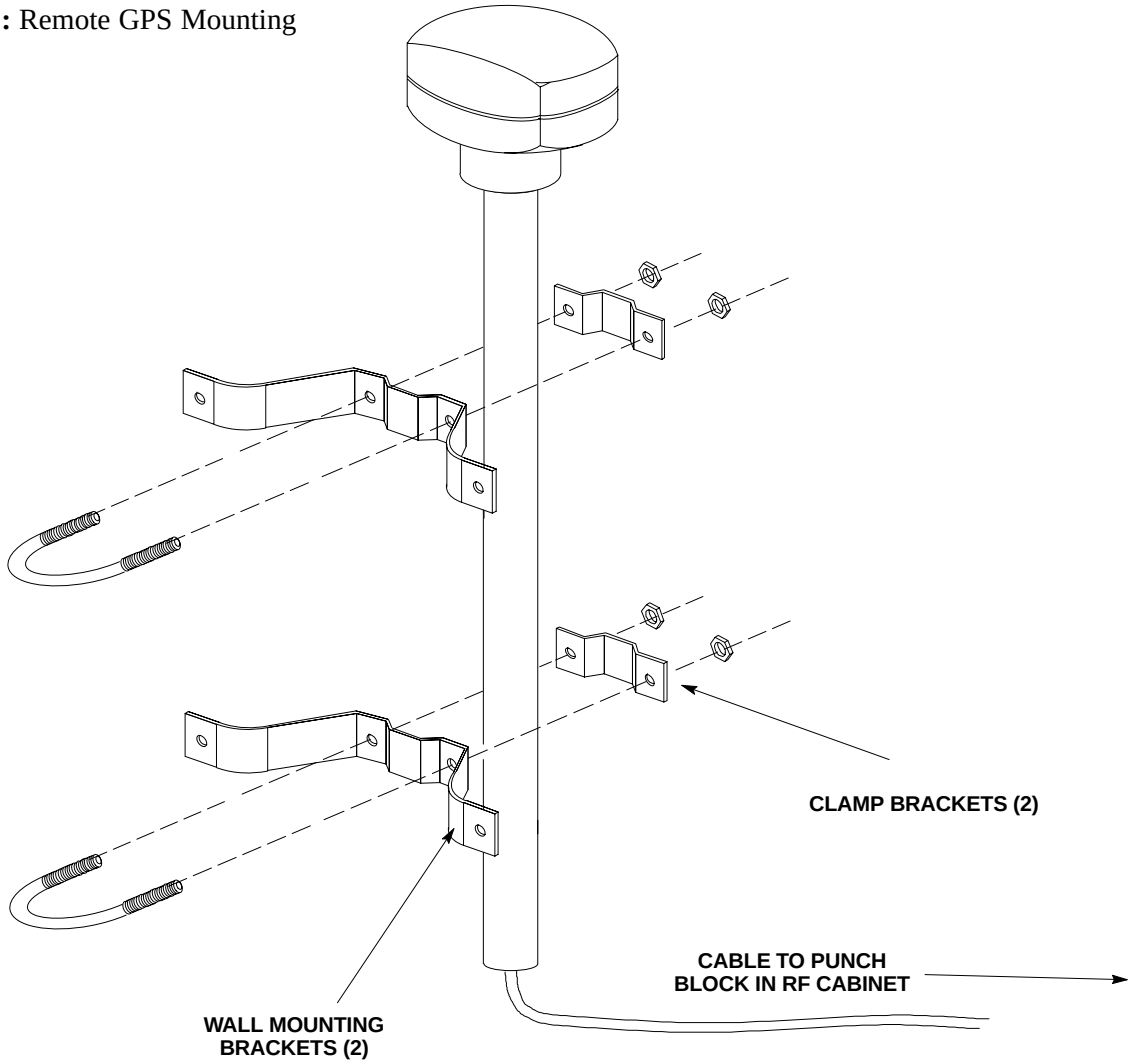

DRAFT

RGPS Mounting Considerations

The RGPS Head requires specific mounting considerations in order to properly observe the GPS satellites.

- The mounting pipe for the RGPS Head should be mounted vertically with less than five degrees (5°) of tilt.
- The RGPS Head needs to have a clear view of the sky, preferably to within ten degrees (10°) of the horizon in all directions. The less sky that can be observed the fewer the number of potential satellites that can be tracked and hence the poorer the RGPS performance.
- For general operation, the RGPS Head needs to be able to continuously track signals from at least four (4) GPS satellites. It is theoretically possible to operate the BTS with only one GPS satellite visible, however, operating in this mode it is not recommended and requires an accurate site survey.
- Place the RGPS Head where RF obstructions of the sky are minimized. The “sky” includes everything to within ten degrees (10°) of the horizon in all directions. RF obstructions includes buildings, towers, snow, foliage and debris.
- Separate the RGPS head from radiating sources. Excessive RF energy can degrade the RGPS head’s ability to observe the GPS satellites. The RGPS head receives on the GPS L1 frequency of 1575.42 MHz and has filters incorporated within to minimize the effects of potential RF interference, however, strong radiaters can overwhelm the filters, thus degrading the units reception capability.
- The RGPS Head is rated for ambient air temperatures from –40° C to +50° C, and has ratings for Humidity, Shock, Waterproof, UV Light Resistance, Vibrations, Salt, Fog, ESD, EMI, and Altitude.
- The RGPS system will support up to 2000 feet (2609 m) of overall cable length from the RGPS Head to the last connected base station. If a long cable run needs to be broken into pieces, minimize the number of breaks in the cable.

DRAFT

Notes

DRAFT

Appendix B: Cabinet Specifications

This section includes...

Overview 127
Physical Specifications 128
Indoor Ventilation Specifications 128
Grounding Specifications 128
AC Power Specifications 128
DC Power Specifications 129
GFCI/AC Outlet Specifications 129
Conduit I/O Plate Specifications 129
Battery Configuration Specifications 130
Conduit Layout Specifications 130
Circuit Breakers 134
Torque Specifications 135

Tables

Table B-1: Cabinet Dimensions & Clearances 128
Table B-2: Minimum Battery Strings Required Sector–Carrier Configurations 130
Table B-3: Circuit Breakers 134
Table B-4: Torque Specifications 135

Figures

Figure B-1: SC 4812ET Conduit I/O Plates 129
Figure B-2: Conduit Layout 131
Figure B-3: Mounting Hole Dimensions 131
Figure B-4: SC 4812ET RF Cabinet Conduit I/O 132
Figure B-5: SC 4812ET Power Cabinet Conduit I/O 133

Overview

This document is intended to be a summary of SC4812ET RF and Power Cabinet specifications presented in the body of the Installation Manual. It is not a complete listing, and should not be considered a replacement for reading the manual.

DRAFT

B

Physical Specifications

Table B-1: Cabinet Dimensions & Clearances		
Description	**Specification**	**Reference Chapter**
SC 4812ET RF Cabinet		
Height	1677mm (66”)	Chapter 1
Width	1423mm (56”)	Chapter 1
Depth	915mm (36”)	Chapter 1
Weight (Max)	680 kg (1500 lbs)	Chapter 2
Rear Clearance	510mm (20”)	Chapter 1
Front Clearance	1145mm (45”)	Chapter 1
Left Clearance	255mm (10”)	Chapter 1
Right Clearance	130mm (5”)	Chapter 1
SC 4812ET Power Cabinet		
Height	1677mm (66”)	Chapter 1
Width	1423mm (56”)	Chapter 1
Depth	965mm (38”)	Chapter 1
Weight (Max, with batteries)	1590 kg (3500 lbs)	Chapter 2
Weight (as shipped, without batteries)	544 kg (1200 lbs)	Chapter 2
Rear Clearance	660mm (26”)	Chapter 1
Front Clearance	1145mm (45”)	Chapter 1
Left Clearance	130mm (5”)	Chapter 1
Right Clearance	330mm (13”)	Chapter 1

Indoor Ventilation Specifications

If the SC4812ET is installed in an indoor location, Adequate ventilation must be available to dissipate heat loads of 7,500 Watts (25,600 Btu/hr) for the RF Cabinet and 3,000 Watts (10,300 Btu/hr) for the Power Cabinet (a total of 10,500 Watts; 35,900 Btu/hr), and maintain a maximum temperature of no greater than 50 Deg C (122 Deg F).

Grounding Specifications

The ground system resistance must be less than 10 Ohms, with 5 Ohms or less being the goal, see ”Grounding Guidelines for Cellular Radio Installations” Motorola P/N 68P81150E62 for details.

AC Power Specifications

The Power Cabinet is rated at 130 Amps (100 Amps continuous/130 non–continuous in the range of 208–240 VAC). Maximum cable size that can be accommodated is 300 kcmil. Cable sizing should be determined by Local Electric Codes, using 90 Deg C rated conductors, and derating for 50 Deg C operation. Motorola recommends not less than #2/0 AWG (#1 BSWG; 50 mm^2) copper for buried/raceway cables to the power pedestal, with an associated power pedestal breaker size of 150 Amps for a single Power Cabinet.

DRAFT

NOTE

AC Power is not present in the SC4812ET RF Cabinet.

DC Power Specifications

The maximum total voltage drop between the RF and Power Cabinet (as measured at the DC power connector in the I/O area of each cabinet) must be less than or equal to 0.4V. The Power Cabinet is shipped with Superflex #2/0 AWG cable, 12 ft. in length (See Chapter 2). Larger diameter cable or other solutions, may be used to increase the distance between cabinets provided the maximum voltage drop is not exceeded.

GFCI/AC Outlet Specifications

The Power Cabinet has two convenient GFCI/AC outlets, accessible from the rear of the Power Cabinet. The circuit breaker of the outlets is located in the Power Cabinet ACLC. The outlets are rated at a combinet total of 15A @ 104 – 120 AC for the United States, Brazil, and Peru. In addition there are five different outlets which can be configured and tailored to different countries such as Argentina, China, Chile, Israel, Hong Kong, Singapre, and the United Kingdom.

Conduit I/O Plate Specifications

Removable I/O plates are provided for conduit termination on both the RF and Power Cabinets. The panels for bottom entry are blank and can be punched to accommodate various sized conduit, the rear entry panels have knockouts sized for conduits as shown in Figure B-1. The bottom and rear entry panels can be exchanged to allow for various configurations.

Figure B-1: SC4812ET Conduit I/O Plates

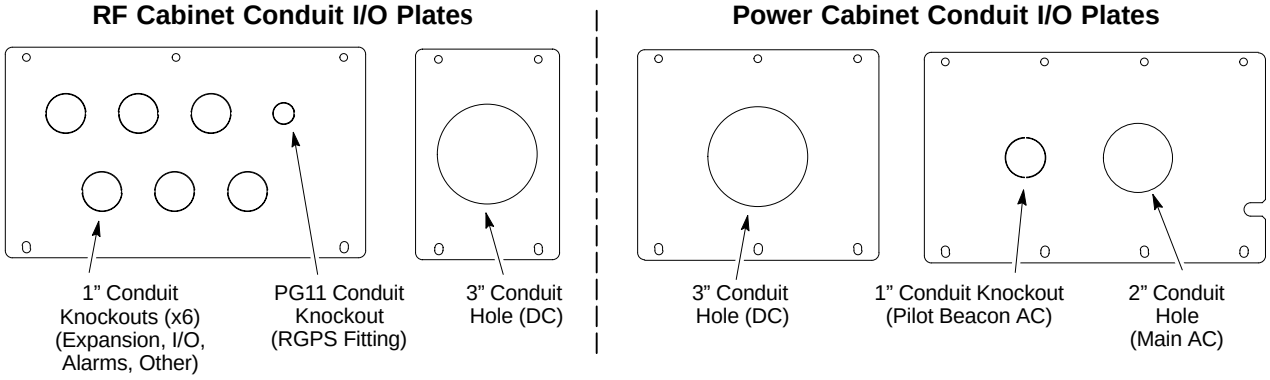

DRAFT

B

Battery Configuration Specifications

Table B-2 shows the minimum number of battery strings required for various system configurations. It is recommended to install the number of batteries required to obtain an estimated 4 hours of backup time for the SC4812ET RF Cabinet.

NOTE

The backup durations presented within this table is an estimated time based on 25 Deg C (77 Deg F) battery temperature, actual backup duration may vary with system configuration and loading.

Table B-2: Minimum Battery Strings Required for Sector–Carrier Configurations

# of Battery Strings	3 Rectifiers (3 Sector–Carriers)	4 Rectifiers (6 Sector–Carriers)	5 Rectifiers (9 Sector–Carriers)	6 Rectifiers (12 Sector–Carriers)
0	0	0	0	0
1				
2				
3				
4				
5				
6	4.0 hrs			
7	4.8 hrs	3.5 hrs		
8	5.4 hrs	4.0 hrs		
9	6.0 hrs	4.5 hrs	3.6 hrs	
10	6.7 hrs	5.0 hrs	4.0 hrs	3.3 hrs
11	7.4 hrs	5.5 hrs	4.4 hrs	3.6 hrs
12	8.0 hrs	6.0 hrs	4.8 hrs	4.0 hrs

! CAUTION

The minimum number of battery strings presented in this table must be met or reduced backup time and inadvertent tripping to the battery system breakers could result.

Conduit Layout Specifications

Figure B-2, Figure B-3, and Figure B-4 show the openings in the cabinet for conduit entry.

DRAFT

B

Figure B-2: Pad Forms and Conduit Layout

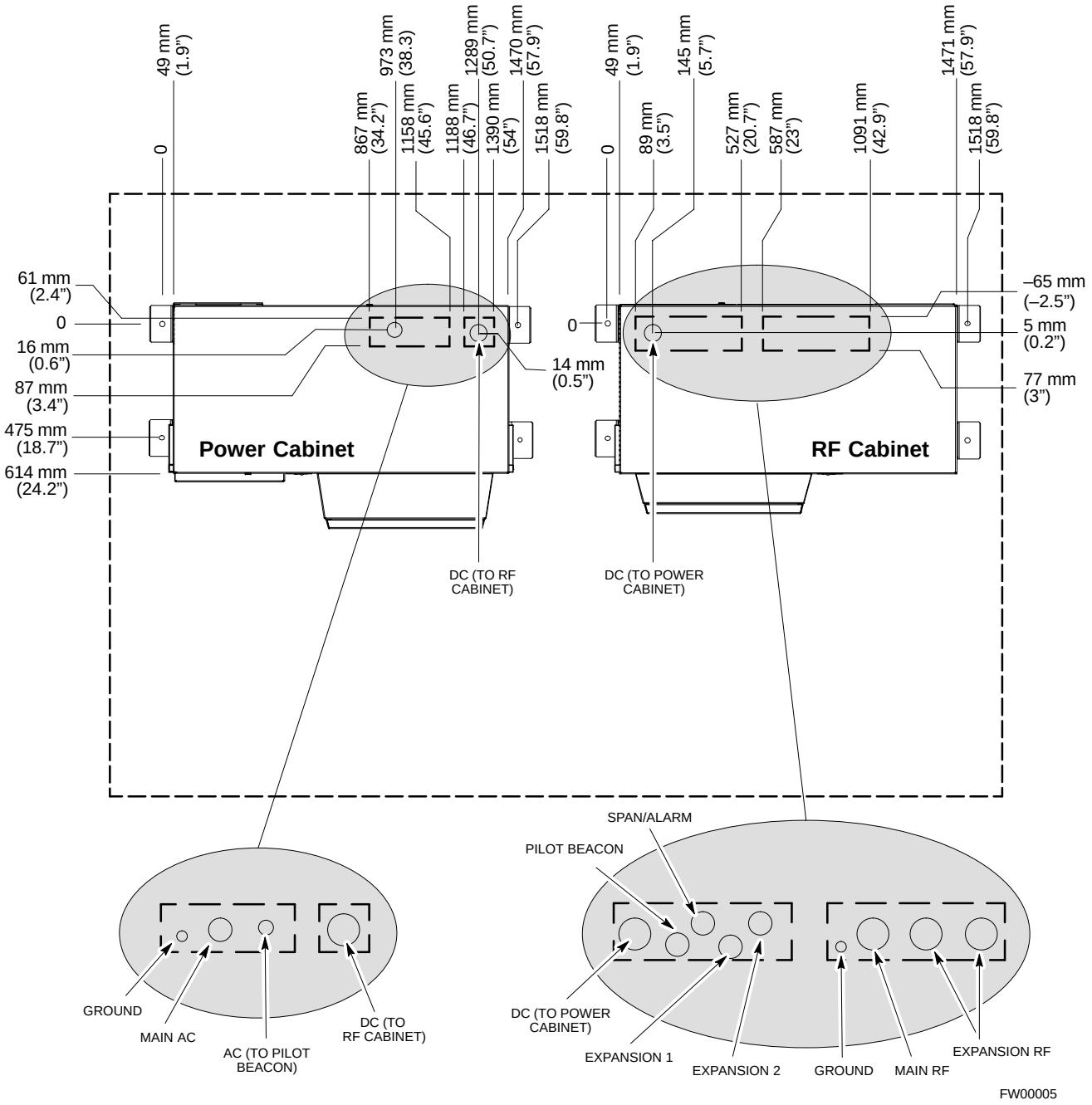

Figure B-3: Mounting Hole Dimensions

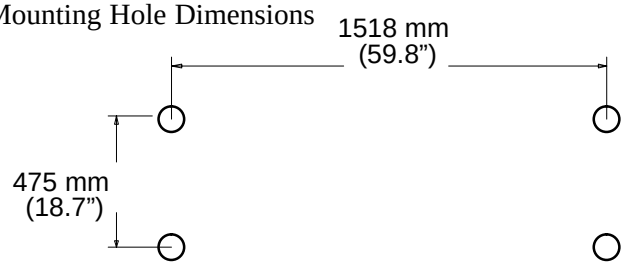

Note:
Hole Pattern is Identical for RF and Power Cabinets

DRAFT

B

Figure B-4: SC 4812ET RF Cabinet Conduit I/O

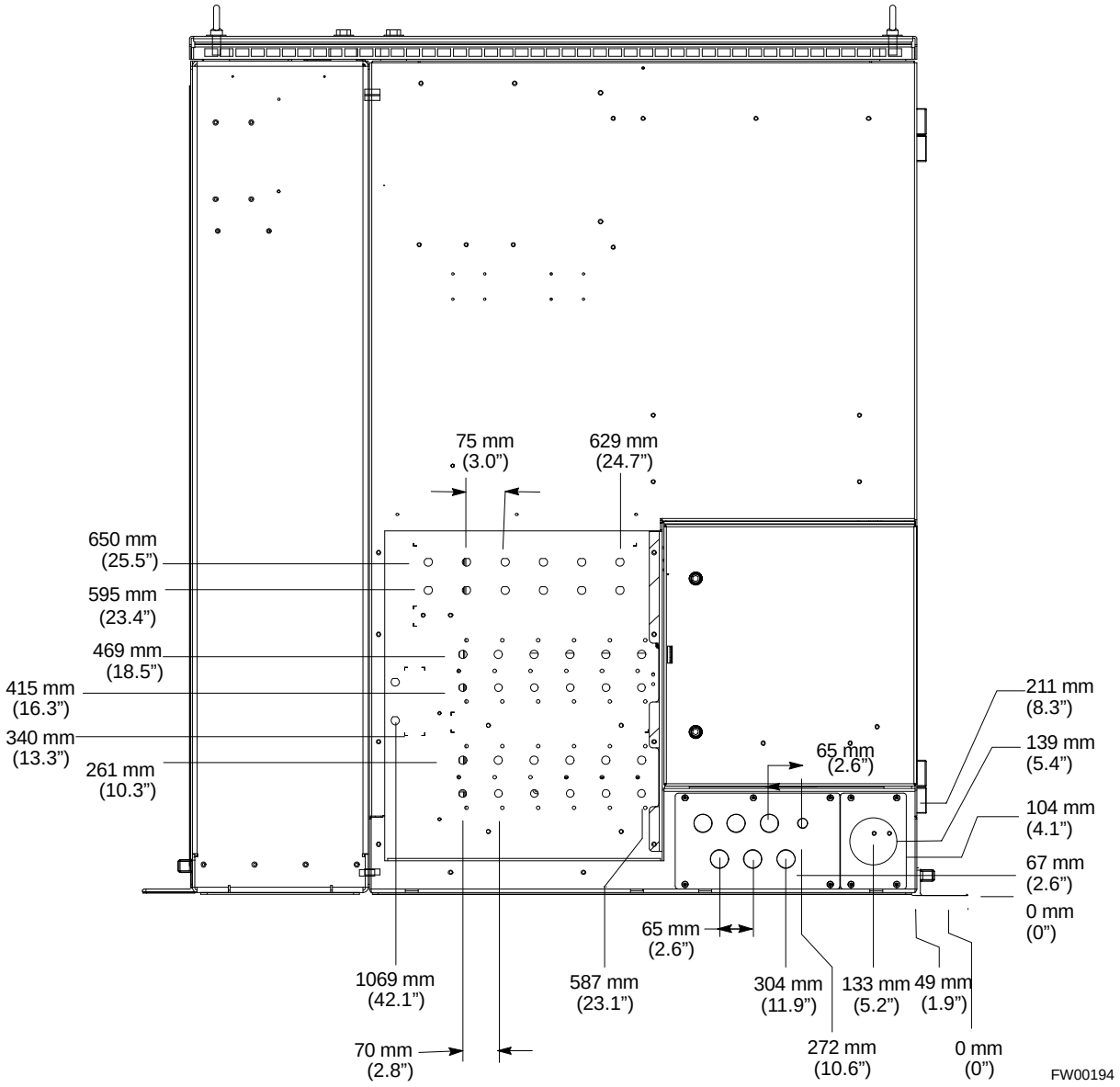

DRAFT

Figure B-5: SC 4812ET Power Cabinet Conduit I/O

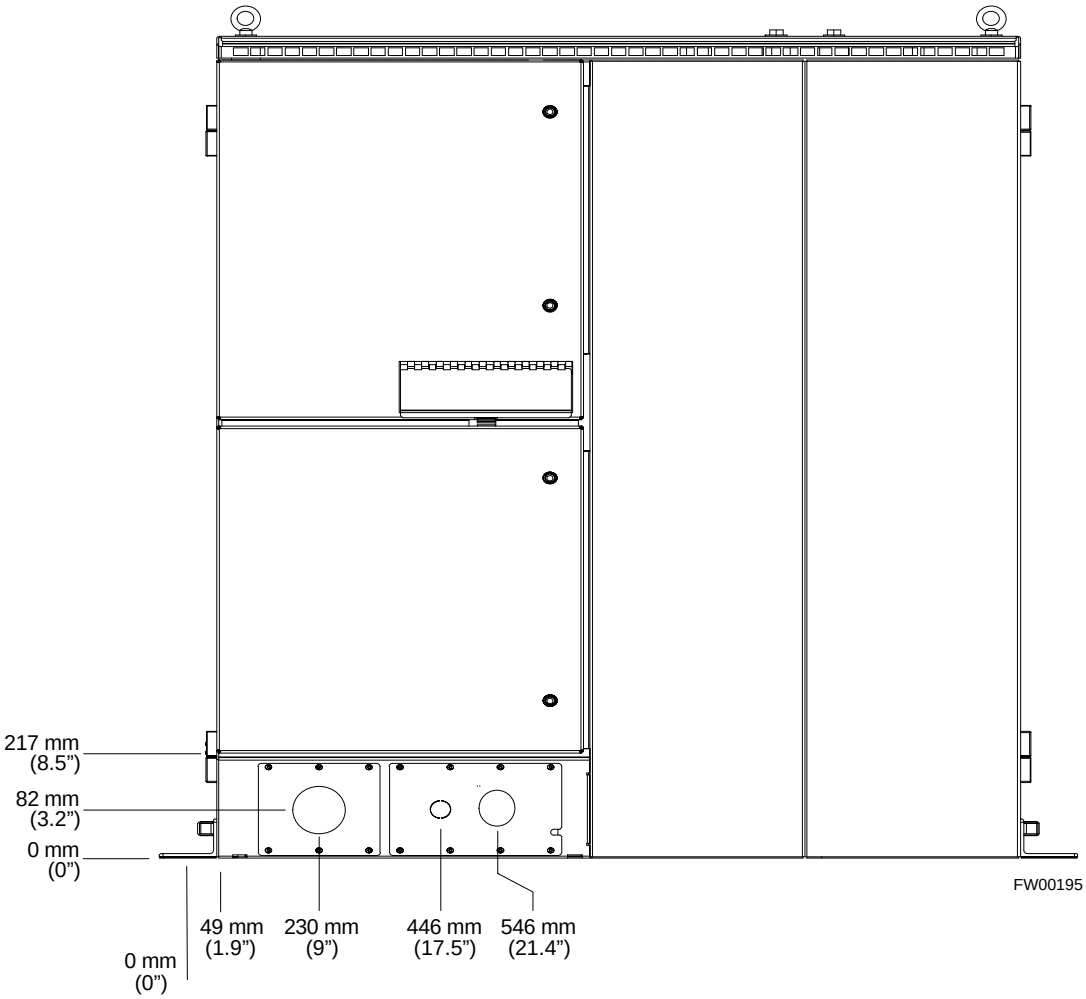

DRAFT

B

Circuit Breakers

Table B-3 is a list of all of the circuit breakers (AC and DC) present in the SC4812ET RF and Power Cabinet.

Table B-3: Circuit Breakers

Breaker Size	Description	Qty
SC 4812ET RF Cabinet		
400A DC	Main Breaker	1
50A DC	LPA Breaker (1 per pair of LPA's)	8
10A DC	ETIB	1
10A DC	External Blower Assembly	2
25A DC	Heat Exchanger	2
15A DC	Options	1
SC 4812ET Power Cabinet: North American		
150A AC	Main Breaker	1
70A AC	Rectifier Breaker (1 per shelf)	2
15A AC	Battery Heater (1 per battery compartment)	2
15A AC	GFCI	1
15A AC	Spare (Pilot Beacon)	1
SC 4812ET Power Cabinet: International		
160A AC	Main Breaker	1
63A AC	Rectifier Breaker (1 per shelf)	2
16A AC	Battery Heater (1 per battery compartment)	2
10A AC	AC Outlet	1
10A AC	Spare (Pilot Beacon)	1
SC 4812ET Power Cabinet: Common		
160A DC	Main Breakers	3
25A DC	Heat Exchanger	2
2A DC	Breaker System Breaker	1
5A DC	Internal Fan	1
80A DC	Battery String Breakers	12

DRAFT

B

Torque Specifications

Table B-4 lists the appropriate torques for various fastening hardware used throughout the SC4812ET cabinets.

Table B-4: Torque Specifications

Fastener Size	Head Size	Torque	Comments
5/8”	24 mm (15/16”) Hex	80 N–m (60 ft–lbs)	Sunshade Bolts
M12	19 mm (3/4”) Hex	80 N–m (60 ft–lbs)	Cabinet Mounting
M12	19 mm (3/4”) Hex	135 N–m (100 ft–lbs)	Mounting Bracket to Cabinet
M10	17 mm (11/16”) Hex	12 N–m (110 in–lbs)	DC Power
M8	13 mm Hex	7 N–m (55 in–lbs)	
M6	10 mm Hex, T30 Torx	6 N–m (50 in–lbs)	Conduit Panels
M4	7 mm Hex, T20 Torx	3 N–m (25 in–lbs)	
M3	T10 Torx	1 N–m (13 in–lbs)	
4–40	T15 Torx	1 N–m (10 in–lbs)	LPAs, Combiners
PG7 Nut	20 mm Open Hex	2 N–m (22 in–lbs)	Power Cabinet
PG9 Nut	22 mm (7/8”) Open Hex	4 N–m (33 in–lbs)	Power Cabinet
PG11 Nut	25 mm (1”) Open Hex	2 N–m (18 in–lbs)	RGPS Fitting
PG13 Nut	27 mm Open Hex	4 N–m (33 in–lbs)	Power Cabinet
PG29 Nut	46 mm Open Hex	7 N–m (66 in–lbs)	Power Cabinet
N–Connector	19 mm (3/4”) Open Hex	4 N–m (60 in–lbs)	RF Cables
SMA	SMA Torque Wrench	1 N–m (10 in–lbs)	RFDS Cables
1/4”	7/16”	12.4 N–m (110 in–lbs)	Johnson TEL 12–105F Battery Terminal (suppliers may very)

DRAFT

B

Notes

DRAFT

Appendix C: Installation Quickstart

This section includes...

Introduction to Document 137
Tools and Hardware 138
Site Considerations 138
RF and Power Cabinet Installation 139
Concrete Pad Mounting 139
Rooftop or Other Structure Mounting 139
Battery Heater and Battery Installation 140
Cabinet Cabling Procedures 140
Earth Ground Cabling 140
Alarm, Span Line, and RGPS Cabling 140
Main RF Cabling 141
DC Power Cabling 141
AC Power Cabling 143
Heat Dissipation 144

Tables

Table C-1: Site Considerations 138
Table C-2: Site Prep and Cabinet Mounting on Concrete Pad . . 139
Table C-3: Site Preparation and Cabinet Mounting on a Rooftop 139
Table C-4: Installing the Earth Ground Cable 140
Table C-5: Alarm, Span Line, Remote GPS Cables Install 140
Table C-6: DC Power Cabling Installation Procedure 142
Table C-7: AC Power Cabling Procedures 143

Introduction

This “SC 4812ET Hardware Installation Quickstart” is meant as a supplement to the SC4812ET Hardware Installation Manual (6864114A22), hereinafter called “the manual”, and not as a replacement for reading the manual. In case of any discrepancies, the manual should be considered the correct and final reference.

DRAFT

C

Tools and Hardware

- Wire Cutters
- 110 style Punch Block Punch Tool (CGDS237176)
- Crimp Tool for Compression Lug (CDGSTBM25S)
- Drill Motor
- 18 mm (11/16”) Masonry Drill bit
- Torque Driver (**NOTE:** Torque range is from 5 to 135 N–m (from 4 to 100 ft–lbs)
- 10 mm Socket
- Tin Snips
- 19 mm (3/4”) Open Ended Torque Wrench (for N–type connector)
- Thomas & Betts TBM14 Hydraulic crimping tool with color keyed crimp die set (or equivalent)
- 19 mm (3/4”) Deep Socket

Site Considerations

A quick reference of specific site considerations is shown in Table C-1.

Table C-1: Site Considerations

✓	Site Consideration	References and Recommendations
	Clearances around BTS	See chapter 1 in the manual for figures. **Power Cabine**t: Front = 45” Back = 26” Left Side = 5” Right Side = 13” **RF Cabine**t: Front = 45” Back = 20” Left Side = 10” Right Side = 5”
	Adequate Ventilation (Indoor Unit Only)	Ventilation to dissipate heat loads of 7,500 W (25,600 Btu/hr) for the RF Cabinet, and 3,000 W (10,300 Btu/hr) for the Power Cabinet (a total of 10,500 Watts; 35,900 Btu/hr). Maximum Ambient Temperature of 50 Deg C (122 Deg F)
	Location	Locations should be selected to minimize accidental or intentional vandalism, and not be subject to submersion or potential flooding. Adequate clearance through door and passageways to allow movement of the cabinet.
	Rooftop installation	SC 4812ET RF Cabinet maximum weight = 680 kg. (1500 lbs.) SC 4812ET Power Cabinet maximum weight = 1580 kg. (3500 lbs.) Ensure that all loading & zoning requirements have been approved
	BTS Mounting holes drilled	See Chapter 2 – “Drilling Procedures”
	AC Power Pedestal or Meter Provided	Recommended power pedestal breaker rated @ 150Amps for one BTS, or per Local Electrical Code.
	AC Power Supplied to site	See Chapter 2, “Materials Needed” BTS rated @ 130A (208–240VAC)
	Alarm and Span Line Cable Equipment Available	Twenty–five (25) twisted pair cable, 1” watertight conduit
	Ground Wire Connection Supplied	Motorola recommends #3 BSWG (#2 AWG) solid–tinned wire.

. . . continued on next page

DRAFT

Table C-1: Site Considerations		
✓	**Site Consideration**	**References and Recommendations**
	DC Power Connection Supplied	#2/0 AWG Cable Shipped with Power Cabinet (length = 12 ft.); 3” Trade Size Conduit
	Transmission Cable & Conduit	See chapter 2 in the manual for dB loss per foot, minimum bending radius, and conduit information
	Crane Available or scheduled	If required

RF and Power Cabinet Installation

The following tables include site preparation and step–by–step procedures for mounting the SC4812ET RF and Power Cabinets.

Concrete Pad Mounting

Table C-2 covers the cabinet mounting instructions on a concrete pad, this procedure should be followed for both the RF and Power Cabinet.

Table C-2: Site Preparation and Cabinet Mounting on a Concrete Pad	
Step	**Action**
1	**NOTE** – If constructing a new concrete pad, follow the procedures detailed in Chapter 2 ”New Concrete Pad Installation” in the manual. – Drill the cabinet mounting holes per the procedures in Chapter 2 of the manual. Motorola recommended anchor bolts require 18 mm (11/16”) drill size.
2	Verify that the mounting holes have been drilled in the proper locations.
3	Install the cabinet per the procedures in Chapter 4 of the manual. If the recommended anchor bolts are used, they should be tightened to a torque of 80 N–m (60 ft–lbs).

Rooftop or Other Structure Mounting

Table C-3 covers the cabinet mounting instructions on a rooftop or other structure, this procedure should be followed for both the RF and Power Cabinet.

Table C-3: Site Preparation and Cabinet Mounting on a Rooftop	
Step	**Action**
1	Review the roof load carrying limits, and ensure that the appropriate support structure is in place.
2	Install the cabinet per the procedure in Chapter 4 of the manual. If the Motorola supplied mounting bolts are used, they should be tightened to a torque of 80 N–m (60 ft–lbs).

DRAFT

Battery Heater and Battery Installation

See Chapter 4 of the manual for instructions to install the battery heater pads and batteries in the Power Cabinet.

Cabinet Cabling Procedures

C

The following tables are step–by–step procedures for the SC4812ET cabling.

Earth Ground Cabling

Follow Table C-4 to install the earth ground cable in both the RF and Power Cabinet.

Table C-4: Installing the Earth Ground Cable

Step	Action
1	Route the ground cable to the rear of the cabinet. The ground studs are located in the RF I/O area on the RF cabinet, and in the AC I/O area on the Power Cabinet. **NOTE** Motorola recommends #3 BSWG (#2 AWG; 35 mm^2) solid–tinned copper wire for the ground cable.
2	Strip insulation from the cabinet end of the cable.
3	Attached the two–holed ground lug supplied with the installation hardware to the stripped end of the cable. Use the proper crimp tool (Motorola P/N CGDSSTBM25S or equivalent).
4	Connect the two–holed lug to the cabinet ground studs and secure with the two (2) M6 nuts supplied with the installation hardware. Torque to 5 N–m (45 in–lbs.).

Alarm, Span Line, RGPS and Power Cabinet Alarm Cabling

Table C-5 is for alarm, span line cabling, and Remote GPS Installation procedures.

Table C-5: Alarm, Span Line Cabling, and Remote GPS Cable Install

Step	Action
1	Refer to Table A-1 in the manual for installing the RGPS prior to proceeding.
2	Route the Alarm, Span Line and RGPS twisted pair cable(s) through the conduit, the RF I/O boot, and to the punch block. Refer to Chapter 5 in the manual for the proper locations on the RF cabinet.
3	Connect the Alarm, Span Line, and Remote GPS pairs from the cable to the punch block using only the recommended 110 style punch tool (CGDS237176 or equivalent), per the pin–call–outs in Chapter 5 of the manual.
4	Strain relief the cable by tie wrapping it to the punch block as shown in Chapter 5 of the manual.

. . . continued on next page

DRAFT

Table C-5: Alarm, Span Line Cabling, and Remote GPS Cable Install	
Step	**Action**
5	Route the Power Cabinet Alarm Cable from the RF Cabinet to the Power Cabinet (in 3” DC conduit) and through the Power I/O Boot to the Punch Block.
6	Connect the Power Cabinet Alarm cable pairs to each punch block per the pin–callouts in Chapter 5 of this manual.
7	Strain relief the cable by tie wrapping it to the punch block as shown in Chapter 5 of the manual.

Main RF Cabling

RF cabling depends upon system configuration, see site documentation and chapter 5 of the manual for details regarding RF cabling.

DC Power Cabling

Table C-6 describes the procedure for connecting DC Power Cabling.

WARNING

Do NOT wear a wrist strap when servicing the power supplies or power distribution cabling. Serious personal injury can result.

CAUTION

Before starting the procedure, ensure that the Power Cabinet main DC breakers are turned ”OFF”.

NOTE

The hole in the I/O panel of the cabinets is the proper size for a US Standard 3” conduit fitting.

Figure C-1: Connecting Power Cables

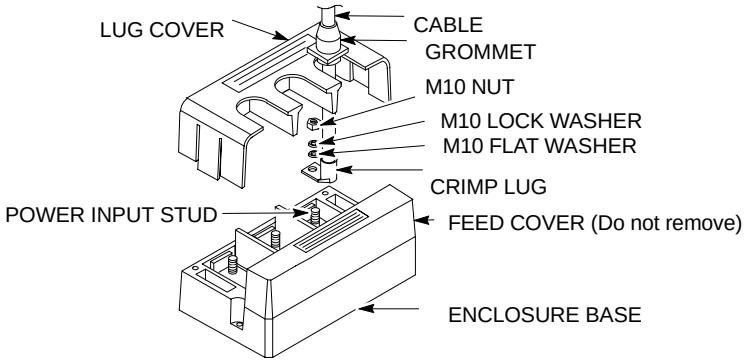

DRAFT

C

Table C-6: DC Power Cabling Installation Procedure	
Step	**Action**
1	Ensure that all three (3) main DC breakers in the Power Cabinet are “OFF.”
2	Route the DC conduit from the I/O area of the Power Cabinet to the I/O area of the RF Cabinet. See Figure 5-1 for suggested location. **NOTE** This step is omitted if the DC conduit is already installed through the concrete pad.
3	Route the three (3) RED +27V feed power cables through the conduit and to the DC power connector in each cabinet through the rubber boot (see Figure 5-6) in the floor of the I/O area. **NOTE** The rubber boot is sized to seal either a #2/0 AWG or #4/0 AWG power cable, if a different sized cable is used other means may be required to ensure a good seal. A tie wrap or hose clamp must be used to ensure a good seal around the cables at the boot.
4	Route the three (3) BLACK –27V feed power cables through the conduit and to the DC power connector in each cabinet through the rubber boot (see Figure 5-6) in the floor of the I/O area. **NOTE** The rubber boot is sized to seal either a #2/0 AWG or #4/0 AWG power cable, if a different sized cable is used other means may be required to ensure a good seal. A tie wrap or hose clamp must be used to ensure a good seal around the cables at the boot.
5	At the RF Cabinet end of each DC power cable, strip insulation equal to the length of the crimping lug barrel, plus an additional 5 mm (0.2”). **! CAUTION** Route the cables through the rubber boot **BEFORE** crimping lug onto wire or damage to the boot can occur.
6	Trim the top (tapered end) of the cable grommet to allow the grommet to slide over the cable. Ensure that the grommet fits firmly around the cable.
7	Slide one cable grommet over each cable at the connector box.
8	Insert the cable into the barrel of the right angle crimp lug.
9	Crimp the lug to the cable.
10	Repeat steps 8–9 for the remaining power cable(s).
	NOTE Be sure to observe the polarity of each cable as you install the cables to the power input studs on the RF Cabinet.
11	Assemble the power cable to the studs as follows:
11a	– Place the cable lugs over the power input studs.
11b	– Place the M10 flat washer over the stud and on top of the lug.
11c	– Place the M10 lock washer over the stud and on top of the flat washer.

. . . continued on next page

DRAFT

Table C-6: DC Power Cabling Installation Procedure	
Step	**Action**
11d	– Place the M10 nut over the stud and on top of the washer. **! CAUTION** Exceeding the torque limit may damage the stud.
11e	– Torque (tighten) nuts to 11–12 N–m (100–110 in–lbs).
12	Repeat steps 11a through 11e for the remaining power cables.
13	Position the lug cover over the base and lock the cover (it will snap) onto the enclosure base.
14	Slide each grommet down the cable and over the cable entry hole.
15	Repeat step 5 through step 14 for the Power Cabinet connections.
16	Verify that DC polarity between the RF and Power Cabinet is correct.

AC Power Cabling

The Power Cabinet is rated at 130 Amps (90 Amps continuous/130 non–continuous in the range of 208–240 VAC). Maximum cable size that can be accommodated is 300 kcmil. Cable sizing should be determined by Local Electric Codes, using 90 Deg C rated conductors, and derating for 50 Deg C operation. Motorola recommends not less than #2/0 AWG (#1 BSWG; 50 mm^2) copper for buried/raceway cables to the power pedestal, with an associated power pedestal breaker size of 150 Amps for a single Power Cabinet.

For more details about the AC rating of the cabinet, see Chapter 5 of the manual.

Table C-7 describes the AC Power Cabling installation procedures.

CAUTION

– Dangerous voltages are present that can cause serious injury or death. AC power wiring must be installed by qualified personnel only.

– High Leakage current. Earth ground connection is essential before connecting the power supply. Ground connection is also required before connecting any incoming telecom lines to ensure protection from surges.

Table C-7: AC Power Cabling Procedures	
Step	**Action**
1	Verify that the breaker box (at the power meter) is **OFF**.
2	Open the lower rear I/O door on the Power Cabinet, and remove the AC Load Center access panel (loosen the screws in the panel to open).

DRAFT

Table C-7: AC Power Cabling Procedures	
Step	**Action**
3	Route the AC power conduit to the rear or bottom (as appropriate) AC I/O panel on the cabinet and terminate conduit.
4	Route the 208–240 VAC power wires from the power meter breaker box, through the AC power conduit, through the I/O boot, to the AC load center.
5	Connect the AC wires to the appropriate terminals (see Chapter 5 for details).

Heat Dissipation

IMPORTANT

The minimum heat dissipated to prevent condensation inside the cabinet under the extremes of environmental conditions is 110 Watts for the RF Cabinet and 110 Watts for the Power Cabinet. This can be accomplished by following the Initial Power Up procedures in the SC 4812ET ATP manual.

DRAFT

MOTOROLA

Appendix D: SC 4812ET/SC 614 BTS DC Power Sharing

D

This section includes...

Scope and Introduction 145
Configuration 146
DC Power Connection 147
Installing DC Power Cabling 148
Reinstall Access Panel 150
Applying AC and DC Power 155

Tables

Table D-1: Battery/Rectifier Configuration 147
Table D-2: Materials Required for DC Power Cabling 148
Table D-3: SC 614 DC Power Cabling 148
Table D-4: Reinstall the Access Panel (SC 614) 151
Table D-5: Wire, Lug, and Die Table 152
Table D-6: Procedure to Install DC Power Cables 154

Figures

Figure D-1: SC4812ET/SC614 Base Station DC Power Sharing 146
Figure D-2: Backup DC Power Cable Routing 149
Figure D-3: Cold Shrinking the compression lug 150
Figure D-4: Cover installation 150
Figure D-5: Reinstall Access Panel 151
Figure D-6: Connecting Power Cables 153

Scope and Introduction

The purpose of this appendix is to provide instructions on how to connect an SC 614 BTS to an SC 4812ET Power Cabinet in order to share DC power and battery backup support. For details regarding RF cabling considerations for a SC 4812ET and a SC 614T BTS, see Appendix E.

The SC 4812ET Power cabinet provides 27 Volts DC power to an associated SC 4812ET RF Cabinet. For sites where the SC 4812ET will be co–located with an SC 614 base station, it can be advantageous for space and other considerations to be able to use the SC 4812ET Power Cabinet as a DC source for both the SC 4812ET and SC 614 BTS.

. . . continued on next page

DRAFT

This document describes how to install and configure the equipment to provide this functionality.

Configuration

The SC 4812ET Power Cabinet consists of a rectifier system with up to six 27 Volt DC, 70 Amp modules, depending on the number of carriers it is required to support in the SC 4812ET RF Cabinet.

Connections to the SC 4812ET are made via six #2/0 AWG superflex (three red and three black) cables, to allow redundancy on the DC connections, and to minimize voltage drop.

Up to 12 battery strings can be provided in the Power Cabinet to support up to four hours of battery backup in a fully equipped SC 4812ET RF cabinet.

When connecting an SC 614 BTS to the SC 4812ET Power Cabinet, only four #2/0 AWG superflex (two red and two black) cables are used for the SC 4812ET. The spare set of terminals on the Power Cabinet are used to feed the SC 614 (see Figure D-1).

Figure D-1: SC4812ET/SC614 Base Station DC Power Sharing

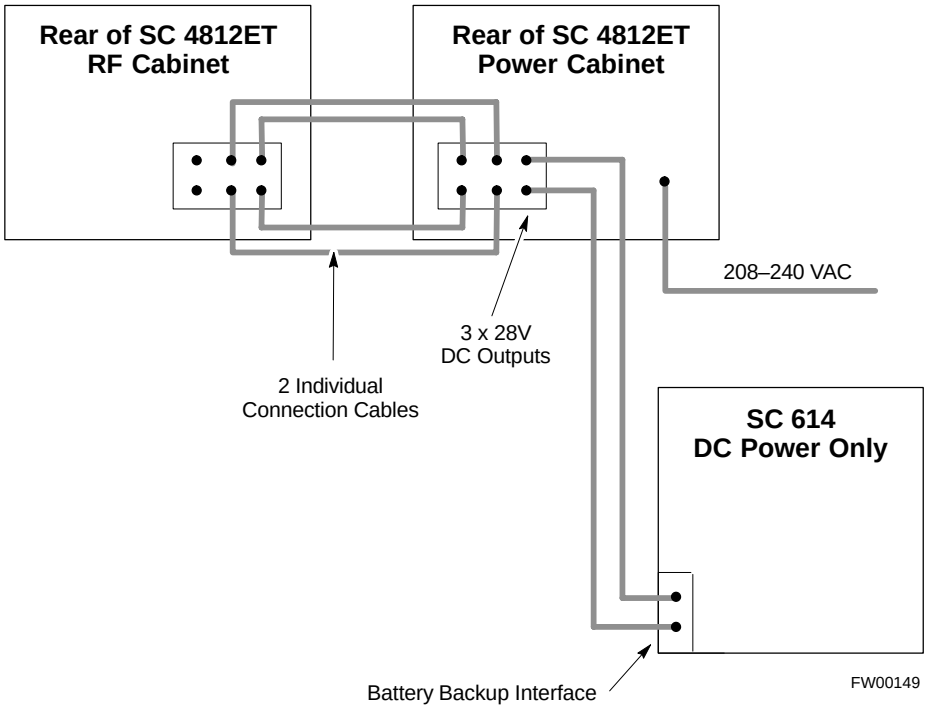

DRAFT

CAUTION

The SC 614 **MUST NOT** be connected to an AC source in this configuration. As shown in Figure D-1, AC should **ONLY** be connected to the SC 4812ET Power Cabinet. To ensure that accidental AC connection cannot occur to the SC 614, the four AC Power cables that connect from the SC 614 AC Load Center to each of the Power Supply units should be removed. Failure to do this could result in damage to the SC 614 Power Supplies and misoperation of the entire system.

Due to the reduction in load capacity of the power cabinet, the battery/rectifer configuration and number of sector–carriers that can be supported in the SC 4812ET RF Cabinet are changed compared to the standard SC 4812ET documentation.

Table D-1: Battery/Rectifier Configuration

Number of Rectifier Modules	Number of Battery Strings	SC 4812ET Sector Carriers	System Battery Backup Time (hours)
4	8	3	4
4	12	3	6
5	10	6	4

SC 614 DC Power Connection

The objective of this procedure is to connect the DC power cable from the Power Cabinet to the SC 614 BTS.

WARNING

Battery Power must be removed from the system until all connections are made to the BTS.

DRAFT

Materials

Lug (for supplied cable)

- Motorola Part Number (2910262A12) or Panduit Part Number (LCD3/0–14BX)

Cold Shrink (included with the SC 614 Install Kit)

- Motorola Part Number (3764683A01) or 3M Part Number (CST 045–095–300)

Table D-2: Materials Required for DC Power Cabling

Qty	Description
4	M6 Lock Nut
1	Red DC Power Cable, 2/0 Weld (CGDS2/0WREDFT)
1	Black DC Power Cable, 2/0 Weld (CGDS2/0WBLKFT)
1	51 mm (2”) moisture tight is recommended
2	Two–hole lug supplied with Installation Kit (Motorola P/N 2910262A12)
1	Tubing supplied with the Installation Kit (Motorola P/N 3764683A01)

D

Installing SC 614 DC Power Cabling

This procedure is used to install the SC 614 BTS DC power cabling.

Table D-3: SC 614 DC Power Cabling

Step	Action
1	**NOTE** This step is omitted if the DC conduit is already installed through the concrete pad. Route the DC conduit to the side wall of the BTS. See Figure D-2 for location.
2	Route the RED 28V feed power cable through the conduit opening on side of BTS (see Figure D-2).
3	Route the BLACK 28V Return cable though the conduit opening on the side wall of the BTS (see Figure D-2).
4	Strip the wire from both cables (RED and BLACK) approximately 25 to 29 mm (1 to 1–1/8” inches).
5	Install the crimp lugs to the end of each cable and crimp with tool (CGDSTBM14LOCK) or equivalent.
6	Connect BLACK 28V Return cable to the Main Ground Bar using two (2) nuts supplied with the installation hardware. Torque to 5 N–m (45 in–lbs).
7	Install cold shrink tubing (Motorola P/N 3764683A01) onto the RED 28V feed cable (see Figure D-3). *** IMPORTANT** Cold shrink tubing must cover the compression lug up to the flat portion of the lug (see Figure D-3).

. . . continued on next page

DRAFT

Table D-3: SC 614 DC Power Cabling	
Step	**Action**
8	Pull the exposed end of the cold shrink tubing until it begins to unravel. Make sure that the tubing is positioned over the proper location on the lug. Pull the tube until the cold shrink is attached.
9	Loosen the two (2) screws that retain the BBI (Battery Backup Interface) cover (see Figure D-4 for location). Slide cover towards the back of the BTS and remove it.
10	Attach the RED 28V feed power cable to the exposed studs on the BBI with the lock nuts supplied with the installation hardware (see Figure D-2). Torque to 5 N–m (45 in–lbs).
11	Reinstall the BBI cover and slide it towards the front of the BTS. Torque to 2 N–m (15 in–lbs).

D

Figure D-2: SC 614 Backup DC Power Cable Routing

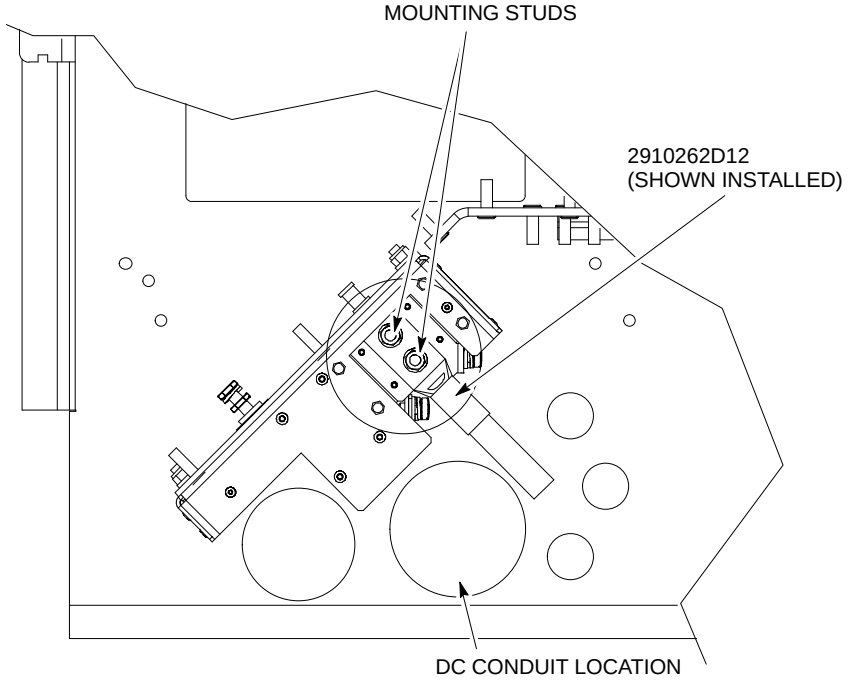

DRAFT

Figure D-3: Cold Shrinking the compression lug

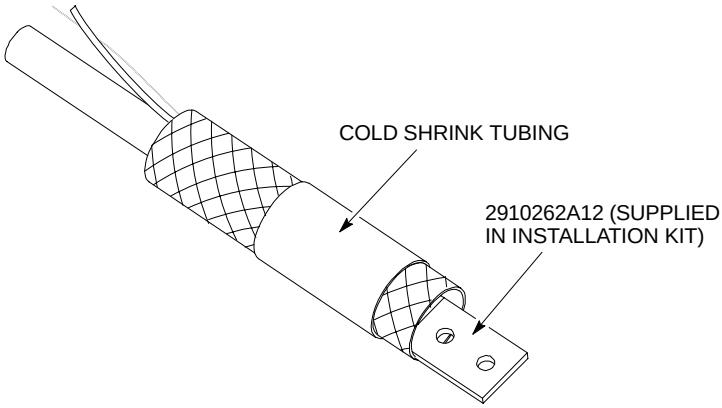

D

Figure D-4: Cover installation

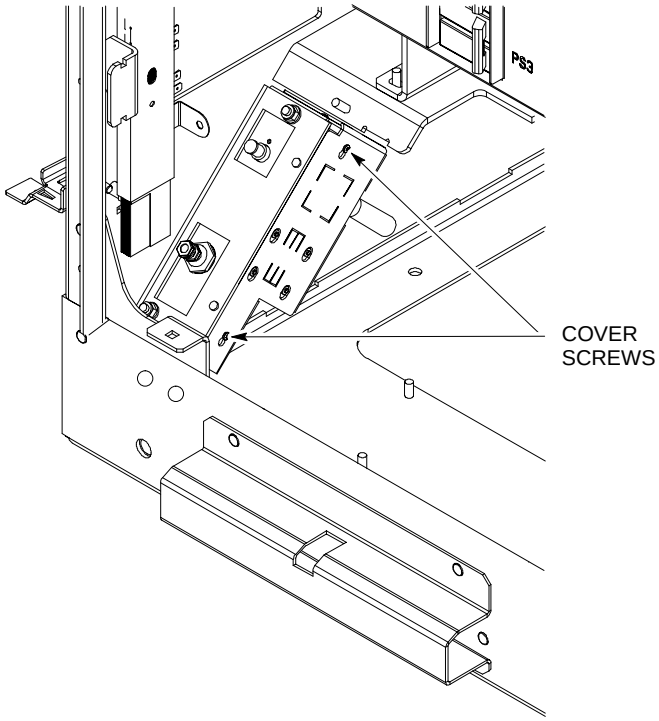

Reinstall Access Panel

The objective of this procedure is to reinstall the access panel at the bottom of the SC 614 BTS. Refer to Figure D-5 and follow the procedures in Table D-4.

DRAFT

Table D-4: Reinstall the Access Panel (SC 614)	
Step	**Action**
1	Loosen the three (3) nuts that hold the I/O cover in place at the bottom of the BTS (see Figure D-5). and reinstall the panel. **NOTE** The access panel is a two–piece panel; install the right side first.

IMPORTANT

In order to keep radiated and conducted emissions within specifications, it is necessary to install all 3 of the nuts and torque them properly.

D

Figure D-5: Reinstall Access Panel

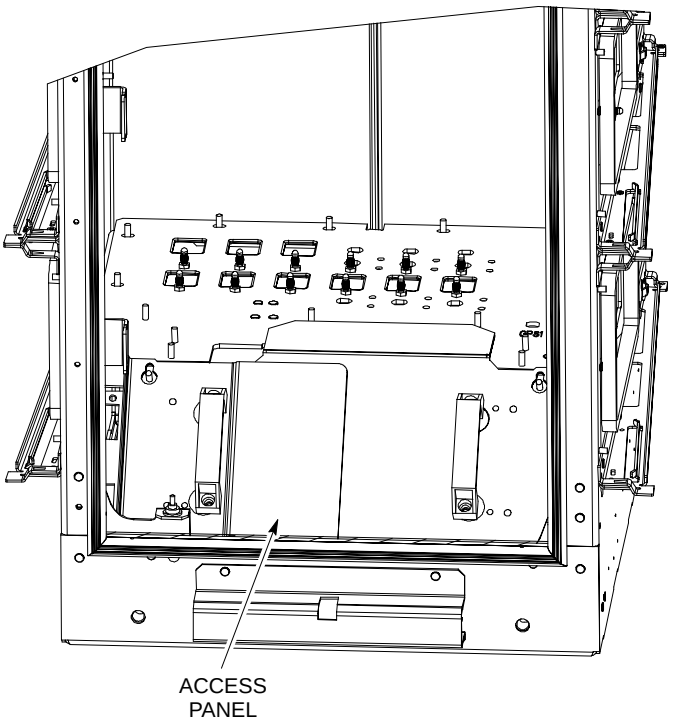

DC Power Interconnect to RF Cabinet and SC 614

Overview

The following details are excerpts from the Chapter 5 of this manual.

NOTE

Only two of each red and black cables will be connected from the SC 4812ET Power Cabinet to the SC 4812ET RF Cabinet. The remaining connection will be used to power the SC 614 BTS.

D

The objective of this procedure is to connect the DC power cabling to the RF Cabinet from the Power Cabinet.

WARNING

ALL power must be removed from the system until all connections are made to both the RF and Power Cabinet.

Ensure that all breakers in both the RF and Power Cabinet are turned in the "**OFF**" (opened) position.

Tools and equipment required

The following tools are required to install the power cables:

- Thomas & Betts TBM14 Hydraulic crimping tool with color keyed crimp die set (or equivalent). Contact Thomas & Betts for information concerning equivalent tools.
- 17 mm socket
- Torque wrench capable of 110 in–lbs

Table D-5: Wire, Lug, and Die Table

Motorola Part Number for Lugs	Wire Size				Color and Die Code
	AWG	Metric (mm)	Welding (Superflex)	Circular Mills Area	
CGDS256306951514	2/0 AWG	60–70	1/0	133,400	BLACK 45
CGDS256306951539	3/0 AWG	85–95	2/0	167,800	ORANGE 50
CGDS256306951515	4/0 AWG	100–107	3/0	211,600	PURPLE 54
CGDS256306951540	N/A	N/A	4/0	250,000	YELLOW 62

Power input connections

Figure D-6 shows how the power cable is connected to the RF and Power Cabinet. Figure 5-1 show the location of the DC power connector in the RF Cabinet and Power Cabinet.

DRAFT

Figure D-6: Connecting Power Cables

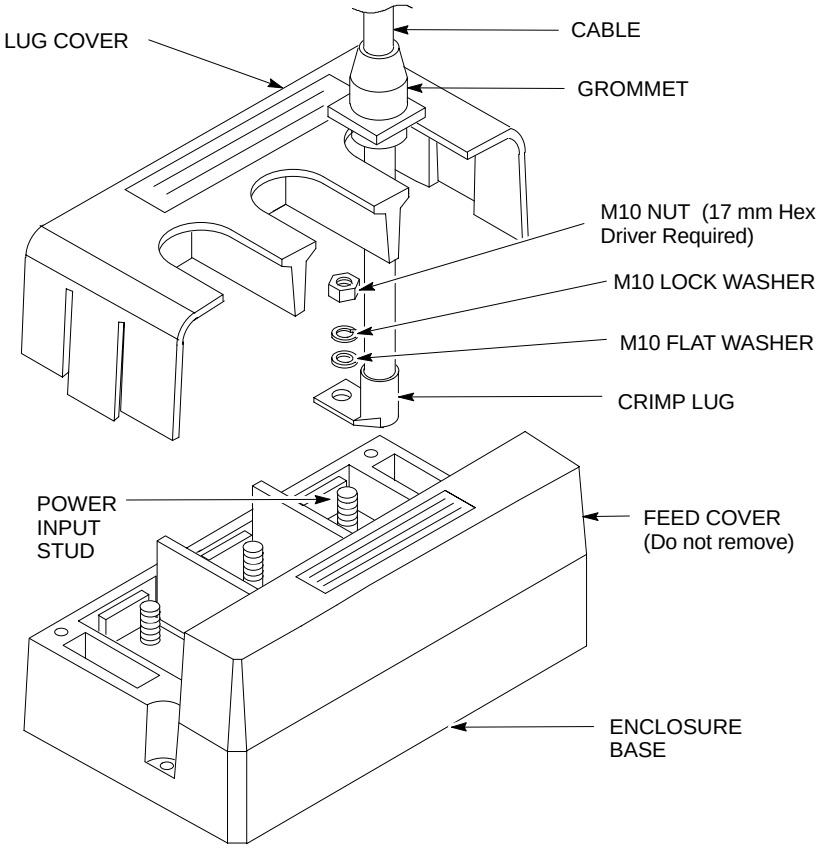

CAUTION

Route the cables through the rubber boot **BEFORE** crimping lug onto wire or damage to the boot can occur.

Installation Procedure

WARNING

- Do NOT wear a wrist strap when servicing the power supplies or power distribution cabling. Serious personal injury can result.

CAUTION

Before starting the procedure, ensure that the Power Cabinet main DC breakers are turned ”OFF”.

Follow the procedure in Table D-6 to install the DC power cables (refer to Figure D-6 and Figure 5-1).

DRAFT

Table D-6: Procedure to Install DC Power Cables	
Step	**Action**
1	Ensure that all three (3) main DC breakers in the Power Cabinet are ”OFF.”
2	Route the DC conduit from the I/O area of the Power Cabinet to the I/O area of the RF Cabinet. See Figure 5-1 for suggested location. **NOTE** This step is omitted if the DC conduit is already installed through the concrete pad.
3	Route the three (3) RED +27V feed power cables through the conduit and to the DC power connector in each cabinet through the rubber boot (see Figure 5-6) in the floor of the I/O area. **NOTE** The rubber boot is sized to seal either a #2/0 AWG or #4/0 AWG power cable, if a different sized cable is used other means may be required to ensure a good seal. A tie wrap or hose clamp must be used to ensure a good seal around the cables at the boot.
4	Route the three (3) BLACK –27V feed power cables through the conduit and to the DC power connector in each cabinet through the rubber boot (see Figure 5-6) in the floor of the I/O area. **NOTE** The rubber boot is sized to seal either a #2/0 AWG or #4/0 AWG power cable, if a different sized cable is used other means may be required to ensure a good seal. A tie wrap or hose clamp must be used to ensure a good seal around the cables at the boot.
5	At the RF Cabinet end of each DC power cable, strip insulation equal to the length of the crimping lug barrel, plus an additional 5 mm (0.2”). **! CAUTION** Route the cables through the rubber boot **BEFORE** crimping lug onto wire or damage to the boot can occur.
6	Trim the top (tapered end) of the cable grommet to allow the grommet to slide over the cable. Ensure that the grommet fits firmly around the cable.
7	Slide one cable grommet over each cable at the connector box.
8	Insert the cable into the barrel of the right angle crimp lug.
9	Crimp the lug to the cable.
10	Repeat steps 8–9 for the remaining power cable(s).
	NOTE Be sure to observe the polarity of each cable as you install the cables to the power input studs on the RF Cabinet.
11	Assemble the power cable to the studs as follows:
11a	– Place the cable lugs over the power input studs.
11b	– Place the M10 flat washer over the stud and on top of the lug.
11c	– Place the M10 lock washer over the stud and on top of the flat washer.

. . . continued on next page

DRAFT

Table D-6: Procedure to Install DC Power Cables	
Step	**Action**
11d	– Place the M10 nut over the stud and on top of the washer. **! CAUTION** Exceeding the torque limit may damage the stud.
11e	– Torque (tighten) nuts to 11–12 N–m (100–110 in–lbs).
12	Repeat steps 11a through 11e for the remaining power cables.
13	Position the lug cover over the base and lock the cover (it will snap) onto the enclosure base.
14	Slide each grommet down the cable and over the cable entry hole.
15	Repeat step 5 through step 14 for the Power Cabinet connections.
16	Verify that DC polarity between the RF and Power Cabinet is correct.

Checks

Check that all AC & DC breakers are turned OFF in both the SC 4812ET RF and Power Cabinet. The SC 614 Cabinet should have the DC buss bar (six breakers) closed, and the 100 amp breaker on the BBI open.

Check that the DC Power cables between the Power and RF Cabinets are connected with the correct polarity. There are two red and two black cables for the SC 4812ET and one red and one black cable for the SC 614 BTS

Confirm that split phase 240/120 AC supply is correctly connected to the AC Load Center input in the SC 4812ET Power Cabinet.

CAUTION

Failure to connect the proper AC feed will damage the surge protection module inside the AC Load Center.

Applying AC Power

For instructions on applying AC and DC power to the BTSs refer to the appropriate *BTS Optimization/ATP* manual.

DRAFT

Notes

D

DRAFT

MOTOROLA

Appendix E: SC 4812ET – SC 614/SC 614T Companion Frame Installation

This section includes...

Scope and Introduction 157
Tools Needed 158
Required documents 158
Preparing the SC 614T 158
Cabling the SC 4812ET RXDC to the SC 614 ERXDC 166

Tables

Table E-1: Side Cable Entry Hole Preparation 158
Table E-2: Removing the Duplexers (RX2, RX4 and RX6) . . . 160
Table E-3: Removing the Diversity RXDC from the SC 614 . . 163
Table E-4: Installing an ERXDC in the SC 614 Cabinet 165
Table E-5: Connecting SC 4812ET to SC 614 166

Figures

Figure E-1: Views of BTS Side Walls below Shroud 159
Figure E-2: Double–D Hole Punch 160
Figure E-3: I/O Cover 161
Figure E-4: Duplexer/Directional Coupler 162
Figure E-5: Cut–a–way view of SC 614 162
Figure E-6: RXDC/ERXDC Card Connections 163
Figure E-7: Location of RXDCs and ERXDCs 164
Figure E-8: Connecting SC 4812ET to SC 614 167
Figure E-9: Cabling of SC 4812ET to SC 614 BTS 168

E

Scope and Introduction

The purpose of this information is to provide instructions on how to install a SC 4812ET to SC 614/SC 614T (SC 614) companion frame configuration. This procedure assumes that the SC 614 has been previously installed, optimized, tested and is in operation.

This procedure details the steps necessary to convert the existing SC 614T site from a starter frame to an expansion frame (see Figure E-8). Interconnection ports are included in the SC 4812ET to SC 614 inter–cabinet cabling diagram (see Figure E-9).

. . . continued on next page

DRAFT

Several procedures are required and are outlined in Table E-1 through Table E-5.

Tools Needed

- 10 mm Nut Driver
- TORX T15 Screw Driver
- SMA torque wrench or 5/16” wrench if not available
- Type N torque wrench or 11/16” wrench if not available.

Required documents

- *SC 4812ET RF and Power Cabinet Installation* manual (Motorola part number 68P64114A22).
- *SC 4812ET RF Cabinet Optimization/ATP* manuals (Motorola part number 68P64114A23 and 68P64114A42).
- *SC 614T 2nd Carrier Installation* manual (Motorola part number 68P64114A07)
- *SC 614T 2nd Carrier Optimization/ATP* manual (Motorola part number 68P64113A61)
- *SC 614T Hardware Installation* manual (Motorola part number 6864113A47).

E

Preparing the SC 614T

Table E-1 describes the procedures to prepare the SC 614T BTS for side cable entry. Follow the procedure when new holes are required.

Side Cable Entry Hole Preparation

Table E-1: Side Cable Entry Hole Preparation

✓	Step	Action
	1	Determine the desired location for cable entry on the sides of the BTS below the side shrouds. Figure E-1 can be used as a guideline. If a different pattern for cable entry is desired, use a hole pattern that is more appropriate. **△ WARNING** Safety Glasses are required for the following steps.
	2	To punch the Double–D holes for the type N connectors on the antenna cables, first drill a pilot hole in the side wall of the BTS approximately 11 mm (7/16”) in diameter. Use the Double–D punch CGDS50748149 to punch the Double–D hole (see Figure E-2). Repeat as required.
	3	To punch the round hole for the ground cable, AC power cable, etc., use a standard electrician hole punch set. As with all tools, follow the safety instructions from the manufacturer of the tool. The hole required for the ground wire bushing supplied is 23 mm (7/8”).
	4	If necessary use a de–burring tool or sandpaper to remove any sharp burrs around the holes that were punched.

DRAFT

NOTE

- For your convenience the BTS is shipped with center punches in each of these locations
- Use of a hole saw is NOT recommended due to the variation of the diameter and quality of the resulting hole. A hole that is too big or oblong can result in a cable termination that won't seal.

Figure E-1: Views of BTS Side Walls below Shroud

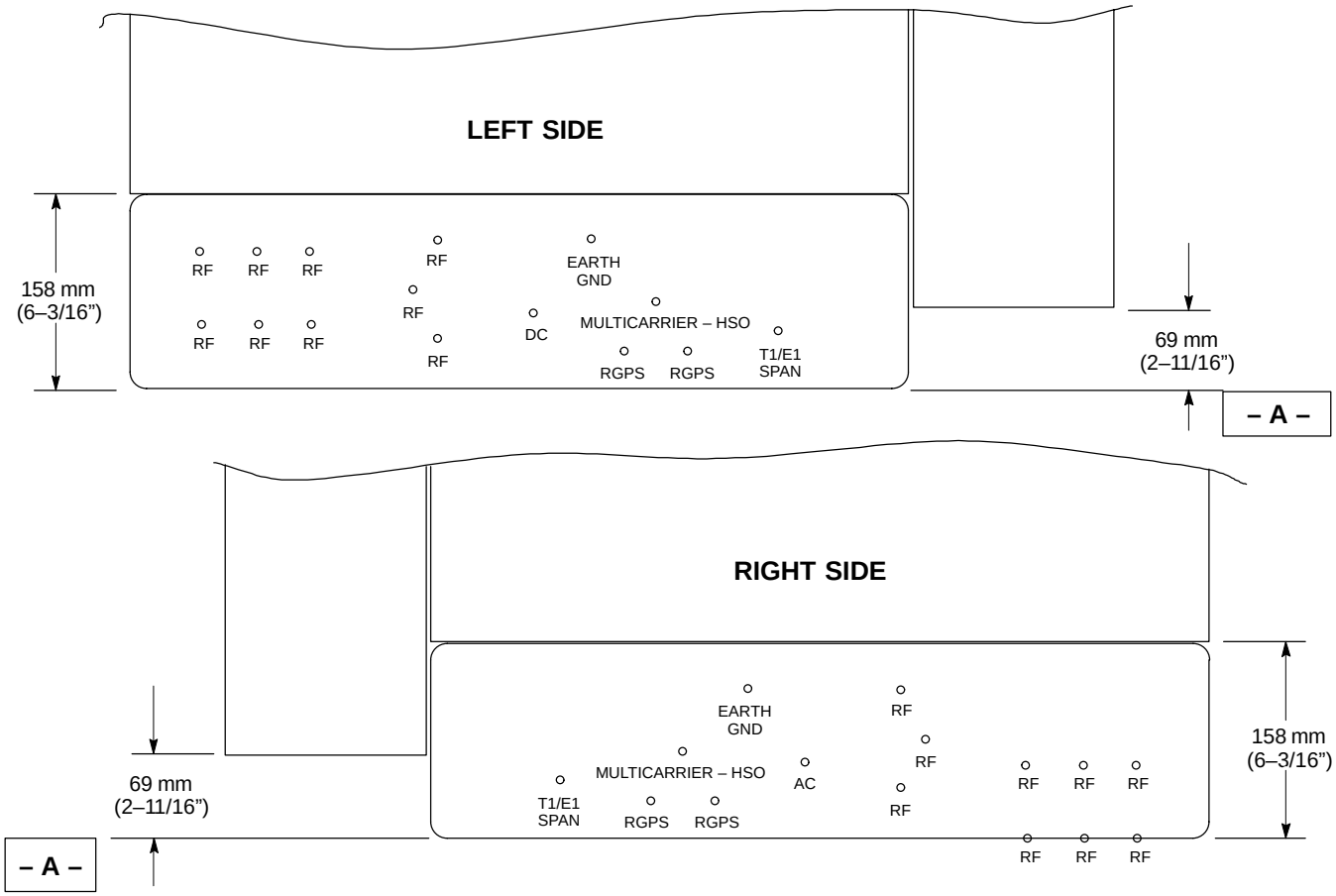

NOTE

- Cable entry hole locations are at the installers option. The diagrams shown here is only intended to be used as a guideline. Punch only entry holes as are applicable.
- "Datum A" represents the bottom of the BTS itself. The rubber pad and the bottom cover are below "Datum A".

. . . continued on next page

DRAFT

CAUTION

Care should be taken not to punch extra holes in the side wall of the BTS. Extra holes will compromise the weather sealed nature of the SC 614T BTS Cabinet.

Figure E-2: Double–D Hole Punch (Refer to Motorola Part Number #CGDS50748149)

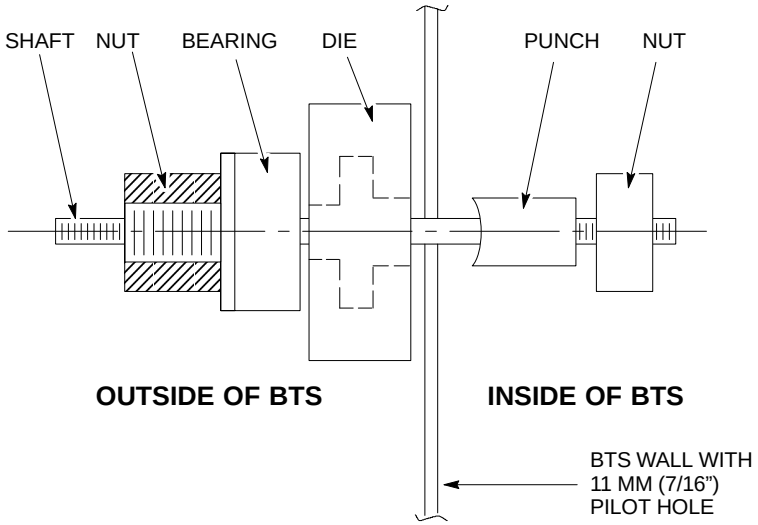

E

Removal Duplexers from the SC 614

Table E-2 details the removal of three duplexers from the SC 614.

Table E-2: Removing the Duplexers (RX2, RX4 and RX6) from the SC 614

✓	Step	Action
	1	Loosen the three (3) nuts that hold the I/O cover in place at the bottom of the BTS. Remove the access panel by sliding it up towards the ACLC and out of the BTS.
		NOTE The access panel is a two–piece panel; remove the left side first.
	2	Disconnect the RF jumper cable (Type–N connector) from the bottom of the three duplexers (RX2, RX4, and RX6).
	3	If the RFDS is installed, disconnect the two (2) SMA connectors from the RFL & FWD ports on the lower front of the duplexers (RX2, RX4, and RX6).
	4	Disconnect Type N connector from RX port on top of the duplexers (RX2, RX4, & RX6).
	5	Using a 10 mm nut driver, loosen six (6) M6 nuts that retain the bottom and top brackets that hold the duplexers. Slide the bottom and the top brackets forward and up, respectively, and carefully remove the deplexers.
		NOTE The duplexers are grounded to the Main Ground Bus with two (2) ground pins. Carefully lift the duplexers straight up until the these pins clear the MGB.

. . . continued on next page

DRAFT

Table E-2: Removing the Duplexers (RX2, RX4 and RX6) from the SC 614		
✓	**Step**	**Action**
	6	After removing the three (3) diversity duplexers (RX2, RX4 and RX6), slide the top and bottom brackets back to their original positions and torque the six (6) M6 nuts to 5 N–m (45 in–lbs)
	7	Install six Type N bulkhead connectors to the Main Ground Bar (MGB) in the holes for RXα2 IN, RXβ2 IN, RXγ2 IN, RXα1 OUT, RXβ1 OUT, and RXγ1 OUT (see Figure E-5). Tighten the hex nuts from the bottom of the MGB to 4 N–m (35 in–lbs).
	8	Install a DC block surge arrestor onto the Type–N bulkhead connectors. RXα1 OUT, RXβ1 OUT, and RXγ1 OUT. Torque to 4 N–m (35 in–lbs.).
	9	Install the BTS labels TX1/α1, TX2/β1 and TX3/γ1 over the TX1/RX1, TX2/RX3 and TX3/RX5 on the top duplexer mounting bracket respectively, and next to each corresponding port on the outside of the cabinet.
	10	If the RFDS is installed, tie wrap the cables disconneted from the RFL + FWD ports of the duplexers together and to the side at the cabinet.
	11	This completes the Duplexer removal from the SC 614.

Figure E-3: I/O Cover

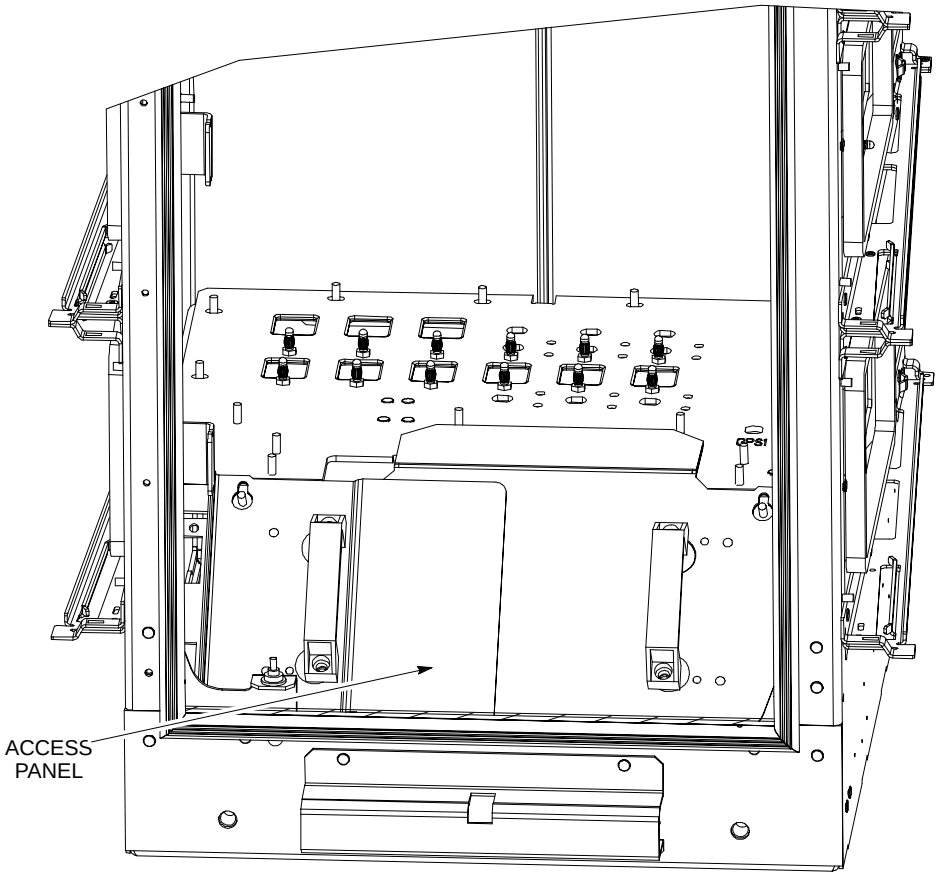

. . . continued on next page

DRAFT

Figure E-4: Duplexer/Directional Coupler

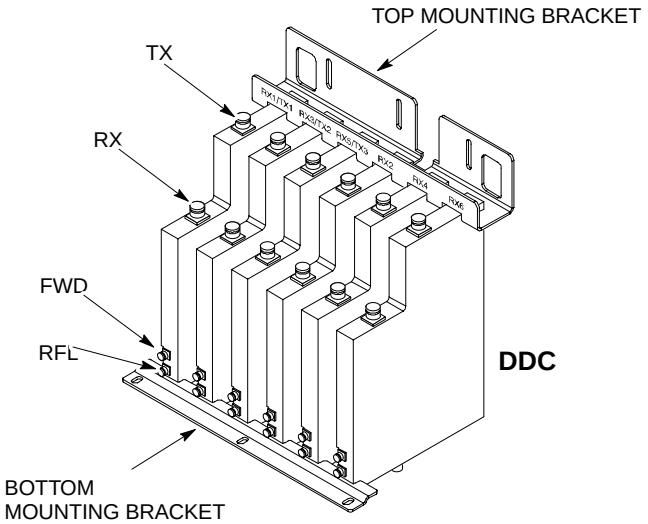

Figure E-5: Cut–a–way view of SC 614 (from the top looking down on Duplexers)

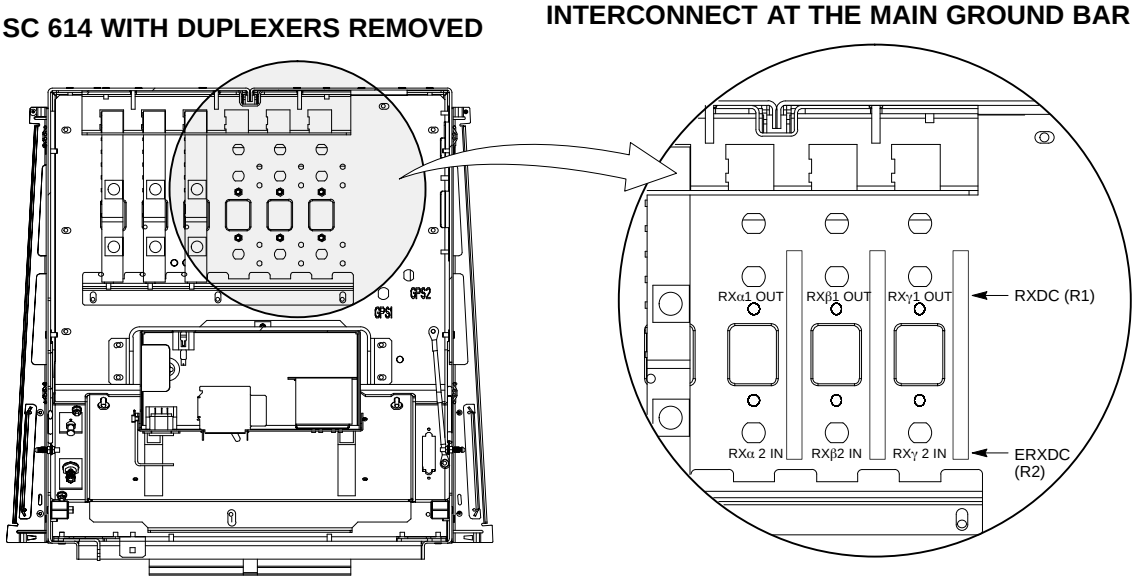

. . . continued on next page

DRAFT

Removing the Diversity RXDC (R2)

The procedure to physically remove the diversity RXDC from the SC 614 cabinet is described in Table E-3.

Table E-3: Removing the Diversity RXDC from the SC 614

✓	Step	Action
	1	Unplug the ganged connectors PL1 and PL2 from the Diversity RXDC (R2) in the BTS. (See Figure E-6 and Figure E-7).
	2	Disconnect the 8–pin and 14–pin connectors, P2 and P1, respectively.
	3	Using a T15 TORX screw driver, loosen the two (2) pan head screws (see Figure E-7) that retain the bracket holding the Diversity RXDC (R2) in the BTS. Slide the bracket up and remove the unit.

Figure E-6: RXDC/ERXDC Card Connections

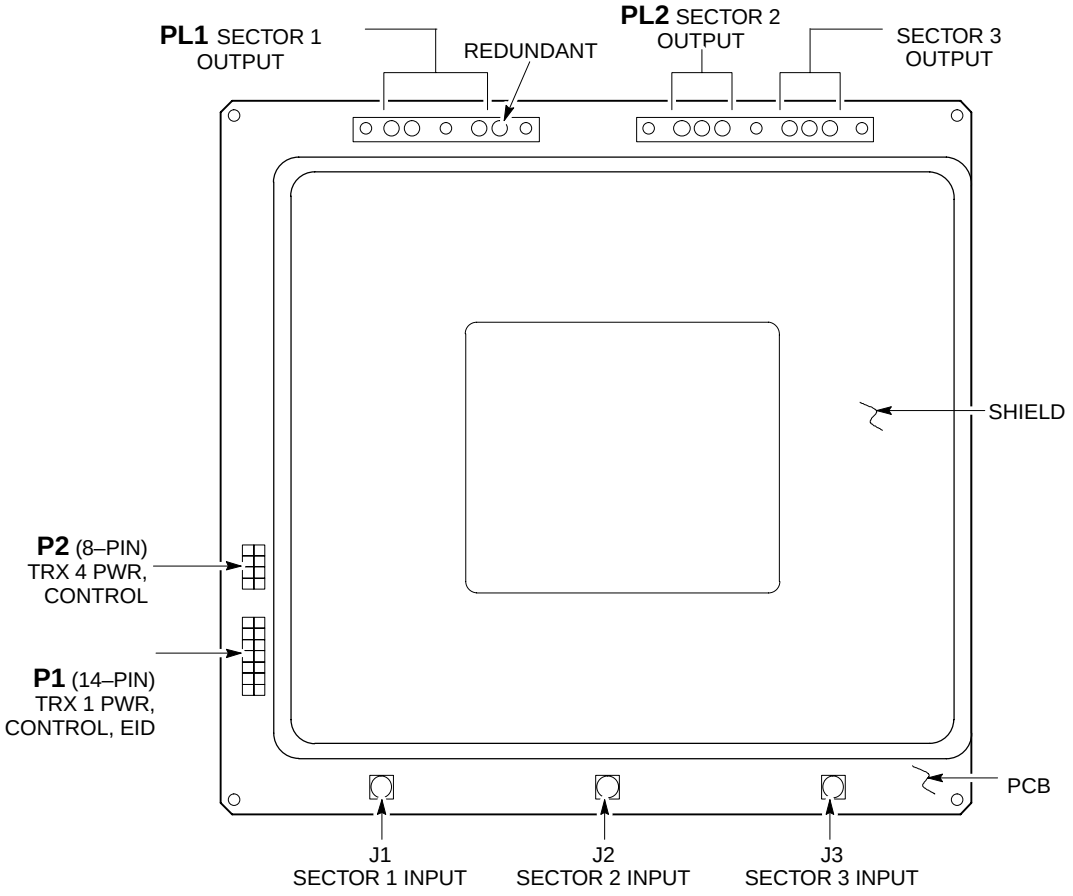

. . . continued on next page

DRAFT

Figure E-7: Location of RXDCs and ERXDCs

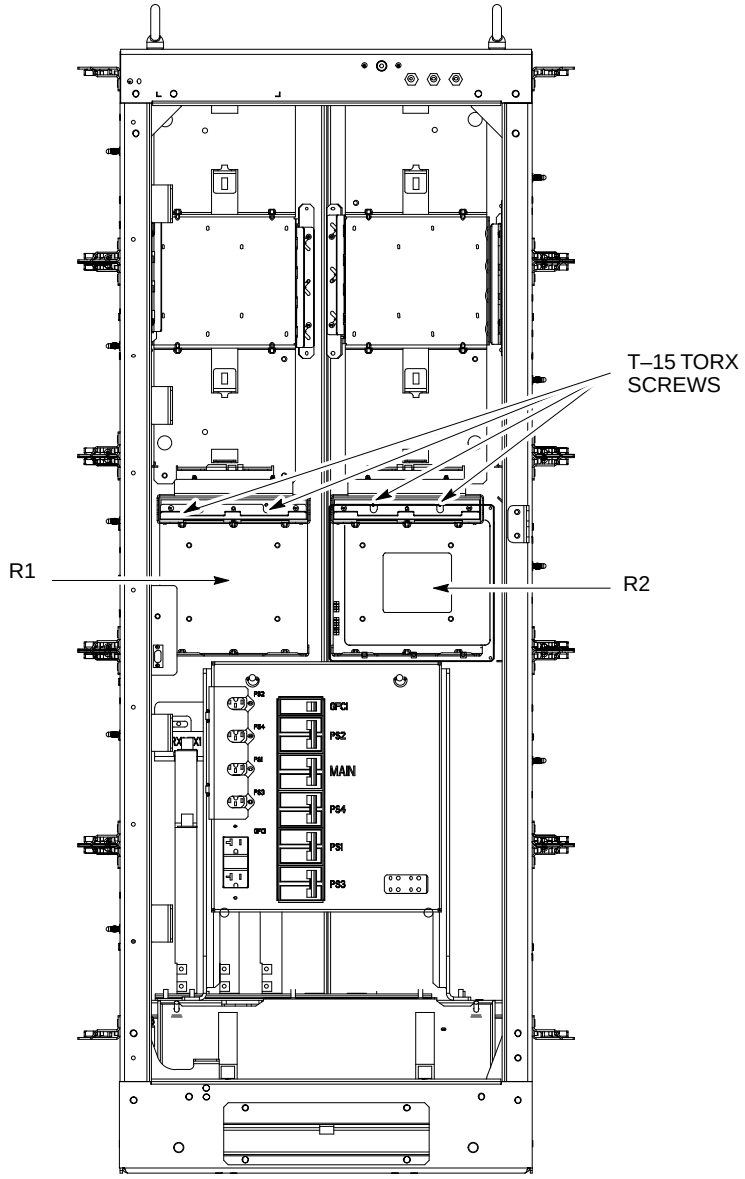

E

Installing an ERXDC in the SC 614

The procedure to physically install an RXDC in the SC 614 cabinet is described in Table E-4.

. . . continued on next page

DRAFT

Table E-4: Installing an ERXDC in the SC 614 Cabinet		
✓	**Step**	**Action**
	1	In the R2 location, slide the bracket up and install the ERXDC with the three SMA connectors along the bottom edge facing forward. Slide the bracket down over the ERXDC. Using a T15 TORX screw driver, torque the two (2) pan head screws to 2 N–m (16 in–lbs).
	2	Connect the SMA plug to the SMA jacks (J1, J2, and J3) on the ERXDC (see Figure E-6). Torque each connector to 1.0 N–m (9 in–lbs). Connect the Type N plug to the Type N bulkhead connectors on the MGB (J1 to RXα2 IN; J2 to RXβ2 IN; and J3 to RXγ2 IN). Torque each connector to 4 N–m (35 in–lbs).
	3	Connect the 8–pin and 14–pin connectors, P2 and P1, respectively.
	4	Plug the ganged connectors onto the ERXDC (R2).
	5	Connect the RF jumper cable to the bottom of the Type N bulkhead connectors (RXα2 IN; RXβ2 IN; and RXγ2 IN). Torque each connector to 4 N–m (35 in–lbs). Install the other end of the cable as covered in the *SC 614 Hardware Installation* manual.
	6	Install the BTS labels – RXα2 IN; RXβ2 IN; and RXγ2 IN next to each port on the outside of SC 614.
	7	Connect the jumper cables from the SC 614T RXα2 IN (RX2), RXβ2 IN (RX4), and RXγ2 IN (RX6) to the SC 4812ET RF Expansion Ports labelled 1A, 2A, and 3A, respectively.

DRAFT

Cabling the SC 4812ET to the SC 614

The procedure to physically cable the RXDC in the SC 614 is described in Table E-5.

Table E-5: Connecting SC 4812ET to SC 614

✓	Step	Action
	1	Unplug the ganged connectors PL1 and PL2 from the RXDC (R1).
	2	Disconnect the SMB plugs from the J1300A port (main RX) and J1300B port (diversity RX) on each TRX. Snip off the tie wrap that hold the cable together.
	3	Remove the two cables from the cabinet.
	4	Plug the ganged connectors (included in the Expansion Cabinet installation hardware) into the RXDC (R1).
	5	Connect the SMB plugs on cables with the ganged connectors to the main ports (J1300A) on TRX1, TRX4, TRX2, and TRX3 (cables are labelled with appropriate TRX). Dress these cables in the same fashion as the previous cable assemblies.
	6	Connect the Type–N plugs on the cables labelled 2–TRX1, 2–TRX2 and 2–TRX3 to the Type–N bulkhead connectors on the Main Ground Bar (MGB) in locations RXα1 OUT; RXβ1 OUT; and RXγ1 OUT, respectively. Torque each connector to 4 N–m (35 in–lbs).
	7	Install the RF jumper cable from the Type–N bulkhead connectors on the MGB as covered in the *SC 614T Hardware Installation* manual (68P64113A47).
	8	Install the BTS labels – RXα1 OUT; RXβ1 OUT; and RXγ1 OUT next to each port on the outside of the BTS.
	9	Connect the jumper cables from the SC 614T RXα1 OUT, RXβ1 OUT, and RXγ1 OUT to the SC 4812ET RF Expansion Ports labelled 1B, 2B, and 3B, respectively.

E

DRAFT

Figure E-8: Connecting SC 4812ET to SC 614

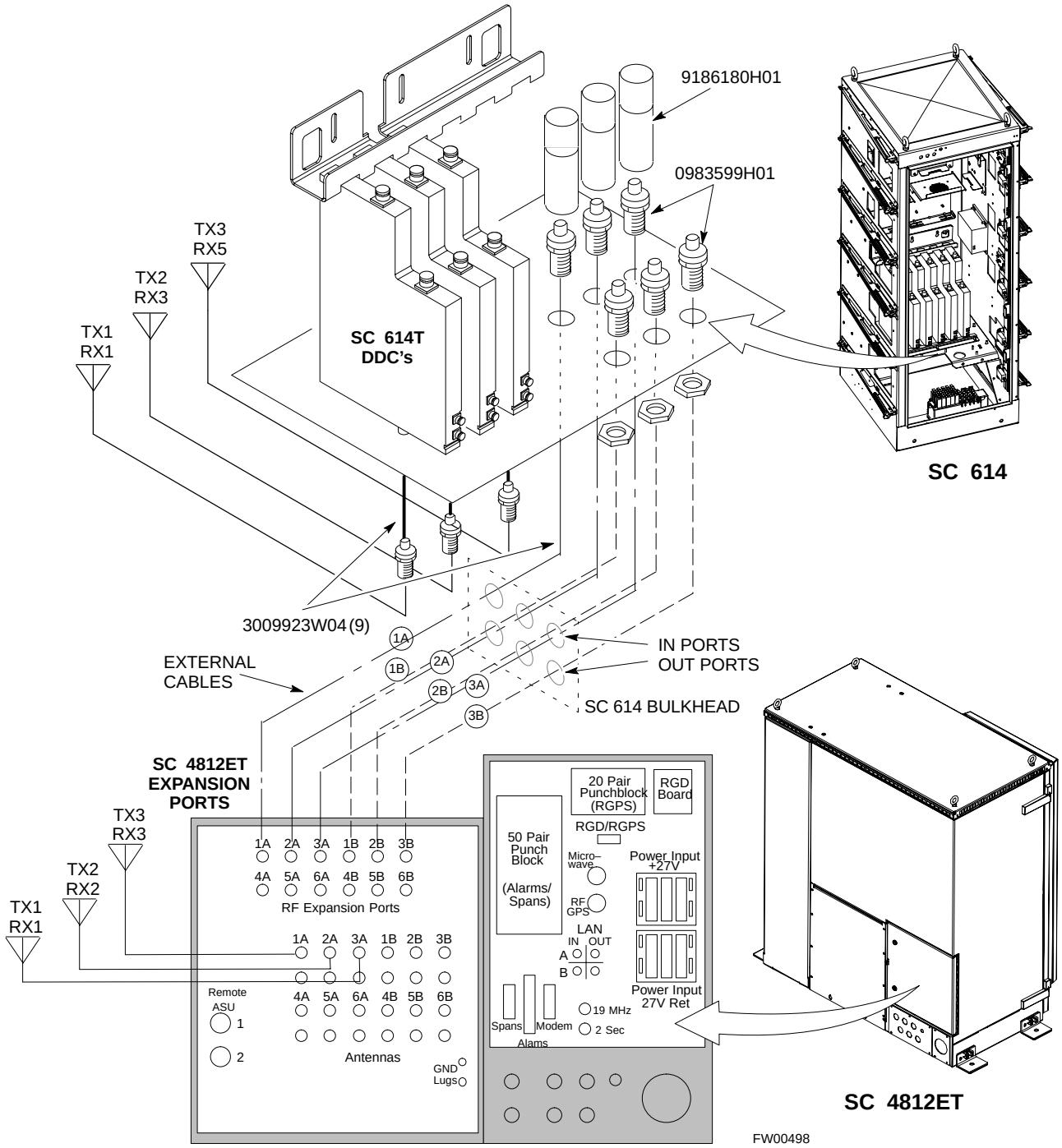

E

DRAFT

Figure E-9: Cabling of SC 4812ET to SC 614 BTS

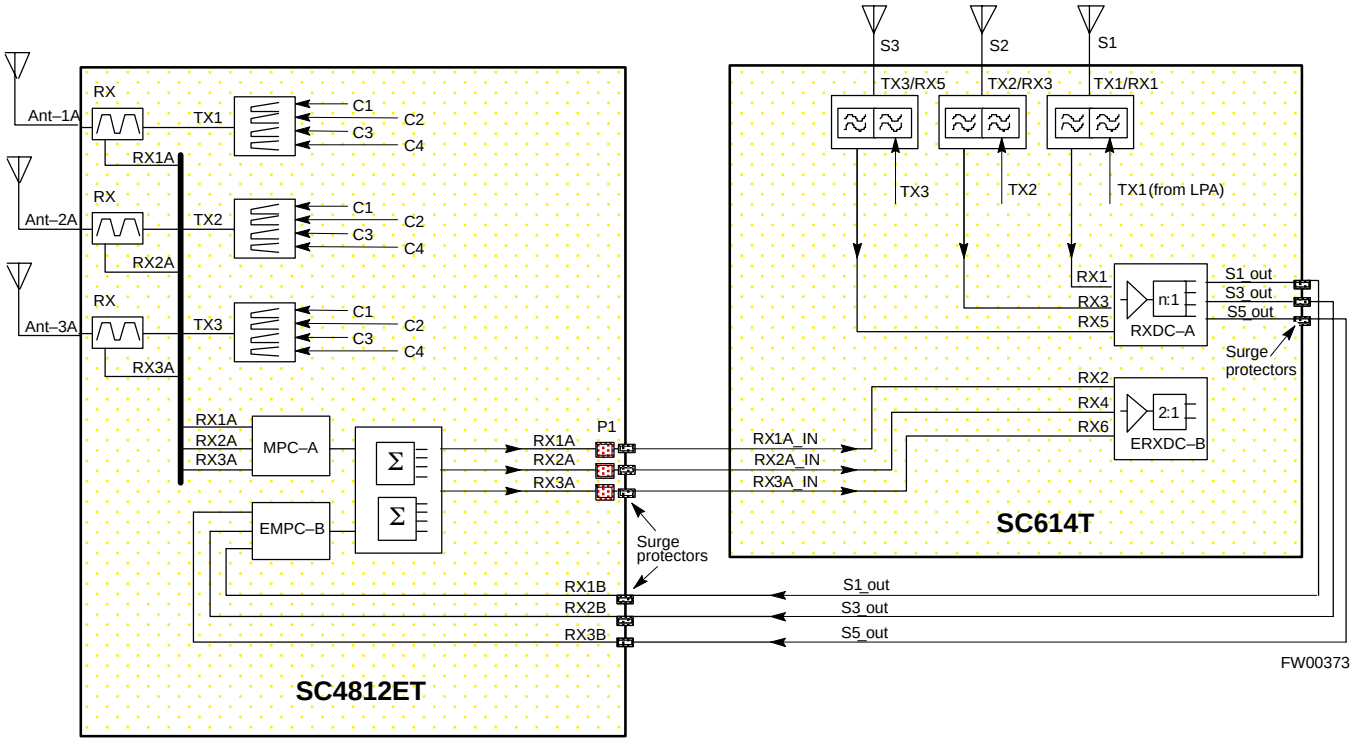

E

DRAFT

Appendix F: SC 4812ET to SC 4812ET DC Power Sharing and Frame Installation

This section includes...

Scope and Introduction 169
Configuration 170
DC Power Interconnect to RF Cabinet 171
Cabling SC 4812ET RF Cabinet to SC 4812ET RF Cabinet . . . 175
Applying AC Power 175

Tables

Table F-1: Battery/Rectifier Configuration 171
Table F-2: Wire, Lug, and Die Table 172
Table F-3: Procedure to Install DC Power Cables 173
Table F-4: Procedure to Interconnect RF Cabinets 175

Figures

Figure F-1: SC4812ET to SC 4812ET DC Power Sharing 170
Figure F-2: Connecting Power Cables 172

F

Scope and Introduction

The purpose of this appendix is to provide instruction on how to connect two SC 4812ET cabinets to a single SC 4812ET Power Cabinet. Please note that one fully loaded Power Cabinet (6 rectifiers) is rated only at 300A DC. As a result, only a total 9 Sector–carriers of capacity can be supported in the two “co–located” RF Cabinets (e.g. one 3–sector, 1–carrier cabinet and one 3–sector, 2–carrier cabinet), or inadvertently tripping the circuit breaker could result.

The SC 4812ET Power cabinet provides 27 Volts DC power to an associated SC 4812ET RF Cabinet. For sites where the SC 4812ET will be co–located with an SC 4812ET, it can be advantageous for space and other considerations to be able to use the SC 4812ET Power Cabinet as a DC source for the second RF Cabinet.

This section describes how to install and configure the equipment to provide this functionality.

. . . continued on next page

DRAFT

Configuration

The SC 4812ET Power Cabinet consists of a rectifier system with up to six (6) 27 Volt DC, 70 Amp modules, depending on the number of carriers it is required to support in the SC 4812ET RF Cabinet.

Connections to the SC 4812ET are made via six (6) #2/0 AWG superflex (three red and three black) cables, to allow redundancy on the DC connections, and to minimize voltage drop. Please note that when two RF Cabinets are connected to one Power Cabinet, the redundancy of the connections must be sacrificed, the effects to voltage drop and cabinet spacing are shown in Figure F-1.

Up to 12 battery strings can be provided in the Power Cabinet to support up to four (4) hours of battery backup in a fully equipped SC 4812ET RF cabinet.

For the purpose of connecting two (2) RF Cabinets to the Power Cabinet, it is necessary to only use four (4) #2/0 AWG superflex (two red and two black) cables to connect to the 2–carrier RF Cabinets, and two (2) #2/0 AWG superflex (one red and one black) cables to connect to the 1–carrier RF Cabinet.

F

Figure F-1: SC4812ET to SC 4812ET Base Station DC Power Sharing

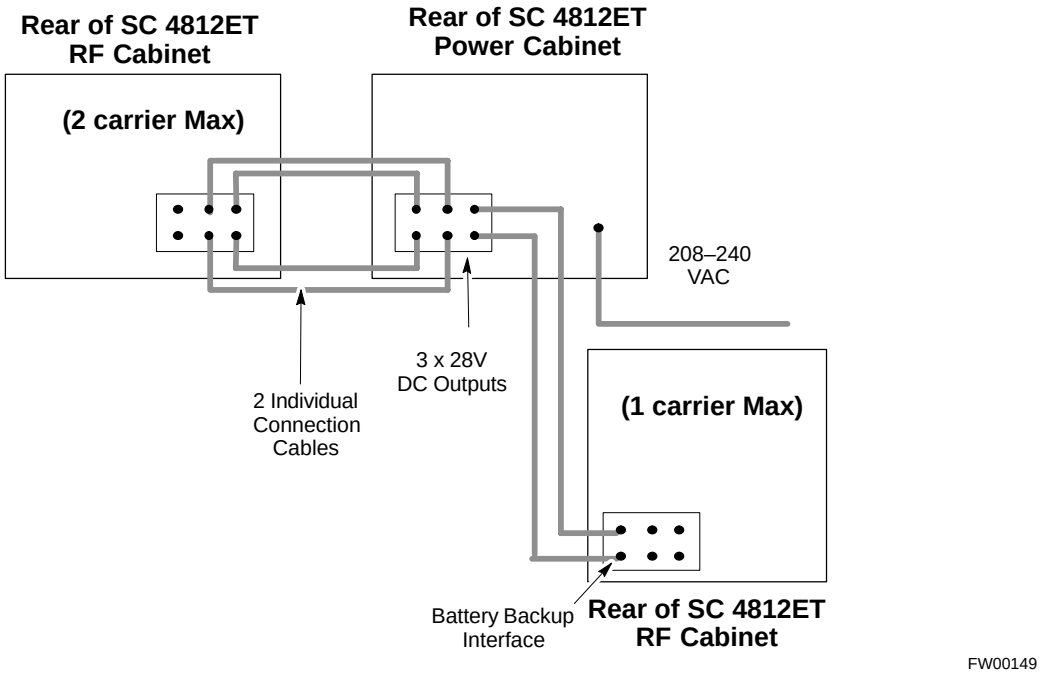

DRAFT

IMPORTANT

Due to the reduction in load capacity of the power cabinet, the battery/rectifier configuration and number of sector–carriers that can be supported in the SC 4812ET RF Cabinet are changed compared to the standard SC 4812ET documentation. Table G-1 details the recommended configurations when co–locating two 4812ET RF Cabinets.

Table F-1: Battery/Rectifier Configuration

Number of Rectifier Modules	Number of Battery Strings	SC 4812ET #1 Sector–Carriers	SC 4812ET #2 Sector–Carriers	System Battery Backup Time (hours)
5	10	3	3	4
6	12	6	3	4

DC Power Interconnect to RF Cabinet

The objective of this procedure is to connect the DC power cabling to the RF Cabinet from the Power Cabinet.

WARNING

ALL power must be removed from the system until all connections are made to both the RF and Power Cabinet.

Ensure that all breakers in both the RF and Power Cabinet are turned in the "**OFF**" (opened) position.

Tools and equipment required

The following tools are required to install the power cables:

- Thomas & Betts TBM14 Hydraulic crimping tool with color keyed crimp die set (or equivalent). Contact Thomas & Betts for information concerning equivalent tools.
- 17 mm socket
- Torque wrench capable of 110 in–lbs

DRAFT

Table F-2: Wire, Lug, and Die Table					
Motorola Part Number for Lugs	**Wire Size**				**Color and Die Code**
	AWG	**Metric (mm)**	**Welding (Superflex)**	**Circular Mills Area**	
CGDS256306951514	2/0 AWG	60–70	1/0	133,400	BLACK 45
CGDS256306951539	3/0 AWG	85–95	2/0	167,800	ORANGE 50
CGDS256306951515	4/0 AWG	100–107	3/0	211,600	PURPLE 54
CGDS256306951540	N/A	N/A	4/0	250,000	YELLOW 62

Power input connections

Figure F-2 shows how the power cable is connected to the RF and Power Cabinet. Figure 5-1 show the location of the DC power connector in the RF Cabinet and Power Cabinet.

Figure F-2: Connecting Power Cables

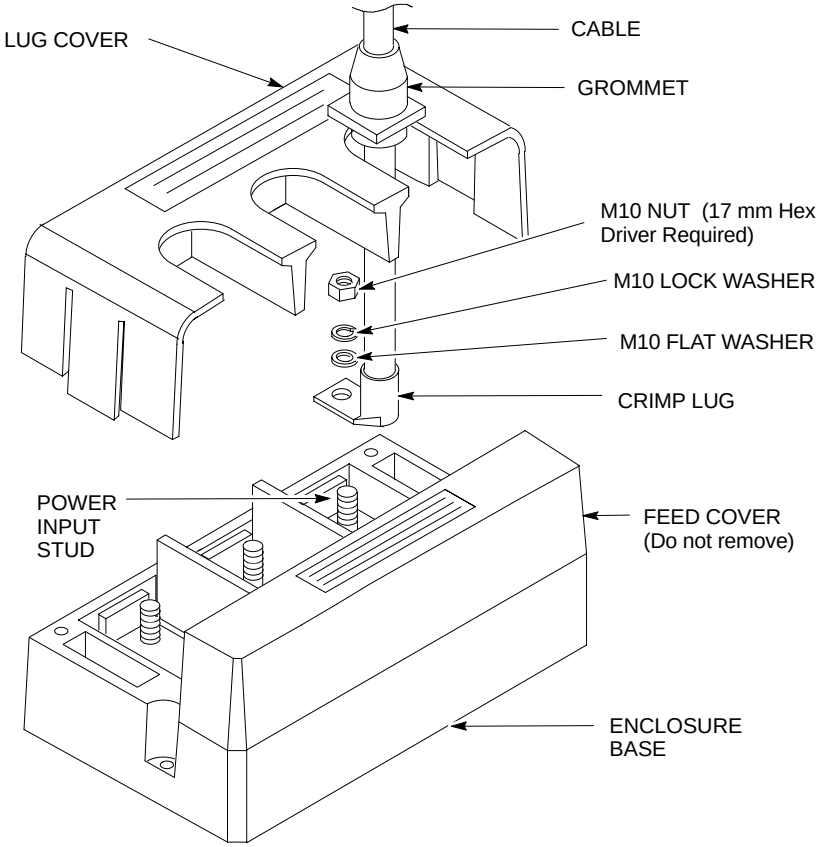

CAUTION

Route the cables through the rubber boot **BEFORE** crimping lug onto wire or damage to the boot can occur.

DRAFT

Installation Procedure

WARNING

Do NOT wear a wrist strap when servicing the power supplies or power distribution cabling. Serious personal injury can result.

CAUTION

Before starting the procedure, ensure that the Power Cabinet main DC breakers are turned ”OFF”.

Follow the procedure in Table F-3 to install the DC power cables (refer to Figure F-1, Figure F-2 and Figure 5-1).

Table F-3: Procedure to Install DC Power Cables

Step	Action
1	Ensure that all three (3) main DC breakers in the Power Cabinet are ”OFF.”
2	Route the DC conduit from the I/O area of the Power Cabinet to the I/O area of the RF Cabinet. See Figure 5-1 for suggested location. **NOTE** This step is omitted if the DC conduit is already installed through the concrete pad.
3	Route the three (3) RED +27V feed power cables through the conduit and to the DC power connector in each cabinet through the rubber boot (see Figure 5-6) in the floor of the I/O area. **NOTE** The rubber boot is sized to seal either a #2/0 AWG or #4/0 AWG power cable, if a different sized cable is used other means may be required to ensure a good seal. A tie wrap or hose clamp must be used to ensure a good seal around the cables at the boot.
4	Route the three (3) BLACK –27V feed power cables through the conduit and to the DC power connector in each cabinet through the rubber boot (see Figure 5-6) in the floor of the I/O area. **NOTE** The rubber boot is sized to seal either a #2/0 AWG or #4/0 AWG power cable, if a different sized cable is used other means may be required to ensure a good seal. A tie wrap or hose clamp must be used to ensure a good seal around the cables at the boot.
5	At the RF Cabinet end of each DC power cable, strip insulation equal to the length of the crimping lug barrel, plus an additional 5 mm (0.2”). **! CAUTION** Route the cables through the rubber boot **BEFORE** crimping lug onto wire or damage to the boot can occur.
6	Trim the top (tapered end) of the cable grommet to allow the grommet to slide over the cable. Ensure that the grommet fits firmly around the cable.
7	Slide one cable grommet over each cable at the connector box.

. . . continued on next page

DRAFT

Table F-3: Procedure to Install DC Power Cables	
Step	**Action**
8	Insert the cable into the barrel of the right angle crimp lug.
9	Crimp the lug to the cable.
10	Repeat steps 8–9 for the remaining power cable(s).
	NOTE Be sure to observe the polarity of each cable as you install the cables to the power input studs on the RF Cabinet.
11	Assemble the power cable to the studs as follows:
11a	– Place the cable lugs over the power input studs.
11b	– Place the M10 flat washer over the stud and on top of the lug.
11c	– Place the M10 lock washer over the stud and on top of the flat washer.
11d	– Place the M10 nut over the stud and on top of the washer.
	! CAUTION Exceeding the torque limit may damage the stud.
11e	– Torque (tighten) nuts to 11–12 N–m (100–110 in–lbs).
12	Repeat steps 11a through 11e for the remaining power cables.
13	Position the lug cover over the base and lock the cover (it will snap) onto the enclosure base.
14	Slide each grommet down the cable and over the cable entry hole.
15	Repeat step 5 through step 14 for the Power Cabinet connections.
16	Verify that DC polarity between the RF and Power Cabinet is correct.

F

Checks

Check that all AC & DC breakers are turned OFF in both the SC 4812ET RF and Power Cabinet.

Check that the DC Power cables between the Power and RF Cabinets are connected with the correct polarity.

Confirm that split phase 240/120 AC supply is correctly connected to the AC Load Center input in the SC 4812ET Power Cabinet.

CAUTION

Failure to connect the proper AC feed will damage the surge protection module inside the AC Load Center.

DRAFT

Cabling SC 4812ET RF Cabinet to SC 4812ET RF Cabinet

The objective of this procedure is to interconnect the cables between two SC 4812ET RF cabinets.

CAUTION

Before starting the procedure, ensure that the Power Cabinet main DC breakers are turned “OFF”.

Tools and equipment required:

Refer to Chapter 5 “Cabinet Cabling” for the tools requirement to interconnect the cables between two RF cabinets.

Table F-4: Procedure to Interconnect RF Cabinets

Step	Action
1	Connect the T1 line to each 24–position connector located in the DC I/O area of each RF cabinet. **NOTE** Each RF cabinet requires a separate T1 line and should not be daisy–chained.
2	Connect N connector of the RF GPS coaxial cable to DC I/O area of each RF cabinet. Refer to Chapter 5 and Appendix H for connecting RF GPS cables. **NOTE** Each RF cabinet requires a separate RF GPS head and the coaxial cables should not be daisy–chained.
3	Connecting the Alarm cable from a RF cabinet to Power cabinet. Refer to Chapter 5 for connecting the alarm cable. **NOTE** Only one (1) alarm cable is needed from one (1) of the RF cabinets to Power cabinet.
4	Connect RF coaxial cables according to the configuration of the ET system. Refer to Chapter 2 “Site Preparation” for ET system configurations and Chapter 5 for RF cabling.
5	Connect RF coaxial cables between two RF cabinets. Refer to Appendix G for connecting SC 4812ET to SC 4812ET Companion Frame procedures.

Applying AC Power

For instructions on applying AC and DC power to the BTSs refer to the appropriate *BTS Optimization/ATP* manual.

DRAFT

Notes

DRAFT

Appendix G: SC 4812ET – SC 4812ET Companion Frame Installation

This section includes...

Scope and Introduction 177
Tools Needed 177
Required documents 177
Installing an EMPC in a SC 4812ET RF Starter Frame 178
Connecting an SC 4812ET Starter BTS to an Companion Frame 178

Tables

Table G-1: Installing an EMPC in the SC 4812ET Starter Frame 178
Table G-2: Connecting 4812ET RF Starter to RF Companion . 178

Figures

Figure G-1: RX Expansion Cabling of 4812ET to 4812ET BTS 179

Scope and Introduction

The purpose of this information is to provide instructions on how to install a SC 4812ET to SC 4812ET companion frame configuration. This procedure assumes that the SC 4812ET has been previously installed, optimized, tested and is in operation.

Interconnection ports are included in the SC 4812ET to SC 4812ET inter–cabinet cabling diagram (see Figure G-1).

G

Tools Needed

- 10 mm Nut Driver
- TORX T15 Screw Driver
- SMA torque wrench or 5/16” wrench if not available
- Type N torque wrench or 11/16” wrench if not available.

Required documents

- *SC 4812ET RF and Power Cabinet Installation* manual (Motorola part number 68P64114A22).
- *SC 4812ET RF Cabinet Optimization/ATP* manuals (Motorola part number 68P64114A23 and 68P64114A42).
- *SC 614T 2nd Carrier Optimization/ATP* manual (Motorola part number 68P64113A61)

DRAFT

Installing an EMPC in a SC 4812ET RF Starter Frame

Table G-1 descripts the procedure for installing an EMPC card needed when connecting a SC 4812ET expansion frame.

Table G-1: Installing an EMPC in the SC 4812ET Starter Frame

Step	Action
1	Locate the MPC–B card in the SC 4812ET RF starter frame to be removed.
2	Disconnect coaxial cables connecting to the MPC using a 5/16” wrench.
3	Slide the MPC–B card out and replace it with the EMPC–B card. Reattach coaxial cable to their respective location using a 5/16” wrench to 10 in/lbs.

Connecting an SC 4812ET RF Starter Frame to an SC 4812ET RF Companion Frame

The procedure to physically connect the cables between the SC 4812ET RF starter frame to SC 4812ET RF companion frame is shown in Table G-2

Table G-2: Connecting an SC 4812ET RF Starter Frame to an SC 4812ET RF Companion Frame

Step	Action
1	Connect T1 line to each 24–position modem connector located in the DC I/O area of each RF cabinet.
2	Connect N connector of the RF GPS coaxial cable to DC I/O area of each RF cabinet. Refer to Chapter 5 (Table 5-19 and Table 5-20) and Appendix H for connecting RF GP S cables.
3	Refer to Chapter 5 (Table 5-6, Table 5-7 and Table 5-8) for connecting the Alarm cable.
4	Connect the RF coaxial cables according to the configuration of ET system. Refer to Chapter 2 (Table 2-3) for ET system configurations and Chapter 5 (Table 5-11 and Table 5-12) for the RF cabling.
5	Connect RF coaxial cables between two (2) RF cabinets. Refer to Figure G-1 for connecting the SC 4812ET Starter Frame to the SC 4812ET Companion Frame.

DRAFT

Figure G-1: RX Expansion Cabling of SC 4812ET to SC 4812ET BTS

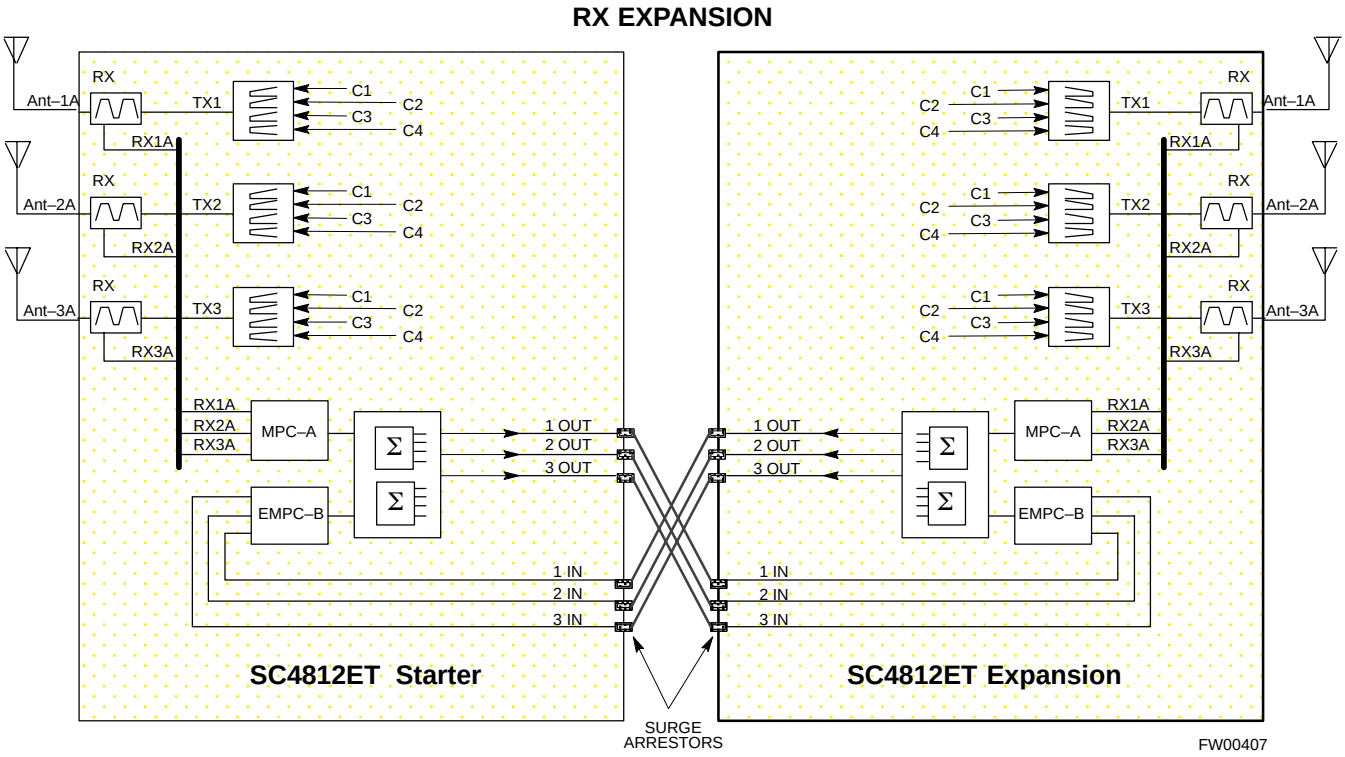

G

Notes

DRAFT

Appendix H: Installing RF GPS

This section includes...

Introduction 181
Installation Procedure 182
RF GPS Mounting Considerations 184

Tables

Table H-1: Installing the RF GPS 182
Table H-2: Mounting Considerations 184

Figures

Figure H-1: GPS Installation and Parts 183

Introduction

The objective of this procedure is to install the BTS RF Global Positioning System Receiver (RF GPS) antenna.

The coaxial cable connecting from the BTS to RF GPS head is a 50 ft., 1/2” superflex cable with N connectors.

H

DRAFT

Installation Procedure

Table H-1 lists the step of installing the RF GPS system.

Table H-1: Installing the RF GPS

Step	Action
1	Determine the mounting location (see RF GPS Mounting Considerations in this chapter).
2	Install the mounting kit at the RF GPS location of choice. Use the appropriate mounting bolts for mounting surface. **△ WARNING** The roof structure on which the mounting pole is attached should be verified by a qualified structural engineer for the weight of the RF GPS engine and mounting hardware or under adverse conditions for the installation area **! CAUTION** Mounting the RF GPS antenna and hardware to an inadequate roof surface and/or using inadequate installation methods can result in serious injury.
3	Attach the RF GPS head assembly to the post mounting assembly and secure the assembly to the assembly to the Mounting kit using the screws and nuts supplied (see Figure H-1).
4	Attach the Grounding Kit to the mounting pole.
5	Connect one (1) N connector of the 50–feet superflex cable to the N jack of the RF GPS antenna cable and route the other end of the cable down to the RF cabinet.
6	Install the cable into the DC I/O area through the conduit I/O plate and via rubber I/O boot. The RF GPS I/O connection for the cable is listed in Chapter 5.

DRAFT

Figure H-1: GPS Installation and Parts

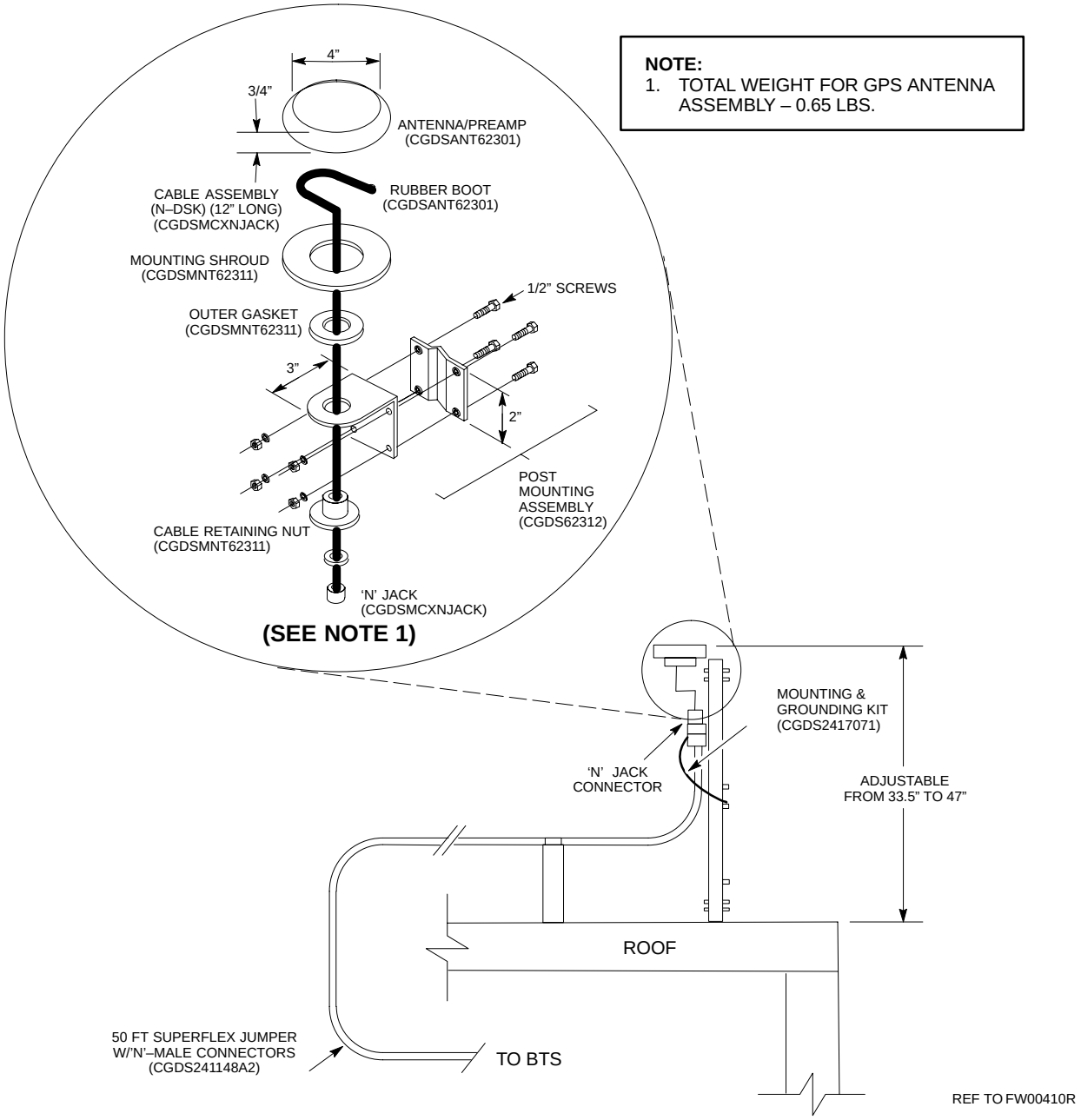

H

DRAFT

RF GPS Mounting Considerations

The RF GPS Head requires specific mounting considerations in order to properly observe the GPS satellites.

Table H-2: Mounting Considerations

✓		Consideration
	1	The mounting pipe for the RF GSP Head should be mounted vertically with less than five (5) degrees of tilt.
	2	The RF GPS Head requires a clear view of the sky, preferably to within ten (10) degrees of the horizon in all directions. The less sky that can be observed the fewer the number of potential satellites that can be tracked resulting in poorer RF GPS performance.
	3	For general operation, the RF GPS Head needs to be able to continuously track signals from at least four (4) GPS satellites. It is theoretically possible to operate the BTS with only one (1) GPS satellite visible, however, operating in this mode is not recommended and requires an accurate site survey.
	4	Place the RF GPS Head where RF obstructions of the sky are minized. The “sky” includes everything to within ten (10) degrees of the horizon in all directions. RF obstructions include buildings, towers, snow, foliage and debris.
	5	Separate the RF GPS Head from other radiating sources. Excessive RF energy can degrade the RF GPS Head’s ability to observe the GPS satellites. The RF GPS Head receives on the GPS L1 frequency of 1575.42 MHz and has filters incorporated within to minimize the effects of potential RF interference, however, strong radiants can overwhelm the filters, thus degrading the units reception capability.
	6	The RF GPS Head is rated for ambient air temperatures from –40 degrees C to + 50 degrees C, and has ratings for humidity, shock, waterproof, UV light resistance, vibrations, salt, fog, ESD, EMI, and altitude.
	7	If the overall length from the RF GPS Head to the BTS is greater than 50 feet, the cable style and length should be determined by the site configurations. The maximum loss should be less than 4.5 dBm @ 1575 MHz for all cabling and connections between the GPS Head and the RF cabinet.

NOTE

A 1/2” cable “pigtail” should always be used to exit the cabinet before transitioning to a larger cable. This will ensure a proper seal on the rubber I/O boot. It is suggested that the supplier cable be cut to the desired length to achieve this.

DRAFT

Appendix I: Minimum CSU Requirements for SC 4812ET BTS

This section includes...

CSU Requirements 185

Tables

Table G-1: Network Interface (8–pin RJ48C Connector) 178
Table I-2: Terminal Interface (8–pin RJ48C Connector) 187
Table I-2: Power Connector 187

CSU Requirements

The FCC requires Part 68 compliance on any chosen unit must be tested as part of the whole system, including cabling and punch block external interface. The user is responsible for this certification on any unit other than the Motorola supplied CSU.

The following is a list of minimum CSU requirements listed for both North American and International installations.

Operating Temperature Range:

–20°C to +60°C (the temperature seen inside the BTS range from –10°C to +57°C)

Cold Start:

The CSU must be able to withstand a “cold start” from –40°C without damage.

Physical Dimensions:

The standard 19” rack, 1–5 rack units high. The CSU may not extend greater than 2.5” in front of the option mounting rails.

Power:

Must operate from 21V to 30V (27V nominal)

Power (Maximum):

Less than 100W for option shelf equipped with all necessary CSU equipment. There are a total of three (3) breakers (10A each for options. The total current pulled from all three (3) breakers cannot exceed 15A.

DRAFT

T1 Span Requirements:

- Nominal Line Rate: 1.544 Mbps
- Line Impedance: 100 Ohms
- Line Code: AMI or B8ZS
- Framing Format: SF or ESF per ANSI T1.403, ITU–T G.704

Terminal Interface:

- Shorthaul: ANSI T1.102, ITU–T G.703
- Input: DSX–1 to –10 dB
- Output: DSX–1 with equalization up to 655 feet.

Network Interface:

- Longhaul: ANSI T1.403, ITU–T G.703
- Input: DSX–1 to –27.5 dB
- Output: Per ANSI T1.403 with line build–out to 15 dB.

Lightning Protection:

Withstands lightning surges defined per FCC Part 68 and recovers (see note below)

NOTE

Part 68 compliance on any chosen unit must be tested as part of the whole system, including cabling and punch block external interface. The user is responsible for this certification on any unit other than the Motorola supplied CSU.

Regulatory – Domestic USA:

- FCC Compliance: Part 68, Part 15, Class B (see note above)
- Safety: UL1950: For a CSU external to the SC 4812ET, the requirement is to be an approved CSU, with testing performance by an NRTL (e.g. Underwriters Laboratories, CSA, ETL). For a CSU which is to be fitted inside the SC 4812ET, **ONLY** UL listing is acceptable.

Recommended:

Compliance to the requirements of Bellcore GR–1089.

E1 Span Requirements:

- Nominal Line Rate: 2.048 Mbps
- Line Code: AMI or HDB3
- Framing Format: Per ITU–T G.704

Terminal Interface:

- Line Impedance: 120 Ohms
- Compliance: Per ITU–T G.703

DRAFT

Network Interface:

- Line Impedance: 120 Ohms (75 Ohms may require external adapter)
- Compliance: Per ITU–T G.703

Regulatory – International:

Safety: For a CSU external to the SC 4812ET, the requirement is to be an certified CSU, with testing performance by a National Certification Body (NCB) participating in the CB scheme under IEC60950.

Additional compliance requirements unique to E1 are not know at this time. No additional compliance–testing specific to E1 has been completed. The User is responsible to ensure that the chosen unit complies with local regulatory requirements.

Cable Connections:

The cables necessary to connect to the CSU are pre–installed in the SC 4812ET frames. There are three (3) types of connections: network interface (to the punch block of the BTS), terminal interface (to the GLI board inside the BTS), and power. The pinout for the cables is given in Table G-1, Table I-2, and Table I-3.

Table I-1: Network Interface (8–pin RJ48C Connector)

Pin#	Circuit Name
1	RxD data (T1)
2	RxD data (R1)
4	TxD data (T)
5	TxD data (R)
7,8	Optional Shield
3,6	No Connection

Table I-2: Terminal Interface (8–pin RJ48C Connector)

Pin#	Circuit Name
1	RxD data (T1)
2	RxD data (R1)
4	TxD data (T)
5	TxD data (R)
7,8	Optional Shield
3,6	No Connection

DRAFT

Table I-3: Power Connector	
Pin#	**Circuit Name**
1	+V
2	Ground
3	–V

DRAFT

Numbers

110 style punch block, 81, 96
208–265 VAC, 36
208/240 VAC power cables, 102

A

A/C load center/breaker panel, 102
AC Current Requirements, 105
AC Load Center, 103
AC Power Cabling, 73
AC Power connection, 36
AC power pedestal, 30, 31, 103
Adequate ventilation, 31
Alarm and span line cable pin/signal information, 99
alarm and span line cabling, 81, 96
Alarm Signal, 73
Alarm signal specifications, 85
Alarm Span Line and Modem Cable Install Procedure, 83, 89, 91, 98
Amps non–continuous, 103
AMR, 23
anchor bolts, 38, 61
Antenna Cables 120 Degree Sector Configuration, 92
Antenna Panel, 81
antistatic plastic, 107

B

backup durations, 34, 118
Batteries Installed, 70
Battery Heater, 59, 66
Battery Mounting, 65
Battery strings, 33
battery strings, 68
Battery Strings Required – Minimun, 33
BBX–1, 24
breaker size, 103
BTS Cabinet, 24
BTS Cable Descriptions and Part Numbers, 78
BTS transmit and receive path cabling , 93
building codes, 41

C

C–CCP, 58
C–CCP shelf, 23
Cabinet Clearances, 27
Cabinet installation categories, 30
Cable descriptions , 78
Cable Loss and Bend Radius – Heliax , 35
Cable Pin/signa, 73
Cables Required for AC Power, 104
Cables Required for Earth Grounding, 80, 83, 88, 90, 91, 95, 98
Cabling, 62, 64, 65, 69
Cabling Diagram, 73
Cabling Installation Order, 75
CADWELD Joints, 42
carton, 54
CCD, 23
Checklist, 108
CIO, 23
Cleanup the Site, 107
clearance, 31

DRAFT

Concrete Mounting – Existing Pad, 61
concrete pad, 42
Concrete Pad and Ground System Installation, 42
Concrete pad and ground system installation, 43
Conduit Stub Height Detail, 44
conduit/cable entrance layout, 41
connect the DC battery backup, 99, 140, 159
Connection Materials, 42
crates, 54
CSM, 23
Customer I/O, 23

D

Dangerous voltages, 103, 131
DC Power Cables, 101, 142, 161
DC Power Connect, 73
DC Power Connection, 37
Demarcation Document, 14
Dimensions and Clearances, 26
Dimensions and clearances, 26, 27
documents, 13
Door closure problems, 41
Double–D, 146
Double–D Hole, 148
Drill mounting holes in pad, 38
Duplexer/Directional Coupler DDC, 22, 23, 26
dust masks, 38

E

ear plugs, 38
earth ground, 41
earth ground cables, 80, 95
Elevated Substructure, 64
Equipment identification, 52
Excessive RF energy, 49
Existing Concrete Pad Mounting – Preparation, 37
Exothermic, 43
expansion or optional equipment, 31
External alarm connector characteristics and requirements, 85
External FRUs, 20
eye–bolts, 62

F

flush, 37
Framing Materials – Concrete Pad, 42
FRU, 108

G

GLI2, 23
Global Positioning System, 87, 111
gravel, 43
ground ring, 41
Ground Rods, 42
Ground System Installation Procedure, 43
Ground Wire Connection, 36
grounding, 31
Grounding Guidelines for Cellular Radio Installations, 14
Grounding Ring , 44
Grounding Ring Detail, 44

H

handling batteries, 68
Heat Exchanger, 60
Heliax, 35
High Leakage current, 103, 131
How the frames are shipped , 53, 54
HSO, 23

I

Indoor Location Preparation, 30
Input and Output Cabling, 81, 96
Inspect, 58
Inspect for Damage, 51, 58
Install the concrete pad and ground system, 43
Installation completion checklist, 108

DRAFT

Installation Hardware, 16
Installing Batteries, 59
Installing Batteries in the Power Cabinet, 68
Installing the Remote GPS Hardware, 13
insulated, 31
inter-cabinet ca, 74
Intercabinet I/O, 76
Internal FRU, 25
Internal FRUs, 22

K

Knife or Scissors, 51

L

LFR Cable (if applicable), 36
Lightning protection, 37, 41
Linear Power Amplifier LPA, 20
load carrying limits, 40
Load Center Wiring, 105
Loading Considerations, 32
Local Electrical Codes, 103

M

Main Ground Bar, 76
Main RF Cable, 36
major components, 19
Materials Needed – Outdoor Location, 34
Maximum cable size, 103
minimum bend radius, 41
minimum clearances, 30, 34
Minimum Site Clearances, 28
Motorola Advanced Wideband Interface MAWI, 21
Motorolas guidelines, 41
Mounting Bolt Configuration, 63
mounting brackets, 61
Mounting Hole Dimensions, 46, 76, 117, 119
mounting pipe, 48
mounting surface, 30, 37
MPC, 23

N

New Concrete Pad Preparation, 41
New Concrete Pad Mounting, 64

O

Optimization, 107
Optimize the System, 110
Outdoor Location Preparation, 34

P

packed, 53
Pad Forms and Conduit Layout, 45, 46, 119
Power Cabinet Alarm Cable, 37
Power Cabinet Battery Cabling, 68
Power cable, 104
Power input connections , 100, 140, 160
pre–existing concrete pad, 61
pre–installed, 42
precast concrete, 42
Procedure for Bottom Access Installation, 94
Procedure for Side Wall Installation, 94
Procedure to Install Earth Grounding Cables, 80, 95
Procedure to Install Power Cables, 104
Procedure to Install the GPS and LFR Cabling, 94
Procedure to Unpack a BTS Cabinet, 54, 55
Product Description, 12
puddling, 40
Punch Block, 82, 84, 97

R

rainwater, 42
Re–install Access Panel, 138
rebars and dry wells, 43
Receive Distribution Card RXDC, 26
Remove protective covering, 107
Removing the Front Doors, 59, 60

DRAFT

Report any damage, 58
Required documents, 13, 14, 17, 18
RF Cabinet Alarm Cable Connection, 36
RF Cabinet Span and Modem Cable Connection, 36
RF GPS Cable, 36
RF I/O area, 94
RF I/O Plate, 93
RF interference, 49
RGPS Cable, 36
RGPS Head, 48
RGPS Mounting Considerations, 48
Roof load carrying limits, 63
ROOFTOP , 32
Rooftop Mounting Preparation, 40
Rooftop Elevated Mounting Procedure, 41
Rooftop Elevated Substructure Mounting, 63

S

Safety glasses, 38
safety glasses, 38
satellites, 48
Scope of Document, 12
sector configuration, 92
Sector/Carrier Configurations, 92
shipped fully assembled, 53
Shipping Crate, 56, 57
shop vacuum, 40
Side Cable Entry Hole Preparation, 146
Simplified Cabinet Cabling Diagram, 77
Site Document, 13
Site preparation – Overview, 30
sky, 49
snow loading, 32
Static sensitive equipment, 58, 75
submersion, 31, 34, 40
surges, 103, 131

T

Telco Interface Board TIB, 26
Tin Snips, 51
Tools and equipment required, 99, 140, 159
Transmission Lines – RF, 35
Transmit/Receive Module TRX, 25
trenches, 43

U

Unpack/Upright Procedure , 54
unpacking process, 52

V

vandalism, 31, 34
Views of Cabinet Side Walls below Shroud, 147

W

Weight, 33
weight, 32
Whats Next and Cleanup, 13
windstay latch, 60
wrist strap, 75
wriststrap, 58

Z

Zoning requirements, 32

DRAFT