MOTOROLA

GSM-204-423

Installation & Configuration Horizon*macro* outdoor

© Motorola 1999-2001
All Rights Reserved
Printed in the U.K.

Copyrights, notices and trademarks

Copyrights

The Motorola products described in this document may include copyrighted Motorola computer programs stored in semiconductor memories or other media. Laws in the United States and other countries preserve for Motorola certain exclusive rights for copyright computer programs, including the exclusive right to copy or reproduce in any form the copyright computer program. Accordingly, any copyright Motorola computer programs contained in the Motorola products described in this document may not be copied or reproduced in any manner without the express written permission of Motorola. Furthermore, the purchase of Motorola products shall not be deemed to grant either directly or by implication, estoppel or otherwise, any license under the copyrights, patents or patent applications of Motorola, except for the rights that arise by operation of law in the sale of a product.

Restrictions

The software described in this document is the property of Motorola. It is furnished under a license agreement and may be used and/or disclosed only in accordance with the terms of the agreement. Software and documentation are copyright materials. Making unauthorized copies is prohibited by law. No part of the software or documentation may be reproduced, transmitted, transcribed, stored in a retrieval system, or translated into any language or computer language, in any form or by any means, without prior written permission of Motorola.

Accuracy

While reasonable efforts have been made to assure the accuracy of this document, Motorola assumes no liability resulting from any inaccuracies or omissions in this document, or from the use of the information obtained herein. Motorola reserves the right to make changes to any products described herein to improve reliability, function, or design, and reserves the right to revise this document and to make changes from time to time in content hereof with no obligation to notify any person of revisions or changes. Motorola does not assume any liability arising out of the application or use of any product or circuit described herein; neither does it convey license under its patent rights of others.

Trademarks

and ***MOTOROLA*** are registered trademarks of Motorola Inc.
Aspira, Intelligence Everywhere, M-Cell and **Taskfinder** are trademarks of Motorola Inc.
All other brands and corporate names are trademarks of their respective owners.

Issue status of this manual

Introduction

The following shows the issue status of this manual since it was first released.

Version information

The following lists the versions of this manual in order of manual issue:

Manual issue	Date of issue	Remarks
O	12th Jan 00	Original issue.
A	31st Oct 01	Updated to include details for GSM850 and PCS1900.

Resolution of Service Requests

The following Service Requests are now resolved in this manual:

Service Request	GMR Number	Remarks
N/A	N/A	

General information

Important notice

If this manual was obtained when attending a Motorola training course, it will not be updated or amended by Motorola. It is intended for TRAINING PURPOSES ONLY. If it was supplied under normal operational circumstances, to support a major software release, then corrections will be supplied automatically by Motorola in the form of General Manual Revisions (GMRs).

Purpose

Motorola cellular communications manuals are intended to instruct and assist personnel in the operation, installation and maintenance of the Motorola cellular infrastructure equipment and ancillary devices. It is recommended that all personnel engaged in such activities be properly trained by Motorola.

WARNING	Failure to comply with Motorola's operation, installation and maintenance instructions may, in exceptional circumstances, lead to serious injury or death.

These manuals are not intended to replace the system and equipment training offered by Motorola, although they can be used to supplement and enhance the knowledge gained through such training.

About this manual

The manual contains: technical description of the hardware elements, installation and configuration information, repair procedures and parts lists for the Horizon*macro* outdoor equipment in Motorola GSM850, GSM/EGSM900, DCS1800 and PCS1900 systems.

The objectives are to help the reader:

- Gain an overview of the equipment and interconnection of components.
- Understand the function and operation of all components.
- Recognize configurations, and equivalent module functions to M-Cell*6* (a previous BTS type, interchangeable with Horizon*macro*).
- Be aware of the **warnings** (potential for harm to people) and **cautions** (potential for harm to equipment) to be observed when working on the equipment.
- Understand how to install and commission the equipment.
- Understand how to inspect, maintain, and repair the equipment.
- Have a clear ready reference for all dedicated information in one manual.

Cross references

Throughout this manual, cross references are made to the chapter numbers and section names. The section name cross references are printed bold in text.

This manual is divided into uniquely identified and numbered chapters that, in turn, are divided into sections. Sections are not numbered, but are individually named at the top of each page, and are listed in the table of contents.

Text conventions

The following conventions are used in the Motorola cellular infrastructure manuals to represent keyboard input text, screen output text and special key sequences.

Input

`Characters typed in at the keyboard are shown like this.`

Output

`Messages, prompts, file listings, directories, utilities, and environmental variables that appear on the screen are shown like this.`

Special key sequences

Special key sequences are represented as follows:

CTRL–c	Press the Control and c keys at the same time.
ALT–f	Press the Alt and f keys at the same time.
|	Press the pipe symbol key.
CR or **RETURN**	Press the Return (Enter) key. The Return key is identified with the ↵ symbol on both the PC and the Sun keyboards. The keyboard Return key may also be identified with the word Return.

First aid in case of electric shock

Warning

WARNING	**Do not touch the victim with your bare hands** until the electric circuit is broken. **Switch off.** If this is not possible, **protect yourself** with dry insulating material and pull or push the victim clear of the conductor.

Artificial respiration

In the event of an electric shock it may be necessary to carry out artificial respiration. Send for medical assistance immediately.

Burns treatment

If the patient is also suffering from burns, then, without hindrance to artificial respiration, carry out the following:

1. **Do not attempt to remove clothing adhering to the burn.**
2. If help is available, or as soon as artificial respiration is no longer required, cover the wound with a **dry** dressing.
3. Do **not** apply oil or grease in any form.

Reporting safety issues

Introduction

Whenever a safety issue arises, carry out the following procedure in all instances. Ensure that all site personnel are familiar with this procedure.

Procedure

Whenever a safety issue arises:

1. Make the equipment concerned safe, for example, by removing power.
2. Make no further attempt to tamper with the equipment.
3. Report the problem directly to the Customer Network Resolution Centre, Swindon +44 (0)1793 565444 or China +86 10 68437733 (telephone) and follow up with a written report by fax, Swindon +44 (0)1793 430987 or China +86 10 68423633 (fax).
4. Collect evidence from the equipment under the guidance of the Customer Network Resolution Centre.

Warnings and cautions

Introduction

The following describes how warnings and cautions are used in this manual and in all manuals of this Motorola manual set.

Warnings

Definition of Warning

A warning is used to alert the reader to possible hazards that could cause loss of life, physical injury, or ill health. This includes hazards introduced during maintenance, for example, the use of adhesives and solvents, as well as those inherent in the equipment.

Example and format

WARNING	Do not look directly into fibre optic cables or data in/out connectors. Laser radiation can come from either the data in/out connectors or unterminated fibre optic cables connected to data in/out connectors.

Cautions

Definition of Warning

A caution means that there is a possibility of damage to systems, software or individual items of equipment within a system. However, this presents no danger to personnel.

Example and format

CAUTION	Do not use test equipment that is beyond its calibration due date when testing Motorola base stations.

General warnings

Introduction

Observe the following warnings during all phases of operation, installation and maintenance of the equipment described in the Motorola manuals. Failure to comply with these warnings, or with specific warnings elsewhere in the Motorola manuals, violates safety standards of design, manufacture and intended use of the equipment. Motorola assumes no liability for the customer's failure to comply with these requirements.

Warning labels

Personnel working with or operating Motorola equipment must comply with any warning labels fitted to the equipment. Warning labels must not be removed, painted over or obscured in any way.

Specific warnings

Warnings particularly applicable to the equipment are positioned on the equipment and within the text of this manual. These must be observed by all personnel at all times when working with the equipment, as must any other warnings given in text, on the illustrations and on the equipment.

High voltage

Certain Motorola equipment operates from a dangerous high voltage of 230 V ac single phase or 415 V ac three phase supply which is potentially lethal. Therefore, the areas where the ac supply power is present must not be approached until the warnings and cautions in the text and on the equipment have been complied with.

To achieve isolation of the equipment from the ac supply, the ac input isolator must be set to off and locked.

Within the United Kingdom (UK) regard must be paid to the requirements of the Electricity at Work Regulations 1989. There may also be specific country legislation which need to be complied with, depending on where the equipment is used.

RF radiation

High RF potentials and electromagnetic fields are present in the base station equipment when in operation. Ensure that all transmitters are switched off when any antenna connections have to be changed. Do not key transmitters connected to unterminated cavities or feeders.

Refer to the following standards:

- ANSI IEEE C95.1-1991, *IEEE Standard for Safety Levels with Respect to Human Exposure to Radio Frequency Electromagnetic Fields, 3 kHz to 300 GHz*.
- CENELEC 95 ENV 50166-2, *Human Exposure to Electromagnetic Fields High Frequency (10 kHz to 300 GHz)*.

Laser radiation

Do not look directly into fibre optic cables or optical data in/out connectors. Laser radiation can come from either the data in/out connectors or unterminated fibre optic cables connected to data in/out connectors.

Lifting equipment

When dismantling heavy assemblies, or removing or replacing equipment, the competent responsible person must ensure that adequate lifting facilities are available. Where provided, lifting frames must be used for these operations. When equipments have to be manhandled, reference must be made to the Manual Handling of Loads Regulations 1992 (UK) or to the relevant manual handling of loads legislation for the country in which the equipment is used.

Do not ...

... substitute parts or modify equipment.

Because of the danger of introducing additional hazards, do not install substitute parts or perform any unauthorized modification of equipment. Contact Motorola if in doubt to ensure that safety features are maintained.

Battery supplies

Do not wear earth straps when working with standby battery supplies.

Toxic material

Certain equipment may incorporate components containing the highly toxic material Beryllium or its oxide Beryllia or both. These materials are especially hazardous if:

- Beryllium materials are absorbed into the body tissues through the skin, mouth, or a wound.
- The dust created by breakage of Beryllia is inhaled.
- Toxic fumes are inhaled from Beryllium or Beryllia involved in a fire.

Beryllium warning labels are fitted to equipment incorporating Beryllium or Beryllium Oxide. Observe all safety instructions given on warning labels.

Beryllium Oxide is used within some components as an electrical insulator. Captive within the component it presents no health risk whatsoever. However, if the component should be broken open or burnt, the Beryllium Oxide, in the form of dust or fumes, could be released, with the potential for harm.

Lithium batteries

Lithium batteries, if subjected to mistreatment, may burst and ignite. Defective lithium batteries must not be removed or replaced. Any boards containing defective lithium batteries must be returned to Motorola for repair.

General cautions

Introduction

Observe the following cautions during operation, installation and maintenance of the equipment described in the Motorola manuals. Failure to comply with these cautions or with specific cautions elsewhere in the Motorola manuals may result in damage to the equipment. Motorola assumes no liability for the customer's failure to comply with these requirements.

Caution labels

Personnel working with or operating Motorola equipment must comply with any caution labels fitted to the equipment. Caution labels must not be removed, painted over or obscured in any way.

Specific cautions

Cautions particularly applicable to the equipment are positioned within the text of this manual. These must be observed by all personnel at all times when working with the equipment, as must any other cautions given in text, on the illustrations and on the equipment.

Fibre optics

The bending radius of all fibre optic cables must not be less than 30 mm.

Static discharge

Motorola equipment contains CMOS devices that are vulnerable to static discharge. Although the damage caused by static discharge may not be immediately apparent, CMOS devices may be damaged in the long term due to static discharge caused by mishandling. Wear an approved earth strap when adjusting or handling digital boards.

See **Devices sensitive to static** for further information.

Devices sensitive to static

Introduction

Certain metal oxide semiconductor (MOS) devices embody in their design a thin layer of insulation that is susceptible to damage from electrostatic charge. Such a charge applied to the leads of the device could cause irreparable damage.

These charges can be built up on nylon overalls, by friction, by pushing the hands into high insulation packing material or by use of unearthed soldering irons.

MOS devices are normally despatched from the manufacturers with the leads shorted together, for example, by metal foil eyelets, wire strapping, or by inserting the leads into conductive plastic foam. Provided the leads are shorted it is safe to handle the device.

Special handling techniques

In the event of one of these devices having to be replaced, observe the following precautions when handling the replacement:

- Always wear an earth strap which must be connected to the electrostatic point (ESP) on the equipment.
- Leave the short circuit on the leads until the last moment. It may be necessary to replace the conductive foam by a piece of wire to enable the device to be fitted.
- Do not wear outer clothing made of nylon or similar man made material. A cotton overall is preferable.
- If possible work on an earthed metal surface. Wipe insulated plastic work surfaces with an anti-static cloth before starting the operation.
- All metal tools should be used and when not in use they should be placed on an earthed surface.
- Take care when removing components connected to electrostatic sensitive devices. These components may be providing protection to the device.

When mounted onto printed circuit boards (PCBs), MOS devices are normally less susceptible to electrostatic damage. However PCBs should be handled with care, preferably by their edges and not by their tracks and pins, they should be transferred directly from their packing to the equipment (or the other way around) and never left exposed on the workbench.

Motorola GSM manual set

Introduction

The following manuals provide the information needed to operate, install and maintain the Motorola equipment.

Generic GSM manuals

The following are the generic manuals in the GSM manual set, these manuals are release dependent:

Classification number	Name	Order number
GSM-100-101	System Information: General	68P02901W01
GSM-100-201	Operating Information: GSM System Operation	68P02901W14
GSM-100-202	Operating Information: OMC-R System Administration	68P02901W19
GSM-100-313	Technical Description: OMC-R Database Schema	68P02901W34
GSM-100-320	Technical Description: BSS Implementation	68P02901W36
GSM-100-321	Technical Description: BSS Command Reference	68P02901W23
GSM-100-403	Installation & Configuration: GSM System Configuration	68P02901W17
GSM-100-423	Installation & Configuration: BSS Optimization	68P02901W43
GSM-100-413	Installation & Configuration: OMC-R Clean Install	68P02901W47
GSM-100-501	Maintenance Information: Alarm Handling at the OMC-R	68P02901W26
GSM-100-520	Maintenance Information: BSS Timers	68P02901W58
GSM-100-521	Maintenance Information: Device State Transitions	68P02901W57
GSM-100-523	Maintenance Information: BSS Field Troubleshooting	68P02901W51
GSM-100-503	Maintenance Information: GSM Statistics Application	68P02901W56
GSM-100-721	Software Release Notes: BSS/RXCDR	68P02901W72
GSM-100-712	Software Release Notes: OMC-R System	68P02901W74

Related GSM manuals

The following are related Motorola GSM manuals:

Classification number	Name	Order number
GSM-001-103	System Information: BSS Equipment Planning	68P02900W21
GSM-002-103	System Information: DataGen	68P02900W22
GSM-002-703	Software Release Notes: DataGen	68P02900W76
GSM-005-103	System Information: GSM Advance Operational Impact	68P02900W25
GSM-008-103	System Information: Network Health Analyst	68P02900W36
GSM-008-703	Software Release Notes: Network Health Analyst	68P02900W77
GSM-TOOLS-001	System Information: Cell Optimization (COP)	68P02900W90
GSM-TOOLS-002	System Information: Motorola Analysis and Reporting System (MARS)	68P02900W94
GSM-TOOLS-701	Software Release Notes: Cell Optimization (COP)	68P02900W69
GSM-TOOLS-702	Software Release Notes: Motorola Analysis and Reporting System (MARS)	68P02900W68
GSM-006-202	Operating Information: OMC-R System Administration (OSI)	68P02901W10
GSM-006-413	Installation & Configuration: OSI Clean Install	68P02901W39
GSM-006-712	Software Release Notes: OMC-R OSI System	68P02901W70

Generic GPRS manuals

The following are the generic manuals in the GPRS manual set, these manuals are release dependent:

Classification number	Name	Order number
GPRS-300-101	System Information: GPRS Overview	68P02903W01
GPRS-300-202	Operating Information: OMC-G System Administration	68P02903W03
GPRS-300-222	Operating Information: GSN System Administration	68P02903W37
GPRS-300-313	Technical Description: OMC-G Database Schema	68P02903W46
GPRS-300-321	Technical Description: GSN Command Reference	68P02903W18
GPRS-300-423	Installation & Configuration: GSN Clean Install	68P02903W47
GPRS-300-413	Installation & Configuration: OMC-G Clean Install	68P02903W04
GPRS-300-501	Maintenance Information: Alarm Handling at the OMC-G	68P02903W19
GPRS-300-503	Maintenance Information: GSN Statistics Application	68P02903W20
GPRS-300-722	Software Release Notes: GSN System	68P02903W76
GPRS-300-712	Software Release Notes: OMC-G System	68P02903W70

Related GPRS manuals

The following are related Motorola GPRS manuals:

Classification number	Name	Order number
GPRS-001-103	System Information: GPRS Equipment Planning	68P02903W02
GPRS-005-103	System Information: GSN Advance Operational Impact	68P02903W38

BSS service manuals

The following are the Motorola Base Station service manuals, these manuals are not release dependent. The internal organization and makeup of service manual sets may vary, they may consist of from one to four separate manuals, but they can all be ordered using the overall catalogue number shown below:

Classification number	Name	Order number
GSM-100-020	Service Manual: BTS	68P02901W37
GSM-100-030	Service Manual: BSC/RXCDR	68P02901W38
GSM-105-020	Service Manual: M-Cell*2*	68P02901W75
GSM-106-020	Service Manual: M-Cell*6*	68P02901W85
GSM-201-020	Service Manual: M-Cell*city* and M-Cell*city+*	68P02901W95
GSM-202-020	Service Manual: M-Cell*access*	68P02901W65
GSM-203-020	Service Manual: Horizon*micro*	68P02902W36
GSM-206-020	Service Manual: Horizon*compact*	68P02902W15
GSM-205-020	Service Manual: Horizon*macro* Indoor	68P02902W06
GSM-204-020	Service Manual: Horizon*macro* Outdoor	68P02902W12
GSM-207-020	Service Manual: Horizon*office*	68P02902W46
GSM-209-020	Service Manual: Horizon*micro2* Horizon*compact2*	68P02902W61
GSM-208-020	Service Manual: Horizon*macro* 12 Carrier Outdoor	68P02902W66

GPRS service manuals

The following are the Motorola GPRS service manuals, these manuals include the Packet Control Unit (PCU) service manual which becomes part of the BSS for GPRS:

GPRS-301-020	Service Manual:GPRS Support Nodes (GSN)	68P02903W05
GPRS-302-020	Service Manual: Packet Control Unit (PCU)	68P02903W10

Classification number

The classification number is used to identify the type and level of a manual. For example, manuals with the classification number GSM-100-2xx contain operating information.

Order number

The Motorola 68P order (catalogue) number is used to order manuals.

Ordering manuals

All orders for Motorola manuals must be placed with your Motorola Local Office or Representative. Manuals are ordered using the order (catalogue) number. Motorola manual sets may also be ordered on CD-ROM.

GMR amendment

Introduction to GMRs

Changes to a manual that occur after the printing date are incorporated into the manual using General Manual Revisions (GMRs). GMRs are issued to correct Motorola manuals as and when required. A GMR has the same identity as the target manual. Each GMR is identified by a number in a sequence that starts at 01 for each manual at each issue. GMRs are issued in the form of loose leaf pages, with a pink instruction sheet on the front.

GMR procedure

When a GMR is received, remove and replace pages in this manual, as detailed on the GMR pink instruction sheet.

GMR amendment record

GMR instructions

When a GMR is inserted in this manual, the amendment record below is completed to record the GMR. Retain the pink instruction sheet that accompanies each GMR and insert it in a suitable place in this manual for future reference.

Amendment record

Record the insertion of GMRs in this manual in the following table:

GMR number	Incorporated by (signature)	Date
01		
02		
03		
04		
05		
06		
07		
08		
09		
10		
11		
12		
13		
14		
15		
16		
17		
18		
19		
20		
21		
22		
23		
24		
25		

Chapter 1

Introduction to installation

Chapter 1
Introduction to installation i

Introduction to installation and configuration . . . . . Inst. 1–1
Manual scope . . . . . Inst. 1–1
Safety instructions . . . . . Inst. 1–2
Software requirements . . . . . Inst. 1–2

Horizonmacro outdoor tool list . . . . . Inst. 1–3
Overview of tool list . . . . . Inst. 1–3
Tool list . . . . . Inst. 1–3

Introduction to installation and configuration

Manual scope

This category (GSM-204-423) covers installation and commissioning for the cabinet, arranged in the following chapters:

Chapter 1 Introduction

General information, safety precautions, and information about tools needed to install the equipment.

Chapter 2 Site preparation

Describes the procedures to be followed for initially preparing the site and installing the necessary ducting and concrete base.

Chapter 3 Installation of outdoor cabinet

All procedures necessary to install the cabinet ready for operation, with an overview of the different configurations available.

Chapter 4 Installing the cable shroud

Procedures for installing the optional cable shroud in various configurations.

Chapter 5 Installing the auxiliary equipment cabinet

All procedures necessary to install the optional auxiliary equipment cabinet, ready for operation.

Chapter 6 Commissioning of outdoor cabinet

All procedures necessary to enable the cabinet to be fully operational.

Chapter 7 Decommissioning of outdoor cabinet

All procedures necessary to decommission the outdoor cabinet.

NOTE	For hardware optimization and base site integration, refer to *Installation and Configuration: BSS Optimization: (GSM-100-423) 68P2901W43*.

Safety instructions

WARNING	This equipment must only be installed by trained personnel.

The following safety instructions must be observed when installing the equipment described in this manual:

- The installation and configuration procedures described in this manual must only be carried out by suitably trained personnel.
- Installation and commissioning must comply with all relevant national and regional regulations.
- The equipment must only be installed in a location to which unauthorized access can be prevented.
- Cabinets must be bolted down.

Software requirements

The GSM/EGSM900 and DCS1800 BTSs require BSS and OMC-R software release GSR4 (or later) in the network.

The GSM850 and PCS1900 BTSs require BSS and OMC-R software release GSR5.1 (or later) in the network.

Horizon*macro* outdoor tool list

Overview of tool list

This section lists the recommended tools required for installing, commissioning and maintaining the Horizon*macro* outdoor cabinet.

Tool list

Table 1-1 lists the recommended tools for Horizon*macro* outdoor.

Table 1-1 Horizon*macro* outdoor tool list

Quantity	Description
1 pair	Safety goggles
1	Hard hat
1	Dust mask
1 pair	Ear defenders
1	Antistatic wrist strap with coiled lead
1	Antistatic mat
1	Marker pen
1	Torch
1	Socket set (A/F/Metric 13 mm or 1/2 sq drive)
1	280 mm insulated adjustable spanner
1 each	Combination spanners A/F: 1/4, 5/16, 3/8, 7/16, 1/2, 9/16, 5/8, 11/16, 7/8, 3/4, 1.
1 each	Combination spanners metric: 8 mm to 25 mm
1	Ratchet ring spanner (15 mm x 13 mm)
1	Torque spanner (12 mm)
1	Torque wrench (1–25 Nm)
1	Torx driver set (T10 to T30) and Security Torx driver set (T10 to T30)
1	6 mm torque spanner (for SMA Tx Block connectors)
1	Security Allen key set
1	Claw hammer
1	Pipe cutter
1	Junior hacksaw
1	300 mm hacksaw
1 pair	150 mm side cutters
1 pair	150 mm heavy duty side cutters

Quantity	Description
1 pair	Flush cut wire cutters
1 pair	Light duty cable cutters
1 pair	Cable shears
1	Knife with retractable blade
1 pair	General purpose pliers
1 pair	Snipe nose pliers
1 pair	Industrial scissors
1 pair	GP serrated jaw pliers
1	Set of jeweller’s screwdrivers
1	Screwdriver set (including flat and cross-head blades)
1	Isolating transformer (suitable for site use)
1	Piston drill (suitable for drilling concrete and capable of accepting an M20 drill bit)
1	M20 drill bit
1	Drill bit set
1	6 m 240 V extension cable (twin outlet)
1	Soldering iron (dual temperature) with holder
1	Coax cable stripper for 2002 (75 ohm coaxial cable)
1	Hand crimp tool
1	Crimp tool for type 43 connectors
1	BNC crimp tool with inserts
1	Telephone plug crimp tool
1	50 mm crimp tool
1	Cable tie gun
1	1.5 m wooden step ladder
1	Table vice
1	250 mm vice grips
1	7.5 m tape measure
1	300 mm steel rule
1	Spirit level (1 m)
1	Centre punch
1	Pocket scriber
1	250 mm half round file
1 pair	Straight point tweezers
1	Null modem

Quantity	Description
1	RS232 mini tester
1	M to M gender changer
4	M16 collared eye bolts (min. rating 400 kg) Bolts must be manufactured to CE conformity.

Chapter 2

Site preparation

Chapter 2
Site preparation i

Preparation overview . . . . . Inst. 2–1
- Overview to site preparation . . . . . Inst. 2–1
- Pre-installation procedures . . . . . Inst. 2–1

Site requirements and considerations . . . . . Inst. 2–2
- Overview of requirements . . . . . Inst. 2–2
- Outdoor cabinet dimensions . . . . . Inst. 2–2
- Cabinet weights . . . . . Inst. 2–2
- Torque values . . . . . Inst. 2–2
- Power requirements . . . . . Inst. 2–3
- Environmental requirements . . . . . Inst. 2–4
- Structural requirements . . . . . Inst. 2–5
- Outdoor site dimensions . . . . . Inst. 2–6
- View of maximum site template layout . . . . . Inst. 2–7

Visiting the site . . . . . Inst. 2–9
- Overview of visiting the site . . . . . Inst. 2–9
- Before departure to site . . . . . Inst. 2–9
- Arrival at all sites . . . . . Inst. 2–9
- Arriving at occupied sites . . . . . Inst. 2–9
- Arriving at unoccupied sites . . . . . Inst. 2–10
- Leaving site during installation and optimization . . . . . Inst. 2–10
- Rubbish removal . . . . . Inst. 2–10
- Rural sites . . . . . Inst. 2–11
- On site safety . . . . . Inst. 2–11

Preparing the site . . . . . Inst. 2–12
- Introduction to site preparation . . . . . Inst. 2–12
- Base site structure . . . . . Inst. 2–12
- Site requirements . . . . . Inst. 2–12
- Site access . . . . . Inst. 2–12
- Site layout . . . . . Inst. 2–12

Earthing the site . . . . . Inst. 2–13
- Overview . . . . . Inst. 2–13
- Earthing requirements . . . . . Inst. 2–13
- Earth electrode system . . . . . Inst. 2–13
- Cross bonding . . . . . Inst. 2–14
- Earthing procedure . . . . . Inst. 2–14
- Earth electrode testing . . . . . Inst. 2–14

Preparing the foundation . . . . . Inst. 2–16
- Overview of foundation preparation . . . . . Inst. 2–16
- Horizonmacro foundation . . . . . Inst. 2–16
- Preparing the foundation . . . . . Inst. 2–17

Preparation overview

Overview to site preparation

This chapter contains:

- Information that should be read for initial planning.
- Information that should be read for safe completion of procedures.
- Pre-installation procedures to be followed to prepare the site before beginning the installation.

Pre-installation procedures

Pre-installation for the cabinet comprises the sections listed in Table 2-1.

Table 2-1 Pre-installation sections in this chapter

Section	Description
Site requirements and considerations	Details mechanical, electrical and structural parameters to be taken into account when selecting a site.
Visiting the site	Defines the site operating procedures.
Preparing the site	Details general site construction parameters.
Earthing the site	Earthing techniques.
Preparing the foundation	Details the procedures for laying the cabinet foundations and fitting the cabinet template.

Site requirements and considerations

Overview of requirements

The base site area, where the equipment is to be installed, must meet:

- Structural requirements including:
  - Space for all conditions, including maintenance, expansion and associated cables.
  - Allowance for cabinet height.
  - Allowance for weight, including that for potential additions on expansion.
  - Additional space to allow doors to be fully opened to 120 degrees.
- Environmental and power requirements, as defined in manual specifications.

Outdoor cabinet dimensions

The dimensions of cabinets are shown in Table 2-2.

Table 2-2 Cabinet dimensions

Cabinet type	Height	Width	Depth
Horizon*macro* outdoor cabinet	1364 mm	1300 mm	594 mm
Horizon*macro* auxiliary equipment housing	1364 mm	604mm	594 mm

Cabinet weights

The cabinet weights are shown in Table 2-3.

Table 2-3 Outdoor cabinet weights

BTS cabinet with six transceivers	Auxiliary equipment housing empty / 16 batteries fitted
360 kg	110 kg / 500 kg

Torque values

Use the torque values listed in Table 2-4 during installation (see **NOTE** for M12).

Table 2-4 Torque values for all cabinet screws/bolts or RF connectors

Screw/bolt size	M4	M6	M8	M10	SMA	N-type	7/16
Torque value (Nm)	2.2	3.4	5	10	1	3.4	25

NOTE The setting of torque value for M12 anchor screws/bolts depends on local supplies. Refer to the manufacturer's data for correct values.

Power requirements

The power requirements of cabinets depends on the configuration.

Power consumption (dc and ac)

Table 2-5 lists typical and maximum power consumption values.

Table 2-5 Power consumption of full cabinet, including digital redundancy and external battery charging

Typical measured consumption	Maximum power consumption
2200 W	5600 W

NOTE Maximum power consumption figures are theoretical values derived under extreme conditions and are affected by variables such as temperature, component tolerances, transmission power and supply voltage. Although these figures must be considered when planning site power requirements, typical measured consumption values will be lower.

Cabinet input power supply requirements

WARNING All cabinets and supply cables must be protected by an upstream fuse or circuit breaker.

Table 2-6 lists the power supply requirements for the different power supply options.

Table 2-6 Main outdoor cabinet power requirements

Nominal voltage	Supply voltage and frequency range	Current supply maximum
110 V ac single phase	88 to 134 V ac at 45 to 66 Hz	54.4 A (at nominal voltage)
230 V ac single phase	176 to 265 V ac at 45 to 66 Hz	26.1 A (at nominal voltage)
230 V ac three phase and neutral (star)	176 to 265 V ac at 45 to 66 Hz	26.1 A (at nominal voltage)
230 V ac three phase without neutral (delta)	176 to 265 V ac at 45 to 66 Hz	26.1 A (at nominal voltage)

RF output power

Table 2-7 lists the RF power output of the CTU types.

Table 2-7 CTU RF power output at Tx connector	
GSM850 and EGSM900	**DCS1800 and PCS1900**
60 W (47.8 dBm) +/–1.0 dBm	50 W (47.0 dBm) +/– 1.0 dBm

Table 2-8 lists the expected power output from the various Tx blocks for both types of CTU.

Table 2-8 RF power output at cabinet after Tx blocks				
Tx block	**GSM850**	**EGSM900**	**DCS1800**	**PCS1900**
TDF	40 W (46.0 dBm)		32 W (45.1 dBm)	
DCF	20 W (43.0 dBm)		16 W (42.1 dBm)	
DDF	8.5 W (39.3 dBm)		7 W (38.5 dBm)	

Environmental requirements

Table 2-9 lists the operating environmental limits.

Table 2-9 Environmental limits		
Environment	**Temperature**	**Relative Humidity**
Operating	–40 °C to +50 °C plus a solar gain of 1.2 kW/m^2	5% to 100% relative humidity, not to exceed 30 g water / m^3 air.
Storage	–45 °C to +70 °C	8% to 100% relative humidity, not to exceed 30 g water / m^3 air.

NOTE This specification is valid up to 3 km altitude, corresponding to an atmospheric pressure range of 648 to 1048 millibars.

Structural requirements

There must be adequate clearance at the front of (648 mm), and above (1900 mm), the equipment for operation and maintenance purposes. It is also recommended that there is adequate side clearance to open the doors to 120° (see Figure 2-1), and to fit the optional shroud on the cable entry side.

The foundation or structure on which the BTS cabinet is mounted must be of sufficient strength to withstand 105 knot (120 mph) winds on the cabinet front or rear and a maximum gross weight of 360 kgs.

The cabinet ventilation entry and exhaust is solely from the bottom front of the cabinet, allowing a cabinet to be placed against a wall. However, a minimum clearance of 240 mm is required on the cable entry side, between the cabinet and obstructions, such as a wall or another cabinet.

Allow 1000 mm clearance at front and side where possible, to facilitate installation and maintenance.

NOTE	In seismically active areas, Motorola suggest using a qualified structural engineer to assess frame mounting requirements, such as floor construction, mounting anchors and cell site construction.

Outdoor site dimensions

Basic outdoor site

Figure 2-1 shows the site layout plan for a single cabinet with dimensions and required clearances (optional auxiliary equipment housing not shown).

NOTE	Allow 180 mm additional side clearance if a cable shroud is to be fitted.

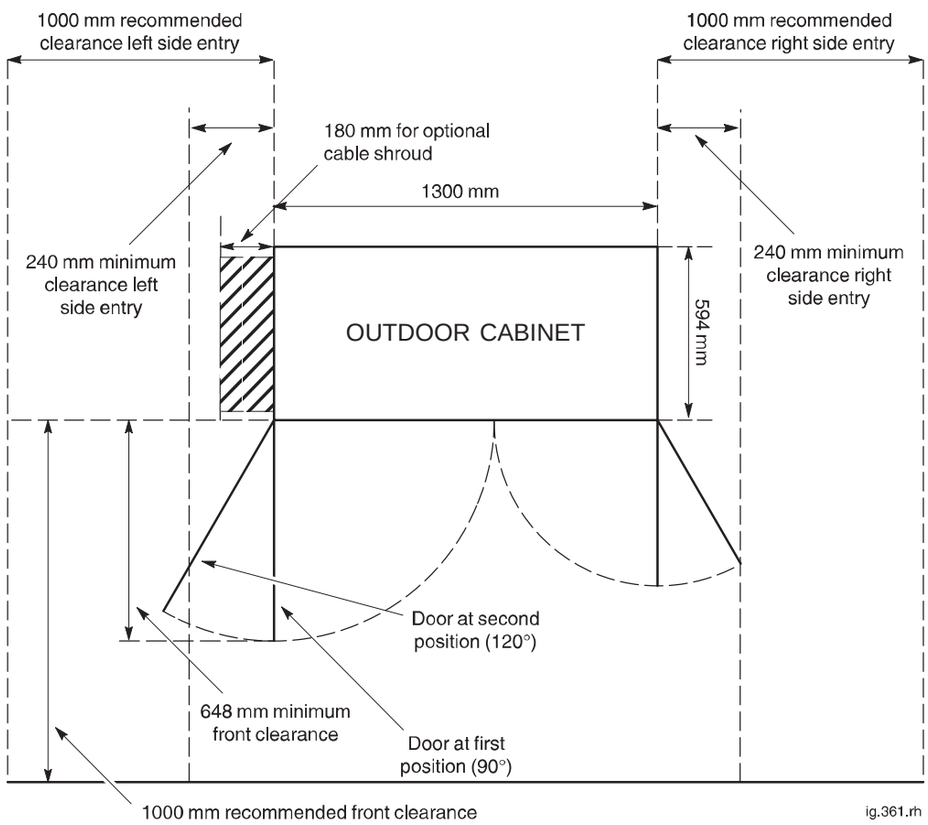

Figure 2-1 Outdoor cabinet site layout plan view (cable entry on left side)

Outdoor site with auxiliary equipment housing

Figure 2-2 shows the site layout plan for a single cabinet and optional auxiliary equipment housing with dimensions and required clearances.

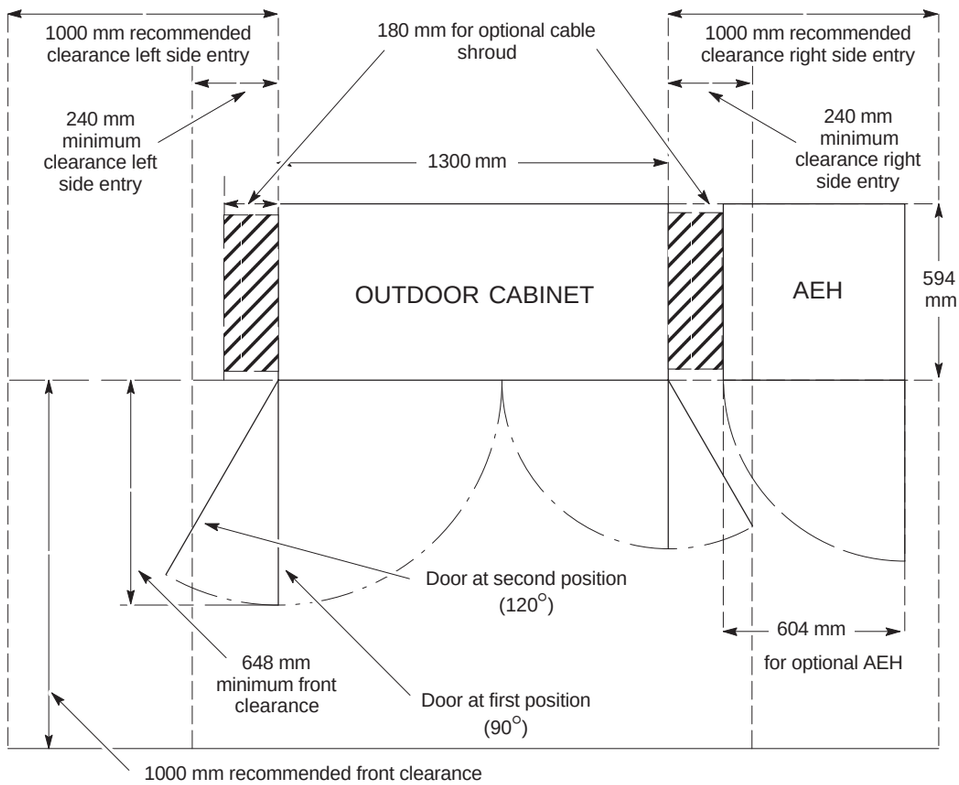

Figure 2-2 Outdoor cabinet site layout plan view (including optional equipment)

View of maximum site template layout

Figure 2-3 shows a plan view of the template layout for the maximum site configuration. Using the dimensions and clearances shown, the site layout for any combination of BTS cabinets and auxiliary equipment housings can be calculated.

NOTE	If a steel structure is to be used instead of a concrete base, the dimensions shown in Figure 2-3 can be used to determine the location of the mounting bolt holes. Figure 2-3 only shows template and mounting hole dimensions and clearances, cabinet dimensions are slightly larger.

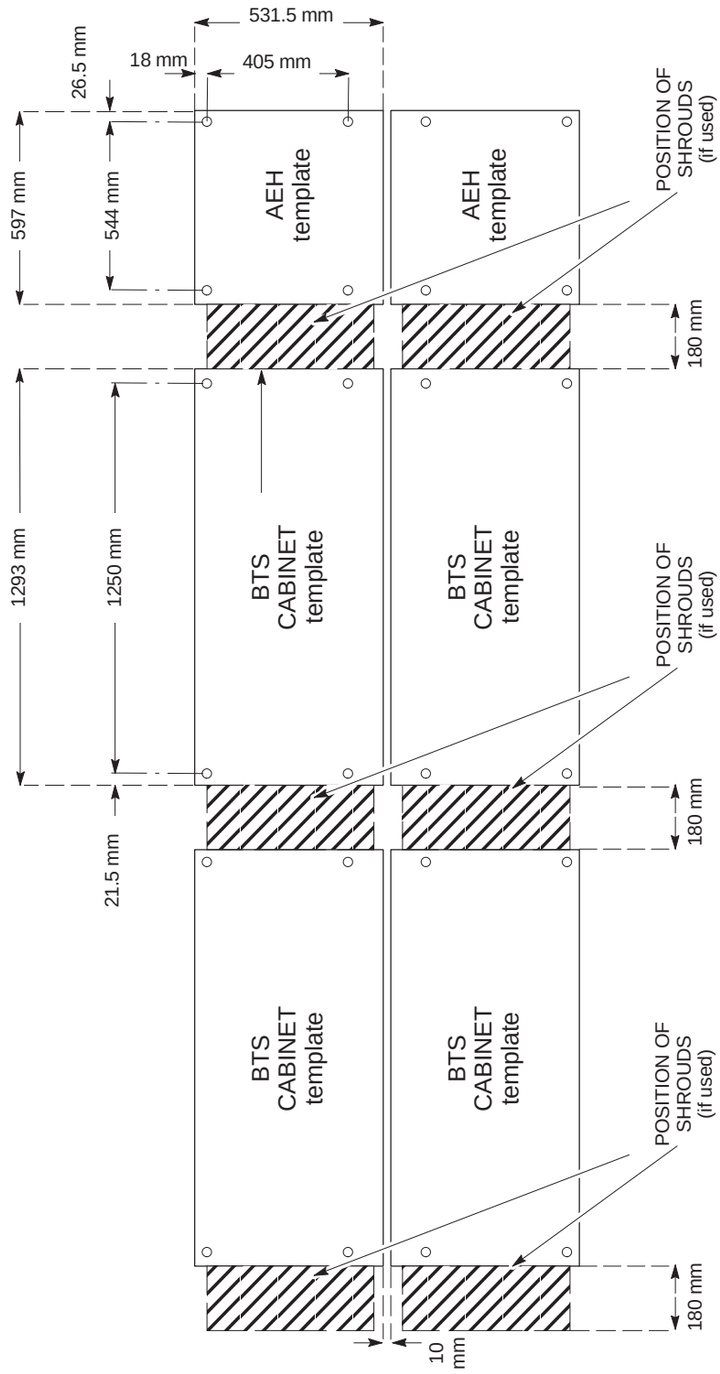

Figure 2-3 Plan view of template layout for maximum site configuration

Visiting the site

Overview of visiting the site

When preparing to do work at a site and upon arrival, follow the instructions provided in this section.

Before departure to site

Before departing to the site:

1. Ensure that team members have adequate test equipment, tools, and hardware to carry out the task. Check for any special requirements.
2. Contact the person in charge of the site to advise of the team's estimated time of arrival and the expected duration of their stay on the site. This will usually have been dealt with previously, but it is always advisable to make sure that the information has been passed on.
3. Ensure that the team read the site access details on each visit to a site as local regulations may change.

Arrival at all sites

When entering any site:

1. Do not enter the site until contact has been made with the OMC-R or MSC. Contact the local OMC-R and local MSC to announce the team's arrival before entering the site.
2. Enter the site and check for site alarms, for example intruder alarms, that may have been activated by entry.
3. Read any local instructions.

Arriving at occupied sites

In any exchange or occupied building, contact the person in charge or caretaker of the site, who will explain local regulations. This person may also advise teams on parking, rubbish removal, and canteen facilities.

Arriving at unoccupied sites

When entering an unoccupied site:

1. Do not enter the site until contact has been made with the OMC-R or MSC. Contact the local OMC-R and local MSC to announce the team's arrival before entering the site.
2. Enter the site and check for site alarms, for example intruder alarms, that may have been activated by entry.
3. Advise the local OMC-R or MSC that the team is on site and indicate the expected duration of time on site.
4. Arrange with the OMC-R or MSC to check the E1/T1 links as soon as possible.

Leaving site during installation and optimization

When leaving a site:

1. Contact the local OMC-R or MSC to announce the team's departure.
2. Out of hours, if an alarm is fitted and the local MSC staff have gone home, contact the Network Control Centre or OMC-R and inform them of the team's departure.
3. Sign out of the site as necessary.

Rubbish removal

Clear rubbish from the site on completion of the job, unless otherwise indicated by the customer.

WARNING	Do not burn rubbish, as packaging might give off toxic gases.

Rural sites

It is the responsibility of the senior member of the team to ensure that all personnel on site are aware of the country code and, especially with respect to water authority sites, any relevant health regulations.

Adhere to these points of the Country Code:

- Guard against all risk of fire.
- Fasten all gates (remember site visits could be traced back if a complaint is made).
- Leave no litter.
- Drive carefully on country roads and observe speed restrictions at all times.
- Keep to the paths/tracks across farm land.

On site safety

All personnel must:

- Ensure that under no circumstances should anyone move cabinets without assistance. Cabinets must be safely positioned at all times.
- Wear supplied safety helmets when antenna or overhead work is in progress, and when local regulations require them.
- Wear supplied safety goggles and dust masks when drilling. This is particularly important when drilling overhead ironwork.
- Wear supplied ear protectors while drilling is in progress.
- Wear approved safety footwear when moving heavy equipment.

Stop any work that you are supervising should any person in your team not be properly protected, or be unaware of safety requirements.

When installing cable ties, even temporarily, cut the excess or tail properly. This is to prevent sharp edges inflicting injury when not cut flush with the locking edge.

Preparing the site

Introduction to site preparation

This section provides a general overview on the preparation of a site, and site requirements. For specific sites, refer to the site-specific documentation.

Base site structure

The base site structure should be designed to meet accepted cellular system specifications. Additionally, the site must meet the environmental and electrical operating criteria. See **Site requirements and considerations** earlier in this chapter.

Site requirements

The customer should provide secure access, free from unauthorized personnel, ample protection from fire, and adequate lighting and clearance at the front and rear of the equipment for operation and maintenance. Additionally, four cable ducts with sufficient space for communications cables, power cables, earth cables, and antenna RF cables should be provided.

Site access

The site access road and equipment receiving area must be constructed of asphalt, concrete, or other suitable load bearing aggregate, capable of supporting the transportation vehicle and the cabinet. The area available and overhead clearance must be sufficient to accommodate turning or reversing of the transportation vehicle, and to allow the vehicle to depart after unloading.

Ensure there is a minimum overhead clearance of 6 m to enable the Horizon*macro* cabinet to be lifted from the transport vehicle. Take special care if the cabinet has to be lifted in the vicinity of overhead cables.

NOTE	Ensure the areas, for unloading and installation are clear of standing water, fallen leaves, mud, and building debris.

Site layout

The site layout plans are provided in the **Site requirements and considerations** section. Figure 2-1, Figure 2-2 and Figure 2-3 show the site layout plans with dimensions.

Earthing the site

Overview

The following provides information on suggested earthing procedures for an outdoor site.

The separate earth systems must be isolated from each other to facilitate periodic testing of the earth systems. Earth inspection pits are provided for this purpose.

Earthing requirements

Each cabinet site external earth must be assessed on an individual site basis, as conditions will vary considerably depending on local soil conditions and site topography. It is essential that a site survey and soil resistance test be performed before installation. The site architect defines the site and foundation earthing requirements to ensure a resistance of less than 10 ohms. A typical site earthing plan is shown in Figure 2-4.

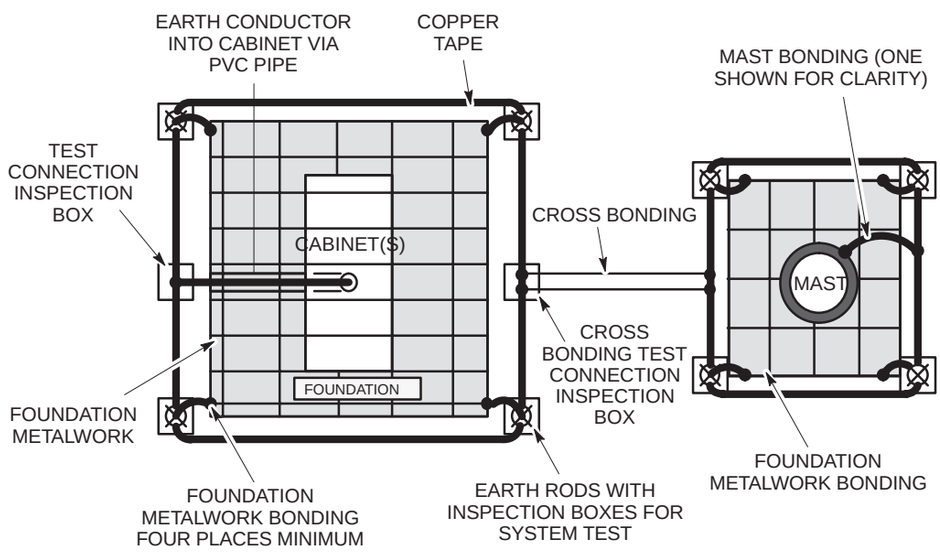

Figure 2-4 Typical site earthing plan for open field site

Earth electrode system

The earth electrode system consists of a series of interconnected earth electrodes (minimum of four) that are located outside the foundation reinforcing metalwork. Refer to Figure 2-4 for details. The earth rods should be connected together using TCO30 solid tape conductors, avoiding any sharp bends; a minimum bend radius of 250 mm is recommended.

Cross bonding

Foundation metalwork must be connected to the earth electrode network. The earth system must also be cross-bonded to an adjacent antenna mast, with two connections made between the two systems. All earth cable terminations must be crimped, clamped or welded; soldered joints are not permitted.

Earthing procedure

The cabinet equipment must be earthed as detailed in this procedure. Make provision for routeing the earth cables into the site and to the cabinet before beginning installation of the system racks.

Excavate the site to accommodate the foundation to a depth determined by the site architect. For the earth components to be used, refer to Figure 2-4 and proceed as follows:

1. Drive a minimum of four copper earth rods 2.4 m long below the surface, and connect these rods together with 70 mm cross-sectional area (CSA) solid conductor.
2. Connect the earth rods to the cabinet earth busbar via a 70 mm CSA solid conductor.
3. Check that the earth electrode installation resistance is less than 10 ohms. If the resistance is greater than 10 ohms, install more earth rods to bring the resistance within specification.
4. Cross-bond the earth system to the adjacent antenna mast earth with conductors of 70 mm CSA, buried at a depth of not less than 500 mm.
5. Bond equipment such as fences, fuel tanks, metal buildings, or steel building skids associated with the site to the closest earthing rod or bonding wire.

Earth electrode testing

Earth electrodes should be tested as detailed in BS7671 16th Edition or equivalent national and regional regulations. One of three methods of earth electrode test (earth mat) is used:

- Fall of potential.
- 61.8% rule.
- Slope method.

The method of test to be used at a specific site is determined by the site conditions, the extent of the earth system and the limitations of the site boundaries. The method used at the site is to be determined from the earth electrode compliancy certificate and repeated annually. Before proceeding with the test, ensure that the resistance of the test leads is less than 0.05 ohms.

Fall of potential

This method of testing is used for measuring resistance of earth electrodes but is only practical on single earth electrode systems.

Drive the current test spike and potential spike into the ground as shown in Figure 2-5. Perform the three resistance tests and check that the average of the three tests is less than 10.0 ohms.

61.8% Rule

This method applies when the three electrodes (earth, potential and current) can be positioned in a straight line, the soil is homogenous and also when single electrode systems are being used.

Set up the test equipment as shown in Figure 2-5 with the potential spike placed at a distance of 61.8% of the distance from the earth electrode to the current test spike. A greater accuracy can be achieved by increasing the number of readings.

Slope method

This method applies to large earth systems. Refer to Figure 2-5, but insert the potential spike at a number of points between the earth system and the current spike. A minimum of six readings must be taken to plot a graph and this graph compared to published tables to calculate the resistance.

On completion of testing, complete and sign the earth electrode test documentation (Forms of Completion and Inspection Certificate).

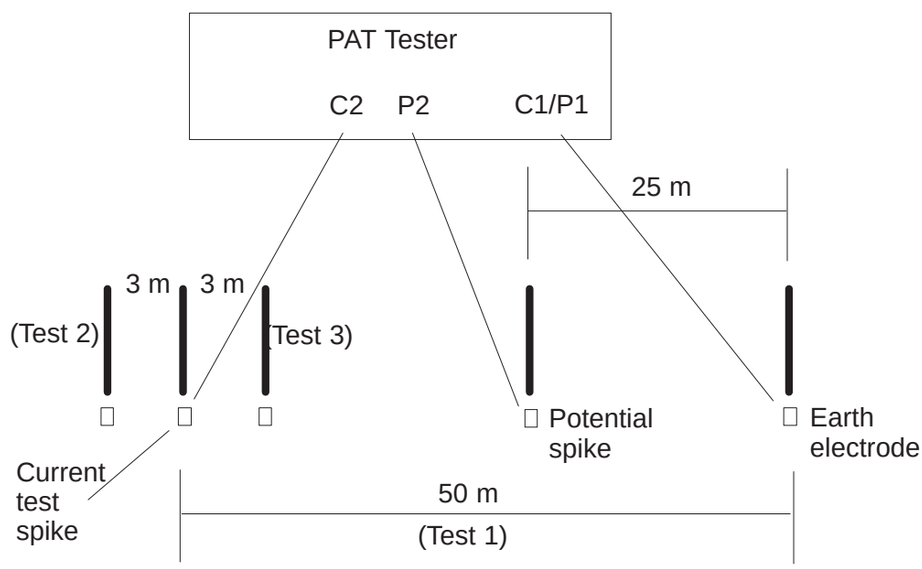

Figure 2-5 Earth electrode test setup

Preparing the foundation

Overview of foundation preparation

Motorola recommend the cabinet be installed on a separate concrete base of sufficient size and construction to accommodate the Horizon*macro* cabinet size and weight, as determined by a structural engineer.

WARNING	Excavations exceeding 1.2 m in depth must be adequately shored to prevent land slip or trench collapse. Excavated earth must **not** be placed within 1 m of the excavation edge.

NOTE	At the customers discretion a steel structure may also be used, with size, construction and layout determined by a structural engineer. Reference should be made to **Site requirements and considerations** in this chapter for details of equipment weights and dimensions.

The foundation depth is determined by a soil survey performed by the site architect, but must be of sufficient strength to withstand 105 knot (120 mph) winds on the cabinet front or rear and a maximum gross weight of 360 kgs.

Horizon*macro* foundation

The following cross-sectional diagram in Figure 2-6 shows a typical foundation for the Horizon*macro* (bolts and anchors not to scale).

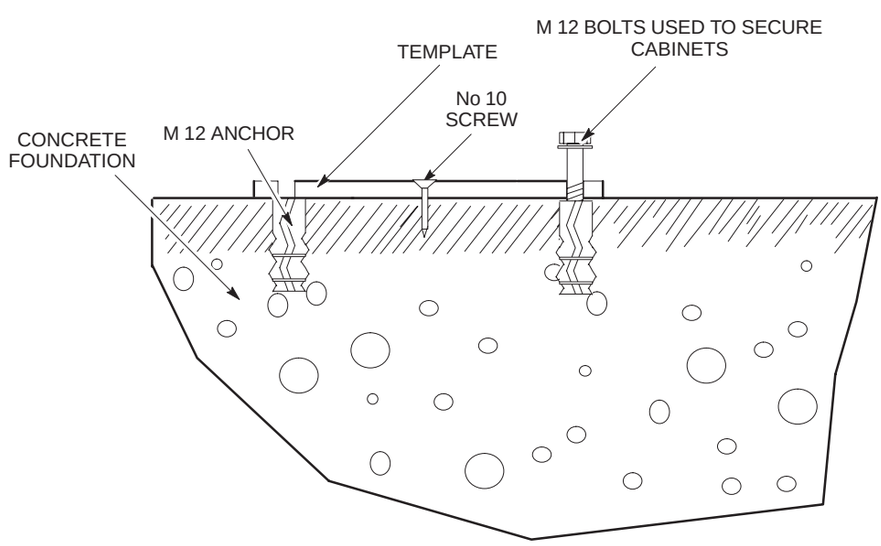

Figure 2-6 Typical Horizon*macro* foundation

Preparing the foundation

To prepare the foundation:

1. Excavate the foundation (refer to Figure 2-6).

WARNING	Do not place excavated earth within 1 m of the excavation edge.

2. Erect the concrete shuttering to produce the required base.
3. Position the cable ducts (if low level cable entry method is in use). Ensure that they are positioned so that they face towards the cabinet entry point.
4. Make the foundation from 20 mm mix concrete with the cable ducts (If used) mounted in position. If required, locally thicken the areas around the foundation bolts.

CAUTION	Ensure the concrete is laid to give a water run off with tapered edges. Where a field site, other than an already permanent hard standing, is laid, the foundation must have a bevelled finish. To avoid over stressing the cabinet, use a spirit level or theodolite to check that the concrete plinth surface is level to 3 mm across diagonals.

MOTOROLA

Chapter 3

Installing the BTS cabinet

Chapter 3
Installing the BTS cabinet i

Installation overview . . . . . Inst. 3–1
- Introduction to installation . . . . . Inst. 3–1
- Installation sections . . . . . Inst. 3–1
- E1/T1 line testing . . . . . Inst. 3–1
- Cabinet view . . . . . Inst. 3–2
- Equipment package units . . . . . Inst. 3–3

Equipment delivery and packaging . . . . . Inst. 3–4
- Delivery and packaging overview . . . . . Inst. 3–4
- Packaging . . . . . Inst. 3–4

Weather conditions affecting unpacking/installation . . . . . Inst. 3–5
- Overview of weather considerations . . . . . Inst. 3–5
- Weather conditions . . . . . Inst. 3–5
- Maintenance cover . . . . . Inst. 3–5

Unpacking and preparing the cabinet . . . . . Inst. 3–7
- Tools . . . . . Inst. 3–7
- Safety considerations . . . . . Inst. 3–7
- Cabinet access procedures . . . . . Inst. 3–8
- Procedures for unpacking and preparing the cabinet . . . . . Inst. 3–9
- Visual inspection . . . . . Inst. 3–11
- Safe disposal of packing material . . . . . Inst. 3–11
- CTU module allotted slot retention . . . . . Inst. 3–11

Installing the template and mounting bolt anchors . . . . . Inst. 3–12
- Introduction to template and mounting bolt anchor installation . . . . . Inst. 3–12
- View of template . . . . . Inst. 3–12
- Procedure for installing template . . . . . Inst. 3–13
- Recommended bolt length for concrete base . . . . . Inst. 3–13
- Procedure for installing cabinet bolt anchors . . . . . Inst. 3–14

Fitting the outdoor cabinet onto its base . . . . . Inst. 3–15
- Procedure for fitting a BTS cabinet . . . . . Inst. 3–15
- Mounting additional cabinets . . . . . Inst. 3–15

Earthing and transient protection . . . . . Inst. 3–16
- Site earthing . . . . . Inst. 3–16
- Secondary transient and lightning protection . . . . . Inst. 3–16

Connecting the internal batteries . . . . . Inst. 3–17
- Introduction to connecting the internal batteries . . . . . Inst. 3–17
- Internal battery connection procedure . . . . . Inst. 3–17
- View of internal battery tray . . . . . Inst. 3–18

Installing and connecting power and earth cabling . . . . . Inst. 3–19
- Overview of power and earth cabling . . . . . Inst. 3–19
- Cable routeing . . . . . Inst. 3–19
- Cabinet earthing points . . . . . Inst. 3–20
- Power supply cable colour coding . . . . . Inst. 3–20
- Preparing for connection . . . . . Inst. 3–21

Connecting 230 V single phase ac power cables . . . . . Inst. 3–22
- Configuring the number 1 ac distribution box . . . . . Inst. 3–22
- Connecting 230 V ac single phase mains input cables . . . . . Inst. 3–22
- 230 V ac single phase wiring diagram . . . . . Inst. 3–23

Connecting 110 V single phase ac power cables . . . . . Inst. 3–24
Configuring the number 1 ac distribution box . . . . . Inst. 3–24
Connecting 110 V ac single phase mains input cables . . . . . Inst. 3–24
110 V ac single phase wiring diagram . . . . . Inst. 3–25
Connecting 230 V 3-phase (star) ac power cables . . . . . Inst. 3–26
Configuring the number 1 ac distribution box . . . . . Inst. 3–26
Connecting 230 V ac 3-phase (star) mains input cables . . . . . Inst. 3–26
230 V ac 3-phase (star) wiring diagram . . . . . Inst. 3–27
Connecting 230 V 3-phase (delta) ac power cables . . . . . Inst. 3–28
Configuring the number 1 ac distribution box . . . . . Inst. 3–28
Connecting 230 V ac 3-phase (delta) mains input cables . . . . . Inst. 3–29
230 V ac 3-phase (delta) wiring diagram . . . . . Inst. 3–30
Connecting antennas . . . . . Inst. 3–31
Overview of antenna connections . . . . . Inst. 3–31
Cable entry earth plates . . . . . Inst. 3–32
Fitting inter-cabinet RF cables to earth plates . . . . . Inst. 3–32
Routeing RF cables between cabinets. . . . . Inst. 3–33
Types of RF connector . . . . . Inst. 3–33
Torque of RF connectors . . . . . Inst. 3–33
Fitting left side (cable entry) earth plate . . . . . Inst. 3–34
Fitting expansion plates . . . . . Inst. 3–35
RF connection principles . . . . . Inst. 3–36
Rx/Tx single antenna duplexing . . . . . Inst. 3–36
Suggested RF configurations . . . . . Inst. 3–37
Overview of configuration diagrams . . . . . Inst. 3–37
Single cabinet connection kits and cables . . . . . Inst. 3–38
Multiple cabinet connection kits and cables . . . . . Inst. 3–39
Configuration for omni 1 . . . . . Inst. 3–40
Configuration for omni 1 or 2 (with/without diversity) . . . . . Inst. 3–41
Configuration for omni 3 or 4 . . . . . Inst. 3–42
Configuration for omni 3 . . . . . Inst. 3–42
Configuration for omni 4 . . . . . Inst. 3–43
Configuration for omni 5 or 6 . . . . . Inst. 3–43
Configuration for sector 1/1 or 2/2 . . . . . Inst. 3–44
Configuration for sector 1/1 . . . . . Inst. 3–44
Configuration for single cabinet sector 3/3 . . . . . Inst. 3–45
Configuration for 2 cabinet sector 3/3 . . . . . Inst. 3–46
Configuration for 2 cabinet sector 4/4 . . . . . Inst. 3–46
Configuration for 2 cabinet sector 5/5 or 6/6 . . . . . Inst. 3–47
Configuration for single cabinet sector 1/1/1, 1/1/2, 1/2/2 or 2/2/2 . . . . . Inst. 3–48
Configuration for 2 cabinet sector 2/2/2 . . . . . Inst. 3–49
Configuration for 2 cabinet sector 3/3/3 or 4/4/4 . . . . . Inst. 3–50
Configuration for 3 cabinet sector 3/3/3 . . . . . Inst. 3–51
Configuration for 2 cabinet sector 4/4/4 . . . . . Inst. 3–52
Configuration for 3 cabinet sector 4/4/4 . . . . . Inst. 3–53
Configuration for sector 5/5/5 or 6/6/6 . . . . . Inst. 3–54
Configuration for sector 8/8/8 . . . . . Inst. 3–55
Configuration for dual band 1/1/1-3/3/3 . . . . . Inst. 3–56
Configuration for dual band 3/3/3-1/1/1 . . . . . Inst. 3–56

Connecting fibre optic cables . . . . . Inst. 3–57
Location of fibre optic connections . . . . . Inst. 3–57
Care of fibres . . . . . Inst. 3–57
Connecting fibre optic cables between cabinets . . . . . Inst. 3–60

Interface panel cabling . . . . . Inst. 3–61
Interface panel diagram and pinout overview . . . . . Inst. 3–61
Interface panel connector pinout tables . . . . . Inst. 3–62
GPS connector . . . . . Inst. 3–62
RTC connector (not used) . . . . . Inst. 3–63
BIB (BIM) interconnection . . . . . Inst. 3–64
T43 (CIM) interconnection . . . . . Inst. 3–65
PIX inputs and outputs . . . . . Inst. 3–66
ICS connector . . . . . Inst. 3–67
External alarm connector . . . . . Inst. 3–68

Installation overview

Introduction to installation

This chapter provides the information required to install the Horizon*macro* outdoor cabinet and its internal and external interfaces.

CAUTION	Ensure that all site associated equipment is completely installed before commissioning the cabinet for operation.

NOTE	Some site equipment may not be produced by Motorola, including battery chargers, power supplies, and antennas. Refer to site-specific documentation and non-Motorola vendor instructions.

Before starting an installation, ensure the site has been prepared according to the description summarised in **Preparation overview** in Chapter 2, and the site-specific documentation.

Installation sections

Installing cabinets comprises the sections shown in Table 3-1.

Table 3-1 Installation sections in this chapter

Section	Description
Equipment delivery and unpacking	Information on delivery packaging, and how to unpack the equipment.
Fitting outdoor cabinet onto base	Provides procedure for attaching cabinet to prepared plinth.
Earthing and transient protection	Describes site earthing procedures and cabinet internal earths.
Connecting the internal batteries	Describes the procedure for connecting up the internal batteries.
Installing power and earth cabling	Describes the power supply earthing requirements.
Connecting input power	Describes the correct sequence for power connection.
Connecting antennas and RF configurations	Describes setting up antenna connections and sample RF configurations.
Interface cabling	Describes cabling to the interface panel.

E1/T1 line testing

If an E1/T1 line has been provided, contact the local MSC and, at the earliest opportunity, arrange to test the line back to the MSC.

Cabinet view

Figure 3-1 shows a filled cabinet, with main components identified, doors and lid omitted for clarity.

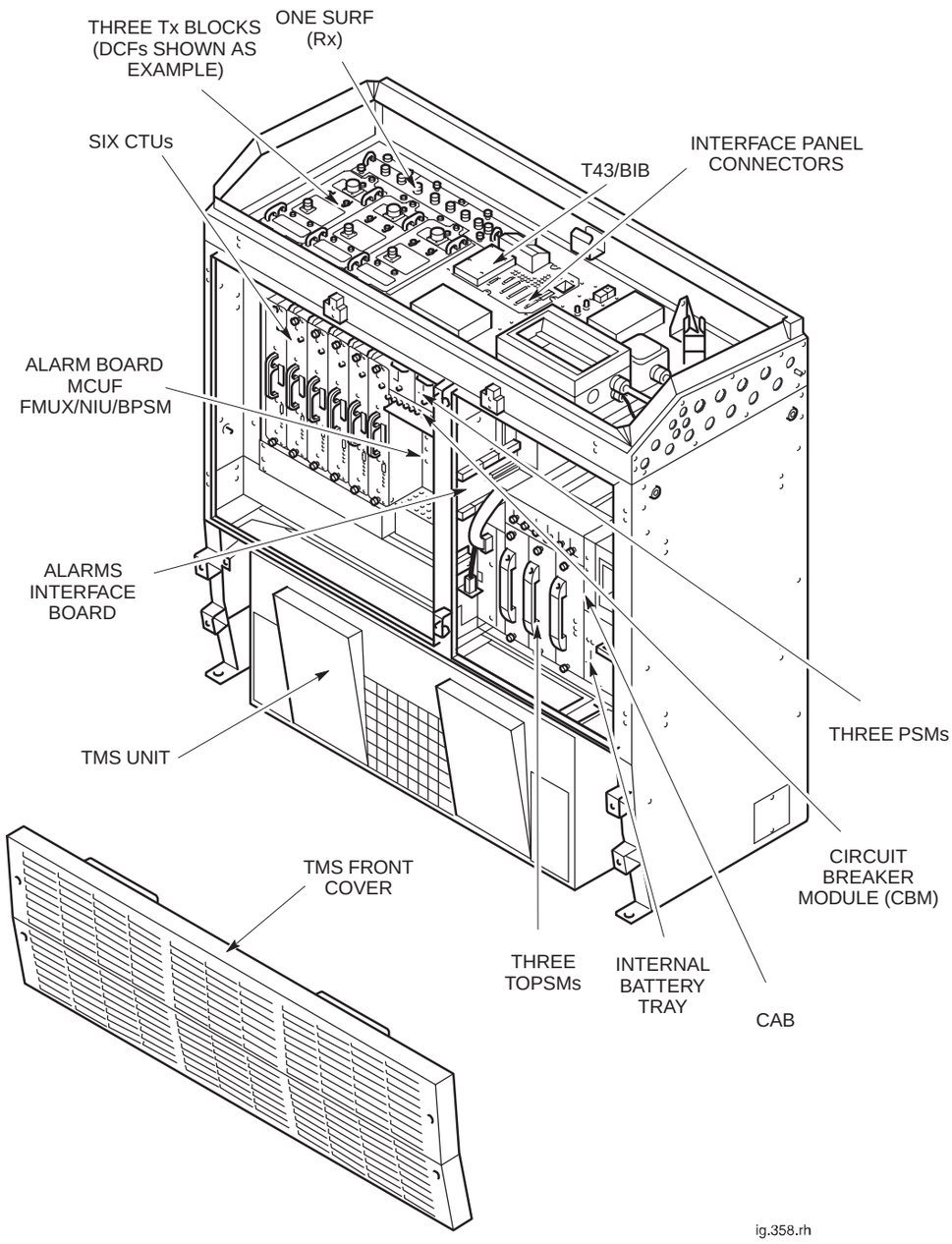

Figure 3-1 Cabinet with components identified (door and hood removed)

Equipment package units

The cabinet equipment is supplied already fitted to the cabinet. The only exceptions to this are:

- Installation template, (supplied with cabinet).
- Cable shroud (this is optional equipment).
- Auxiliary equipment housing (this is optional equipment).
- Equipment to be installed in the auxiliary equipment housing, (this is optional equipment).
- Installation anchor bolts, eye bolts and small fixing screws, (not supplied).

Cabinet equipment

Horizon*macro* cabinet equipment fitted and tested prior to shipping includes:

- CTU modules.
- Digital modules.
- Power distribution and alarm interface equipment.
- Internal batteries.
- Thermal management system.
- All intra-cabinet cabling, (RF and fibre optic).
- Comms cables and power cable feed-through glands.
- Cable assembly BIB to krone block.
- Any additional blanks, (CTU, RF, digital module, TOPSM or PSM).

Items not supplied with Horizon*macro*

The installer must supply the following equipment:

- 4 x M16 collared eye bolts (minimum rating 400 kg each).

  Bolts must be manufactured to CE conformity.
- Number 10 screws and expanding plastic plugs.
- 4 x M12 anchor bolts and expanding anchors.

Equipment delivery and packaging

Delivery and packaging overview

Before the cabinet equipment arrives, installation personnel should designate an area at the site where the equipment can be unloaded. This area should also be suitable for unpacking the equipment, if necessary. Consult with the heavy freight or moving company and the owners of the site to select this area.

CAUTION	The cabinet equipment should be delivered to the site while still contained in its packaging. This is to protect the cabinet from damage and moisture whilst in transit.

The equipment should be carefully delivered to the site by the freight company, along with the necessary moving dollies and padding. Use the dollies and padding to move the equipment from the unloading area to the installation point.

NOTE	Keep all paperwork, whether attached to the packaging or found inside the cabinet.

Packaging

The equipment cabinets are shipped in crates of a similar construction to that shown in Figure 3-2.

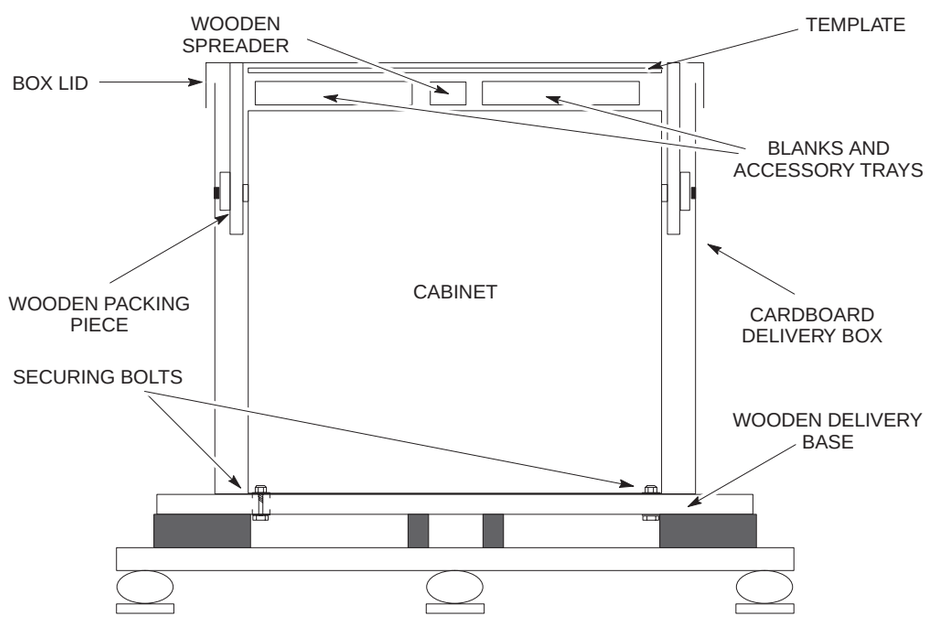

Figure 3-2 Typical shipping crate

Weather conditions affecting unpacking/installation

Overview of weather considerations

Before beginning the unpacking/installation process, it is important to read and take into account the following information concerning the climatic conditions at the intended site.

Weather conditions

WARNING	Due consideration should be given to the hazards of wind and other inclement weather conditions when installing the Horizon*macro* equipment. This is especially important when using a ladder to gain access. Use your discretion at all times. **Do not climb a ladder, scaffolding, or use some other similar method of access, if you feel unsafe to do so under these weather conditions**. Do not attempt to open the cabinet doors if the wind speed exceeds 25 knots (30 mph).

Maintenance cover

Motorola recommend the use of a maintenance cover for access to the Horizon*macro* cabinets during inclement weather conditions.

NOTE	The maintenance cover is not supplied with the Horizon*macro* equipment and should be provided by the customer, if required.

Installation and configuration procedures for the Horizon*macro* cabinets are dependent on the weather conditions. There are three situations where the recommended guidelines should be considered before commencing work:

- No access.
- Access with maintenance cover.
- Access without maintenance cover.

No access

Access should **not** be attempted to the cabinets during the following actual or imminent inclement weather conditions, with or without the maintenance cover:

- Winds in excess of 25 knots (30 mph).
- Heavy persistent rain, snow, hail or sleet.
- During an electrical storm.

Access with maintenance cover

Access may be made to the cabinet under the following conditions with the use of the maintenance cover:

- Wind speeds of less than 25 knots (30 mph).
- Persistent rain, snow, hail or sleet.
- Where airborne substances (such as leaves or dust) may cause a problem.

Access without maintenance cover

Access may be made under the following conditions without the use of the maintenance cover:

- Wind speeds of less than 25 knots (30 mph).
- No precipitation occurring or likely to occur during the maintenance period.
- When the temperature is between –30 °C to 40 °C.

Under these conditions the cover of the cabinet may be removed.

Unpacking and preparing the cabinet

Tools

Use these tools to unpack, prepare and fit the cabinet:

Knife.
Screwdriver set.
Spirit level.
Socket set.
280 mm adjustable spanner.
Torque wrench.
Lifting straps and 4 x M16 collared eyebolts and suitable hydraulic lifting gear.

Safety considerations

For each of the cabinets to be installed, consider the following notes:

WARNING	Fully equipped Horizon*macro* outdoor BTS cabinets can weigh up to 360 kg. Handle cabinets with extreme caution, and in accordance with any local health and safety regulations. Horizon*macro* cabinets are heavy and should not be installed without the use of lifting equipment unless sufficient personnel are available to ensure that Health and Safety regulations are not breached. Horizon*macro* outdoor cabinets are fitted with four lifting points, designed to accommodate M16 eyebolts, built into the cabinet sides. Eyebolts used to lift the cabinet must be of the collared type, must be manufactured to CE conformity, and must have a safe working load of 400 kg each. Eyebolts, must be visually checked for damage before use. If any damage is apparent, DO NOT USE. The eyebolts must not be overtightened; hand tight is sufficient. Motorola recommend the use of slings in conjunction with hydraulic lifting apparatus for moving and positioning Horizon*macro* cabinets. In addition to these points, refer to and comply with any local regulations that govern the use of lifting equipment.

For the subsequent use of eyebolts, there may be local regulations that govern the use of lifting equipment and stipulate a test and/or examination regime. If the eyebolts are to be used, ensure that all such regulations are met.

The installation support procedures are described in the following sections.

Cabinet access procedures

Cabinet access procedures include:

- Door and lid opening and closing.
- TMS front cover removal and refitting.

Door opening and closing

The door lock has a spring loaded handle. The door is operated as follows:

1. Insert key into lock and turn clockwise until spring loaded handle releases.
2. Turn handle a quarter turn anti-clockwise to open the lock.
3. Open power supply enclosure door to 90° locking position.
4. Open radio enclosure door to 90° locking position.

NOTE	If the equipment is active, a door open alarm will be generated.

5. To open doors to 120°, lift up middle of appropriate wind stop.
6. To close, lift up middle of wind stop, close doors firmly, radio enclosure door first.
7. Turn handle a quarter turn clockwise, push handle flush and remove key to lock the door.

Lid opening and closing

NOTE	The lid can only be opened and closed when both doors are open.

The lid is opened as follows:

1. Ensure both cabinet doors are open to the 90° position.
2. Undo the two draw latches by turning anti-clockwise, and ensure the catch hook is clear of lip on the lid.
3. Lift the lid until the mechanical stay audibly locks.

The lid is closed as follows:

1. Press the lock stud on the mechanical stay to release.
2. Lower the lid.
3. Hook the draw latches over the lip and turn clockwise to lock.
4. Ensure operating tab is stowed flat.

TMS front cover removal and refitting

To remove the TMS front cover:

NOTE	The TMS front cover can only be removed and refitted when both doors are open.

1. Remove and retain the four push in plastic covers.
2. Using a cross point screwdriver, undo the four captive fasteners by turning anticlockwise until they release.
3. Lift the TMS front cover away from the cabinet and store safely.

To refit the TMS front cover:

1. Refit the TMS front cover and line up the four fasteners.
2. Using a cross point screw driver, tighten the four captive fasteners.
3. Refit the four push in plastic covers.

Procedures for unpacking and preparing the cabinet

The following describes the procedure for unpacking the equipment.

NOTE	It is recommended that the installer reads through the following procedure before starting to unpack and install the equipment.

Dismantling the shipping packaging and obtaining template

To dismantle the shipping packaging and obtain template:

1. Cut the plastic banding that secures the packaging.
2. Lift the lid free of the box.
3. Remove separate template from the inside of the box lid, and deliver to the site for site preparation.
4. Remove the wooden spreader and the blanks and accessory trays from the box.
5. Undo the taped fastening on the box side.
6. Unwrap the box from around the cabinet, (the wrap-around box is secured by velcro).
7. Unbolt the two wooden packing pieces from the lifting points in the cabinet sides.

The cabinet is now ready to be prepared for lifting.

Preparing the cabinet for lifting

WARNING	The cabinet can weigh up to 360 kg. Handle with extreme caution, and in accordance with local health and safety regulations.

To prepare the cabinet for lifting and remove it from the wooden delivery base:

CAUTION	Care must be taken to avoid damaging the cabinet in any way, especially by scratching the outer surfaces.

1. Carefully remove the cling wrap surrounding the cabinet.
2. Inspect the equipment immediately for damage. Report the extent of any damage to the transport company.
3. Insert the eyebolts into the threaded lifting points on the cabinet sides, ensuring that no cross-threading occurs.

WARNING	Before attempting to insert the eyebolts, visually check each one for damage. If any damage is apparent, DO NOT USE. Do not overtighten the eyebolts; hand tight is sufficient. **Do not tighten eyebolts with a t-bar or spanner.** Screw the eyebolt fully into the lifting point so that no thread is left exposed.

4. Attach lifting straps to the eyebolts and connect to lifting gear.
5. Open the cabinet doors and remove the TMS front cover (see **Cabinet access procedures** this section) and the two rear mounting bolt cover plates and store safely.
6. Refer to **Figure 3-2** and remove the four nuts securing the cabinet to the wooden delivery base.
7. Unscrew the securing bolts from underneath the wooden delivery base until they are clear of the cabinet.

CAUTION	The cabinet may be subject to bending and distortion during installation. To minimize this the TMS front cover must be fitted and the cabinet doors must be closed, before lifting the cabinet.

8. Refit the TMS front cover and close the cabinet doors.

Visual inspection

After unpacking and preparation for lifting carry out a visual inspection on:

Cabinet exterior

Examine the exterior of the cabinets for structural, paint or mechanical damage and report any damage to Motorola.

Cabinet interior

Examine the interior of the cabinet for structural, paint or mechanical damage and report any damage to Motorola.

The cabinet can now be lifted gently and manoeuvred to the concrete base.

Safe disposal of packing material

The packing material used by Motorola is non-returnable, and should be disposed of safely.

CTU module allotted slot retention

CTUs are supplied already fitted into the cabinet, with Tx cable correctly attached at the factory. The CTUs must remain in the allotted slots for factory calibrations to be valid.

Installing the template and mounting bolt anchors

Introduction to template and mounting bolt anchor installation

The Horizon*macro* outdoor BTS cabinet is supplied with an alloy template. The template is installed before the cabinet to show the locations of the cabinet mounting bolt anchors. There is no need to remove the template after installation of the expanding bolt anchors.

View of template

Figure 3-3 shows the template used in installing the Horizon*macro* outdoor cabinet.

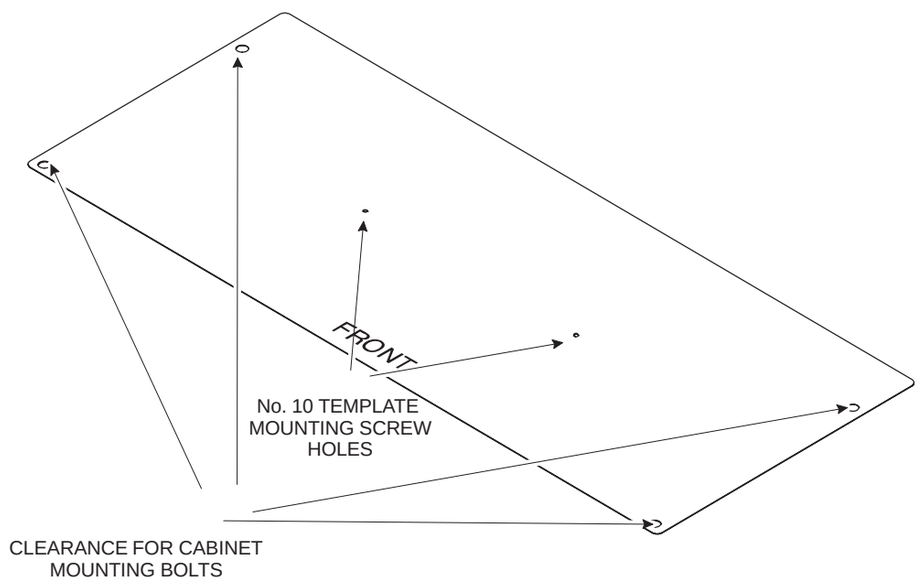

Figure 3-3 Horizon*macro* outdoor template

Procedure for installing template

The template must be secured to the concrete base before drilling the mounting holes for the M12 anchor bolts.

1. Move the cabinet template to the selected mounting position.
2. Mark the positions of the two template mounting screw holes in the template.

WARNING	Wear safety glasses and a dust mask when drilling holes.

CAUTION	Drilling concrete flooring produces cement dust, which is harmful to equipment and wiring. Protect the cabinets and any nearby equipment from dust. Use a tarpaulin, cloth, or plastic sheeting to cover exposed equipment. Clean up any accumulated debris from the anchor installation carefully before exposing the equipment. Use drilling equipment suitable for cutting steel reinforced concrete.

3. Drill out the two holes to a depth and clearance for No. 10 screws.
4. Fit plastic expanding plugs into the mounting holes.
5. Position the template over the mounting holes and secure using No. 10 screws.
6. When satisfied that the template is correctly installed, carry out procedure for installing the cabinet anchor bolts.

Recommended bolt length for concrete base

The length of the M12 steel anchor bolts must be determined by a structural engineer, but must be of sufficient strength to withstand 105 knot (120 mph) winds on the cabinet front or rear for a maximum gross weight of 360 kg.

Procedure for installing cabinet bolt anchors

The concrete base must be drilled to accept the M12 anchor bolts. Washers, bushes and M12 steel bolts must be supplied by the customer.

WARNING	Wear safety glasses and a dust mask when drilling holes.

CAUTION	Drilling concrete flooring produces cement dust, which is harmful to equipment and wiring. Protect the cabinets and any nearby equipment from dust. Use a tarpaulin, cloth, or plastic sheeting to cover exposed equipment. Clean up any accumulated debris from the anchor installation carefully before exposing the equipment. Use drilling equipment suitable for cutting steel reinforced concrete.

1. Using the four holes in the template as a guide, drill the concrete base to a depth and clearance for the M12 anchor bolts.
2. Fit the M12 mounting anchors to the holes in the base.
3. Fit the anchor bolts with the supplied bushes and washers, through the template, to each anchor.
4. Tension up the anchor bolts to expand the anchors.
5. Remove and retain the M12 bolts and washers for later use.

Fitting the outdoor cabinet onto its base

Procedure for fitting a BTS cabinet

To fit a Horizon*macro* outdoor BTS cabinet onto a prepared concrete base, (or steel structure):

WARNING	An equipped Horizon*macro* BTS cabinet can weigh up to 360 kg. Observe proper lifting precautions and handle each cabinet with extreme caution to avoid tipping.

1. Place the Horizon*macro* outdoor BTS cabinet onto the template, (or steel structure).
2. Open the cabinet doors and remove the TMS front cover see **Unpacking and preparing the cabinet (cabinet access procedures)**.
3. Line up the fixing holes in the bottom of the cabinet with the previously installed anchors, (or holes in steel structure).
4. Place a flat washer onto each M12 mounting bolt and fit the four mounting bolts loosely. Do not tighten yet.
5. Use a spirit level to verify that the cabinet is level. If necessary, use shims to level the cabinet. Tighten up the mounting bolts to the correct torque, (the setting of torque value for M12 anchor screws/bolts depends on local supplies. Refer to the manufacturer's data for correct values).
6. Refit the bottom front panel and the two rear mounting bolt cover plates, previously retained.
7. Remove each of the eyebolts from their threaded holes (located on the sides of the cabinet), and return the eyebolts to the tool kit for future use.

Mounting additional cabinets

At this stage, additional Horizon*macro* outdoor BTS cabinets, optional cable shrouds and/or optional auxiliary equipment housings may be installed, depending on the site configuration (see **Site requirements and considerations**). Refer to Chapters 2, 4 and 5 in this category for information on installing, multiple cabinet layouts, cable shrouds and auxiliary equipment housings.

Earthing and transient protection

Site earthing

This part of the manual summarizes general procedures for earthing the site. Refer to the *Grounding guidelines for cellular radio installations 68P81150E62*, for detailed earthing information.

WARNING	Each cabinet must be earthed separately. Cabinets must **not** be daisy chained together.

- The cell site equipment must be earthed (in the same common earth point as its power source).
- Provision should be made for earthing the site before beginning the installation of the system cabinets. See **Earthing the site** in Chapter 2 of this Category.
- There is an earthing terminal (stud) located on the earth/connector plate on the cable entry side of each BTS cabinet, and auxiliary equipment housing.
- Refer to the site-specific documentation for detailed site earthing information.

Secondary transient and lightning protection

All E1/T1 lines connected to Motorola equipment have secondary transient protection as part of the BIB or T43 board. Ensure the receive and transmit antenna connections to the cabinet are fed through coaxial electromagnetic protection (EMP) devices.

CAUTION	The end–user is responsible for transient protection of the E1/T1 lines connected to Motorola equipment.

Connecting the internal batteries

Introduction to connecting the internal batteries

The Horizon*macro* outdoor cabinet is delivered with the internal batteries disconnected (for safety reasons).

CAUTION	The batteries must be reconnected before external ac power is connected to the cabinet.

Internal battery connection procedure

To connect the internal batteries (refer to Figure 3-4):

1. Ensure battery circuit breaker is set to off.
2. Undo the two battery tray retaining screws and pull the tray forward until the two battery cables and the battery sense lead (4-way Molex connector) can be accessed.
3. Remove the heatshrink sleeves from the battery cable terminations. Connect the blue cable to the bottom breaker terminal and the black cable to the front (red) positive terminal.
4. Ensure the four battery sense leads are connected as shown in Figure 3-4 and plug the black Molex 4-way connector into its socket on the battery retaining strap.
5. Push the tray back into the cage and tighten the retaining screws.

View of internal battery tray

Figure 3-4 shows a view of the internal battery tray.

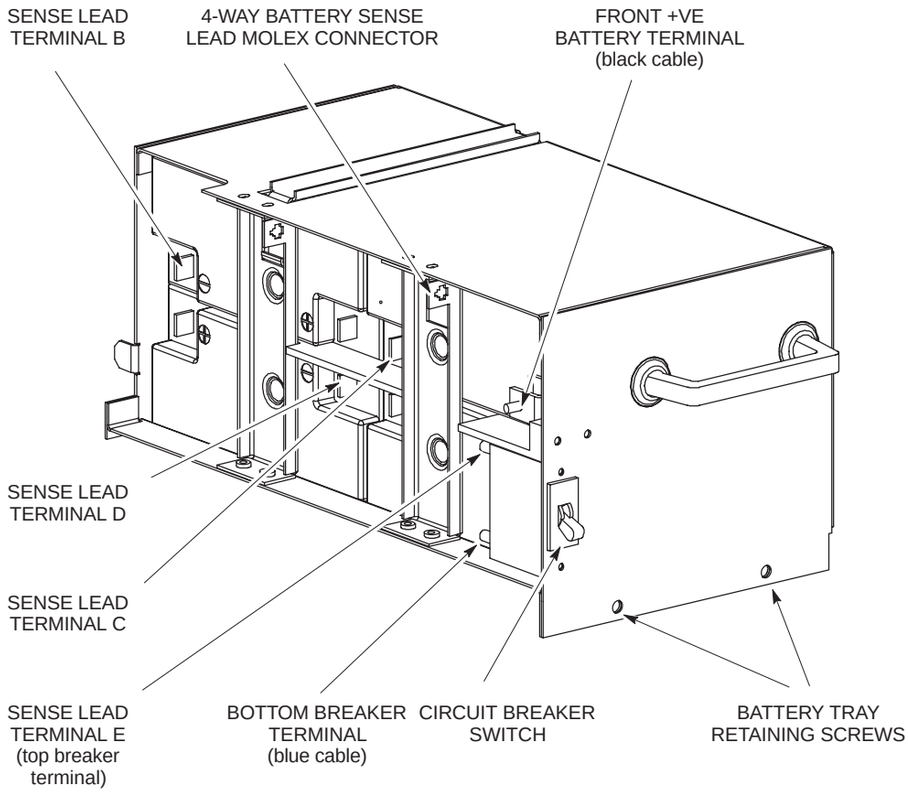

Figure 3-4 Making the connections on the internal battery tray

Installing and connecting power and earth cabling

Overview of power and earth cabling

On delivery, the Horizon*macro* outdoor BTS cabinet is configured for a 230 V ac single phase power supply. The possible configurations of ac power supplies are:

- Single phase (110 V).
- Single phase (230 V) – default configuration.
- Three phase star (230 V).
- Three phase delta (230 V).

This section describes the procedures for connecting power and earth cabling to the cabinet.

WARNING	Do not daisy chain cabinet earths together. Do not make ac input power connections at the main power source at this time. **Connecting input power** is the final installation procedure, carried out as part of commissioning in Chapter 6 of this category. Cabinets must be earthed with a conductor capable of carrying the full fault current of the overcurrent protection device.

Power specifications can be found in Chapter 2 **Site requirements and considerations**.

Cable routeing

CAUTION	Ensure that covers are fitted to any unused connectors on the cabinet interconnect panel. The covers protect the connectors from damage by static electricity or foreign matter.

Adequate means should be provided for routeing cables from the main power source to the equipment, such as a cable trough or conduit.

NOTE	The current-carrying capacity of a cable for continuous service is affected by all of the following factors (references: IEC 364, BS7671): – Ambient temperature. – Grouping. – Partial or total enclosure in thermal insulating material. – Frequency (ac only).

Cabinet earthing points

The main earth connection point is located on the earth/connector plate on the cable entry side. This connection is for protective earthing, lightning protection and functional earthing of the cabinet.

To earth the BTS cabinet:

1. Ensure the M8 chassis earth studs, located in rear corners of the top section, are connected to the BTS cabinet earth plate.
2. Connect the earth plate stud to the site earth using a 35 mm^2 cross-sectional area, green and yellow sheathed, stranded conductor.

Additional internal earths are:

- Two M8 chassis earth studs, located in rear corners of the top section.
- Number 1 ac distribution box in the top section.
- Number 2 ac distribution box in the power supply unit (PSU).
- PSU cage earth stud, located behind the number 2 ac distribution box.
- An M6 threaded stud on the top interface panel, adjacent to the dc input.
- Main cage to underside of interface panel above PSM.
- AC socket to underside of interface panel at rear of panel.
- Earth bonding from doors and lid to the cabinet chassis.
- Earth bonding from the TMS heat exchanger to the cabinet chassis.

Power supply cable colour coding

To connect an outdoor cabinet to the EXTERNAL ac power source, observe the following rules.

Single-phase supply

For single-phase ac connections:

- The **line** power cable is **brown** or **red**.
- The **neutral** cable is **blue** or **black**.
- The **earth** cable is **green and yellow**.

Three-phase supply

For three-phase ac connections:

- The **phase A** power cable is **red**.
- The **phase B** power cable is **blue**.
- The **phase C** power cable is **yellow**.
- The **neutral** cable is **black**.
- The **earth** cable is **green and yellow**.

Preparing for connection

To prepare for connecting ac power cables to an Horizon*macro* outdoor cabinet:

1. Unscrew the four captive securing screws and remove and retain number 1 ac distribution box insulated cover.
2. Disconnect and remove the remains of the factory test cable from the number 1 ac distribution box.
3. Tighten all screws disturbed in step 2.
4. Position the screened power cable, complete with earth, in a conduit. Route the conduit to the ac power outlet point.
5. Feed the ac power cable into the Horizon*macro* cabinet through the AC IN hole in the earth plate (see Figure 3-5) and through one of the supplied cable glands. From the outside of the cabinet, push the cable gland (with the sealing ring) into the AC IN hole, and from the inside, fit the earth tag and secure with the locking nut.

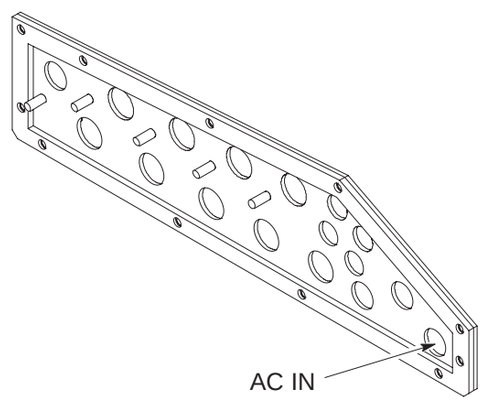

Figure 3-5 Earth plate, showing location of entry hole for ac supply cable

Connecting 230 V single phase ac power cables

Configuring the number 1 ac distribution box

WARNING	Ensure that the mains input isolator is set to position **O** (off) and source is isolated before proceeding.

On delivery, the Horizon*macro* outdoor BTS cabinet is configured for a 230 V ac single phase power supply.

If connecting to a single phase 230 V ac supply, no configuration of the number 1 ac distribution box is required.

Connecting 230 V ac single phase mains input cables

CAUTION	230 V single phase link is fitted to the four pole MCB and must remain fitted for safety requirements.

To connect a 230 V earth, live, and neutral power cable to the number 1 ac distribution box:

1. Connect the ac power input earth cable (green/yellow) to terminal 1 of the earth terminal block in the number 1 ac distribution box, and check the connection of the cabinet earth cable to terminal 2. Secure both cables.
2. Secure the screen at the cabinet entry gland.
3. Connect the live ac cable (brown or red) to linked terminals B2, C2, D2 of the four pole MCB in the number 1 ac distribution box, and secure.
4. Connect the neutral ac cable (blue or black) to terminal A2 of the four pole MCB in the number 1 ac distribution box, and secure.
5. Check the security of all connections within the number 1 ac distribution box.
6. Refit the previously retained cover of the number 1 ac distribution box.

230 V ac single phase wiring diagram

Figure 3-6 shows the wiring diagram for the number 1 ac distribution box when configured for a 230 V ac single phase power supply.

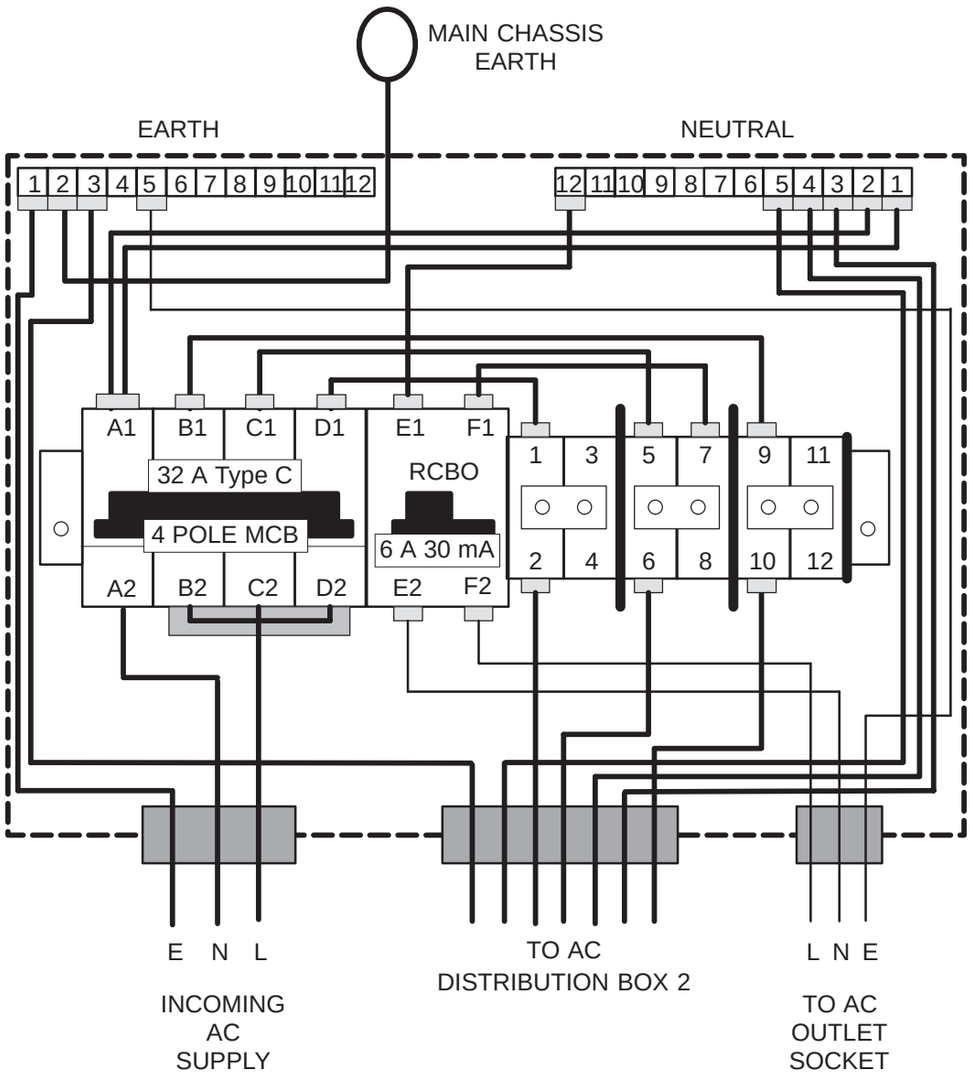

Figure 3-6 Wiring diagram (230 V ac single phase)

Connecting 110 V single phase ac power cables

Configuring the number 1 ac distribution box

WARNING	Ensure that the mains input isolator is set to position **O** (off) and source is isolated before proceeding.

On delivery the Horizon*macro* outdoor BTS cabinet is configured for a 230 V ac single phase power supply.

If connecting to a single phase 110 V ac supply configure the number 1 power distribution box as follows (refer to Figure 3-7):

1. Retain the single phase link fitted across terminals B2, C2 and D2 on the four pole MCB.
2. Disconnect the neutral cables from Terminal A1 of the four pole MCB.
3. Disconnect and remove the neutral cables from terminals 1 and 2 on the neutral terminal block.
4. Tighten all screws disturbed in this procedure.

NOTE	Pole A of the four pole MCB is not used in 110 V ac configurations.

The procedure for configuring the number 1 distribution box for 110 V operation is now complete.

Connecting 110 V ac single phase mains input cables

To connect a 110 V ac earth, live, and neutral power cable to the number 1 ac distribution box:

1. Connect the mains input earth cable (green/yellow) to terminal 1 of the earth terminal block in the number 1 ac distribution box, and check the connection of the cabinet earth cable to terminal 2. Secure both cables.
2. Secure the screen at the cabinet entry gland.
3. Connect the neutral cable (blue or black) to terminal 1 of the neutral terminal block in the number 1 ac distribution box, and secure.
4. Connect the live cable (brown or red) to linked terminals B2, C2 and D2 of the four pole MCB in the number 1 ac distribution box, and secure.
5. Check the security of all connections within the distribution box and then refit the previously retained cover.

110 V ac single phase wiring diagram

Figure 3-7 shows the wiring diagram for the number 1 ac distribution box when configured for a 110 V ac single phase power supply.

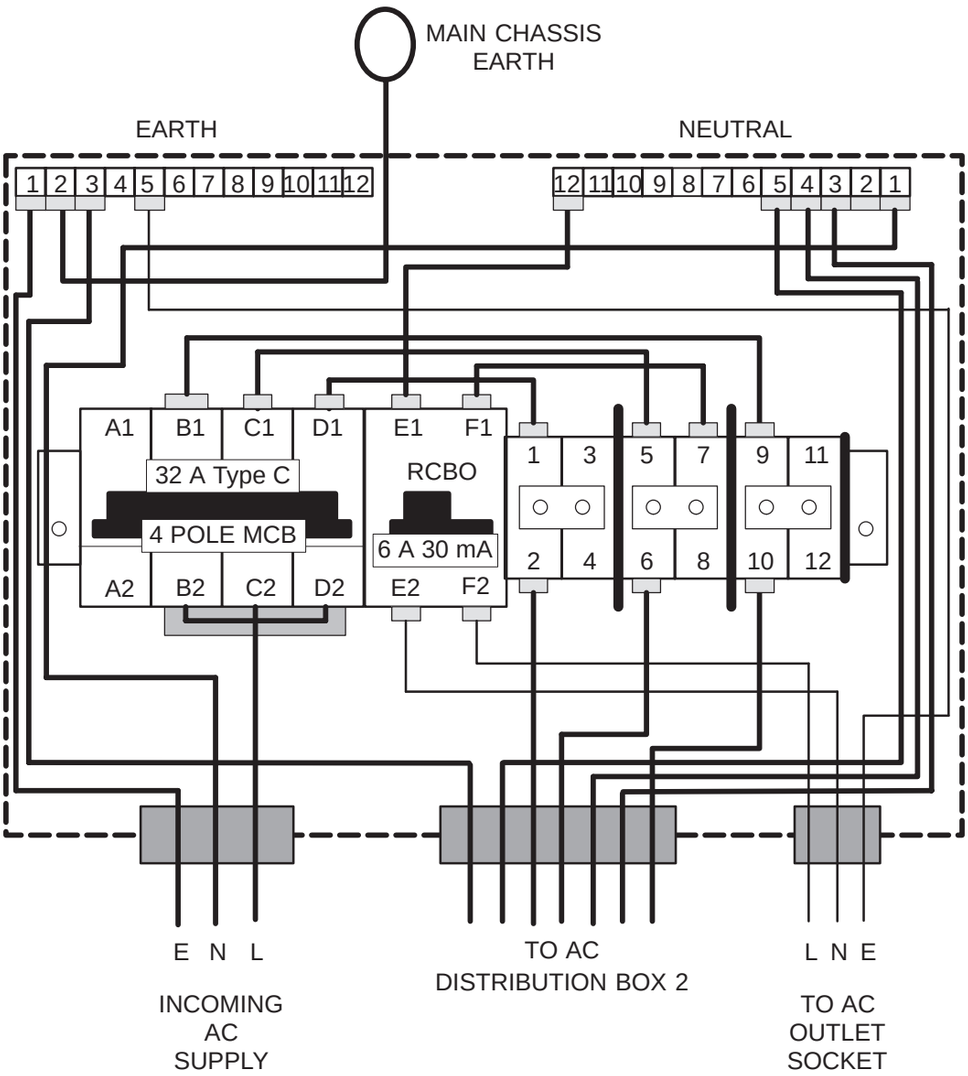

Figure 3-7 Wiring diagram (110 V ac single phase)

Connecting 230 V 3-phase (star) ac power cables

Configuring the number 1 ac distribution box

WARNING	Ensure that the mains input isolator is set to position **O** (off) and source is isolated before proceeding.

On delivery the Horizon*macro* outdoor BTS cabinet is configured for a 230 V ac single phase power supply.

If connecting to a three phase and neutral (star) 230 V ac supply, remove the 230 V single phase link fitted to terminals B2, C2 and D2 on the four pole MCB before proceeding further.

Connecting 230 V ac 3-phase (star) mains input cables

To connect the earth, 3-phase (star), and neutral power cables to the number 1 ac distribution box:

1. Connect the mains input earth cable (green/yellow) to terminal 1 of the earth terminal block in the number 1 ac distribution box, and check the connection of the cabinet earth cable to terminal 2. Secure both cables.
2. Secure the screen at the cabinet entry gland.
3. Connect the neutral cable (black), to terminal A2 of the four pole MCB in the number 1 ac distribution box, and secure.
4. Connect the phase 1 cable (red), to terminal D2 of the four pole MCB in the number 1 ac distribution box, and secure.
5. Connect the phase 2 cable (yellow), to terminal C2 of the four pole MCB in the number 1 ac distribution box, and secure.
6. Connect the phase 3 cable (blue), to terminal B2 of the four pole MCB in the number 1 ac distribution box, and secure.
7. Refit the previously retained cover of the number 1 ac distribution box.

230 V ac 3-phase (star) wiring diagram

Figure 3-8 shows the wiring diagram for the number 1 ac distribution box when configured for a 230 V ac 3-phase and neutral (star) power supply.

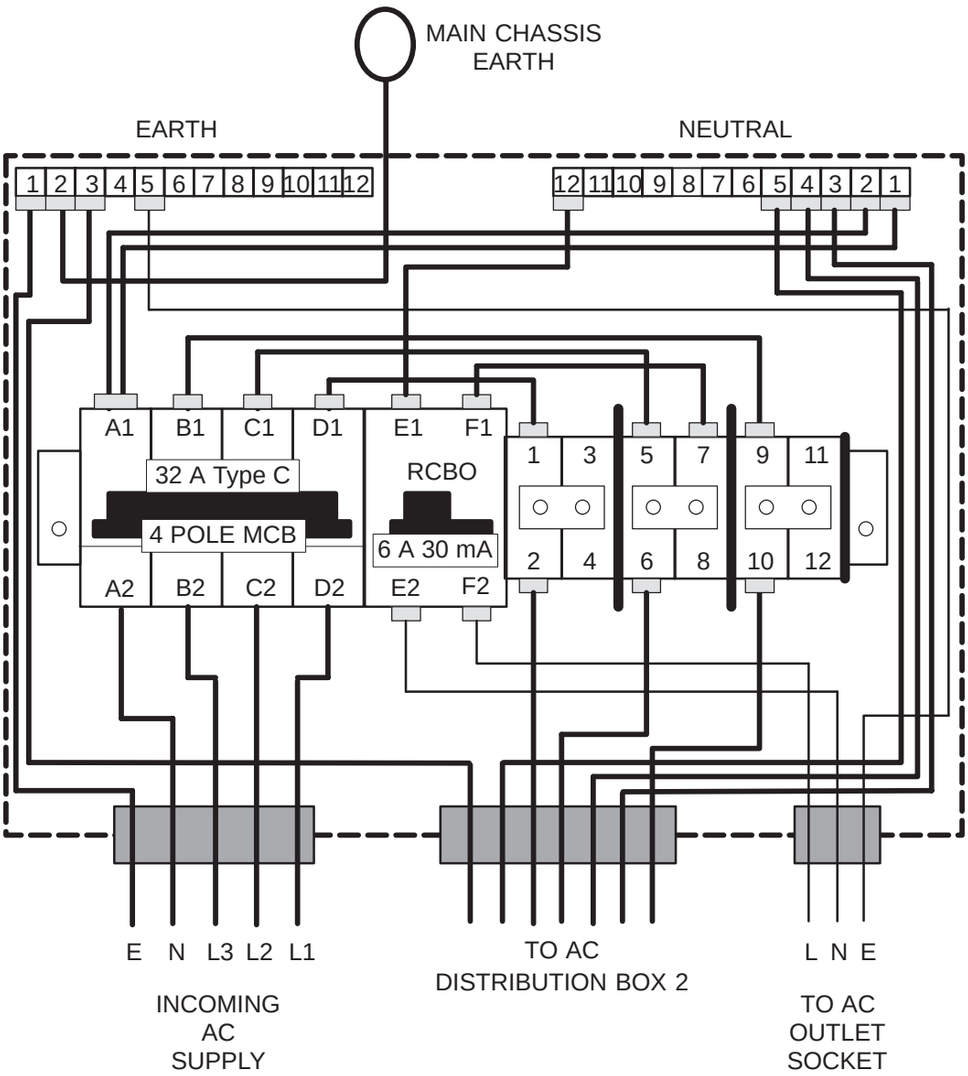

Figure 3-8 Wiring diagram for 230 V ac 3-phase (star)

Connecting 230 V 3-phase (delta) ac power cables

Configuring the number 1 ac distribution box

WARNING	Ensure that the mains input isolator is set to position **O** (off) and source is isolated before proceeding.

On delivery the Horizon*macro* outdoor BTS cabinet is configured for a 230 V ac single phase power supply.

If connecting to a 230 V 3-phase (delta) ac supply, configure the number 1 power distribution box as follows (refer to Figure 3-9):

1. Remove the wire from terminal 12 on the neutral terminal block and connect it to terminal 3 on the connector block.
2. Remove the wire from terminal 5 on the neutral terminal block and connect it to terminal 8 on the connector block.
3. Remove the wire from terminal 4 on the neutral terminal block and connect it to terminal 12 on the connector block.
4. Remove the wire from terminal 3 on the neutral terminal block and connect it to terminal 4 on the connector block.
5. Remove the 230 V single phase link fitted to terminals B2, C2 and D2 on the four pole MCB

The procedure for configuring the number 1 distribution box for 230 V 3-phase (delta) operation is now complete.

Connecting 230 V ac 3-phase (delta) mains input cables

To connect the earth, 3-phase (delta) cables to the number 1 ac distribution box:

1. Connect the mains input earth cable (green/yellow) to terminal 1 of the earth terminal block in the number 1 ac distribution box, and check the connection of the main chassis earth cable to terminal 2. Secure both cables.
2. Secure the screen at the cabinet entry gland.
3. Connect the phase 1 cable (red), to terminal D2 of the four pole MCB in the number 1 ac distribution box, and secure.
4. Connect the phase 2 cable (yellow), to terminal C2 of the four pole MCB in the number 1 ac distribution box, and secure.
5. Connect the phase 3 cable (blue), to terminal B2 of the four pole MCB in the number 1 ac distribution box, and secure.
6. Refit the previously retained cover of the number 1 ac distribution box.

230 V ac 3-phase (delta) wiring diagram

Figure 3-9 shows the wiring diagram for the number 1 ac distribution box when configured for a 230 V ac 3-phase (delta) power supply.

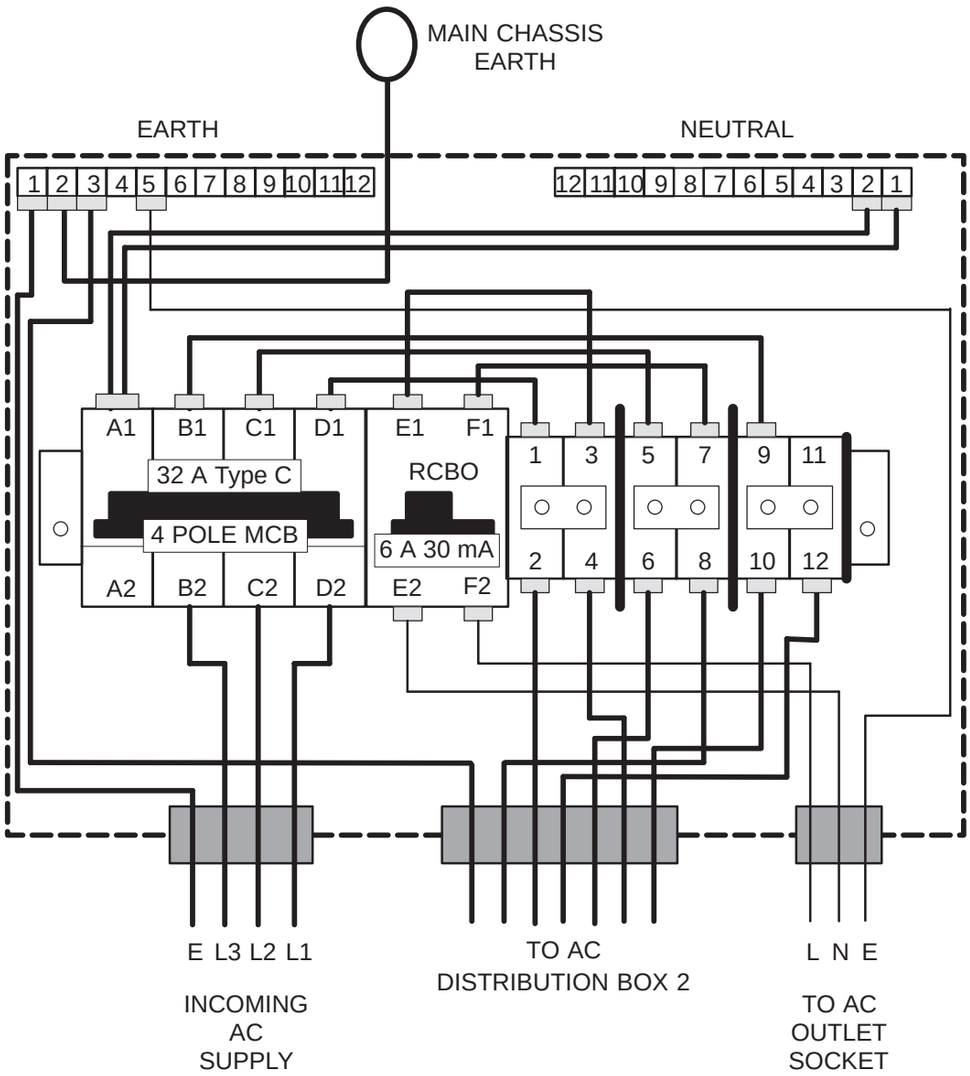

Figure 3-9 Wiring diagram for 230 V ac 3-phase (delta)

Connecting antennas

Overview of antenna connections

The components shown in Figure 3-10 provide all the RF connections to the cabinet and internally within the cabinet. Up to four cabinets can be interconnected to form a single BTS site.

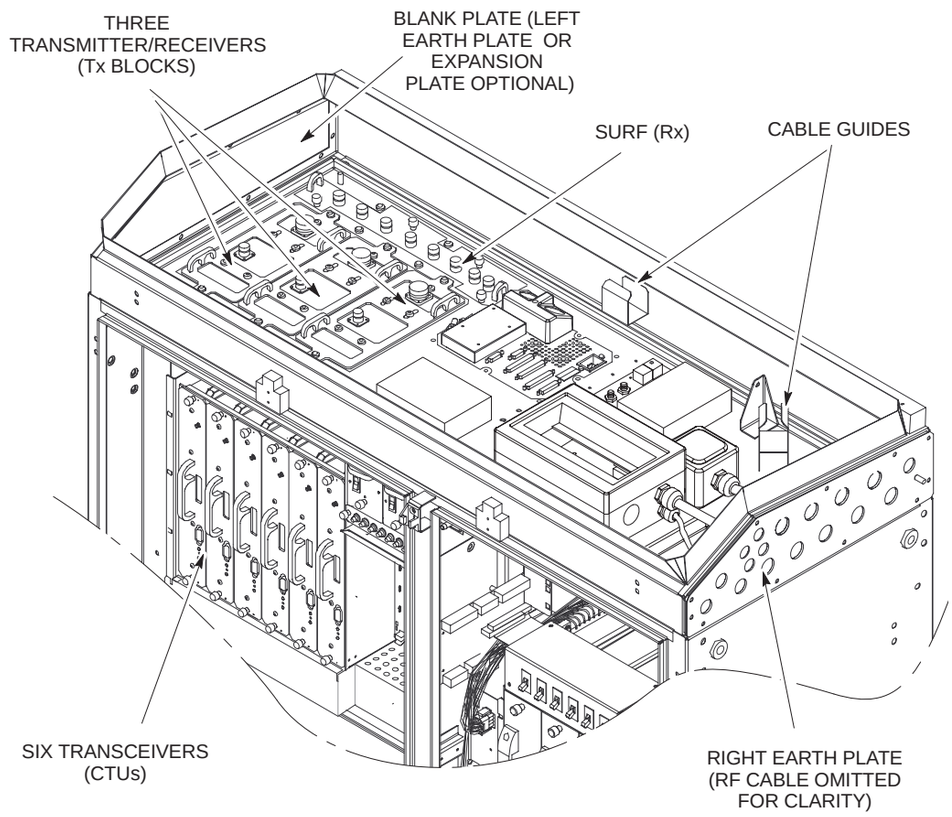

Figure 3-10 Location of RF components

Site configurations supplied by Motorola have appropriate earth, expansion or blanking plates fitted and all internal RF cables supplied. Antennas need only be connected to the earth/connector plate as all RF connections internal to the cabinet, (those between CTUs, Tx blocks, SURF and earth/connector plates), are cabled correctly for the cabinet configuration supplied.

Multiple cabinet configurations have additional RF cabling, stored, for shipping, in the master cabinet. These cables will need to be routed to the expansion cabinets and connected as shown in the **Suggested RF configurations** Variations in site layout and RF configuration may require the fitting of left side cable entry earth plates and/or expansion plates.

Cable entry earth plates

The standard cabinet is supplied with the earth/connector plate, with attached RF cables, located on the right side of the top section. If required, an optional earth/connector plate can be fitted on the left side of the top section instead.

Figure 3-11 shows the layout of the right earth/connector plate viewed from inside the top section (the layout for the left plate is a mirror image of this). The six permanently connected RF cables are omitted for clarity.

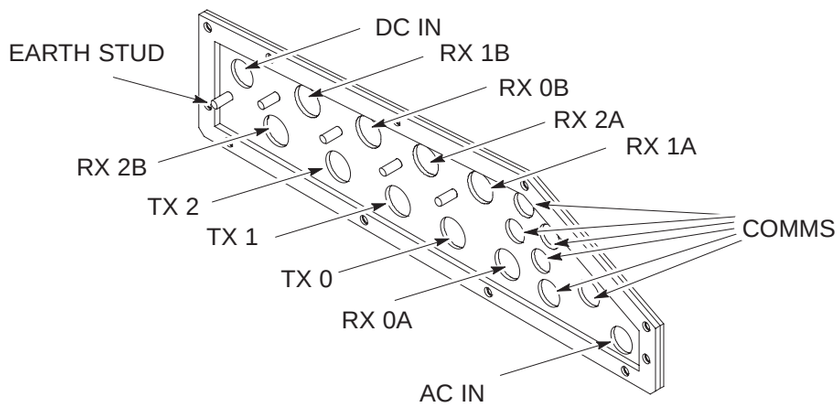

Figure 3-11 Diagram of left earth/connector plate connections

Fitting inter-cabinet RF cables to earth plates

When installing a multiple cabinet configuration or expanding an existing site it may be necessary to fit long RF cables to an existing earth plate. Extension RF cables are listed in Table 3-4 in this chapter.

To fit extension RF cables to an earth plate:

1. Remove the grey weather seal from an unused RF position, on the earth plate and discard.
2. Remove the nut and washer from the fixed bulkhead connector of the extetsion RF cable.
3. Feed the threaded portion of the bulkhead connector through the earth plate from the inside.
4. Refit the washer and nut to the bulkhead connector and tighten to the correct torque, (see **Site requirements and considerations** in Chapter 2 of this category).

Routeing RF cables between cabinets.

When routeing RF cables between cabinets in Motorola supplied configurations:

1. Remove the expansion plate pass through blanks, as required.
2. Undo the two hose clips securing each RF cable gland housing and remove gland assembly.
3. Feed any RF cables through the expansion plates.

Refer to **Cable shroud installation procedures** (Installation between cabinets and Cable routeing for multiple cabinet sites) in Chapter 4 of this category for full details of RF gland refitting and shroud installation.

Types of RF connector

Table 3-2 list the RF module connectors with their destinations.

Table 3-2 RF module connectors and destinations

RF module	Type of connector	Destination
CTU transceiver	SMA	Tx block (underneath)
Tx block	SMA	CTU transceiver
	N-type	SURF
	7/16	Earth/connector plate
SURF	N-type	Rx N-type of Tx Block
Earth/connector plate	7/16	Antenna or additional cabinets

Torque of RF connectors

For correct torque of connectors, see *Installation & Configuration: GSM-204-423* Chapter 2 **Site requirements and considerations**.

CAUTION	Care should be taken when tightening SMA connectors to avoid damage by excessive force.

Fitting left side (cable entry) earth plate

To fit the left side (cable entry) earth plate:

1. Remove and retain the eleven M6 anti-tamper Torx screws securing the left side blanking plate, (if fitted). Remove the blanking plate.
2. Fit left side (cable entry) earth plate and secure with previously retained Torx screws. Tighten securing screws to the correct torque (see **Site requirements and considerations** in Chapter 2 of this category).
3. Connect the short earth cable to the left side cabinet earth stud and tighten to the correct torque.
4. Route RF cables and long earth cable from left side earth plate through top section cable guides, indicated in Figure 3-10.
5. Remove the earth cable from the interface panel earth stud and fit long earth cable from left side earth plate. Tighten to correct torque (see **Site requirements and considerations** in Chapter 2 of this category).

CAUTION	Incorrect connection of RF cables could result in network planning and optimization difficulties, care must be taken to ensure that the correct RF configuration for the site is maintained.

6. Note the identification of the existing connections between the right earth plate and RF components. Disconnect each cable from the SURF module or Tx block, one at a time, and connect corresponding RF cable from left side earth plate, until all RF cables, appropriate for the desired RF configuration, are connected.
7. Disconnect the short earth cable from the right side cabinet earth stud.
8. Remove and retain the eleven M6 anti-tamper Torx screws securing the right side earth plate. Remove the right side earth plate, complete with cables.
9. Fit right side blanking plate and secure using with previously retained Torx screws. Tighten securing screws to the correct torque (see **Site requirements and considerations** in Chapter 2 of this category).

Fitting expansion plates

To fit an expansion plate:

1. Remove and retain the eleven M6 anti-tamper Torx screws securing the earth plate or blanking plate, (if fitted), and remove.
2. Fit the expansion plate and secure with previously retained Torx screws. Tighten securing screws to the correct torque (see **Site requirements and considerations** in Chapter 2 of this category).
3. To make the RF, dc power, fibre optic and signal connections between multiple cabinets, (see **Cable shroud installation procedures** in Chapter 4 of this category).

Figure 3-12 shows an expansion plate, with cable pass-through ports indicated.

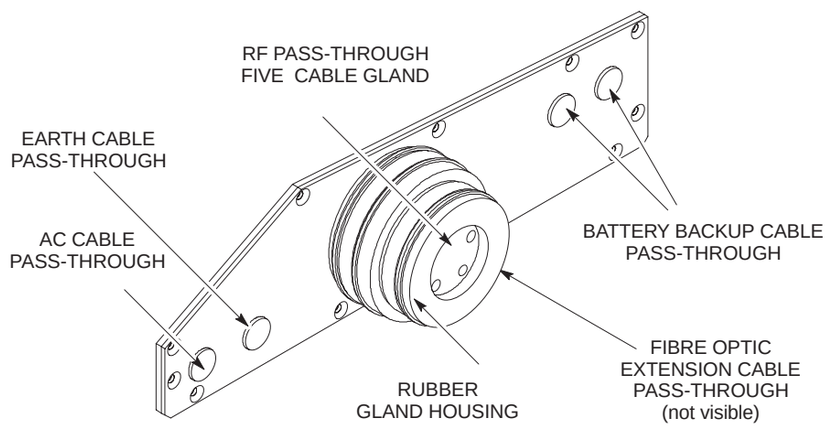

Figure 3-12 Expansion plate

RF connection principles

The primary receive path is connected to the A branch of the SURF module, either directly or from the Rx connector on the Tx block in non-diversity configurations. The diversity receive path is connected to the B path on the SURF. This is normally duplexed with the transmit signal on a single antenna, and fed to the SURF from the Rx connector on the Tx block. Within any single cabinet the lowest numbered sector is normally connected to amplifier 0 connections, and higher numbered sectors to amplifiers 1 and 2 as appropriate. For example, sector one is connected to SURF connectors 0A and 0B, sector two to 1A and 1B, and sector three to 2A and 2B. However, if a sector is split between two cabinets, the split sector antennas must be connected to amplifier 0, (this is the only path with connection to the extension ports). Extension ports must be connected to the correct branch at the destination cabinet.

The transmit path feeds from the CTUs to the Tx block or feedthrough plate immediately above. Two signals are combined in most Tx blocks, A third signal can be combined using a feedthrough plate and the third input of a DDF. The Tx blocks then duplex the Tx signal with the diversity Rx signal, before feeding to the antenna.

Rx/Tx single antenna duplexing

Duplexers allow a single antenna to be used for both transmit and receive operations. Duplexers exist within several of the transmit blocks. Normally duplexed RF signals are used through one antenna, with a second receive antenna to provide diversity.

NOTE	If a single antenna (non-diversity) is required, the duplex antenna RF receive cable from the transmit block must be connected to the Rx A path at the SURF. Simply switching off diversity at the OMC-R without the correct SURF configuration will cause a loss of reception.

Suggested RF configurations

Overview of configuration diagrams

The following series of RF configuration diagrams show suggested ways of connecting together Horizon*macro* SURF and Tx blocks to meet different operational requirements. The series of diagrams is by no means exhaustive, and numerous alternative configurations may be adopted to achieve the same aim.

Each Horizon*macro* cabinet is represented by a SURF module, three Tx blocks and an earth plate. In a standard cabinet the Tx blocks and SURF module are supplied connected to a right side entry earth plate, (left side cable entry requires fitting of optional earth plate kit). A blanking panel, or expansion plate (for multiple cabinet configurations), is fitted on the opposite side of the cabinet top section. Antenna connecting cables, not supplied as part of the Horizon*macro* equipment, connect to the outside of the earth plate. Interconnecting cables are not individually identified as different cables are used, dependant on physical layout.

With the exception of Figure 3-33 and Figure 3-34 the diagrams are applicable for single band operation at 850, 900, 1800 or 1900 MHz, although only the 1800 MHz SURF module is illustrated. Connections to the dual band 900 or 1800 SURF are identified in the same way as those to the single band SURF, with the addition of two extra connectors provided for dual band use.

Figure 3-33 shows one way of achieving dual band operation using two Horizon*macro* cabinets. A single band 1800 SURF is installed in one cabinet and a dual band 900 SURF in the other. Figure 3-34 shows another, using one of each type of dual band SURF.

NOTE	Dual band SURFs are not available for GSM850 or PCS1900 BTS variants.

Diversity is assumed in all the RF configuration diagrams shown here, except for Figure 3-14. Other non-diversity configurations can be derived from this figure by ensuring that the single receive path is always connected to branch A at the SURF module.

Digital connections

Digital connections between cabinets are not shown in the following diagrams. Fibre optic cables used to provide digital connections between cabinets are described in **Connecting fibre optic cables**.

Depopulated site configurations

The purpose of a depopulated site configuration is to allow customers to provide a future expansion capability, at the time of installation. The diagram showing the final target configuration is to be used to connect TX blocks, SURF and antennas. Depopulated site configurations are supplied with fully equipped RF section to achieve the target configuration, with CTUs only fitted to alternate slots. CTUs are fitted in slots 0, 2 and 4. Unused Tx block SMA connectors must be fitted with 50 ohm terminating loads.

Single cabinet connection kits and cables

Table 3-3 lists cable types and kits used for SURF/Tx block and antenna interconnections for a single cabinet.

Table 3-3 SURF/Tx block and antenna interconnecting kits and cables

Part number	Description	Use
3086225N01	34.5 cm coaxial cable terminated at either end with straight N-type plugs.	Tx block to SURF (inside cabinet)
3086225N02	28 cm coaxial cable terminated at one end with a straight N-type plug, and at the other end with a right-angle N-type plug.	Tx block to Tx block (inside cabinet)
SVLN1320	Left side entry earth plate kit contains three each of: – N-type to 7/16 bulkhead cables – 7/16 to 7/16 bulkhead cables	Interface between antenna cables and Tx blocks and/or SURF
SVLN1321	Right side entry earth plate kit contains three each of: – N-type to 7/16 bulkhead cables – 7/16 to 7/16 bulkhead cables	Interface between antenna cables and Tx blocks and/or SURF
SVLN1322	Left side blanking panel	Blank plate
SVLN1323	Right side blanking panel	Blank plate
SVLN1324	Left side expansion plate, with five cable gland	Multiple cabinet configurations
SVLN1325	Right side expansion plate, with five cable gland	Multiple cabinet configurations

Multiple cabinet connection kits and cables

Table 3-4 lists interconnection cable kits used in multiple cabinet layouts.

Table 3-4 Multiple cabinet interconnection kits

Part number	Description	Use
SVKN1313	3 m coaxial cable terminated at each end with N-type plugs. Intercabinet RF cable.	SURF to SURF in back to back layouts
SVKN1314	2 m coaxial cable terminated at each end with N-type plugs. Intercabinet RF cable.	SURF to SURF in side by side layouts
SVKN1315	2.15 m coaxial cable terminated at each end with N-type plugs. Intercabinet RF cable.	DDF to HCU in side by side layouts
SVKN1316	2 m coaxial cable terminated with an N-type plug at one end, and a 7/16 at the other. Intercabinet RF cable.	SURF to earth plate in left side of adjacent cabinet
SVKN1317	2.85 m coaxial cable terminated with an N-type plug at one end, and a 7/16 at the other. Intercabinet RF cable.	SURF to earth plate in right side of adjacent cabinet
SVKN1318	2.15 m coaxial cable terminated at each end with 7/16-type plugs. Intercabinet RF cable	Tx block to earth plate in left side of adjacent cabinet
SVKN1319	3 m coaxial cable terminated at each end with 7/16-type plugs. Intercabinet RF cable	Tx block to earth plate in right side of adjacent cabinet

Configuration for omni 1

Figure 3-13 shows a suggested configuration, using one Horizon*macro* cabinet, for omni 1 with twin duplexed filter.

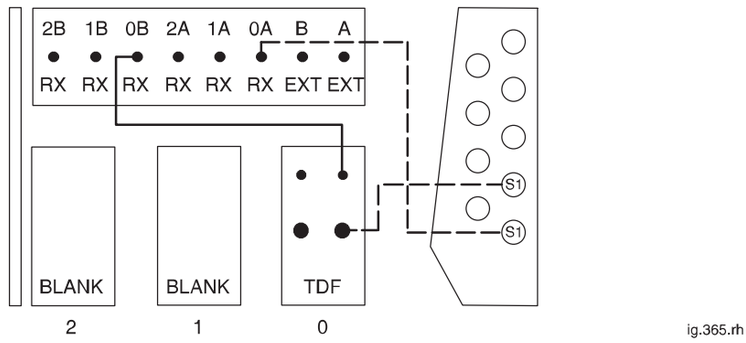

Figure 3-13 Single cabinet omni 1 with TDF

Configuration for omni 1 or 2 (with/without diversity)

Figure 3-14 shows suggested single Horizon*macro* cabinet configurations, with and without diversity, for omni 1 or omni 2 with duplexed combining bandpass filter.

CAUTION	If a single antenna (non-diversity) is required, the duplex antenna RF receive cable from the transmit block must be connected to the RxA path at the SURF. Simply switching off diversity at the OMC-R without the correct SURF configuration will cause a loss of reception.

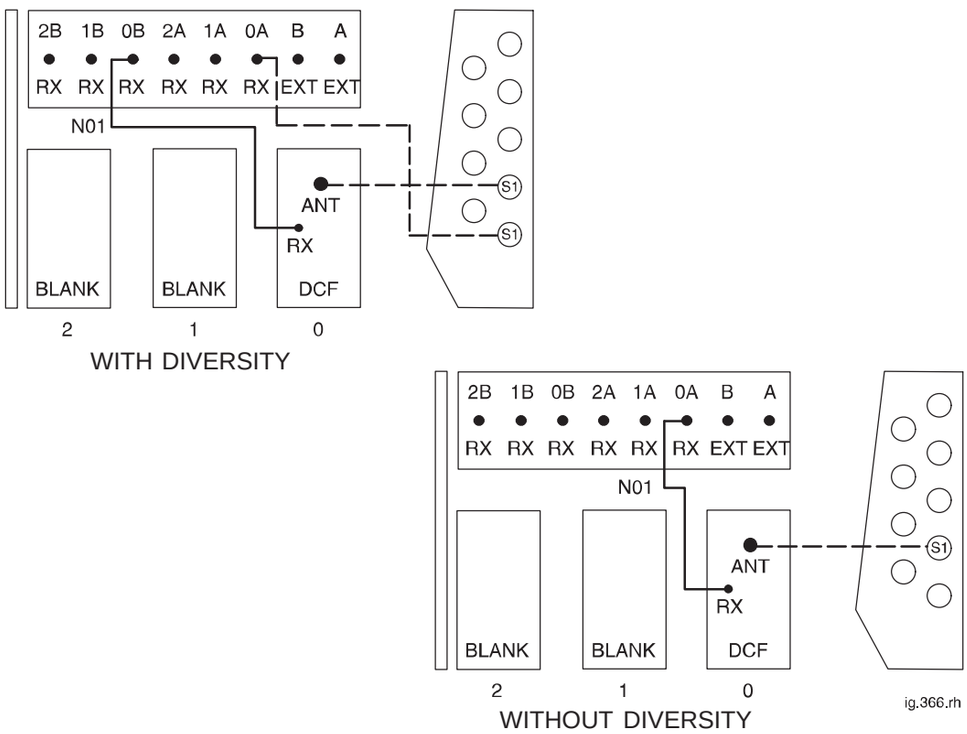

Figure 3-14 Single cabinet omni 1 or 2 with DCF

Unused SMA connectors must be fitted with 50 ohm terminating loads as shown below.

If configured for...	Then 50 ohm load required on unused SMA input to...
omni 1	DCF 0

Configuration for omni 3 or 4

Figure 3-15 shows a suggested configuration, using a single Horizon*macro* cabinet, for omni 3 or omni 4 with duplexed combining bandpass filter.

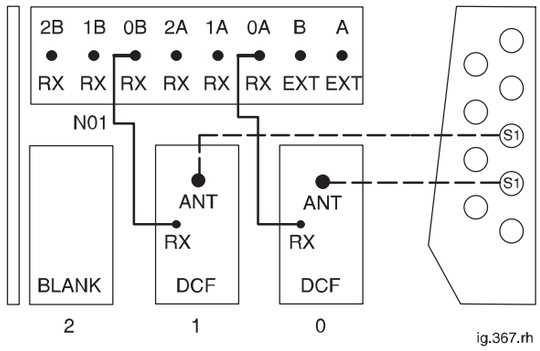

Figure 3-15 Single cabinet omni 3 or 4 with DCF

Unused SMA connectors must be fitted with 50 ohm terminating loads as shown below.

If configured for...	Then 50 ohm load required on unused SMA input to...
omni 3	DCF 1

Configuration for omni 3

Figure 3-16 shows a suggested configuration, using one Horizon*macro* cabinet, for omni 3 with dual stage duplexed combining filter.

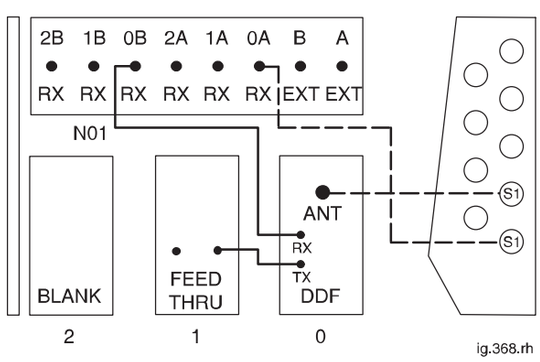

Figure 3-16 Single cabinet omni 3 with DDF

Configuration for omni 4

Figure 3-17 shows a suggested configuration, using a single Horizon*macro* cabinet, for omni 4 with dual stage duplexed combining filter and hybrid combining unit.

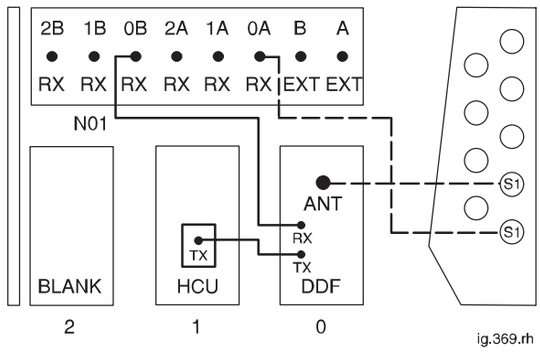

Figure 3-17 Single cabinet omni 4 with DDF and HCU

Configuration for omni 5 or 6

Figure 3-18 shows a suggested configuration, using one Horizon*macro* cabinet, for omni 5 or 6 with dual stage duplexed combining filter and air combining.

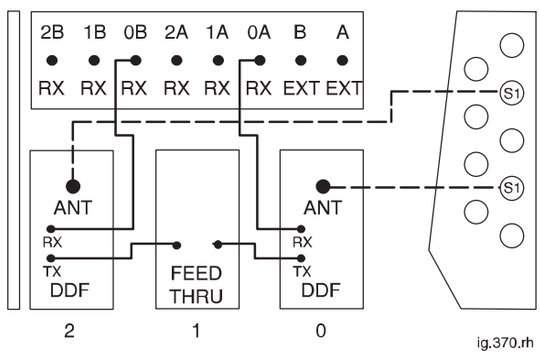

Figure 3-18 Single cabinet omni 5 or 6 with DDF and air combining

Unused SMA connectors must be fitted with 50 ohm terminating loads as shown below.

If configured for...	Then 50 ohm load required on unused SMA input to...
omni 5	DDF 2
omni 3 (depopulated omni 6)	all Tx modules from radio slots 1, 3, and 5

Configuration for sector 1/1 or 2/2

Figure 3-19 shows a suggested configuration, using a single Horizon*macro* cabinet, for sector 1/1 or 2/2 with duplexed combining bandpass filter.

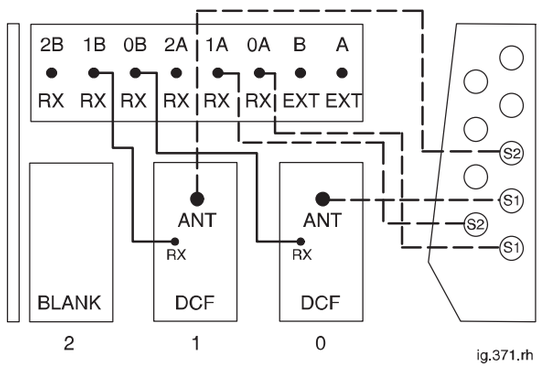

Figure 3-19 Single cabinet sector 1/1 or 2/2 with DCF

Unused SMA connectors must be fitted with 50 ohm terminating loads as shown below.

If configured for...	Then 50 ohm load required on unused SMA input to...
sector 1/1	DCF 0 and DCF 2

Configuration for sector 1/1

Figure 3-20 shows a suggested configuration, using one Horizon*macro* cabinet, for sector 1/1 with twin duplexed filter.

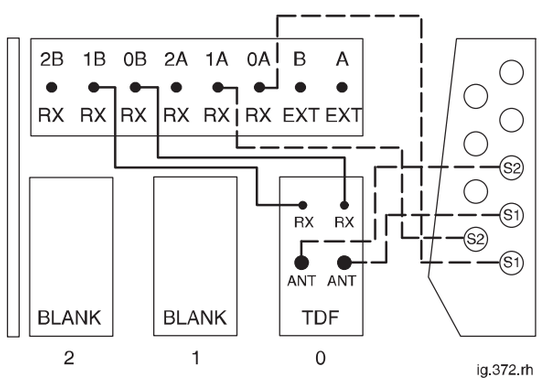

Figure 3-20 Single cabinet sector 1/1 with TDF

Configuration for single cabinet sector 3/3

Figure 3-21 shows a suggested configuration, using one Horizon*macro* cabinet, for sector 3/3 with dual stage duplexed combining filter.

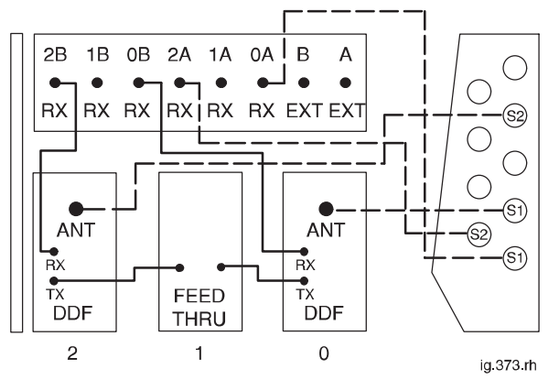

Figure 3-21 Single cabinet sector 3/3 with DDF

Configuration for 2 cabinet sector 3/3

Figure 3-22 shows a suggested configuration, using two Horizon*macro* cabinets, for sector 3/3 with dual stage duplexed combining filter.

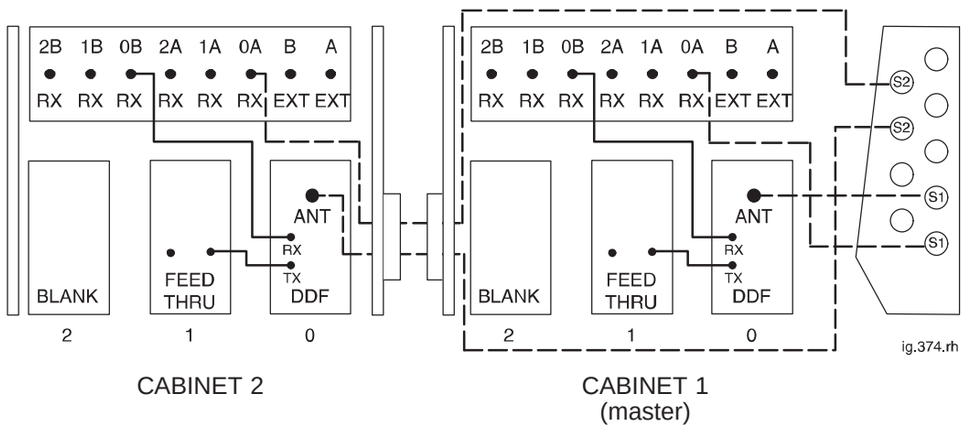

Figure 3-22 Two cabinet sector 3/3 with DDF

Configuration for 2 cabinet sector 4/4

Figure 3-23 shows a suggested configuration, using two Horizon*macro* cabinets, for sector 4/4 with dual stage duplexed combining filter and hybrid combining unit.

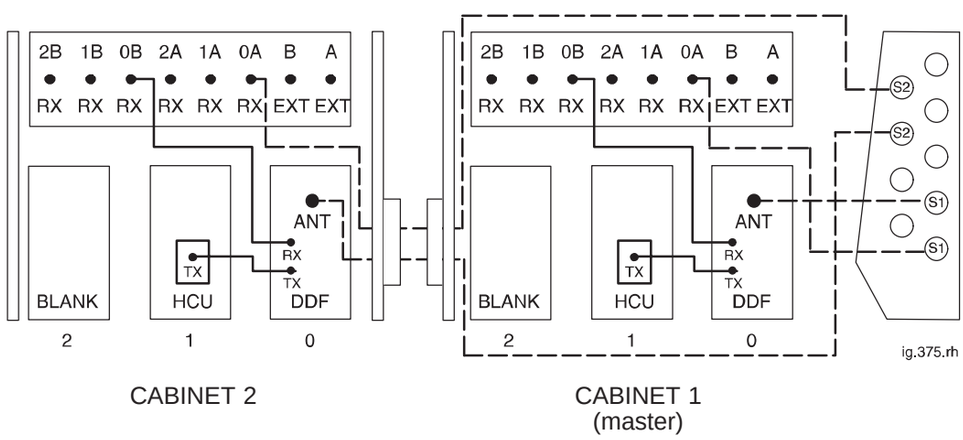

Figure 3-23 Two cabinet sector 4/4 with DDF and HCU

Configuration for 2 cabinet sector 5/5 or 6/6

Figure 3-24 shows a suggested configuration, using two Horizon*macro* cabinets, for sector 5/5 or 6/6 with dual stage duplexed combining filter and air combining.

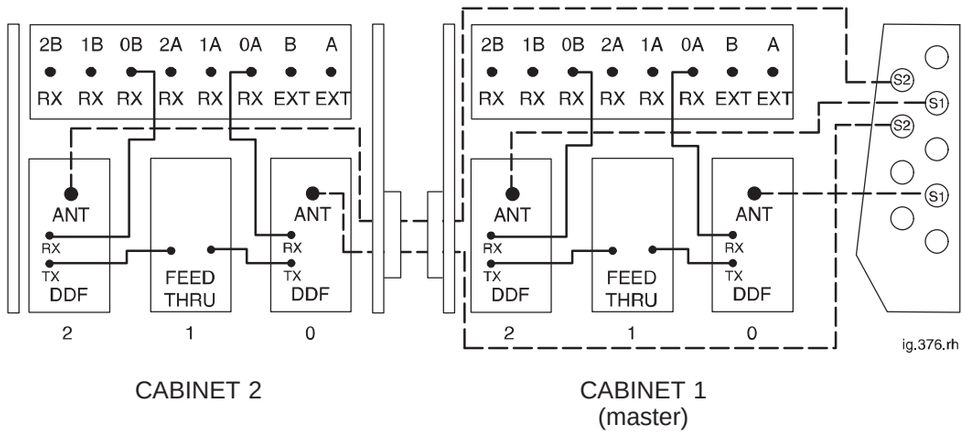

Figure 3-24 Two cabinet sector 5/5 or 6/6 with DDF and air combining

Unused SMA connectors must be fitted with 50 ohm terminating loads as shown below.

If configured for...	Then 50 ohm load required on unused SMA input to...
sector 5/5	both DDF 2 modules

Configuration for single cabinet sector 1/1/1, 1/1/2, 1/2/2 or 2/2/2

Figure 3-25 shows a suggested configuration, using a single Horizon*macro* cabinet, for sector 1/1/1, 1/1/2, 1/2/2 or 2/2/2 with duplexed combining bandpass filter.

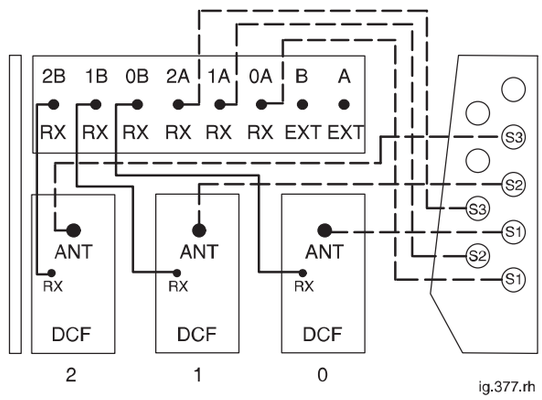

Figure 3-25 Single cabinet sector 1/1/1, 1/1/2, 1/2/2 or 2/2/2 with DCF

Unused SMA connectors must be fitted with 50 ohm terminating loads as shown below.

If configured for...	Then 50 ohm load required on unused SMA input to...
Sector 1/1/1	DCF 0, 1 and 2
Sector 1/1/2	DCF 1 and 2
Sector 1/2/2	DCF 2

Configuration for 2 cabinet sector 2/2/2

Figure 3-26 shows a suggested configuration, using two Horizon*macro* cabinets, for sector 2/2/2 with duplexed combining bandpass filter.

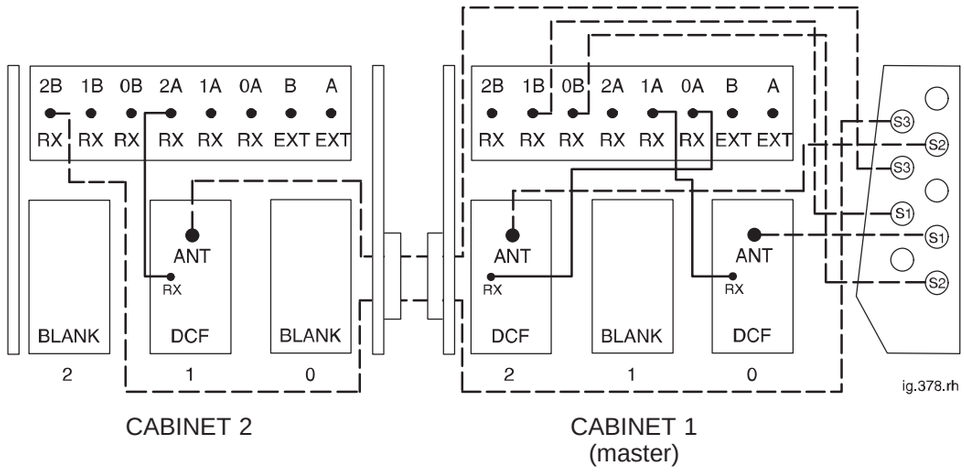

Figure 3-26 Two cabinet sector 2/2/2 with DCF

Configuration for 2 cabinet sector 3/3/3 or 4/4/4

Figure 3-27 shows a suggested configuration, using two Horizon*macro* cabinets, for sector 3/3/3 or sector 4/4/4 with duplexed combining bandpass filter and air combining.

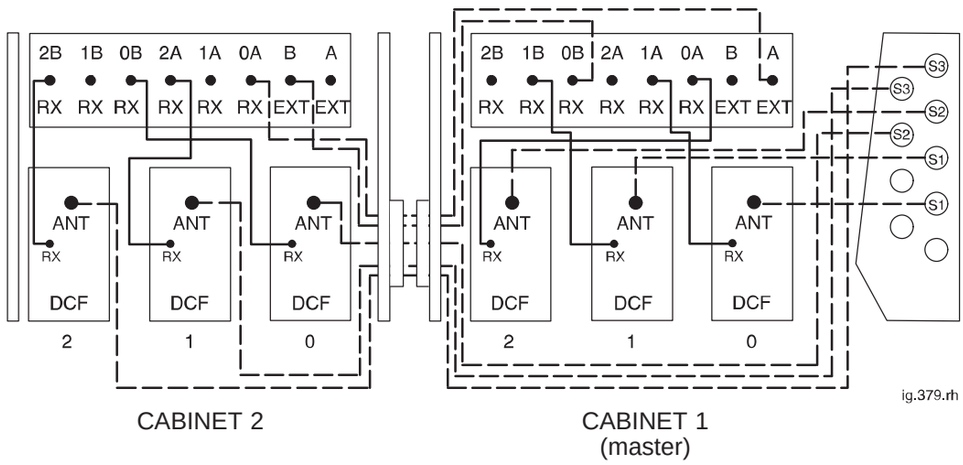

Figure 3-27 Two cabinet sector 3/3/3 or sector 4/4/4 with DCF and air combining

Unused SMA connectors must be fitted with 50 ohm terminating loads as shown below.

If configured for...	Then 50 ohm load required on unused SMA input to...
sector 3/3/3	cabinet 1, DCF 1 cabinet 2, DCF 0 and DCF 2
2/2/2 (depopulated 4/4/4)	all Tx modules from radio slots 1, 3, and 5

Configuration for 3 cabinet sector 3/3/3

Figure 3-28 shows a suggested configuration, using three Horizon*macro* cabinets, for sector 3/3/3 with dual stage duplexed combining filter.

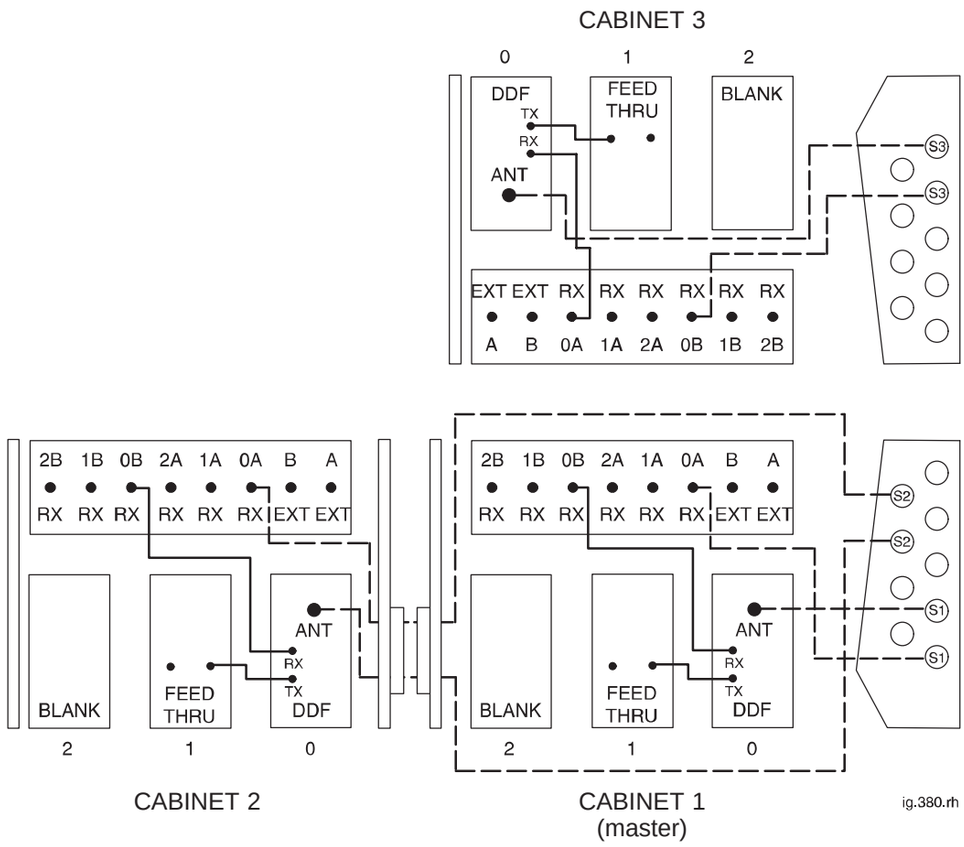

Figure 3-28 Three cabinet sector 3/3/3 with DDF

Configuration for 2 cabinet sector 4/4/4

Figure 3-29 shows a suggested configuration, using two Horizon*macro* cabinets, for sector 4/4/4 with dual stage duplexed combining filter and hybrid combining unit.

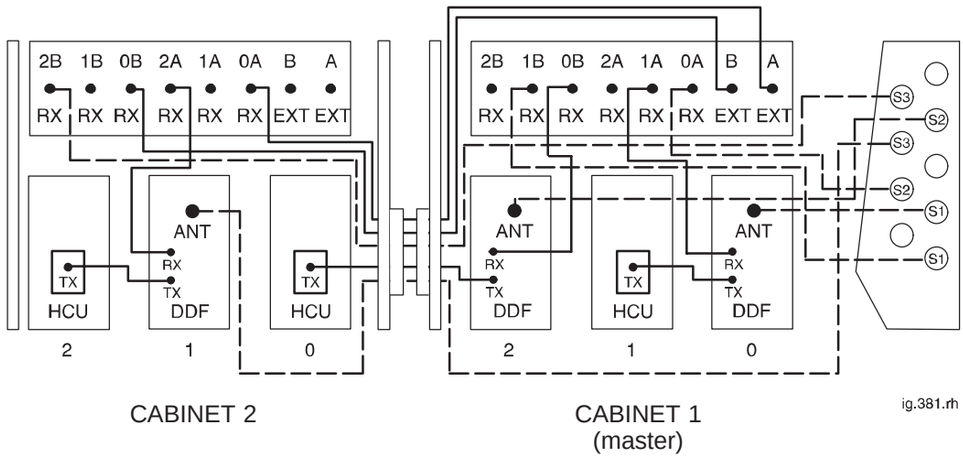

Figure 3-29 Two cabinet sector 4/4/4 with DDF and HCU

Configuration for 3 cabinet sector 4/4/4

Figure 3-30 shows a suggested configuration, using three Horizon*macro* cabinets, for sector 4/4/4 with dual stage duplexed combining filter and hybrid combining unit.

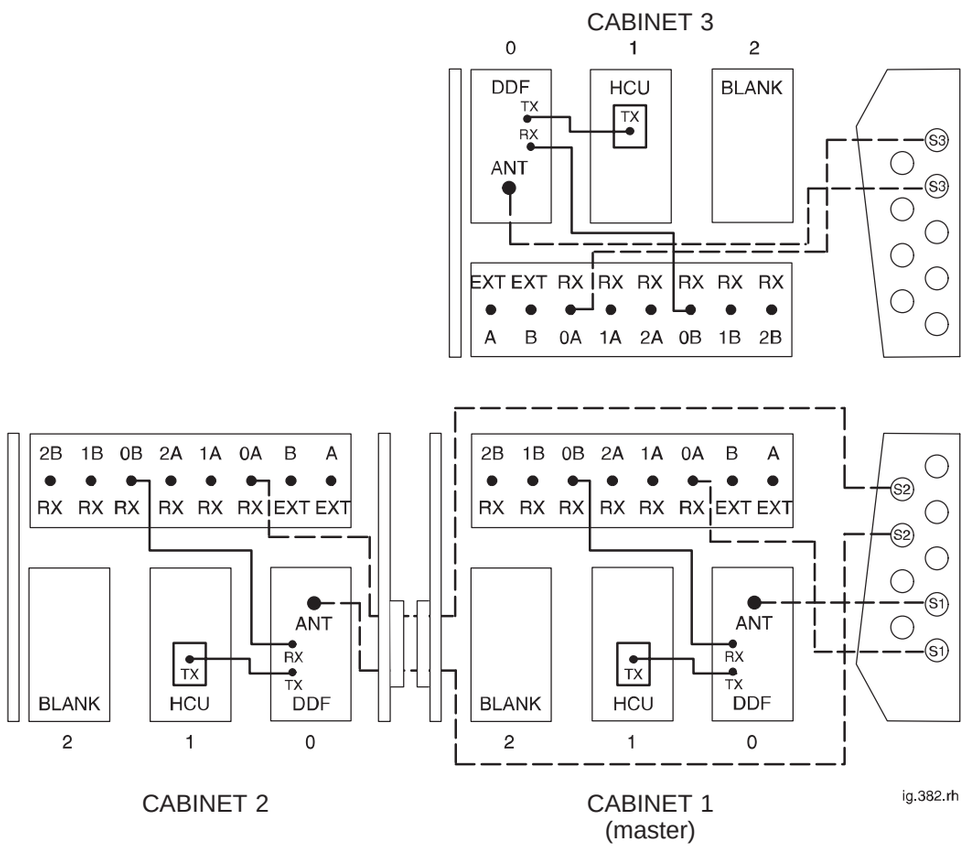

Figure 3-30 Three cabinet sector 4/4/4 with DDF and HCU

Configuration for sector 5/5/5 or 6/6/6

Figure 3-31 shows a suggested configuration, using three Horizon*macro* cabinets, for sector 5/5/5 or sector 6/6/6 with dual stage duplexed combining filter and air combining.

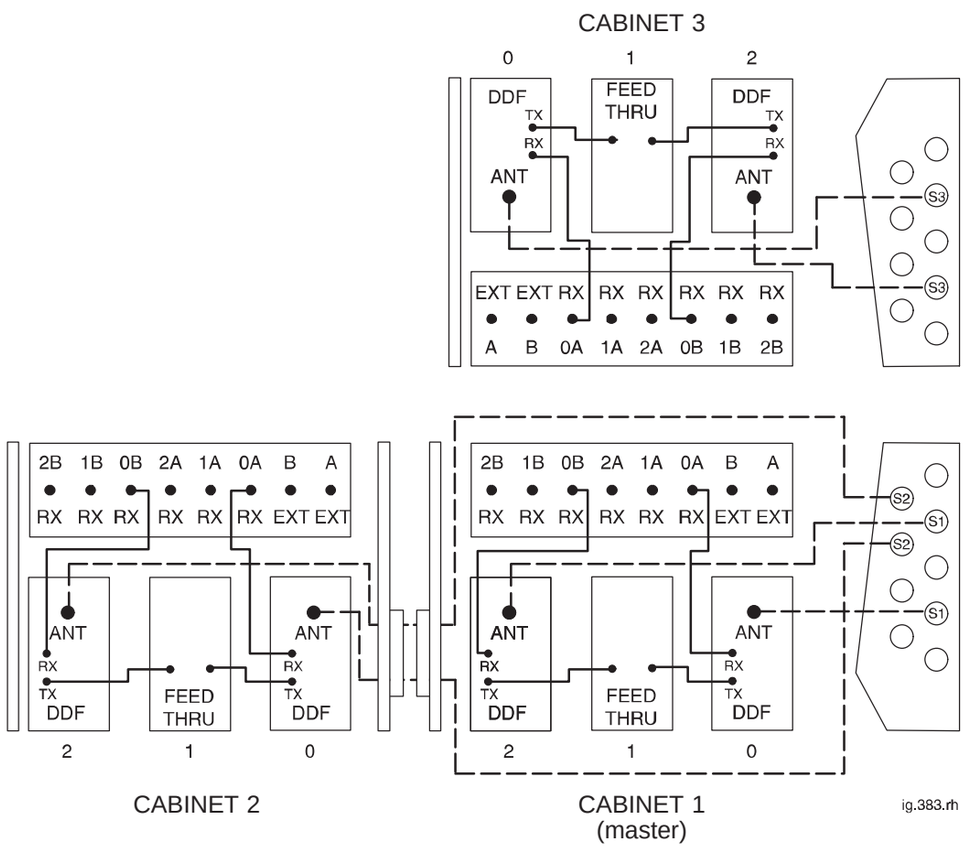

Figure 3-31 Sector 5/5/5 or sector 6/6/6 with DDF and air combining

Unused SMA connectors must be fitted with 50 ohm terminating loads as shown below.

If configured for...	Then 50 ohm load required on unused SMA input to...
sector 5/5/5	all DDF 2 modules
3/3/3 (depopulated 6/6/6)	all Tx modules from radio slots 1, 3, and 5

Configuration for sector 8/8/8

Figure 3-32 shows a suggested configuration, using four Horizon*macro* cabinets, for sector 8/8/8 with dual stage duplexed combining filter, hybrid combining unit and air combining.

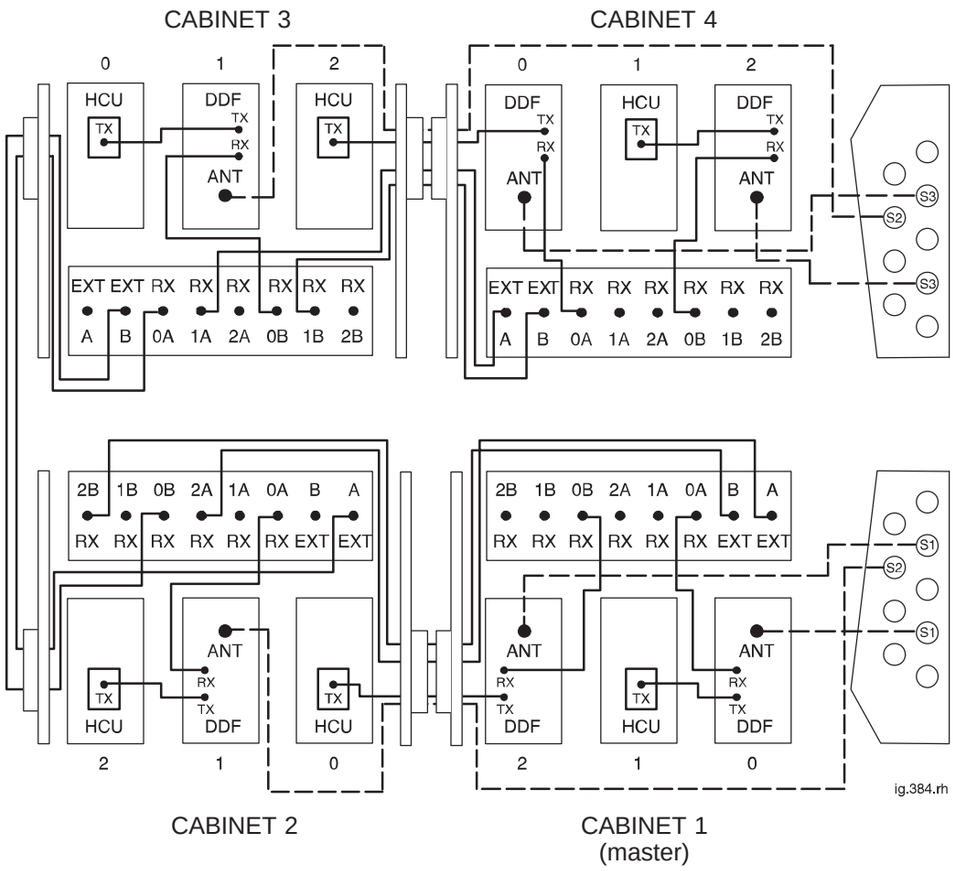

Figure 3-32 Sector 8/8/8 with DDF, HCU and air combining

Unused SMA connectors must be fitted with 50 ohm terminating loads as shown below.

If configured for...	Then 50 ohm load required on unused SMA input to...
4/4/4 (depopulated 8/8/8)	all Tx modules from radio slots 1, 3, and 5

Configuration for dual band 1/1/1-3/3/3

Figure 3-33 shows a suggested configuration, using two Horizon*macro* cabinets, for dual band sector 1/1/1–3/3/3 operation, where sector 1/1/1 is EGSM900 and sector 3/3/3 is DCS1800. This dual band configuration requires one single band 1800 SURF and one dual band 900 SURF.

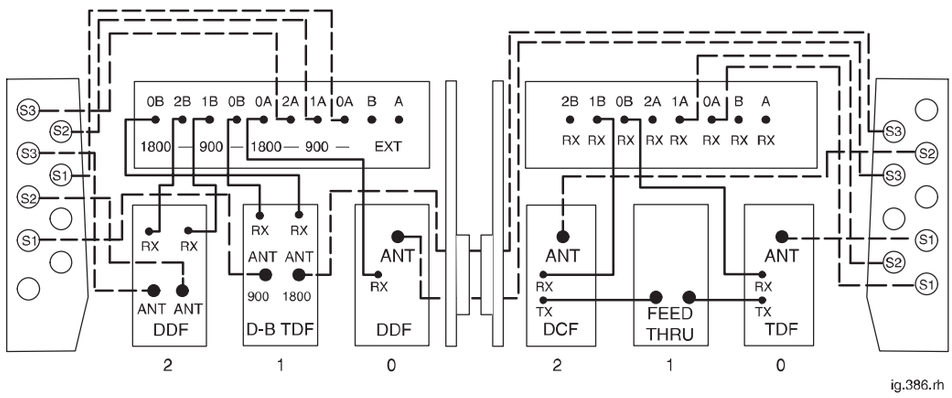

Figure 3-33 Two cabinet dual band sector 1/1/1-3/3/3

Unused SMA connectors must be fitted with 50 ohm terminating loads.

Configuration for dual band 3/3/3-1/1/1

Figure 3-34 shows a suggested configuration, using two Horizon*macro* cabinets, for dual band sector 3/3/3–1/1/1 operation, where sector 3/3/3 is EGSM900 and sector 1/1/1 is DCS1800. This dual band configuration requires one dual band 1800 SURF and one dual band 900 SURF.

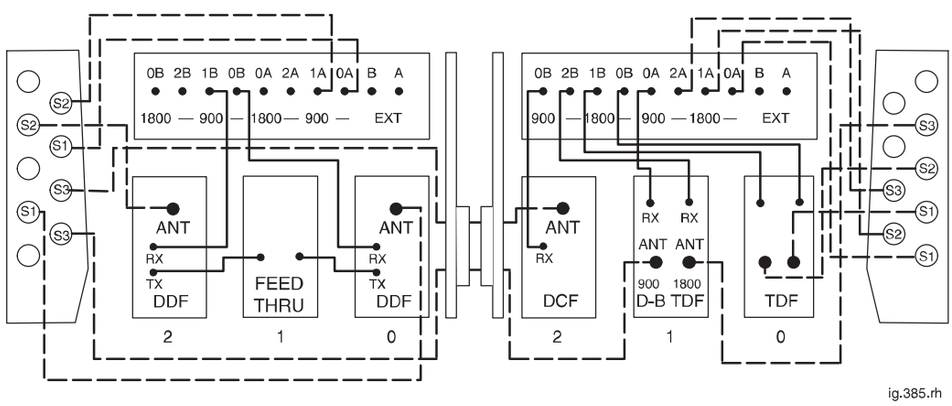

Figure 3-34 Two cabinet dual band sector 3/3/3-1/1/1

Unused SMA connectors must be fitted with 50 ohm terminating loads.

Connecting fibre optic cables

Location of fibre optic connections

In an installation configuration with more than one Horizon*macro* outdoor cabinet, fibre optic connections are used to link the MCUF in the master cabinet to the extension cabinets. A maximum of three extension cabinets can be added to the master cabinet.

Connections from the master cabinet are provided by three fibre optic multiplexers (FMUXs). Two are located integral to the MCUF, and the third is a separate module located in the slot next to the master MCUF. Additional redundant modules may be installed for both MCUF and FMUX modules.

Extension cabinets have only a single FMUX, with optional redundancy, for fibre optic connectivity to the master cabinet.

Tx and Rx data connections to the MCUF and FMUXs are located on the front panel of each module.

Three different types of fibre optic cable, coloured orange and terminated with ST fibre connectors, are available for use. These are described in Table 3-5.

Table 3-5 Extension cabinet fibre optic cables

Order number	Length	Description
SVKN1244	5.6 m long	connects master cabinet to first extension
SVKN1245	7.6 m long	connects master cabinet to second extension
SVKN1246	7.6 m long	connects master cabinet to third extension

WARNING Do not look directly into a fibre optic cable or the data in/out connectors of the FMUX or MCUF, with or without the use of optical aids. Laser radiation can come from either the data in/out connectors or unterminated fibre optic cables connected to data in/out connectors.

Care of fibres

Optical fibre cables contain an inner core, which is a strand of glass coated by a cladding (sometimes in two layers), and an outer protective sheath which provides mechanical protection.

The fibre acts as a light waveguide. In order for the link to work correctly light must be propagated with minimal losses from end-to-end of the fibre. A number of problems can prevent this from happening, resulting in a potentially faulty link. Care must be taken to ensure that the conditions that follow are met.

Minimum bend radius

All optical fibres have a minimum bend radius. This represents the smallest circle that is allowed to be formed from a loop of fibre, that is how tight it can be coiled, looped or bent.

CAUTION	Under no circumstances should fibres be bent tighter than the minimum bend radius.

If fibres are bent tighter than the minimum bend radius then two possible effects can happen:

- Excessive light loss can occur from the outside of the bend, resulting in a loss of performance.
- The fibre can fracture due to microscopic imperfections in the surface. This type of break is invisible externally. If such a break occurs, excessive light loss would be permanent and light would be scattered and reflected from the break in the fibre. Returning the fibre to straight will not help and the whole assembly will require replacement.

For glass fibres (orange or green outer sheath) the long term minimum bend radius is approximately 30 mm.

Figure 3-35 illustrates the minimum bend radius for fibre optic cables.

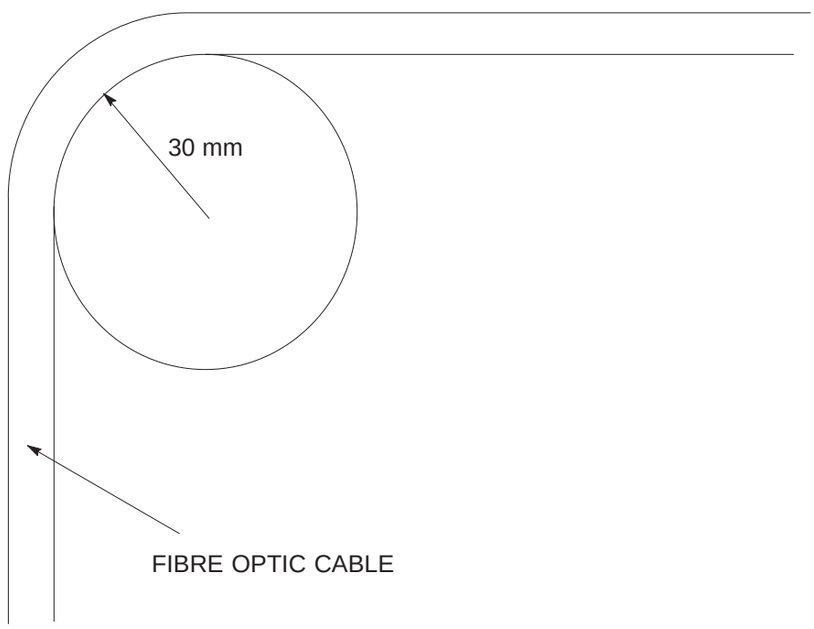

Figure 3-35 Minimum bend radius of 30 mm

If the fibre is under tension (being stretched), the bend radius should be much larger, at least doubled. This is because the tension in the fibre can increase the possibilities of damage.

If in doubt about the radius, the fibre should be allowed to form its natural bend radius by allowing it to bend under gravity only. This natural bend radius is normally greater than 30 mm.

Protecting fibres and connectors

To maintain good light transmission through the fibre optic link it is essential to maintain cleanliness of the connector end surfaces and/or bare fibre ends.

At all times when fibres are not connected into the system, the connector protective caps (normally red) should be fitted and kept in place. This is especially important when routeing fibres during installation.

Cleaning fibres and connectors

Cleanliness of fibre terminations and connectors is essential. If cleaning of contaminated optical components is required, then all areas should be wiped gently with a lint free cloth soaked in a suitable cleaning solution. Care should be taken to ensure the ends of the fibres are not scratched in any way.

Connecting glass fibre cables

Fibre-ST connectors are used to terminate the fibre optic cables. These are push fit and should not be tightened when connecting. Table 3-6 shows the fibre optic interconnections between master and extension cabinets in multiple cabinet sites.

Table 3-6 Fibre optic interconnections

Master cabinet connection	Extension cabinet	FMUX connection
MCUF TCU0 FMUX0 IN	2nd cabinet	DATA OUT
MCUF TCU0 FMUX0 OUT	2nd cabinet	DATA IN
MCUF TCU1 FMUX1 IN	3rd cabinet	DATA OUT
MCUF TCU1 FMUX1 OUT	3rd cabinet	DATA IN
FMUX module DATA IN	4th cabinet	DATA OUT
FMUX module DATA OUT	4th cabinet	DATA IN

Connecting fibre optic cables between cabinets

WARNING	Do not look directly into a fibre optic cable or the data in/out connectors of the FMUX or MCUF, with or without the use of optical aids. Laser radiation can come from either the data in/out connectors or unterminated fibre optic cables connected to data in/out connectors.

To connect fibre optic cables between master and extension cabinets in multiple cabinet sites.

1. Open master and extension cabinet doors and lids.

CAUTION	Under no circumstances should fibres be bent tighter than the minimum bend radius.

2. Route the appropriate length extension cabinet fibre optic cable from the digital module compartment of the master cabinet, through the aperture in the right side of the main cage, to the top section of the cabinet.

CAUTION	Under no circumstances should any tools, such as pliers, be used to connect ST fibre connectors.

3. Connect the push fit ST connector of the fibre optic cables to the appropriate ports on the master MCUF, or master FMUX module, front panel (see Table 3-6).
4. Lay the fibre optic cable into the cable guides and route through the expansion panels to the extension cabinet.
5. Route the fibre optic cable, following existing cable layout as far as possible, through the fibre optic cable hole in the cabinet top section to the extension cabinet FMUX.
6. Connect the push fit ST connector of the fibre optic cables to the data ports on the extension cabinet master FMUX front panel.
7. Repeat steps 2 to 6 for digital redundancy MCUF and FMUX, if fitted.
8. Repeat steps 2 to 7 for additional extension cabinets.

Interface panel cabling

Interface panel diagram and pinout overview

All maincage connectors are located on the interface panel. Each connector is marked with the appropriate label. Power connectors are also located on the interface panel.

An extension cabinet fibre optic cable is not connected to the interface panel, but directly connected to the FMUX digital module in the main cage. The fibre optic cable enters the cabinet through a hole on the top panel in front of the interface panel.

Figure 3-36 shows the locations of all the interface panel connectors.

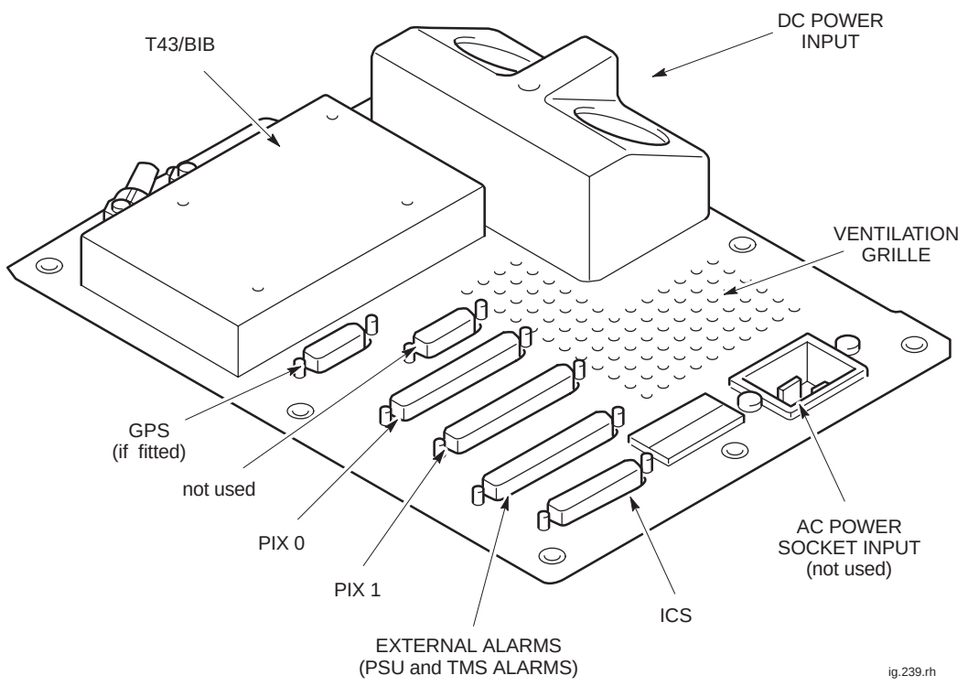

Figure 3-36 Interface panel connector locations

Interface panel connector pinout tables

CAUTION	Keep the plastic connector covers (supplied by Motorola) on unused connectors to protect from damage by static or foreign matter.

The following tables list the connector pinouts:

- GPS, see Table 3-7.
- RTC, see Table 3-8.
- BIB, see Table 3-9.
- T43, see Table 3-10.
- PIX0, see Table 3-11.
- PIX1, see Table 3-12.
- ICS, see Table 3-13.
- External alarms, see Table 3-14.

NOTE	Some pin connections only refer to indoor or outdoor cabinets.

GPS connector

Table 3-7 lists the GPS pin out connections.

NOTE	The GPS connector is optional on later BTS cabinets.

Table 3-7 GPS pin connections (15-way D-type)

Pin no.	Signal/Description	Pin no.	Signal/Description
1	GPS power 1	9	GPS return 1
2	Rx negative	10	GPS power 2
3	Rx positive	11	PPS positive
4	Tx negative	12	PPS negative
5	Tx positive	13	Not connected
6	Spare (not connected)	14	Not connected
7	VPP (not connected)	15	Not connected
8	GPS return 2		

RTC connector (not used)

Table 3-8 lists the RTC connector pinouts:

Table 3-8 RTC pin connections (15-way D-type)

Pin no.	Signal/Description	Pin no.	Signal/Description
1	Not connected	9	Not connected
2	Not connected	10	Not connected
3	RTC0 27 V	11	Earth
4	RTC0 27 V	12	Earth
5	Not connected	13	Not connected
6	RTC1 27 V	14	Earth
7	RTC1 27 V	15	Earth
8	Not connected		

BIB (BIM) interconnection

The Balanced-line Interconnect Board (BIB), also known as BIM, provides the line isolation between the E1/T1 circuit lines and the the CBIA backplane. The board provides an interface for up to six input and six output balanced 120 ohm lines. 12 transformers are used to provide line isolation while maintaining impedance matching between the E1/T1 circuit lines and the NIU module. Each transformer has a 1:1 turns ratio to match the external and backplane 120 ohm connections.

Connection is made using a 37-pin D-type connector to both the BIB and the external PCM twisted pair circuit lines. Figure 3-37 shows a typical BIB and Table 3-9 lists the BIB interconnections.

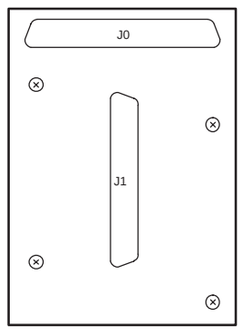

ig.051.rh

Figure 3-37 Balanced-line interconnect board (BIB)

Table 3-9 BIB interconnections

NIU/ port	Pin no.	Equipment/Ext	Pin no.	Pin no.	Equipment/Ext	Pin no.
0/0	J0-1	Tx1+	J1-1	J0-20	Tx1–	J1-20
	J0-2	Rx1+	J1-2	J0-21	Rx1–	J1-21
not used	J0-4	Tx4+	J1-4	J0-23	Tx4–	J1-23
	J0-5	Rx4+	J1-5	J0-24	Rx4–	J1-24
0/1	J0-7	Tx2+	J1-7	J0-26	Tx2–	J1-26
	J0-8	Rx2+	J1-8	J0-27	Rx2–	J1-27
not used	J0-10	Tx5+	J1-10	J0-29	Tx5–	J1-29
	J0-11	Rx5+	J1-11	J0-30	Rx5–	J1-30
1/0	J0-13	Tx3+	J1-13	J0-32	Tx3–	J1-32
	J0-14	Rx3+	J1-14	J0-33	Rx3–	J1-33
not used	J0-16	Tx6+	J1-16	J0-35	Tx6–	J1-35
	J0-17	Rx6+	J1-17	J0-36	Rx6–	J1-36
Connector J0 and J1, pins 3,6,9,12,15,18,19, 22, 25, 28, 31, 34 and 37 are **connected to earth**						

T43 (CIM) interconnection

The Type 43 Interconnect Board (T43), also known as CIM, provides the impedance matching and line isolation between the E1/T1 circuit lines and the CBIA backplane. The board provides an interface for up to six input and six output unbalanced coaxial 75 ohm lines. 12 transformers are used to provide impedance matching and line isolation between the E1/T1 circuit lines and the NIU module. Each transformer has a 1:1.25 turns ratio to match the external 75 ohm and backplane 120 ohm connections.

Connection is made using a 37-pin D-type connector to the interconnect board and twelve type 43 coaxial connectors to the external E1/T1 circuit lines.

Figure 3-38 shows a typical T43, and Table 3-10 lists the T43 interconnections.

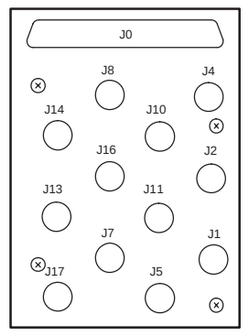

Figure 3-38 Type 43 interconnect board (T43)

Table 3-10 T43 interconnections

NIU/ port	Pin no.	Equipment / Ext	Pin no.	Pin no.	Equipment / Ext	Pin no.
0/0	J0-1	Tx1+	J1 centre	J0-20	Tx1–	J1 shield
	J0-2	Rx1+	J2 centre	J0-21	Rx1–	J2 shield
not used	J0-4	Tx4+	J4 centre	J0-23	Tx4–	J4 shield
	J0-5	Rx4+	J5 centre	J0-24	Rx4–	J5 shield
0/1	J0-7	Tx2+	J7 centre	J0-26	Tx2–	J7 shield
	J0-8	Rx2+	J8 centre	J0-27	Rx2–	J8 shield
not used	J0-10	Tx5+	J10 centre	J0-29	Tx5–	J10 shield
	J0-11	Rx5+	J11 centre	J0-30	Rx5–	J11 shield
1/0	J0-13	Tx3+	J13 centre	J0-32	Tx3–	J13 shield
	J0-14	Rx3+	J14 centre	J0-33	Rx3–	J14 shield
not used	J0-16	Tx6+	J16 centre	J0-35	Tx6–	J16 shield
	J0-17	Rx6+	J17 centre	J0-36	Rx6–	J17 shield
Connector J0, pins 3,6,9,12,15,18,19, 22, 25, 28, 31, 34 and 37 are **not used**						

PIX inputs and outputs

PIX outputs

PIX outputs comprise four relay contacts controlled by the alarm board and MCUF. The relays have multiple contacts, some normally open and some normally closed. The contacts are rated for 1 A at 30 V. The contacts may be used for control of external equipment such as fans or audible alarms.

PIX inputs

PIX inputs comprise 16 connections to external sensors. These inputs report alarms to the BSC, via the alarm board and MCUF, which forwards the alarms to the OMC-R. The end-user supplies the external sensors. Each sensor connects across an opto-coupled pair of PIX inputs (eight per PIX connector).

All sensors **must** be dry-contact type with the following specification:

- 5 kohms or greater across sense inputs for logic 1 (PIX opto-coupler **off**).
- 500 ohms or less across sense inputs for logic 0 (PIX opto-coupler **on**).

Table 3-11 shows PIX0 connections and Table 3-12 shows PIX1 connections.

Table 3-11 PIX0 pin connections (37-way D-type)

Pin no.	Signal/Description	Pin no.	Signal/Description
1	Site input Ext 1–1	19	Not connected
2	Site input Ext 2–1	20	Site input Ext 1–2
3	Site input Ext 3–1	21	Site input Ext 2–2
4	Site input Ext 4–1	22	Site input Ext 3–2
5	Site input Ext 5–1	23	Site input Ext 4–2
6	Site input Ext 6–1	24	Site input Ext 5–2
7	Site input Ext 7–1	25	Site input Ext 6–2
8	Site input Ext 8–1	26	Site input Ext 7–2
9	Not connected	27	Site input Ext 8–2
10	Not connected	28	spare
11	Site output relay 1 – NO	29	Site output relay 1 – NC
12	Site output relay 2 – NO	30	Site output relay 1 – COM
13	Site output relay 2 – NC	31	Site output relay 2 – COM
14	Site output relay 3 – NO	32	Site output relay 3 – NC
15	Site output relay 4 – NO	33	Site output relay 3 – COM
16	Site output relay 4 – NC	34	Site output relay 4 – COM
17	Not connected	35	Not connected
18	Not connected	36	Not connected

Table 3-12 PIX1 pin connections (37-way D-type)			
Pin no.	**Signal/Description**	**Pin no.**	**Signal/Description**
1	Site input Ext 9–1	19	Not connected
2	Site input Ext 10–1	20	Site input Ext 9–2
3	Site input Ext 11–1	21	Site input Ext 10–2
4	Site input Ext 12–1	22	Site input Ext 11–2
5	Site input Ext 13–1	23	Site input Ext 12–2
6	Site input Ext 14–1	24	Site input Ext 13–2
7	Site input Ext 15–1	25	Site input Ext 14–2
8	Site input Ext 16–1	26	Site input Ext 15–2
9	Not connected	27	Site input Ext 16–2
Pins 10 to 18 not connected		Pins 28 to 37 not connected	

ICS connector

Table 3-13 lists the Integrated Cell Site (ICS) connector pinouts. This is a future feature.

Table 3-13 ICS pin connections (25-way D-type)			
Pin no.	**Signal/Description**	**Pin no.**	**Signal/Description**
1	ICS0 TTY earth	10	ICS3 TTY earth
2	ICS0 TTY Rx	11	ICS3 TTY Rx
3	ICS0 TTY Tx	12	ICS3 TTY Tx
4	ICS1 TTY earth	13	ICS4 TTY earth
5	ICS1 TTY Rx	14	ICS4 TTY Rx
6	ICS1 TTY Tx	15	ICS4 TTY Tx
7	ICS2 TTY earth	16	ICS5 TTY earth
8	ICS2 TTY Rx	17	ICS5 TTY Rx
9	ICS2 TTY Tx	18	ICS5 TTY Tx
Pins 19 to 25 not connected			

External alarm connector

This connector is connected to the alarms interface board PL3 by the factory. Table 3-14 lists the external alarms connections. Ten alarms are also shown on the alarm board front panel LEDs.

Table 3-14 External alarms pin connections (37-way D-type)

Pin no.	Signal/Description	Pin no.	Signal/Description
1	Mains AC fail	20	Rectifier return
2	Mains AC return	21	Not connected
3	Not connected	22	Not connected
4	Not connected	23	AUX TMS overtemp
5	TMS 1 failure	24	AUX TMS overtemp return
6	TMS 1 return	25	Door 2 open
7	TMS 2 failure	26	Door 2 return
8	TMS 2 return	27	Optional smoke alarm
9	Not connected	28	Optional smoke alarm return
10	Not connected	29	AUX EQUIP overtemp alarm
11	Not connected	30	AUX EQUIP overtemp return
12	Not connected	31	Not connected
13	Overtemp alarm	32	Not connected
14	Overtemp return	33	Not connected
15	Low voltage alarm	34	Not connected
16	Low voltage return	35	Not connected
17	Not connected	36	CAB overtemp
18	Not connected	37	CAB overtemp return
19	Rectifier fail		

Chapter 4

Installing the cable shroud

Chapter 4
Installing the cable shroud i

Introduction to cable shroud installation . . . . . Inst. 4–1
Preparing to install the cable shroud . . . . . Inst. 4–1
Considerations when installing the cable shroud . . . . . Inst. 4–1

Cable shroud installation procedures . . . . . Inst. 4–2
Attaching the cable shroud frame to the BTS cabinet . . . . . Inst. 4–2
Adapting the shroud for cable entry from below ground . . . . . Inst. 4–4
Adapting the shroud for cable entry from ground level . . . . . Inst. 4–5
Adapting the shroud for high level cable entry . . . . . Inst. 4–6
Installation between cabinets (or the AEH) . . . . . Inst. 4–7
Cable routeing for multiple cabinet sites . . . . . Inst. 4–10

Introduction to cable shroud installation

Preparing to install the cable shroud

The cable shroud is installed after the BTS cabinet is in position. If the shroud is to be used for cable concealment between two BTS cabinets or a BTS cabinet and an auxiliary equipment housing, 182 mm space must be allowed between templates, (see **Site requirements and considerations** in Chapter 2 of this category). This will ensure the correct spacing between the cabinets for the shroud. A shroud template is provided, with the shroud, as an aid to determine the space required.

Considerations when installing the cable shroud

The cable shroud is normally installed on the right side of the BTS cabinet. It can be installed on the left side of the cabinet, if the cabinet has been fitted with the earth/connector plate mounted on the left side. The cable shroud can also be installed between adjacent BTS cabinets or between a BTS cabinet and an auxiliary equipment housing (AEH).

Only the procedures for attaching the cable shroud to the right side of the cabinet, and between cabinets, are described in this chapter. The procedures for attaching the cable shroud to the left side of the cabinet are the same, but mirrored. The side panels of the shroud can be attached to either side of the shroud frame to allow this.

Cable shroud installation procedures

Attaching the cable shroud frame to the BTS cabinet

The procedure for attaching the cable shroud frame to the right side of the BTS cabinet is as follows (letters in parentheses refer to Figure 4-2):

1. Remove the side panels from the cable shroud frame.
2. Separate the two flanges from the left side of the shroud top panel (see Figure 4-1) and remove one of them.

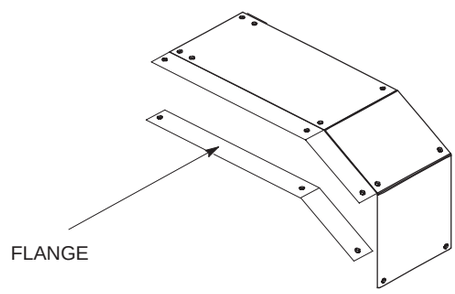

Figure 4-1 Shroud top panel detail showing the left hand flanges

3. Open the lid of the BTS cabinet.
4. Screw three M8 bolts loosely into the holes indicated by the arrows STEP (4) in (A).
5. Slide the rear panel of the shroud onto the rear two bolts and then screw two M8 bolts into the holes indicated by the arrows STEP (5) in (B). Tighten all four bolts.
6. Slide the shroud front panel onto the previously installed bolt and then screw two M8 bolts into the holes indicated by the arrows for STEP (6) in (C). Tighten all four bolts.
7. Mount the shroud top cover (flanges already fitted) in place and secure to the cabinet side by inserting an M8 bolt in the position indicated STEP (7) in (C).
8. Secure the top cover to the shroud rear panel by tightening the two anti-tamper screws indicated by the arrows STEP (8) in (D).
9. Secure the top cover to the shroud front panel by tightening the two anti-tamper screws indicated by the arrows STEP (9) in (D).

The procedure for attaching the cable shroud frame is now complete. The procedures for attaching the shroud side panels are described later in this chapter and vary according to the method of cable entry required.

Figure 4-2 Shows the fitting of a cable shroud frame to a cabinet.

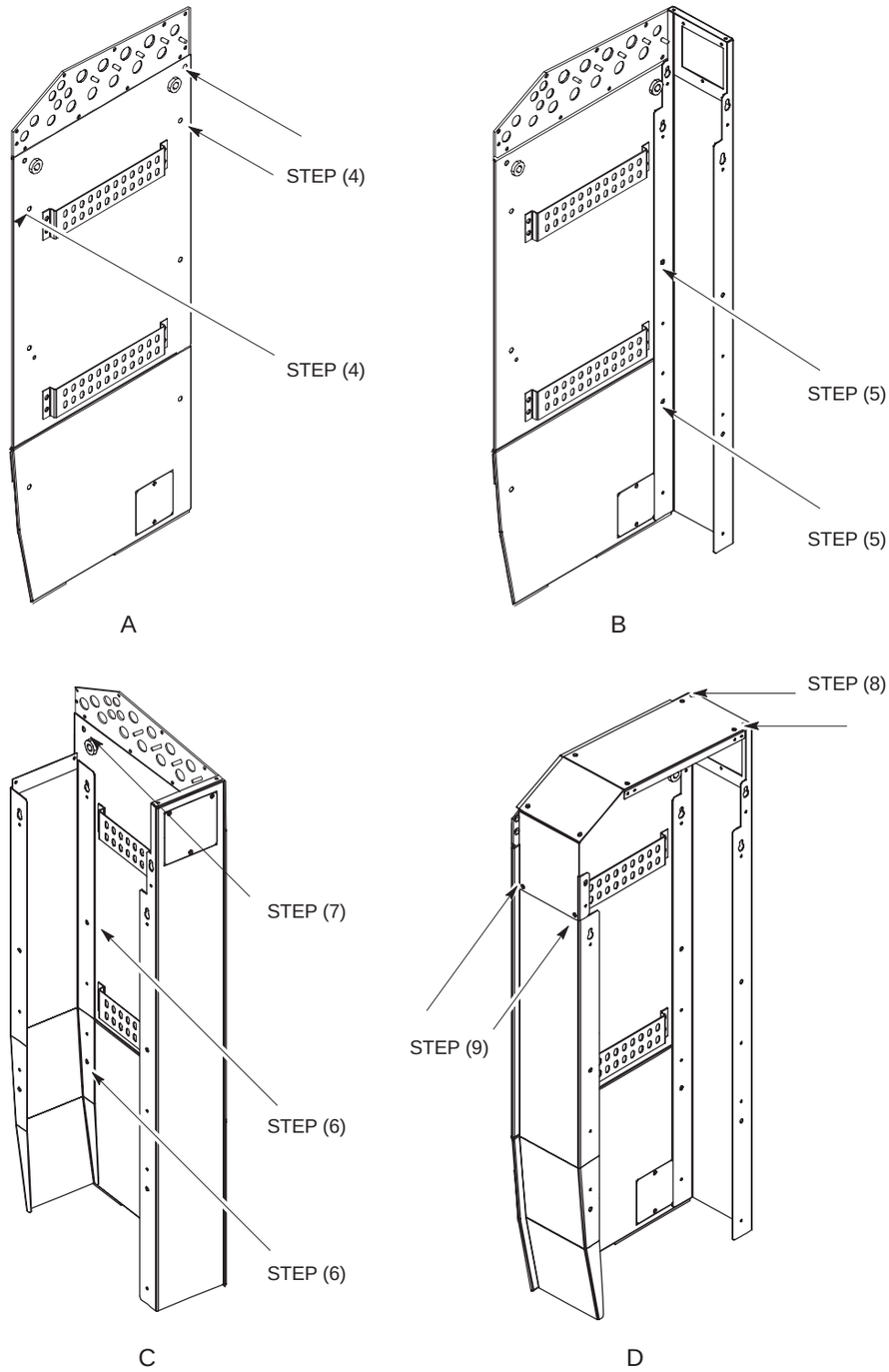

Figure 4-2 Fixing the cable shroud frame to the left side of the cabinet

Adapting the shroud for cable entry from below ground

If cable entry to the cabinet is from below ground, connect the cables to the cabinet earthing plate and fit the three side panels to the shroud frame using anti-tamper screws, as shown in Figure 4-3.

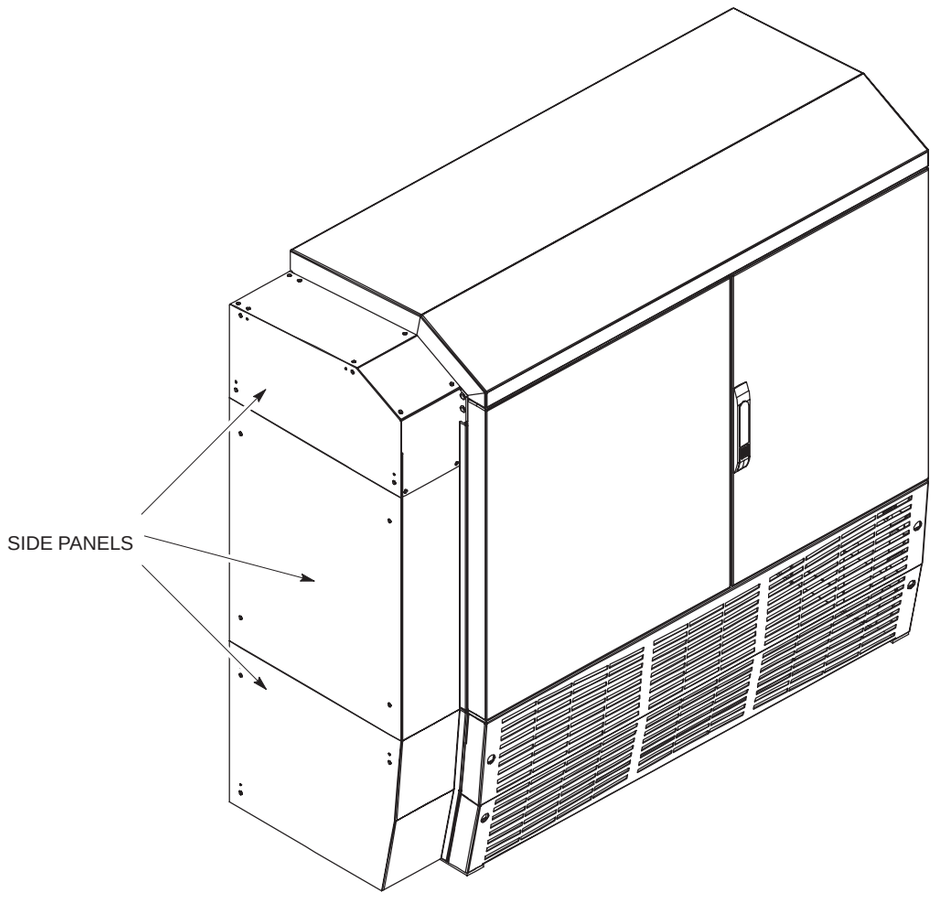

Figure 4-3 Cable shroud adapted for cable entry from below ground

Adapting the shroud for cable entry from ground level

If cable entry to the cabinet is from ground level, connect the cables to the cabinet earthing plate and fit the two side panels to the shroud frame using anti-tamper screws, as shown in Figure 4-4.

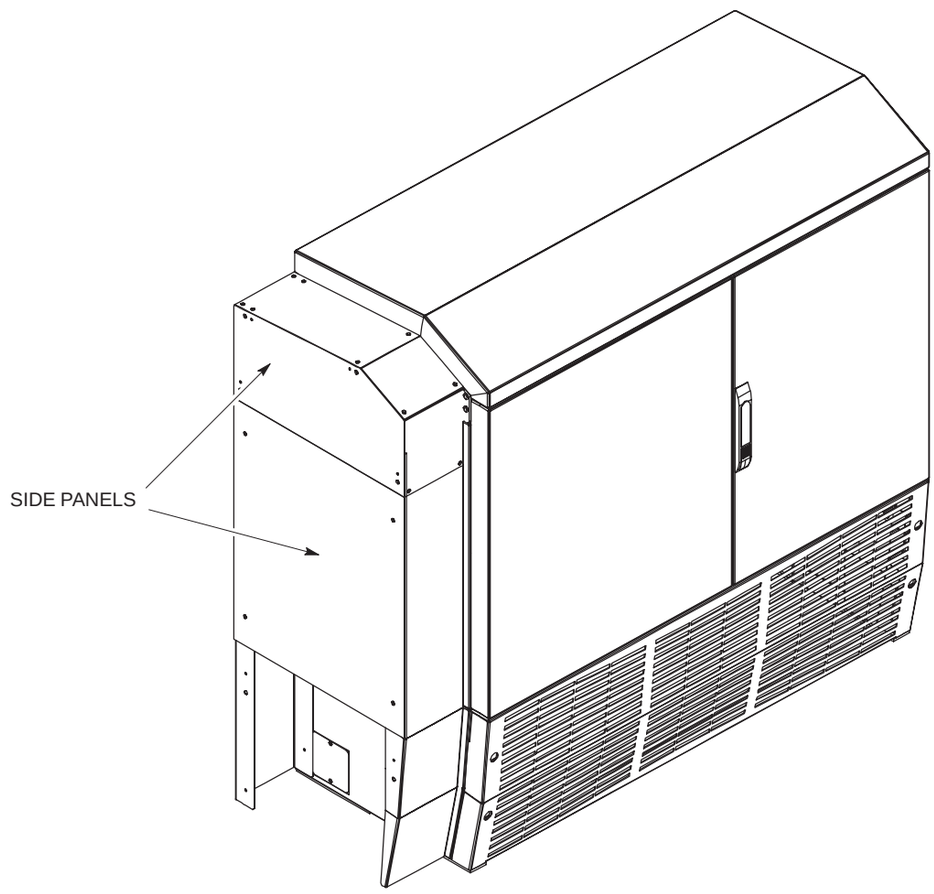

Figure 4-4 Cable shroud adapted for cable entry from ground level

Adapting the shroud for high level cable entry

If high level cable entry to the cabinet is required, connect the cables to the cabinet earthing plate and fit the side panel to the shroud frame using anti-tamper screws, as shown in Figure 4-5.

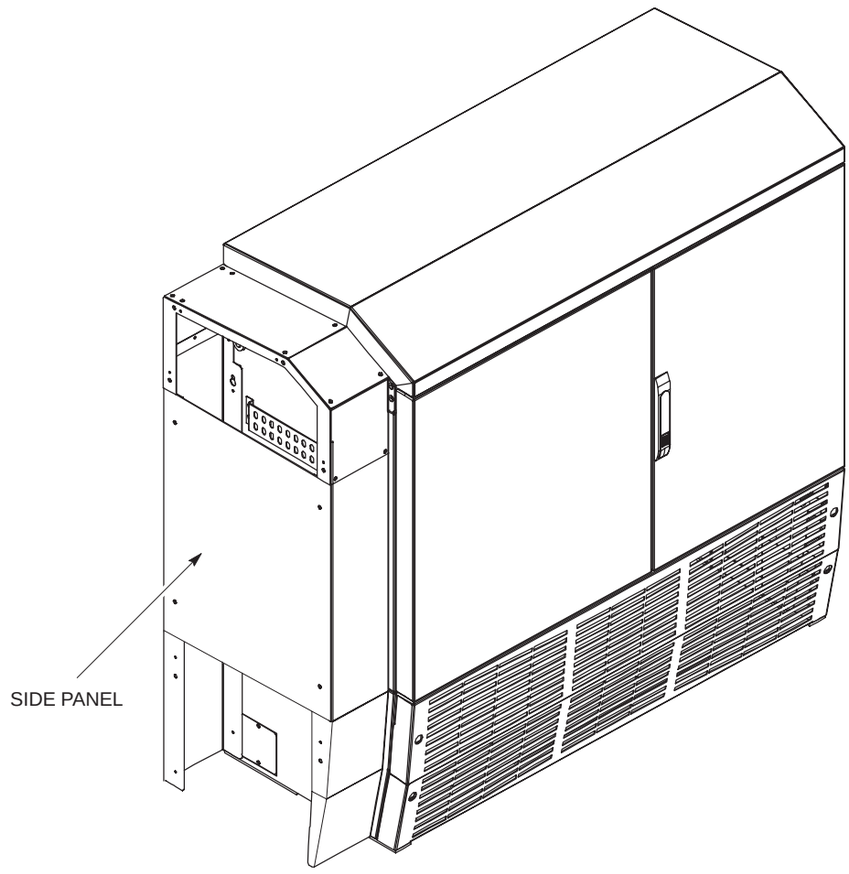

Figure 4-5 Cable shroud adapted for high level cable entry

Installation between cabinets (or the AEH)

This procedure must be carried out after the first cabinet has been bolted in position and before any additional cabinet or auxiliary equipment housing (AEH) is bolted down. Use the shroud template as an aid to determine spacing.

NOTE	The procedure for installing the shroud between two BTS cabinets or two auxiliary equipment housings is basically the same and is described below.

To install the cable shroud between adjacent cabinets or between a cabinet and the auxiliary equipment housing, proceed as follows:

1. Open the lids on both cabinets.
2. Remove the two cabinet end plates from the cabinet sides facing each other and replace with expansion plates, (see **Connecting antennas** in Chapter 3 of this category).
3. Attach the rear panel of the shroud to the first cabinet and then attach the front panel, as described previously in **Procedure for attaching the cable shroud frame to the BTS cabinet**.
4. Prior to manoeuvring a second BTS cabinet or AEH into final position:
   - Remove the expansion plate pass through blanks, as required.
   - Undo the two hose clips securing each RF cable gland housing and remove gland assembly, (if RF connection required).
   - Feed any dc power cables through the expansion plates.
5. Adjust the position of the second cabinet or AEH, if necessary, so that its side is flush against the sides of the shroud and the bolt holes identified in Figure 4-2 and Figure 4-6 are aligned. Bolt the rear and front panels of the shroud to the side of the housing through these holes.
6. Make the dc power, fibre optic and signal connections between the two cabinets, (see Figure 4-8 for routeing), and then bolt the cabinet or AEH to the floor.
7. Make any RF connections, appropriate to the site configuration (see Figure 4-8 for routeing and **Suggested RF configurations**), between the cabinets. Remove the required number of blanking plugs and fit both multi-cable glands over the RF cables.
8. Fit rubber housing around left cable gland and insert into left side expansion plate, as shown in Figure 4-7 secure with two hose clips. Repeat for right side gland.
9. Slide the shroud top cover in place and secure to the rear panel and front panel by tightening the four anti-tamper screws, as described previously in **Procedure for attaching the cable shroud frame to the BTS cabinet**.

The procedure for installing the cable shroud between cabinets and/or the auxiliary equipment housing is now complete.

Shroud attachment points

Figure 4-6 shows the shroud attachment points on the auxiliary equipment housing.

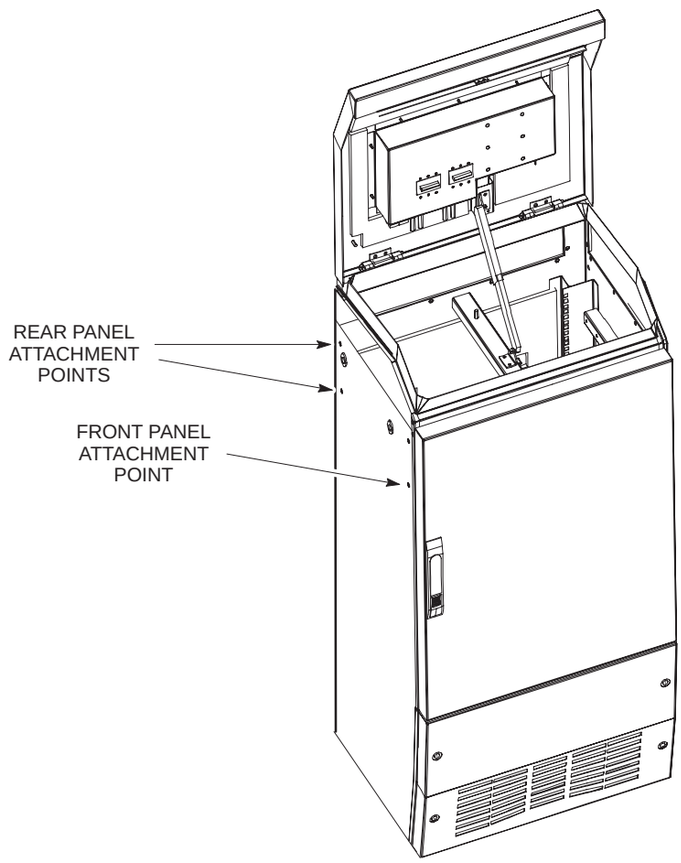

Figure 4-6 Shroud attachment points on the auxiliary equipment housing

Cabinet expansion

Figure 4-7 shows the BTS cabinet expansion plate and two views showing the recommended installation configurations.

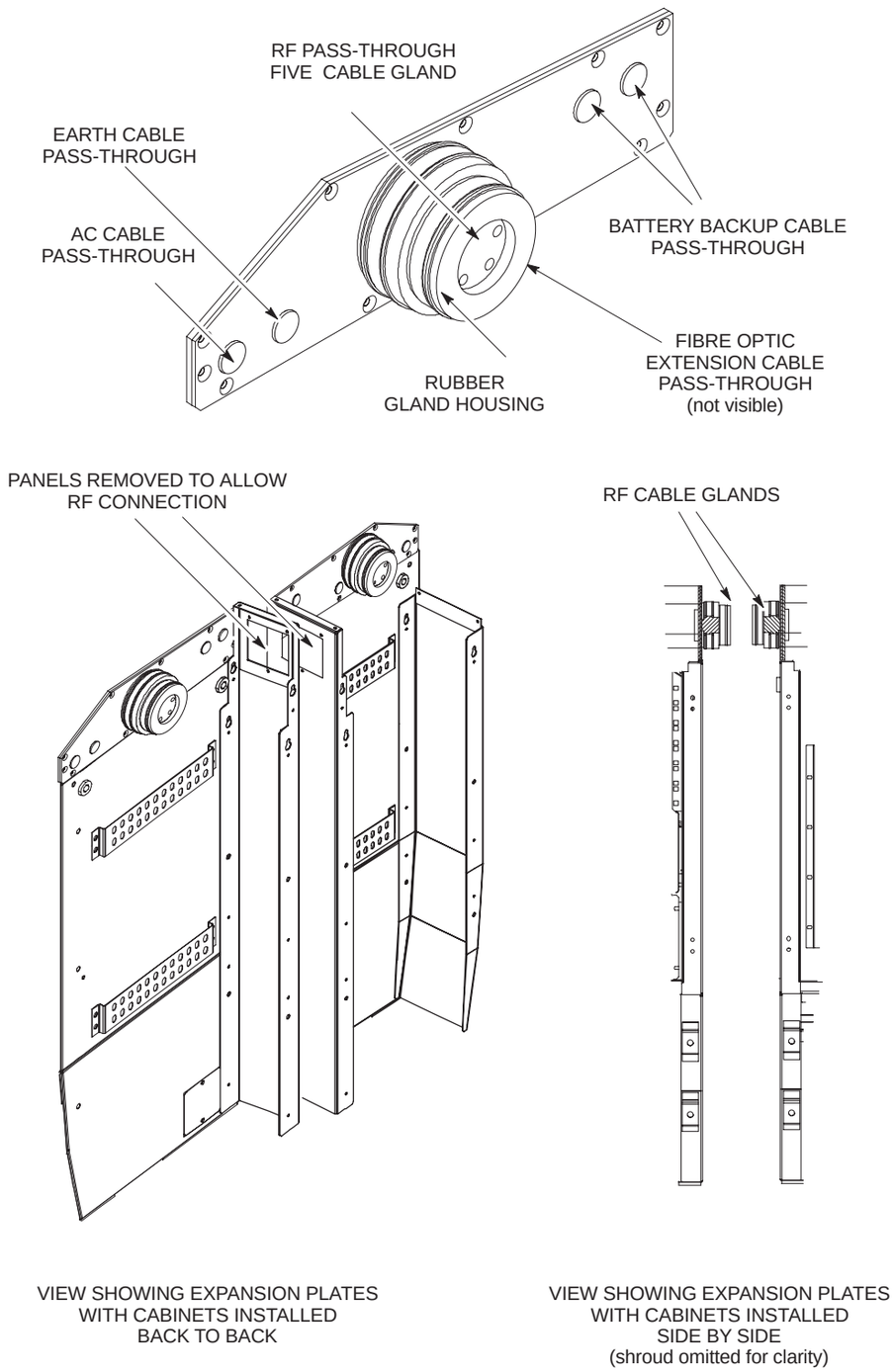

Figure 4-7 BTS cabinet expansion plate

Cable routeing for multiple cabinet sites

Figure 4-8 shows a representation of the RF interconnection cable routeing through the cabinets for multiple cabinet sites. FIbre optic interconnections follow similar routeing. Cable routeing for more complex layouts may be derived from these basic diagrams.

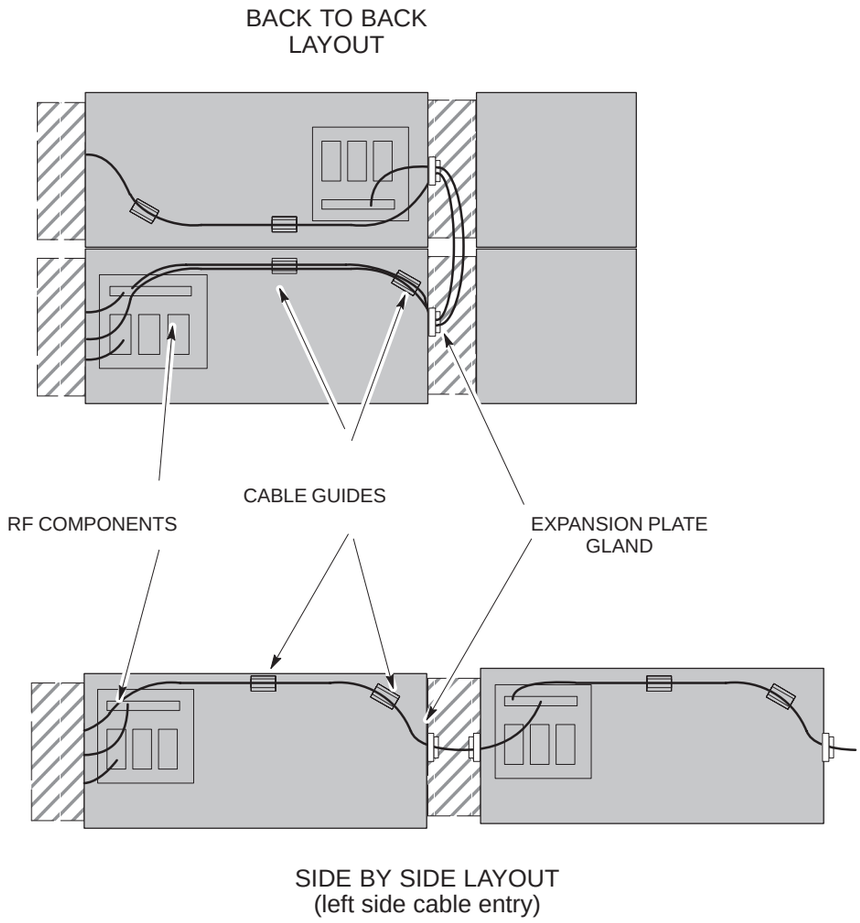

Figure 4-8 Guide to cable routeing through multiple cabinets

MOTOROLA

Chapter 5

Installing the auxiliary equipment housing

Chapter 5
Installing the auxiliary equipment housing i

Procedures for installing the auxiliary equipment housing . . . . . Inst. 5–1
Assumptions regarding site preparation . . . . . Inst. 5–1
Layout of the auxiliary equipment housing . . . . . Inst. 5–1
Auxiliary equipment housing packaging . . . . . Inst. 5–2
Introduction to installing the auxiliary equipment housing . . . . . Inst. 5–2
Installing the auxiliary equipment housing template . . . . . Inst. 5–3
Installing auxiliary equipment housing bolt anchors . . . . . Inst. 5–4
Bolting the auxiliary equipment housing to the floor . . . . . Inst. 5–5

Installing batteries in the auxiliary equipment housing . . . . . Inst. 5–6
Introduction to battery installation . . . . . Inst. 5–6
Installing batteries . . . . . Inst. 5–7

Auxiliary equipment housing (AEH) connections . . . . . Inst. 5–10
Earthing the AEH . . . . . Inst. 5–10
Connecting dc cables to the AEH . . . . . Inst. 5–10
Connecting the alarm signal cables . . . . . Inst. 5–11
Internal connections in the AEH . . . . . Inst. 5–11

Configuring battery backup to supply two BTS cabinets . . . . . Inst. 5–12
Introduction to configuring battery backup . . . . . Inst. 5–12
Removing the power distribution box . . . . . Inst. 5–12
Interior view of power distribution box . . . . . Inst. 5–13
Removing the parallelling links . . . . . Inst. 5–14
Refitting the power distribution box . . . . . Inst. 5–15

Procedures for installing the auxiliary equipment housing

Assumptions regarding site preparation

The information contained in this chapter assumes that the site and the foundation for the auxiliary equipment housing has been prepared in a similar manner to that for the Horizon*macro* outdoor cabinet, as described in Chapter 2 of this category.

Most of the information contained in Chapter 3 regarding equipment delivery, weather conditions affecting unpacking/installation and safety considerations is also applicable to the auxiliary equipment housing.

Layout of the auxiliary equipment housing

Figure 5-1 shows the layout of the auxiliary equipment housing.

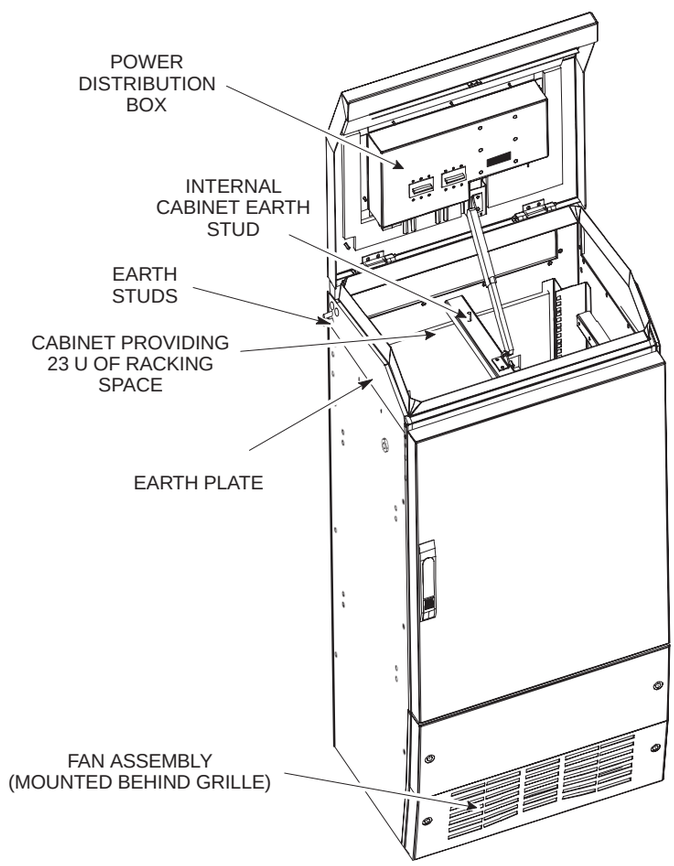

Figure 5-1 The auxiliary equipment housing

Auxiliary equipment housing packaging

The design of the packaging for the auxiliary equipment housing is similar to that used for the BTS cabinet. The main difference is that the box is not wrapped, but is of the “all in one” type and goes over the auxiliary equipment housing.

Introduction to installing the auxiliary equipment housing

The auxiliary equipment housing can be installed on either side of the BTS cabinet, normally on the opposite side to the antenna cable entry.

The auxiliary equipment cabinet is supplied with an alloy template (shown in Figure 5-2), included in the packaging. The template is installed before the cabinet to show the locations of the cabinet mounting bolt anchors. There is no need to remove the template after installation of the expanding bolt anchors.

NOTE	Ensure the template is installed on the correct side of the BTS cabinet. If a cable shroud is to be fitted between the BTS cabinet and the auxiliary equipment housing, its mounting template must be placed on the ground between the BTS cabinet and the auxiliary equipment housing template to ensure that the spacing between the two cabinets is correct. The shroud should be secured to the BTS cabinet before the auxiliary equipment housing is fixed in position.

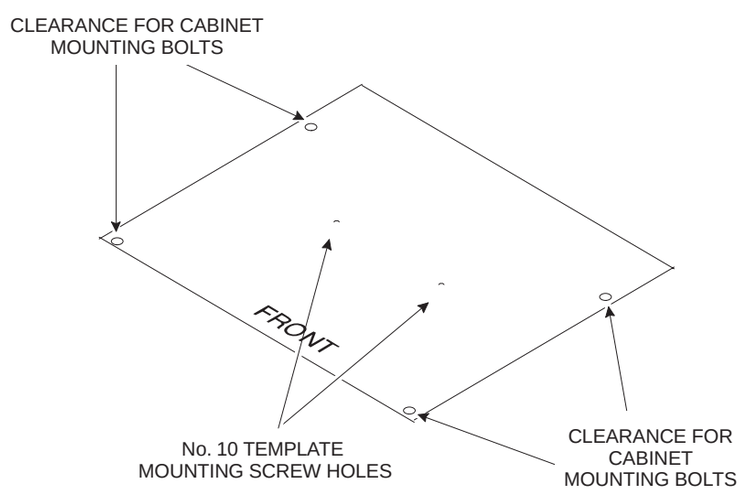

Figure 5-2 Auxiliary equipment housing template

Installing the auxiliary equipment housing template

The template (shown in Figure 5-2) must be secured to the concrete floor before drilling the holes for the M12 anchor bolts.

1. If required, place the cable shroud template on the ground against the appropriate side of the BTS cabinet, so it will act as a spacer between the BTS cabinet and the auxiliary equipment housing.
2. Move the auxiliary equipment cabinet template to the selected mounting position, flush against the cable shroud template.
3. Mark the positions of the two template mounting screw holes in the template.

WARNING	Wear safety glasses and a dust mask when drilling holes.

CAUTION	Drilling concrete flooring produces cement dust, which is harmful to equipment and wiring. Protect the cabinet and any nearby equipment from dust. Use a tarpaulin, cloth, or plastic sheeting to cover exposed equipment. Clean up any accumulated debris from the anchor installation carefully before uncovering the equipment. Use drilling equipment suitable for cutting steel reinforced concrete.

4. Drill out the two holes to a depth and clearance for No. 10 screws.
5. Fit plastic expanding plugs into the mounting holes.
6. Position the template over the mounting holes and secure using No. 10 screws.
7. When satisfied that the template is correctly installed, carry out procedure for installing the cabinet anchor bolts.

Installing auxiliary equipment housing bolt anchors

The concrete floor must be drilled to accept the M12 anchor bolts. Washers, bushes and M12 steel bolts must be supplied by the customer.

The recommended length of the M12 steel anchor bolts is 105 mm minimum.

WARNING	Wear safety glasses and a dust mask when drilling holes.

CAUTION	Drilling concrete flooring produces cement dust, which is harmful to equipment and wiring. Protect the cabinets and any nearby equipment from dust. Use a tarpaulin, cloth, or plastic sheeting to cover exposed equipment. Clean up any accumulated debris from the anchor installation carefully before exposing the equipment. Use drilling equipment suitable for cutting steel reinforced concrete.

1. Using the four holes in the template as a guide, drill the concrete floor to a depth and clearance for the M12 anchor bolts.
2. Fit the M12 mounting anchors to the holes in the floor.
3. Fit the anchor bolts with the supplied bushes and washers, through the template, to each anchor.
4. Tension up the anchor bolts to expand the anchors.
5. Remove and retain the M12 bolts and washers for later use.

Bolting the auxiliary equipment housing to the floor

WARNING	An unequipped auxiliary equipment housing weighs 110 kg. Observe proper lifting precautions and handle the cabinet with extreme caution to avoid tipping. The auxiliary equipment housing must be lifted by fitting eyebolts to the sides of the cabinet. Refer to **Safety considerations** in **Unpacking and preparing the cabinet** for information about eyebolt selection and use.

1. Manoeuvre the empty auxiliary equipment housing onto the template, but do not bolt in position yet.
2. Remove each of the eyebolts from their threaded holes and return the eyebolts to the tool kit for future use.
3. Open the housing lid and install the dc power and alarm signal cables between the BTS cabinet and the auxiliary equipment housing.

NOTE	The auxiliary equipment cabinet can be secured to the cable shroud, if one is used. Refer to Chapter 4 of this category for information regarding the installation of a cable shroud between a BTS cabinet and the auxiliary equipment housing. The cable shroud and dc power cable must be installed before the housing is bolted to the floor.

4. Disconnect the power cable to the fan and remove the front panel containing the fan assembly. Also remove all the battery trays.
5. Line up the fixing holes in the bottom of the housing with the previously installed anchors.
6. Place a flat washer onto each M12 mounting bolt and fit the four mounting bolts loosely. Do not tighten yet.
7. Using a spirit level, verify that the auxiliary equipment housing is level.
8. Tighten up the mounting bolts to the correct torque, (see **Site requirements and considerations** in Chapter 2 of this category).
9. Refit the bottom front panel, previously retained.

Installing batteries in the auxiliary equipment housing

Introduction to battery installation

The auxiliary equipment housing can be fitted with two banks of eight 6 V batteries, mounted on four battery trays. Each bank is wired together in series to provide –48 V dc backup power for the Horizon*macro* outdoor cabinet. The two banks can be wired in parallel, to provide increased backup duration for a single BTS cabinet, or fed separately to two BTS cabinets.

NOTE	Batteries must be fully charged and load tested before installation.

Figure 5-3 shows a typical battery arrangement in the auxiliary equipment housing when a full complement of 16 batteries is installed.

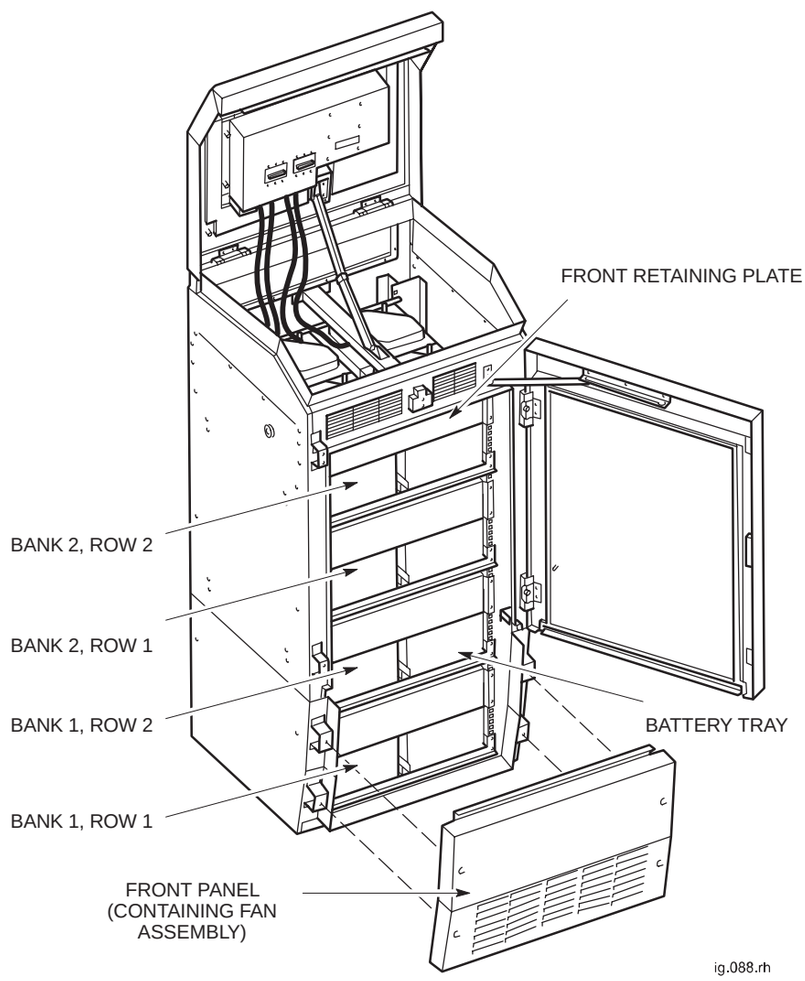

Figure 5-3 Battery arrangement in the auxiliary equipment housing

Installing batteries

NOTE	Battery trays, retaining plates and leads are supplied with the auxiliary equipment housing (AEH). Batteries are not supplied with the AEH. They must be obtained separately by the customer. Motorola recommend the use of Yuasa or Hawker 6 V batteries (kit number SVPN1216 contains eight batteries).

WARNING	The batteries are capable of supplying high short circuit currents and as such provides a high energy hazard.

To install batteries in the auxiliary equipment housing:

1. Ensure that batteries to be installed are fully charged and load tested in accordance with battery manufacturers handbook.
2. Remove the front panel from the housing by undoing the six retaining screws and disconnecting the cable to the fan assembly (contained within the front panel).
3. Disconnect the heater mat power connectors at each tray and remove the upper three battery trays in the auxiliary equipment housing (if not already removed).
4. Install the four batteries onto the bottom tray in the cabinet so that the positive and negative terminals match the arrangement shown in Figure 5-4.
5. Connect the leads to the terminals as shown in Figure 5-5 and then fit the front retaining plate.
6. Install the battery tray for row 2 in the auxiliary equipment housing, reconnecting the heater mat power connector at the tray.
7. Install the four batteries onto the row 2 tray so that the positive and negative terminals match the arrangement shown in Figure 5-6.
8. Connect the leads from the batteries in row 1 to the terminals of the batteries in row 2 as shown in Figure 5-7. Fit the front retaining plate.
9. Connect the black cable from the power distribution box on the lid to the positive terminal on the left rear battery in row 2.
10. Connect the blue cable from the power distribution box on the lid to the negative terminal on the right rear battery in row 2.

Repeat steps 3 to 9 of the above procedure if a second bank of batteries is to be installed in the housing above the first bank.

Figure 5-4 show a plan view of the batteries in row 1.

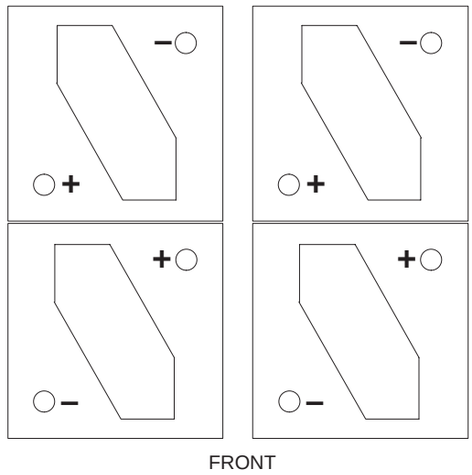

Figure 5-4 Layout for batteries in row 1

Figure 5-5 shows the battery and cable arrangement in row 1.

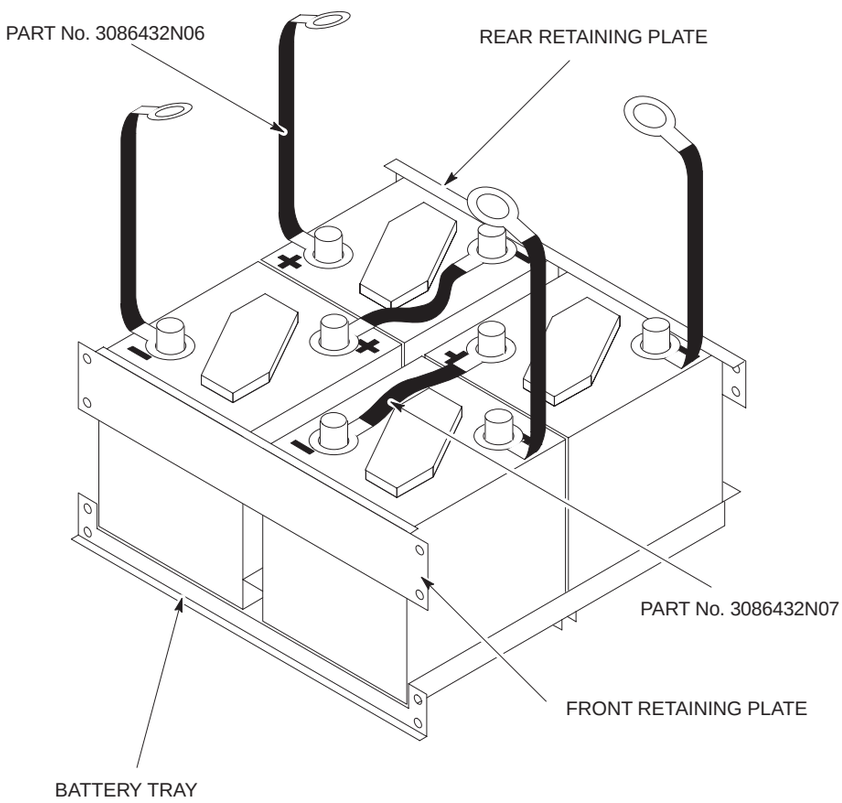

Figure 5-5 Battery arrangement in row 1 with cables attached

Figure 5-6 show a plan view of the batteries in row 2.

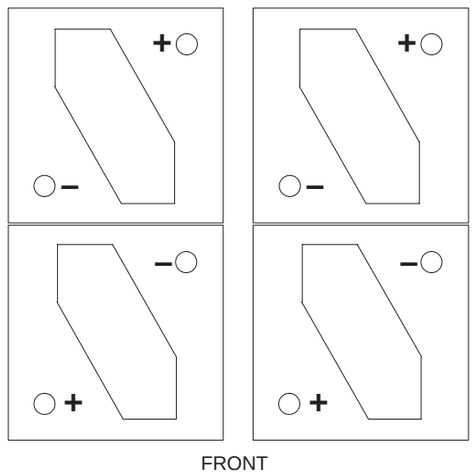

Figure 5-6 Layout for batteries in row 2

Figure 5-7 shows the battery and cable arrangement in row 1.

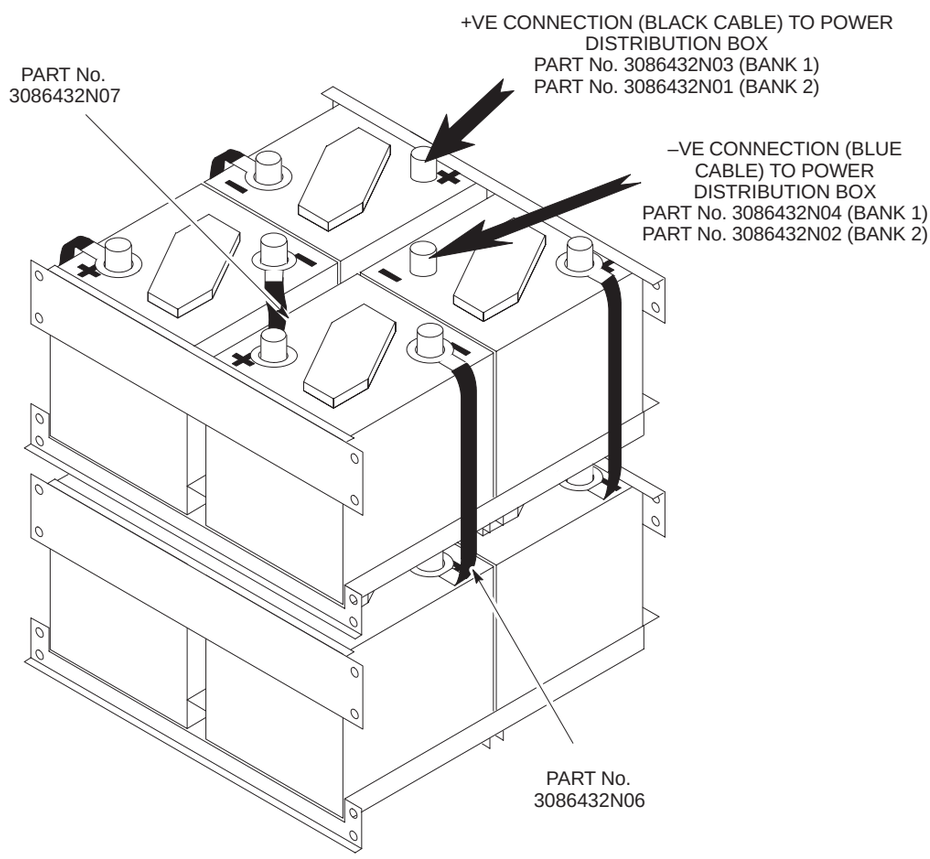

Figure 5-7 Battery arrangement in row 2 with cables attached

Auxiliary equipment housing (AEH) connections

Earthing the AEH

WARNING	Do not daisy chain cabinet earths together. Do not make ac input power connections at the main power source at this time. **Connecting input power** is the final installation procedure, carried out as part of commissioning in Chapter 6 of this category. Cabinets must be earthed with a conductor capable of carrying the full fault current of the overcurrent protection device.

To earth the AEH:

WARNING	The AEH centre cross beam earth stud is connected to the right side earth plate when supplied. The AEH can be earthed at either side, however, if left side AEH earth plate is to be connected to site earth, centre cross beam earth stud **must** be disconnected from right side and reconnected to left side AEH earth plate.

1. Connect the earth plate stud to the site earth using a 35 mm^2 cross-sectional area, green and yellow sheathed, stranded conductor.
2. Ensure the earth stud on the cabinet centre cross beam is connected to the AEH earth plate that is to be connected to the site earth, or to the BTS cabinet earth plate, through the expansion plate.

Connecting dc cables to the AEH

CAUTION	When using external batteries, the Horizon*macro* outdoor BTS cabinet internal batteries must be switch isolated to ensure correct operation of the temperature-compensated battery charging system.

The auxiliary equipment cabinet requires –48 V dc connections to operate. The dc cables come from the Anderson connectors on the dc interface panel in the BTS cabinet. The dc cables from the BTS cabinet connect to the rear pair of Anderson connectors at the base of the power distribution box.

The supply to the auxiliary equipment housing can be isolated using the EXT BATT circuit breaker on the dc circuit breaker panel in the main cabinet.

Battery power from the auxiliary equipment housing to the main cabinet can be isolated using the circuit breakers on the front of the power distribution box.

The front pair of Anderson connectors on the power distribution box can be used to connect either a second BTS cabinet, (refer to **Configuring battery backup** in this chapter), or an additional auxiliary equipment housing, thus connecting the batteries in parallel to provide extra battery capacity, further increasing backup duration..

Connecting the alarm signal cables

The alarm signal cable from the alarms interface board in the main BTS cabinet plugs into the connector PL1 on the front right of the power distribution box. PL2 is for connection to the alarms interface board of a second BTS cabinet, and PL3 is to allow connection of a second AEH The cables are labelled for identification. PL1, PL2 and PL3 are accessed through an opening in the front face of the power distribution box.

Internal connections in the AEH

Six additional flying leads are connected to the power distribution box:

- One provides power to the fan.
- Four provide power to the heater mats
- One connects to the door microswitch.

All leads are labelled clearly for identification.

Configuring battery backup to supply two BTS cabinets

Introduction to configuring battery backup

The circuit breakers in the power distribution box are linked in parallel when supplied. The links must be removed if two BTS cabinets are to be connected to one auxiliary equipment housing.

The power distribution box must be removed to gain access to the parallelling links and refitted after the links have been removed.

Removing the power distribution box

The procedure for removing the power distribution box from the auxiliary equipment housing is as follows:

WARNING	The batteries are capable of supplying high short circuit currents and as such provides a high energy hazard. Isolate the auxiliary equipment housing from the main cabinet by switching off the EXT BATT circuit breaker on the dc circuit breaker panel in the main cabinet before commencing work.

1. Open the cabinet door, release the lid latch and raise the lid.
2. Switch off the circuit breakers on the front of the power distribution box and then disconnect the dc input cables, (if fitted), from the Anderson connectors on the left side of the power distribution box.
3. Unplug the alarm signal cables from PL1, PL2 and PL3 on the front of the power distribution box.
4. Disconnect the two cables which connect the top bank of batteries (bank 2, row 2) to the power distribution box and tie the cables safely out of the way. Undo the battery terminal connections between bank 2, row 2 and bank 2, row 1 and then remove the row 2 battery tray, followed by the row 1 battery tray.
5. Disconnect the two cables which connect battery bank 1, row 2 to the power distribution box and tie the cables safely out of the way.
6. Undo the eight M4 nuts which secure the power distribution box to the lid and then remove the box.
7. Unplug the door microswitch alarm cable from the external alarm interface board.
8. Unplug the power cables for the heater mats and the fan from the external alarm interface board.

The parallelling links can now be removed.

Interior view of power distribution box

Figure 5-8 shows the interior of the power distribution box, with the components for battery backup configuration identified.

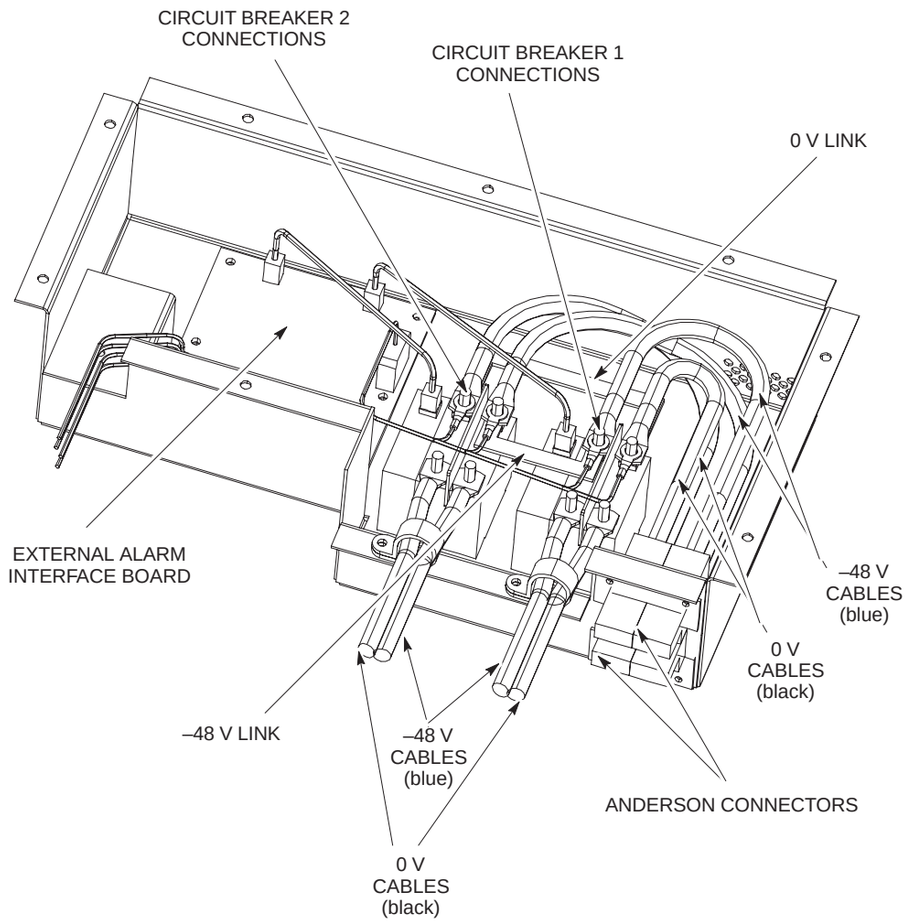

Figure 5-8 Interior of power distribution box

Removing the parallelling links

To remove the parallelling links refer to Figure 5-8 and:

1. Ensure the power distribution box is disconnected from the –48 V dc supply and the batteries.
2. Remove the four M6 nuts, plain washers and star washers, securing the cables from the Anderson connectors to the circuit breakers, and retain.
3. Note the location and insulation colour of the four ring terminals connected to the external alarm interface board, and remove from the circuit breaker studs.
4. Remove the four terminals connecting the Anderson connectors to the circuit breakers, noting the position of each terminal.
5. Remove the 0 volt link and the –48 volt link from the circuit breakers.
6. Refit the black 0 volt and the blue –48 volt cable terminals to the outer stud on each circuit breaker, in the position previously noted in step 4.
7. Refit the four ring terminals from the external alarms interface board to the circuit breakers, in the locations noted in step 3.
8. Ensure that the insulation colour of all refitted cables is correctly matched.
9. Refit the four M6 star washers, plain washers and nuts, and tighten to the correct torque, (see **Site requirements and considerations** in Chapter 2 of this category).

The power distribution box can now be refitted.

Refitting the power distribution box

The procedure for refitting the power distribution box is as follows:

1. Connect the power cables for the heater mats and the fan to the external alarm interface board.
2. Connect the alarm cables for the door microswitch to the external alarm interface board.
3. Mount the power distribution box onto the underside of the lid and secure in position using the M4 nuts.
4. Connect the longer pair of battery cables from the power distribution box to their terminals on battery bank 1, row 2. The blue cable connects to negative and the black cable connects to positive.
5. Install the bank 2, row 1 battery tray, followed by the bank 2, row 2 battery tray and then remake the terminal connections between the two rows (refer to *Installation and Configuration: (GSM-204-423)* **Installing batteries in the auxiliary equipment housing** if necessary. Connect the remaining pair of battery cables to the positive and negative terminals on the top bank of batteries.
6. Connect the alarm signal cables to PL1, PL2 and PL3 on the front of the power distribution box.
7. Connect the dc power cables from one BTS cabinet to the rear pair of Anderson connectors on the power distribution box. Connect the dc power cables from the second BTS cabinet to the front pair of Anderson connectors.
8. Switch on the circuit breakers on the front of the power distribution box and then close the lid and the cabinet door.
9. Switch on the EXT BATT circuit breaker on the dc circuit breaker panel in the main cabinet.

The procedures for configuring the battery backup to supply two BTS cabinets are now complete.

Chapter 6

Interoperability between different Motorola BTSs

Chapter 6
Interoperability between different Motorola BTSs i

Introduction to interoperability . . . . . Inst. 6–1
Mixed product sites . . . . . Inst. 6–1
Architectural constraints . . . . . Inst. 6–1

BTS architectures and interoperability . . . . . Inst. 6–2
M-Cell6 and Horizonmacro architectures . . . . . Inst. 6–2
Example mixed site . . . . . Inst. 6–3
Technical issues . . . . . Inst. 6–4
Receive path . . . . . Inst. 6–4
Transmit path . . . . . Inst. 6–7
M-Cell6 and Horizonmacro hardware equivalents . . . . . Inst. 6–10
Further configuration information . . . . . Inst. 6–10
Example configurations . . . . . Inst. 6–11
Special hardware . . . . . Inst. 6–14

Introduction to interoperability

Mixed product sites

This chapter describes how the Horizon*macro* 6 carrier outdoor can be used in conjunction with other Motorola BTS products.

Different Motorola product types can be collocated at the same physical site without restriction, provided they are configured as logically separate installations, and in accordance with the normal product engineering rules.

When mixed product types are installed at the same logical site, a number of technical issues arise that restrict the hardware that can be configured, and the way it is interfaced. This chapter explains which product types can be mixed in this way, and how they are interfaced.

NOTE	This chapter only applies to the Horizon*macro* GSM/EGSM900 and DCS1800 BTS variants. GSM850 and PCS1900 Horizon*macro* BTS variants cannot be mixed with other Motorola BTS types.

Architectural constraints

To enable different product types to be used at the same logical site, one product type is chosen as master, which is connected to the extender equipment so that the two product types can function as a single, logical BTS. This approach is viable when the product types to be interfaced have similar architectures.

Motorola BTS product types that can be interfaced for collocation at a single logical site are therefore restricted to those shown in Table 6-1 below.

Table 6-1 BTS compatibility for collocation at a single logical site

Master	**Extender**			
	InCell	M-Cell*2*	M-Cell*6*	Horizon*macro*
InCell	Discontinued	No	No	No
M-Cell*2*	No	Yes*	Yes*	No
M-Cell*6*	No	No	Yes*	Yes
Horizon*macro*	No	No	Yes*	Yes
* Check for availability before ordering				

Indoor and outdoor cabinets can be mixed, but different mechanical arrangements may be required for routeing the inter-cabinet cabling.

BTS architectures and interoperability

M-Cell*6* and Horizon*macro* architectures

Figure 6-1 represents the high level architecture of the M-Cell*6* and Horizon*macro* BTSs. Both systems provide an optical interface for connection to remote transceivers, which in a normal installation would be used to connect to transceivers of the same product type.

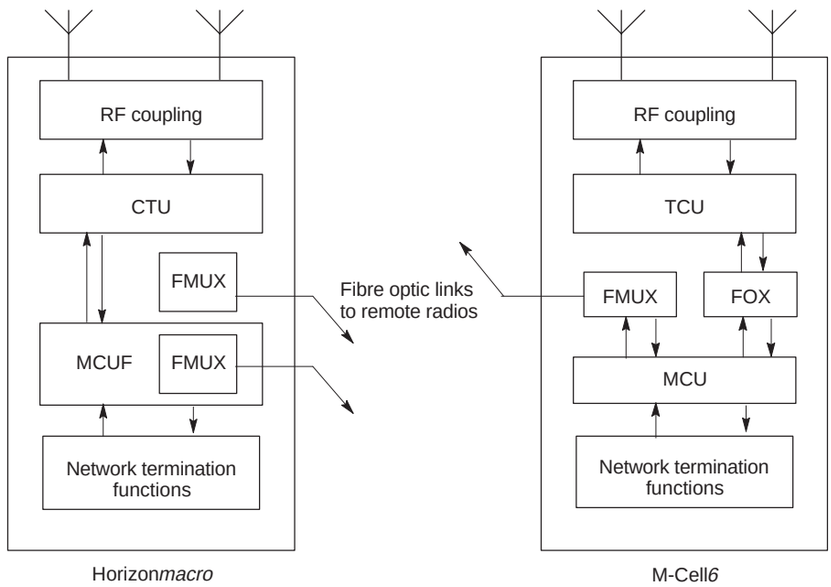

Figure 6-1 High level architecture of M-Cell*6* and Horizon*macro* BTSs

However, since the optical interface is identical for both products, it can be used to link an M-Cell*6* to Horizon*macro* transceivers, or a Horizon*macro* to M-Cell*6* transceivers. The principle is shown in Figure 6-2.

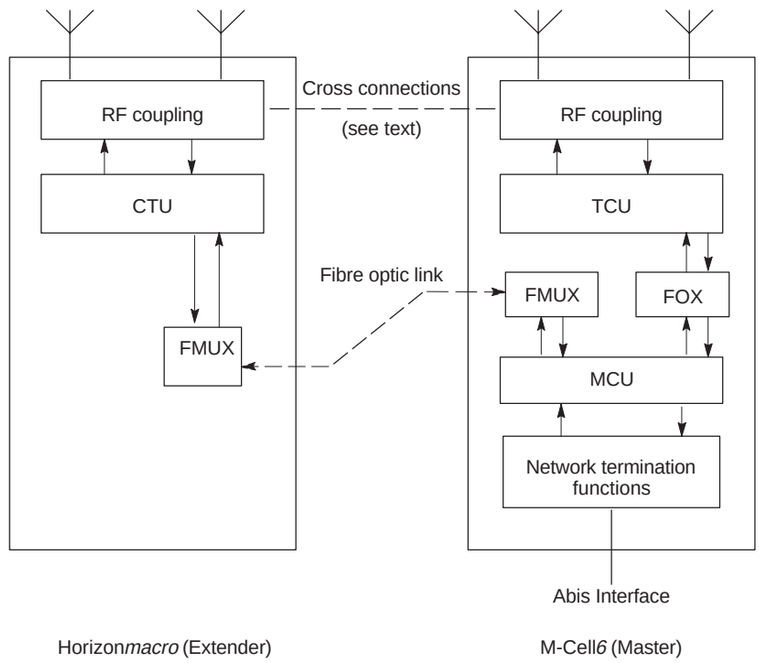

Figure 6-2 Example of interfacing different products at a single logical site

When two product types are interfaced in this way, the control function for the entire BTS is implemented by the master product. In Figure 6-2, this is the M-Cell*6*. In practice, either BTS can be configured as master according to the needs of the network concerned.

Example mixed site

A multi-cabinet mixed site can typically be achieved in several ways. Figure 6-3 shows the alternatives layouts for a four cabinet mixed BTS site.

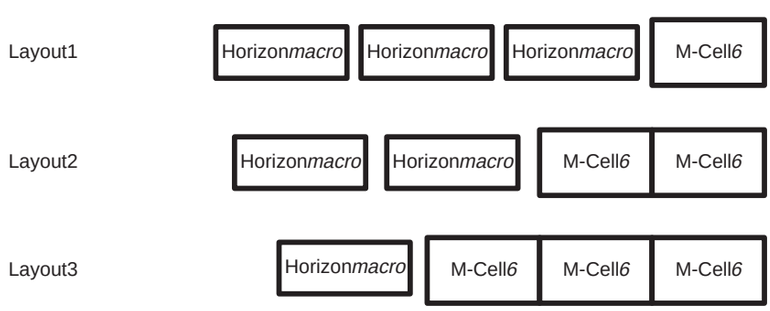

Figure 6-3 Example of alternative layouts for a 4-cabinet mixed BTS site

Technical issues

When mixing different BTS types, the interface may be required to resolve some or all of the following issues, depending on the site configuration:

- The interface must deliver both Rx and Rx_{div} (receive diversity) signals to each transceiver.
- The interface must not change the uplink (receive) signal level delivered to any transceiver.
- The interface must ensure that in the mixed BTS configuration, RF combiners remain correctly loaded.

Receive path

When a cell is wholly configured within one cabinet, there is no requirement to connect the uplink or downlink RF signals between the master and extender cabinets. The only interface between the cabinets in this type of mixed BTS configuration is therefore at digital level, between FMUXs via the fibre optic link.

When a cell is split between two cabinets, the uplink signals must be connected between the cabinets since both Rx and Rx_{div} signals are required at each transceiver. In this situation the downlink signal may or may not require connection between cabinets, depending on the site configuration. The uplink connectivity requirements are shown in Figure 6-4 (DCS1800) and Figure 6-5 (GSM900).

DCS1800

Refer to Figure 6-4. In the Horizon*macro* cabinet, low noise amplification in the SURF module first boosts the Rx signal by +13 dB. Separate Rx outputs from the SURF are then discretely routed to relevant transceivers in the master cabinet, and to the LNA in the extender cabinet. Since the LNA boosts the Rx signal by a further +13 dB, a 13 dB attenuator is placed in the signal path to offset this additional signal gain, which would otherwise result in signal levels outside the permitted range for the transceivers.

The Rx_{div} signal is similarly given a +13 dB boost by the LNA in the extender cabinet. Separate Rx_{div} outputs from the LNA are then discretely routed to relevant receivers in the extender cabinet, and to the SURF module in the master cabinet. Since the SURF provides a further +13 dB boost, a 13 dB attenuator is again placed in the signal path to offset this additional gain.

In this way, the arrangement shown in Figure 6-4 delivers Rx and Rx_{div} signals to the uplink path in both cabinets, at the required signal level.

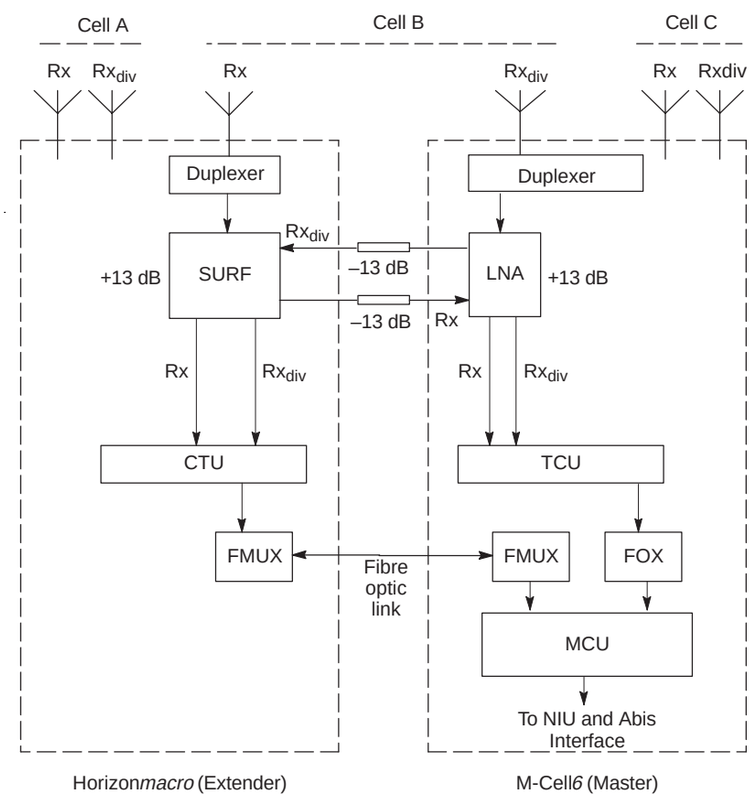

Figure 6-4 Functional overview of the receive path for a DCS1800 split cell configuration

GSM900

Refer to Figure 6-5. In GSM900 products, RF gain for the IADU and SURF is configurable. A split cell configuration is therefore dealt with in the same way as that described for DCS1800, except that the 13 dB attenuators are not required. Instead, the required signal level is maintained by using appropriate gain settings for the IADU and SURF.

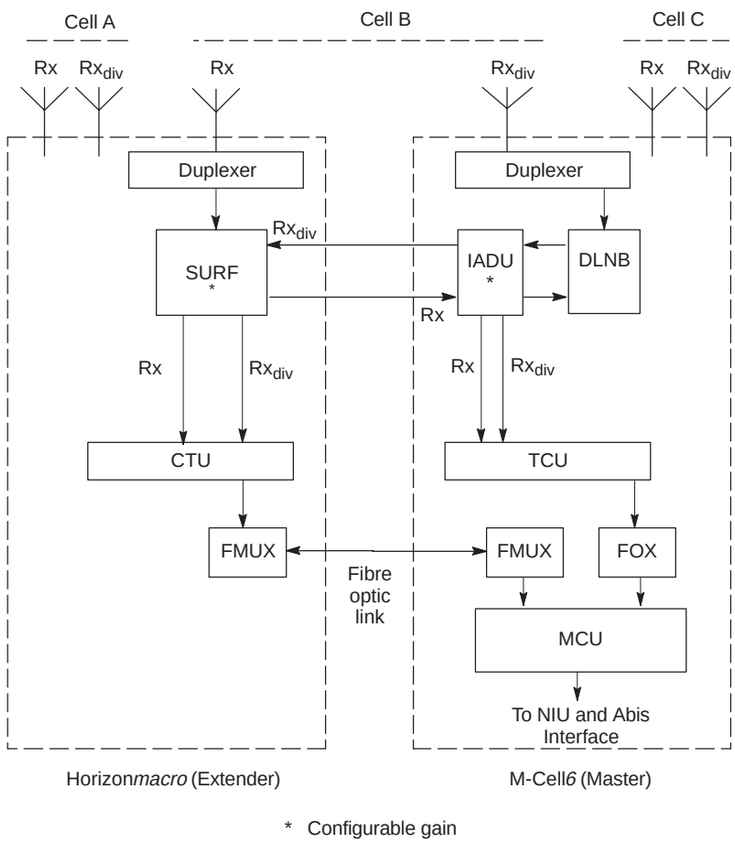

Figure 6-5 Functional overview of the receive path for a GSM900 split cell configuration

Transmit path

M-Cell*6* combining

When configuring the downlink paths for a cell using three carriers or more, it may be necessary to provide additional external RF load(s) for the combiners. This is illustrated by Figure 6-6, which shows a typical M-Cell*6* combining arrangement for a 4-carrier cell.

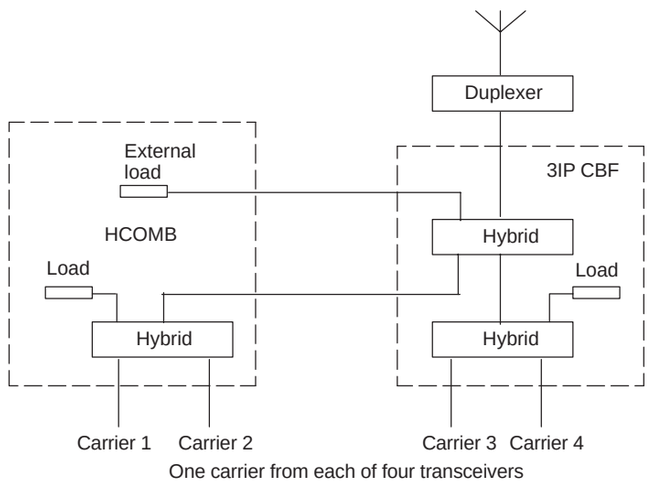

Figure 6-6 Typical M-Cell*6* arrangement for combining four carriers

Carriers 1 and 2 are combined in a hybrid combiner (HCOMB) module. The output from this module provides one of the three inputs to the 3IP CBF. The HCOMB is equipped with an internal RF load, and is therefore self–contained. The 3IP CBF requires one RF load for each of the two hybrids it contains, but is equipped with only a single internal RF load. An additional load is therefore provided for this purpose on the HCOMB casing.

Horizon*macro* combining

A similar arrangement is used in the Horizon*macro*, which uses a Hybrid Combiner Unit (HCU) and Dual stage Duplexed combining Filter (DDF), as shown in Figure 6-7. The DDF has three input ports together with two internal RF loads, and therefore does not require the addition of any external load.

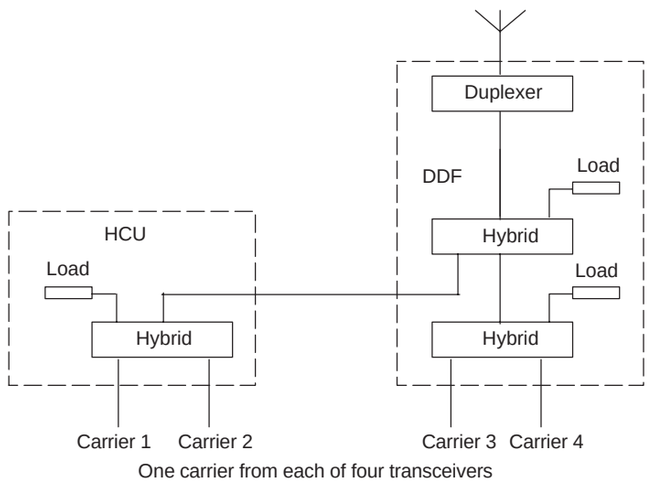

Figure 6-7 Typical Horizon*macro* arrangement for combining four carriers

Mixed equipment combining

When the two different product types are interfaced, a situation can arise where a 3IP CBF is connected to an HCU, as shown in Figure 6-8. In this configuration it is therefore necessary to provide an additional external RF load for this 3IP CBF. The example in Figure 6-8 shows downlink connections for a 4/4/4 configuration using mixed BTS types.

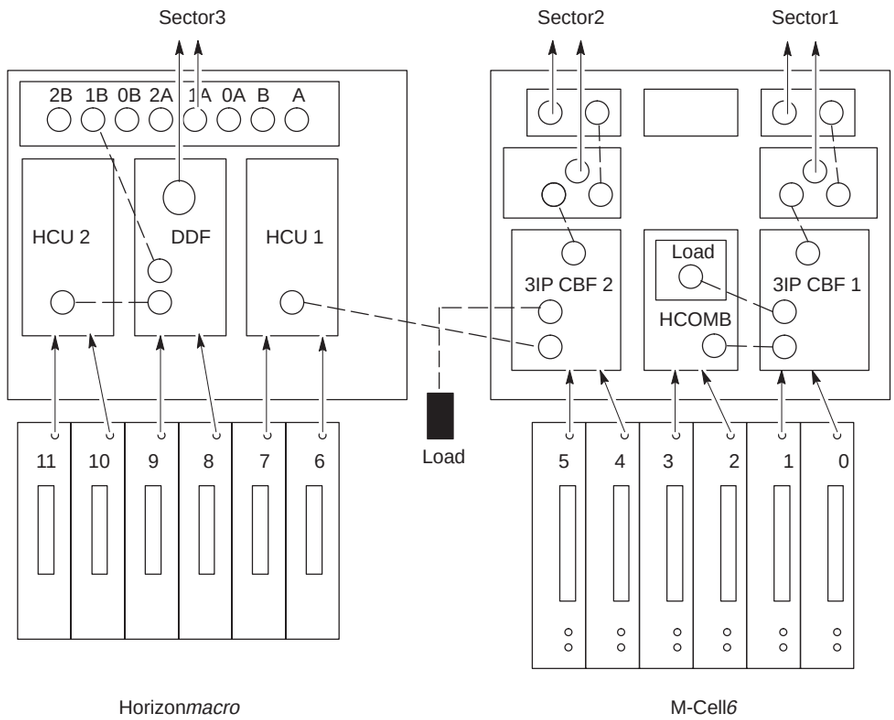

Figure 6-8 Downlink configuration for a 4/4/4 mixed cabinet installation.

Inputs for the DDF are carriers 8 and 9, together with the output of HCU2. The DDF contains two RF loads and is therefore self-contained. Inputs to 3IP CBF1 are carriers 0 and 1, together with the combined output of HCOMB. 3IP CBF1 contains a single load and is therefore connected to the external load mounted on HCOMB. Inputs for 3IP CBF2 are carriers 4 and 5, together with the output of HCU1, from the master cabinet. 3IP CBF2 contains a single load and therefore requires the addition of an external 50 ohm load, as shown.

M-Cell*6* and Horizon*macro* hardware equivalents

Table 6-2 shows the RF hardware equivalents for the Horizon*macro* and M-Cell*6* BTSs.

Table 6-2 RF hardware equivalents for Horizon*macro*/M-Cell*6*

Horizon*macro* 900/1800	M-Cell 900	M-Cell 1800
DCF	CBF + duplexer	Hybrid + duplexer
DDF	3- input CBF* + duplexer	2 x hybrid + dup/BPF
HCU	Hybrid	Hybrid
Feedthrough plate	Non-hybrid	(no equivalent)
TDF	TBF + duplexer	2 x dup/BPF
CCB master	CCB master	CCB master
CCB extender	CCB extender	CCB extender
SURF	3 x DLNB + IADU	3 x LNA
Split Sector Cable	Rx Extender	(no equivalent)

* 3-input CBF contains only one internal 50 ohm load.

Further configuration information

Provided the functional guidelines described in this chapter are followed, the steps involved in upgrading an existing site with mixed equipment are essentially the same as with a conventional upgrade:

- Determine the number of additional carriers required in the upgraded site.
- Based on the required site configuration (for example, 4/4/4), use the functional guidelines provided in this chapter to decide the most effective hardware configuration for the additional cabinet(s).
- Special upgrade kits are available for specified configurations.
- Configuration diagrams and product ordering help are available from the Motorola local office.

Example configurations

Configuration diagrams provided by the Motorola local office show top of rack cable and antenna connections for mixed product configurations, together with details of external RF loads required. Figure 6-9, Figure 6-10 and Figure 6-11 are examples of the type of diagram that can be provided.

GSM900 2/2/2 configuration using two cabinets

In this configuration, there are no split cells, and therefore no uplink/downlink connections between the cabinets. The CBFs are 2-input devices, consequently no external RF loads are required.

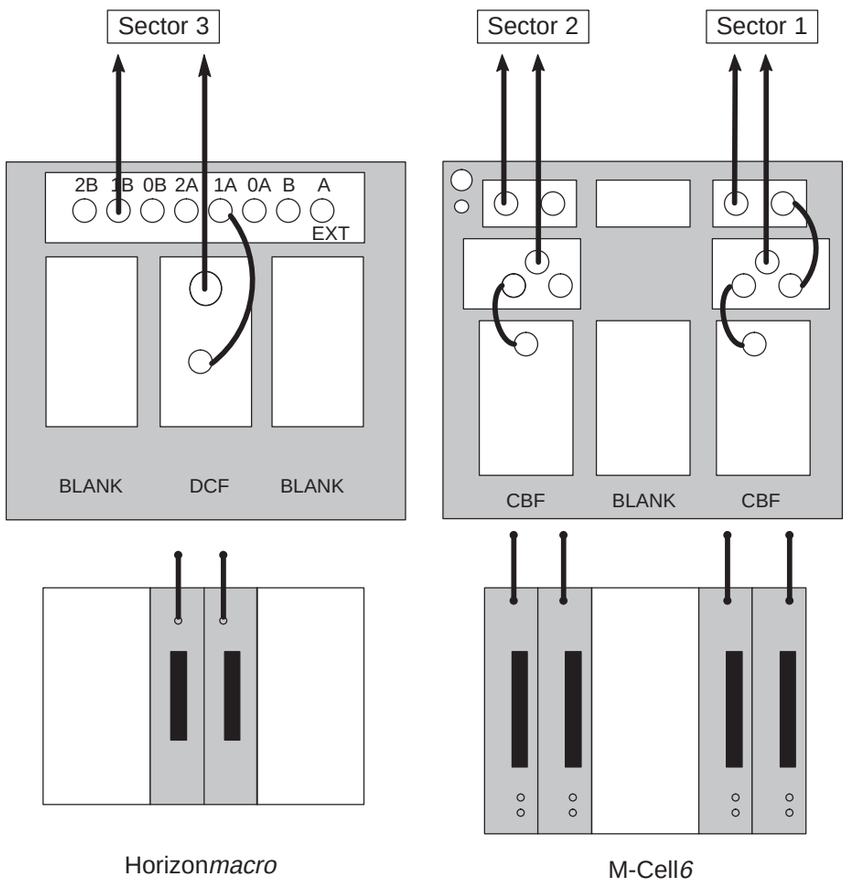

Figure 6-9 GSM900 mixed Horizon*macro* / M-Cell*6* 2/2/2 configuration using two cabinets

GSM900 5/5 configuration using two cabinets

In this configuration, there are no split cells, and therefore no uplink or downlink connections between the cabinets. In the M-Cell*6* cabinet, both 3IP CBFs are configured with external loads provided by the NON HYB. In the Horizon*macro,* one DDF has two direct RF inputs, plus a third input via the FEEDTHRU. The second DDF has two RF inputs, one direct and one via the FEEDTHRU. This arrangement facilitates using the transceivers in sequence. The two 50 ohm loads are required to terminate the unused DDF/3IP CBF input ports.

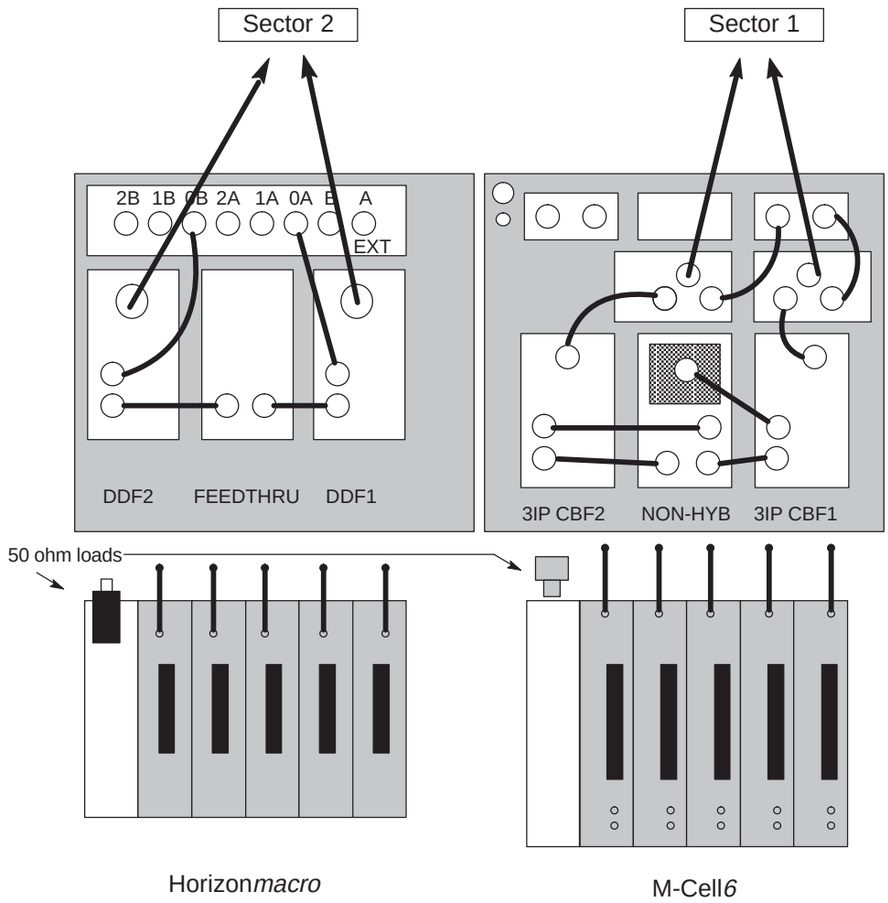

Figure 6-10 GSM900 mixed Horizon*macro* / M-Cell*6* 5/5 configuration using two cabinets

DCS1800 4/4/4 configuration using two cabinets

In this configuration, sector 2 is split between the cabinets. The uplink Rx and Rx_{div} signals for sector 2 are therefore connected between the BTS types to ensure the availability of both signals in both cabinets. In the M-Cell*6* cabinet, 2-input hybrids are used for combining, each configured with a discrete external load.

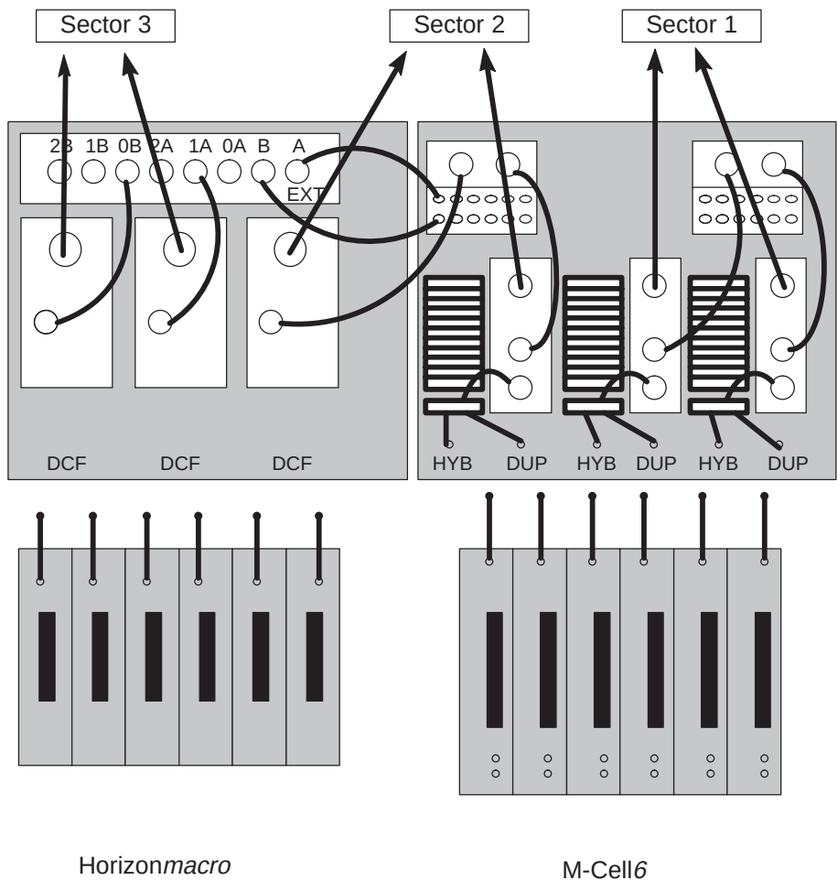

Figure 6-11 DCS1800 Mixed Horizon*macro* / M-Cell*6* 4/4/4 configuration using two cabinets

Special hardware

A range of cables is available for uplink, downlink and fibre optic connections, together with the uplink attennuators described earlier. Contact the Motorola local office for further details.

In addition, the mounting plate and snap-in multi cable gland shown in Figure 6-12 are required when expanding M-Cell*6* outdoor sites with Horizonmacro cabinets. In this type of configuration, the Horizon*macro* equipment is located to the left of the M-Cell*6* cabinets.

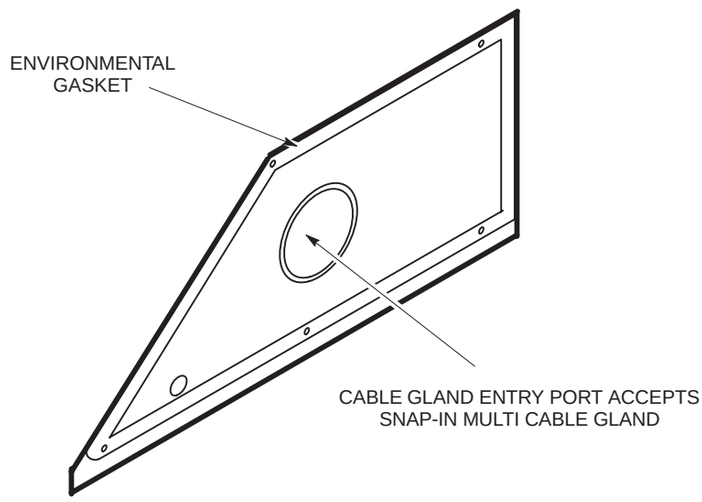

Figure 6-12 Special cable gland plate required for mixed M-Cell*6* and Horizon*macro* installations

The mounting plate is located as shown in Figure 6-13 in place of the original blanking plate fitted to the M-Cell*6*.

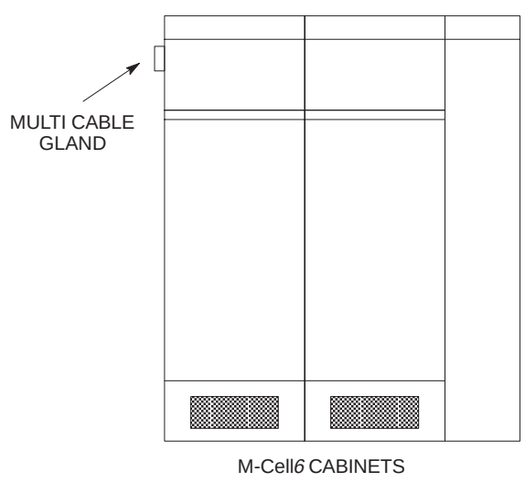

Figure 6-13 Location of the snap-in multi cable gland and mounting plate in the M-Cell*6*

Chapter 7

Commissioning of outdoor cabinet

Chapter 7
Commissioning of outdoor cabinet i

Commissioning overview . . . . . Inst. 7–1
- Overview of commissioning . . . . . Inst. 7–1
- PC to MCUF cable pin connections . . . . . Inst. 7–1
- Test equipment . . . . . Inst. 7–2

Pre-power up checks . . . . . Inst. 7–3
- Overview of pre-power up checks . . . . . Inst. 7–3
- Visual inspection . . . . . Inst. 7–4
- Request for connection . . . . . Inst. 7–4
- Earth continuity check . . . . . Inst. 7–5
- AC power system insulation check . . . . . Inst. 7–5

Connecting input power . . . . . Inst. 7–6
- Pre-connection checks . . . . . Inst. 7–6
- Connecting ac power . . . . . Inst. 7–6
- Connecting to a single phase ac power supply . . . . . Inst. 7–6
- Connecting to a three phase (star) ac power supply . . . . . Inst. 7–7
- Connecting to a three phase (delta) ac power supply . . . . . Inst. 7–7

Powering up the cabinet . . . . . Inst. 7–8
- Power-up overview . . . . . Inst. 7–8
- Power up procedure without code load . . . . . Inst. 7–8
- Power down of the cabinet . . . . . Inst. 7–10
- Power up procedure with code load . . . . . Inst. 7–11
- Installation and configuration . . . . . Inst. 7–14
- Components involved in power up procedures . . . . . Inst. 7–15

Testing the thermal management system (TMS) . . . . . Inst. 7–16
- Overview of TMS test . . . . . Inst. 7–16
- Test facilities . . . . . Inst. 7–16
- Diagram of TMS airflow . . . . . Inst. 7–17
- Test procedure . . . . . Inst. 7–18

Testing the battery backup . . . . . Inst. 7–19
- Overview of battery backup test . . . . . Inst. 7–19
- Battery backup test procedures . . . . . Inst. 7–19

Sample form 1: Request for connection . . . . . Inst. 7–21

Sample form 2: Completion and inspection form . . . . . Inst. 7–23

Commissioning overview

Overview of commissioning

This chapter provides information required for the commissioning of cabinets and their internal and external interfaces.

NOTE	Some equipment at the site may not be produced by Motorola, including power supplies, customer communications equipment and antennas. Refer to site specific documentation and the non-Motorola vendor instructions.

All site preparation (Chapter 2) and equipment installation (Chapter 3) must be completed before commissioning. Commissioning consists of the following:

- Pre-power up checks.
- Powering up the cabinet.
- Optimization procedures as described in *Installation and Configuration: BSS Optimization (GSM-100-423) 68P02901W43*, issue G or later.

PC to MCUF cable pin connections

Figure 7-1 shows the pin connections for the personal computer (PC) to MCUF test cable. These are standard null modem pin connections.

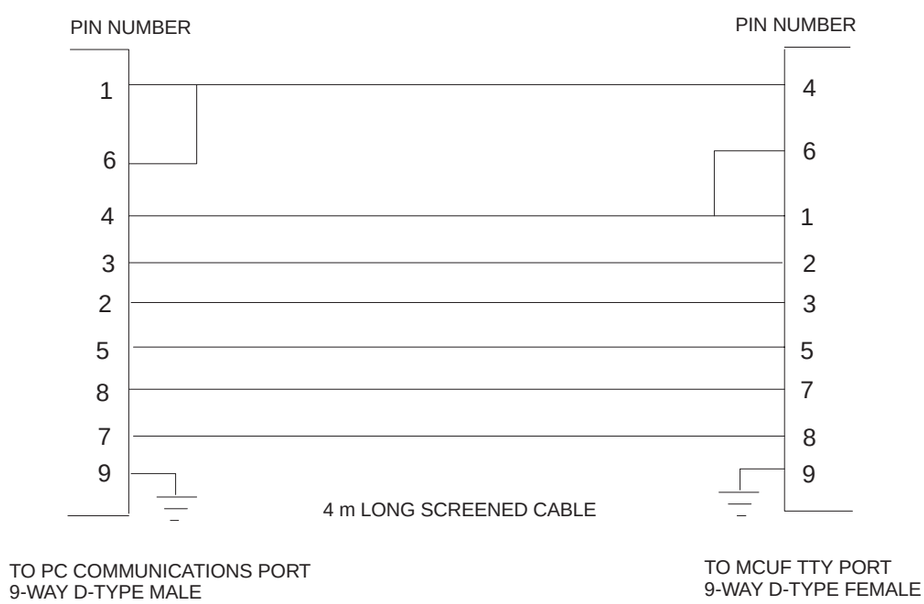

Figure 7-1 9-way to 9-way PC to MCUF cable pin connections

Test equipment

Table 7-1 provides details of the test equipment required to perform the commissioning procedures in this chapter.

Table 7-1 Test equipment required for commissioning

Quantity	Description	Comments
1	IBM compatible portable Personal Computer (PC) (486 DX2 or DX4 minimum)	The basic requirements are: TFT colour screen. 170 Mbyte hard drive (minimum). Minimum 4 Mbyte RAM (8 Mbyte recommended). 3.5 inch floppy drive. Serial port. CD-ROM drive (recommended) PCMCIA (Type 2) compatible slot. Windows 3.1 loaded and running in 386 enhanced mode. Battery power.
1	Commercial terminal emulator software	PC PLUS or similar software (suitable for PC being used)
1	Digital multimeter (must be sensitive enough to measure 0.05 ohms)	Hewlett Packard E2378A or equivalent.
1	ESD protection kit	
1	9-way male D-type to 9-way female D-type	For PC to MCUF. Pin connections shown in Figure 7-1.
1	PAT tester	Insulation and earth tester.

Pre-power up checks

Overview of pre-power up checks

This section contains procedures for testing the power system prior to applying power to the cabinet.

WARNING	The power system checks provided in this section must be performed before the equipment is powered up.

WARNING	Up to 415 V ac is present within the cabinet when the cabinet is directly connected to an ac supply. Earth straps are not to be worn during the commissioning of the ac and dc power system. Watches and other jewellery should be removed. Only insulated tools should be used.

CAUTION	This equipment contains CMOS devices and is vulnerable to static discharge. Although the damage may not be immediately apparent, CMOS devices may be damaged in the long term due to mishandling causing barrier breakdown. The approved earth strap (high impedance) must be worn at all times when adjusting or handling the processor cards (but see the warning above, regarding the use of earth straps). If the cabinet door is kept open for long periods of time during commissioning, an alternative method of cooling must be provided to avoid damage to the equipment through overheating.

Visual inspection

Inspect the installation for damage in accordance with BS 7671, 16th Edition (Section 712), or the IEC 364 or local equivalent.

WARNING	If damage is discovered during the visual inspection, the commissioning must not proceed further until the damage has been inspected and rectified by the manufacturers or their representatives.

Power equipment

Examine the power equipment for mechanical damage and report any damage to Motorola.

Ensure all cabinet earth plates are connected to the site earth.

Cabinet structure

Examine the exterior and interior of the cabinets for structural, paint or mechanical damage and report any damage to Motorola.

Weather protection

Check all environmental seals to ensure they are not damaged.

Check that all cables entering the cabinet have grommets fitted at the point of entry to prevent the ingress of water. If any holes in the earth plates are not used, these must have rubber bungs fitted to prevent water entering the cabinet.

Request for connection

Ensure that all correct **Request for connection** and **Completion and inspection form** certificates have been sent to the local electricity supply board.

NOTE	Samples of a typical **Request for connection** and a **Completion and inspection form** are shown in **Sample form 1** and **Sample form 2** at the end of this chapter.

Apply conductive non-oxidizing grease to the earth mat connection on the earth busbar if an earth mat connection is used.

Earth continuity check

Ensure an earth continuity check has been performed on appropriate equipment, if required. Use the digital multimeter to check that the resistance of the test equipment leads is less than 0.05 ohms.

Main equipment earths

Connect the PAT tester to the earth terminal and to the following earth points:

- Antenna feeders.
- AC supply input earth.
  - The local electricity company termination point.
  - AC supply isolator.
  - Number 1 ac distribution box earth terminal block.

NOTE	The external switched isolator will not be connected to earth if it is a double insulated device and will therefore not need to be tested.

- Cabinet earth/connector plates.
- TMS unit chassis.
- Cabinet chassis (rear right stud).
- Power supply unit chassis.
- Doors and lid.
- Auxiliary equipment housing chassis.

Check that the measured resistance is less than 0.1 ohms with the tester connected to a conductive surface (bare metal) at extreme ends of the earth cables.

AC power system insulation check

Ensure an insulation check has been performed on all ac power cables which supply the site up to the ac input to the cabinet. Testing must be carried out in accordance with the BS 7671, 16th Edition (section 713-04–01 to 713-04-06), or IEC 364 equivalent, at the voltage levels shown in Table 7-2, using an approved insulation tester. Check that the resistance at each point is as shown in Table 7-2.

Table 7-2 BS7671 (16th edition) Table 71A (part of)

Parameter	AC test voltage (volts)	Minimum insulation (megaohms)
Up to and including 500 V	500	0.5

When the test has been completed, sign the completion and inspection certificate, a sample of which may be found in **Sample form 2**.

Connecting input power

Pre-connection checks

At this point in the installation, ensure that:

- All cabinet earth plates are connected to the site earth.
- The cabinets are not already connected to the external ac power source.
- The cabinets are connected to the ac power cabling.
- The ac power cabling is routed to the electricity supply company outlet.

WARNING	Do not wear an anti static wrist strap while servicing the power supplies or power distribution cabling, as serious personal injury can result.

Connecting ac power

The **Request for connection** should have been sent to the local electricity supply board when the equipment left the manufacturer.

- Ensure that the **Request for connection** and the **Completion and inspection certificate** have been sent to the electricity supply company.
- Ensure that the cabinet door is open when the electricity company representative is in attendance.

NOTE	If a cable shroud and/or an auxiliary equipment cabinet is to be installed, the installation should be carried out before connecting the ac supply to the main cabinet.

Connecting to a single phase ac power supply

To connect the single phase and earth power cable to the electricity supply outlet:

1. Connect the earth ac cable (green/yellow) to the earth point in the power supply outlet, and secure.
2. Connect the line ac cable (brown or red) to the line connection in the power supply outlet, and secure.
3. Connect the neutral ac cable (blue or black), to the neutral connection in the power supply outlet and secure.
4. Do not connect the screen, but cut it back level with the outer insulation.
5. Refit and secure the ac terminal block insulated cover, and refit the screws and washers.

Connecting to a three phase (star) ac power supply

To connect the earth, 3-phase, and neutral power cables to the electricity supply outlet:

1. Connect the earth ac cable (green/yellow), to the earth point in the power supply outlet and secure.
2. Connect the phase A cable (red), to the red phase connection in the power supply outlet and secure.
3. Connect the phase B cable (yellow), to the blue phase connection in the power supply outlet and secure.
4. Connect the phase C cable (blue), to the yellow phase connection in the power supply outlet and secure.
5. Connect the neutral ac cable (black), to the neutral connection in the power supply outlet and secure.
6. Do not connect the screen, but cut it back level with the outer insulation.
7. Refit and secure the ac terminal block insulated cover, and refit the screws and washers.

Connecting to a three phase (delta) ac power supply

To connect the earth and 3-phase power cables to the electricity supply outlet:

1. Connect the earth ac cable (green/yellow), to the earth point in the power supply outlet and secure.
2. Connect the phase A cable (red), to the red phase connection in the power supply outlet and secure.
3. Connect the phase B cable (yellow), to the blue phase connection in the power supply outlet and secure.
4. Connect the phase C cable (blue), to the yellow phase connection in the power supply outlet and secure.
5. Do not connect the screen, but cut it back level with the outer insulation.
6. Refit and secure the ac terminal block insulated cover, and refit the screws and washers.

Powering up the cabinet

Power-up overview

This procedure assumes all previous procedures have been completed.

CAUTION	Ensure the correct –48/60 V dc PSMs are fitted. Ensure that there is no blockage to ventilation at the base of the cabinet.

Relevant components to power up procedures are shown in Figure 7-2.

Power up procedure without code load

The following procedure should be carried out to power up the cabinet, with no code load. This proves the cabinet hardware is capable of operation. The procedure for cabinet code load is described in the next section.

WARNING	Earth straps are not to be worn during the commissioning of the power system, and watches and other jewellery should be removed. Only insulated tools should be used. The power source must be supplied to the cabinet via a suitable overcurrent protective device and be isolated from the BTS cabinet.

Procedure to prepare the cabinet for power up without code load

Proceed as follows to prepare the cabinet prior to power up:

1. Verify that the power source isolator is set to off.
2. Disconnect all E1/T1 lines from the BTS.
3. If fitted, remove the optional PCMCIA card from the MCUF slot.
4. Set the switch of each PSM to the OUTPUT DISABLE position.
5. Set all circuit breakers in both ac distribution boxes to off.
6. Set all circuit breakers on the PSU dc circuit breaker panel to off.
7. Set the internal and external battery circuit breakers to off.
8. Press and release all push on/push off circuit breaker buttons on the CBM to the **out** (off) position.

Initial power up

To apply initial power to the cabinet:

1. Switch on the external power supply to the cabinet.
2. Set the four pole MCB and the 6 A RCBO in the number 1 ac distribution box to on.
3. Set the TMS fans circuit breaker on the PSU dc circuit breaker panel to on.
4. Set the TMS heater and TOPSM circuit breakers, in the number 2 ac distribution box to on. Check that input healthy (yellow) and output healthy (green) LEDs of each TOPSM illuminate as it is switched on. Check that the radio and comms contactor LEDs on the CAB are illuminated.
5. Carry out a test of the TMS as described in **Testing the thermal management system (TMS)**.

Radio and digital Power up without code load

To apply power radios and digital modules:

1. Turn each PSM switch to the OUTPUT ENABLE position. Check that each PSM has the active (green) LED on and the alarm (red) LED off.
2. Press the CBM circuit breaker button marked **SURF**.
3. Press the CBM circuit breaker button marked **BPSM A** and (if redundant BPSM fitted) **BPSM B**. Check all associated digital module LEDs operate correctly; green LEDs lit on BPSM, NIU and MCUF, and red LEDs off on NIU and MCUF.

NOTE	Both red and green LEDs are initially lit on the NIU while the unit performs a self-test. The red LED will extinguish after approximately 20 seconds, indicating a normal condition.

4. Press the CBM circuit breaker buttons appropriate for the CTUs fitted, and check that the RADIO STATUS LED for each CTU flashes green.

Battery backup and comms power up

To apply power to the backup batteries and communications equipment:

CAUTION	When using external batteries, the Horizon*macro* outdoor BTS cabinet internal batteries must be switch isolated to ensure correct operation of the temperature-compensated battery charging system.

1. Set the external battery or internal battery circuit breaker, depending on backup battery configuration, to on.
2. Test operation of battery backup as described in **Testing the batteruy backup**.
3. Set any comms circuit breakers, appropriate for the customer communications equipment fitted, to on.
4. Close the doors and lid to ensure correct thermal management.

This completes the power up of the cabinet.

Power down of the cabinet

If the cabinet is not required to remain powered up, power down the cabinet as follows:

1. Press all CBM circuit breaker buttons to the **out** (off) position.
2. Switch each PSM to the OUTPUT DISABLE position.
3. Set the internal and external battery circuit breakers to off.
4. Set all circuit breakers on the PSU dc circuit breaker panel to off.
5. Set the number 2 ac distribution box circuit breakers to off.
6. Switch the four pole MCB and 6 A RCBO circuit breakers in the number 1 ac distribution box to off.
7. Switch off the external power supply to the cabinet.

This completes the power down of the cabinet.

Power up procedure with code load

The following procedure should be carried out to power up the cabinet, with code load. The code will be provided either direct from the BSC from the E1/T1 line, or from a PCMCIA card installed in the PCMCIA socket of the master MCUF.

CAUTION	This procedure should only be carried out by experienced field personnel.

Preparing the cabinet for power up with code load

Proceed as follows to prepare the cabinet prior to power up:

1. Make the E1/T1 connection to BSC.
2. Insert (optional) PCMCIA card in MCUF PCMCIA socket.
3. Connect the 9 to 9-way cable from the PC serial A port to MCUF TTY port.
4. Start the terminal emulator program at the PC.
5. Change to Level 3, and at the MMI-RAM> prompt type: **`CTRL N`**
6. Set all circuit breakers in both ac distribution boxes and the PSU dc circuit breaker panel to off.
7. Set the internal and external battery circuit breakers to off.
8. Set the switch of each PSM to the OUTPUT DISABLE position.
9. Press and release all push on/push off circuit breaker buttons to the **out** (off) position.

Initial power up

To apply initial power to the cabinet:

CAUTION	When the two LEDs of the CTU, or the MCUF are flashing, the boot code is downloading into non-volatile memory for software upgrade. Do not remove power or reset the cabinet until downloading has been completed, as this will corrupt the non-volatile memory. If the boot code is corrupted, contact Motorola Customer Network Resolution Centre and request the boot code restoration procedure and the appropriate boot code file.

1. Switch on the external power supply to the cabinet.
2. Set the four pole MCB and the 6 A RCBO, in number 1 ac distribution box, to on.
3. Set the TMS fans circuit breaker on the PSU dc circuit breaker panel to on.
4. Set the TMS heater and TOPSM circuit breakers, in the number 2 ac distribution box to on. Check that input healthy (yellow) and output healthy (green) LEDs of each TOPSM illuminate as it is switched on. Check that the radio and comms contactor LEDs on the CAB are illuminated.
5. Carry out a test of the TMS as described in **Testing the thermal management system (TMS)**.

Radio and digital Power up with code load

To apply power radios and digital modules:

1. Turn each PSM switch to the OUTPUT ENABLE position. Check that each PSM has the active (green) LED on and the alarm (red) LED off.
2. Press the CBM circuit breaker button marked **SURF**.
3. Press the CBM circuit breaker button marked **BPSM A** and (if a redundant BPSM is fitted) **BPSM B**. Check all associated digital module LEDs operate correctly; green LEDs lit on BPSM, NIU and MCUF, and red LEDs off on NIU and MCUF.

   MCUF initialization will commence at power up. A connection to the BSC will be established and code download will take place. After completion of the download, the site will be initialized.

NOTE	Both red and green LEDs are initially lit on the NIU while the unit performs a self-test. The red LED will extinguish after approximately 50 seconds when rebooting after a code download.

CAUTION	If the code is a different version, the non-volatile memory will be upgraded at this point. Both LEDs will be flashing, and a warning message will appear on the PC terminal. Do not power down or reset the cabinet as this will corrupt the non-volatile memory. If this happens, contact Motorola Customer Network Resolution Centre and request the boot code restoration procedure and the appropriate boot code file.

4. Press the CBM circuit breaker buttons for the appropriate CTUs fitted, and check that the **RADIO STATUS** LED for each CTU flashes green.

   At this point, after the MCUF has initialized, the CTUs will download code from the MCUF.

CAUTION	If the code is a different version, the non-volatile memory will be upgraded at this point. Both LEDs will be flashing. Do not power down or reset the cabinet as this will corrupt the non-volatile memory. If this happens, contact Motorola Customer Network Resolution Centre and request the boot code restoration procedure and the appropriate boot code file.

5. Once fully initialized, the **RADIO STATUS** LED on the front of each CTU should be green, and each **TRANSMIT STATUS** LED should be either off or yellow.
6. Disconnect the 9 to 9-way cable from the MCUF TTY port.

Battery backup and comms power up

To apply power to the backup batteries and communications equipment.

CAUTION	When using external batteries, the Horizon*macro* outdoor BTS cabinet internal batteries must be switch isolated to ensure correct operation of the temperature-compensated battery charging system.

1. Set the external battery or internal battery circuit breaker, depending on the backup battery configuration, to on.
2. Test operation of battery backup as described in **Testing the batteruy backup**.
3. Set any comms circuit breakers, appropriate for the customer communications equipment fitted, to on.
4. Close the doors and lid to ensure correct thermal management.

This completes the power up of the cabinet.

Installation and configuration

Consult *Installation and Configuration: BSS Optimization (GSM-100-423 68P02901W43)* for further procedures associated with ensuring a new site is fully operational and optimized.

Components involved in power up procedures

Figure 7-2 shows the cabinet components involved in power up procedures.

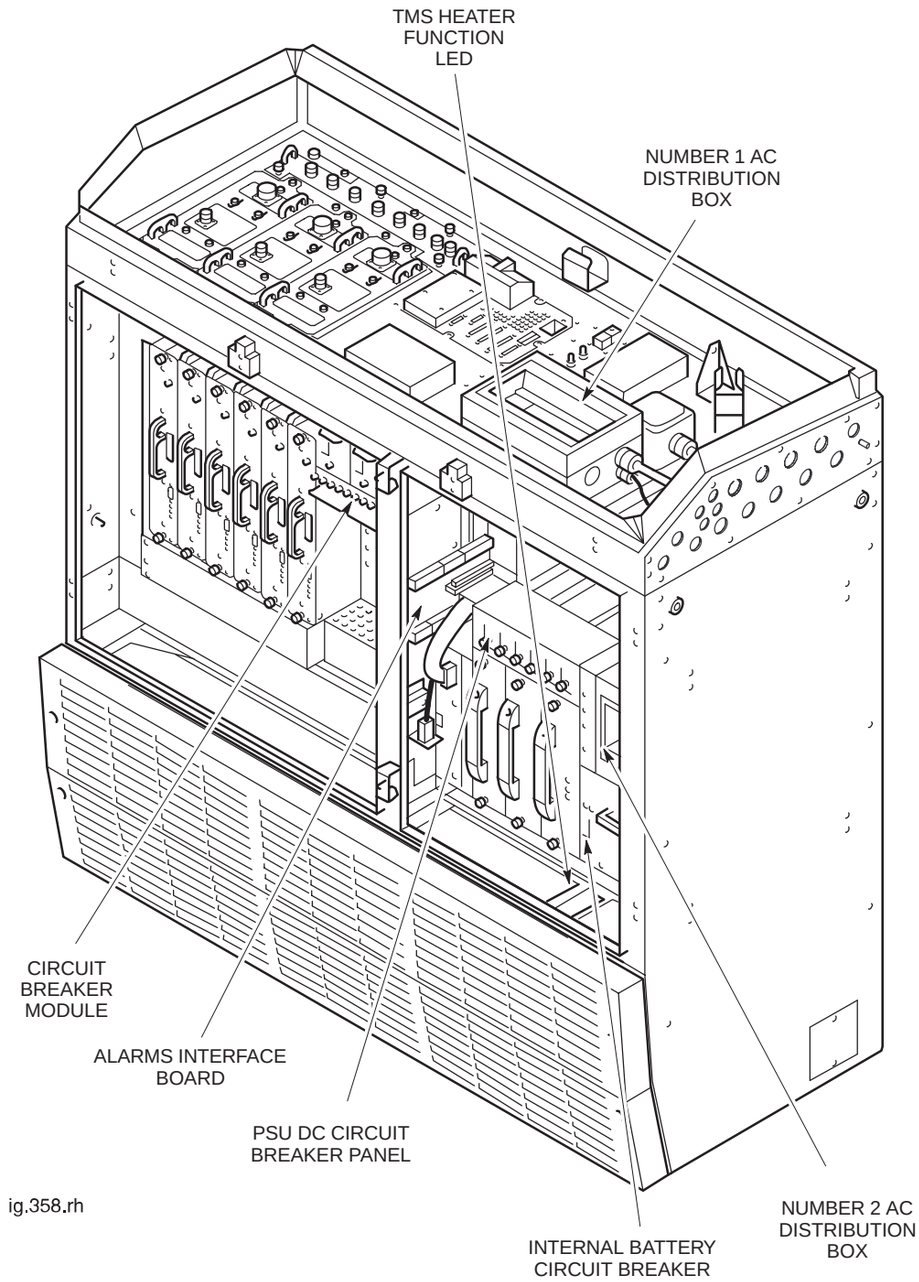

Figure 7-2 Location of components involved in power up procedures

Testing the thermal management system (TMS)

Overview of TMS test

Objective

The TMS test verifies whether or not the TMS is operating correctly.

Test equipment

The TMS test does not require any test equipment.

Commands

The TMS test does not require any software commands.

Test facilities

A four button test switch is mounted on the alarms interface board next to the power supply unit (PSU).

Provision is made to perform the following tests:

- Operate the fans (minimum speed).
- Change the recirculation air (internal) fan speed.
- Change the ambient air (external) speed.
- Operate the heater.

NOTE	Heater function is indicated by the illumination of an LED, mounted on the rear vertical wall at the top right of the recirculation air outlet aperture, below and in front of the power supply enclosure.

Diagram of TMS airflow

Figure 7-3 shows the airflow paths through the cabinet and TMS unit.

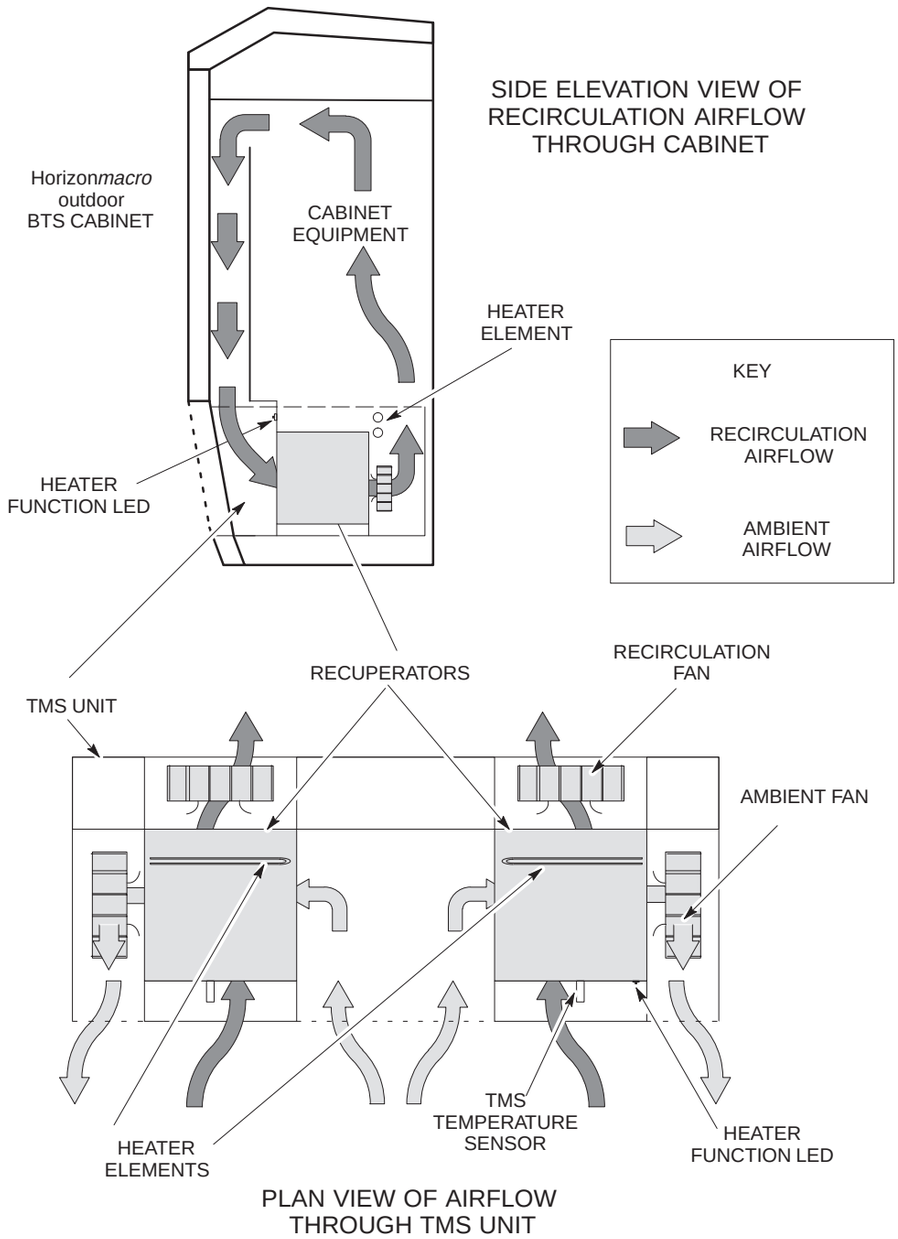

Figure 7-3 TMS airflow paths

Test procedure

Figure 7-4 shows the layout of the alarms interface board and shows the location of the TMS test switches.

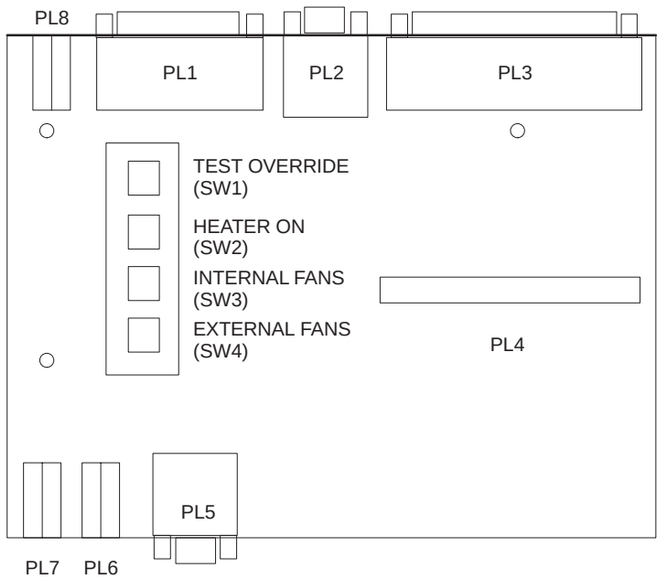

CAUTION	Do not operate the unit in test mode for more than 4 minutes, otherwise damage to the electronic equipment may occur.

Figure 7-4 Layout of alarms interface board and TMS test switches

1. Open the power supply enclosure (right) cabinet door.
2. Press and hold the test override switch and check that the four fans are rotating at minimum speed and the heater LED is off.
3. Press the internal fans switch and check that both recirculation fans increase speed.
4. Release the internal fans switch and check that both recirculation fans return to minimum speed.
5. Press the external fans switch and check that both ambient air fans increase speed.
6. Release the external fans switch and check that both ambient air fans return to minimum speed.
7. Press the heater switch and check that the heater LED is lit.
8. Release the heater and test override switches.
9. Close the cabinet doors and verify (by listening) that the TMS recirculation fans are operating.

NOTE	In step 9 ambient air fans may also run, depending on site conditions.

Testing the battery backup

Overview of battery backup test

Objective

The battery backup test verifies whether or not the battery backup is operating correctly.

Test equipment

The battery backup test does not require any test equipment.

Commands

The battery backup test does not require any software commands.

Battery backup test procedures

The test procedure carried out will depend on battery backup configuration.

NOTE	If the BTS cabinet is operational or otherwise visible to the OMC-R, alarms will be generated. Notify the OMC-R before carrying out these test procedures. The internal or external batteries must be fully charged before carrying out these test procedures. The battery capacity test discharges the internal batteries to –44 V dc. If an external power supply failure occurs immediately after the test, the battery back up duration is reduced to approximately 3 minutes. The internal batteries recharge to approximately 80 % capacity in less than one hour.

Internal battery backup

To test operation of internal battery backup:

1. Operate the CAB front panel **BATTERY TEST** button to initiate internal battery capacity test.
2. Check that the **BATTERY CAPACITY** LEDs flash during the test.
3. Check the **15 mins** battery capacity LED is illuminated at the end of the test.

The test of internal battery backup operation is now complete.

External battery backup (AEH)

To test operation of external battery backup:

1. Switch the main 32 A circuit breaker to off to disconnect the external ac supply.
2. Check that the yellow **I/P HEALTHY** and green **O/P HEALTHY** LEDs on the three TOPSMs are extinguished.
3. Check that the green **RADIO** LED on the CAB remains illuminated.
4. Check that the **RADIO STATUS** LED for each CTU continues to flash green.
5. Verify (by listening) that the TMS recirculation fans are operating.

NOTE	In step 5 ambient air fans may also run, depending on site conditions.

6. Switch the main 32 A circuit breaker to on to reconnect the external ac supply.
7. Check that the yellow **I/P HEALTHY** and green **O/P HEALTHY** LEDs on the three TOPSMs illuminate, and that the indications checked in steps 3 to 5 remain unchanged.

The test of external battery backup operation is now complete.

Sample form 1: Request for connection

XXXXXXXXXX ELECTRIC

REQUEST FOR A CONNECTION OF A

CUSTOMER'S INSTALLATION

The electrical installation at the following address will be ready for connection
on (date) .....

NOTE : At least 4 full working days' notice is required.

Address .....

..... Telephone No. .....

DETAILS OF INSTALLATION

The installation to be connected is :
tick as appropriate

A completely new installation ☐ An alteration ☐ A rewire ☐

TYPE OF EQUIPMENT	**CONNECTED LOAD (kW)**
Cooker	
Water heater	
Storage radiators	
Other *list below*	

METHOD OF EARTHING *tick as appropriate*

PME ☐

Cable Sheath ☐

RCD ☐

Other ☐ Give Details

NO OF PHASES

1 ☐

3 ☐

Other ☐ Give Details

DECLARATION

The electrical installation, summarised above, complies with the current edition of the Regulations for Electrical Installations published by the Institution of Electrical Engineers and is now ready for connection to xxxxxxxxx Electric's supply network.
It is understood that xxxxxxxxxx Electric will carry out tests, required by law, prior to connection, but these tests will NOT confirm that the installation complies with the IEE Wiring Regulations, NOR will its connection imply that it is approved by xxxxxxxxxx Electric in any way.

Electrical Installer's Name .....

Address .....

..... Telephone No. .....

Signed ..... Date .....

PARTICULARS OF THE INSTALLATION

(Delete or complete items as appropriate)

Type of Installation New/alteration/addition/to existing installation

Type of earthing (312–03): (Indicate in the box) TN–C ☐ TN–S ☐ TN–C–S ☐ TT ☐ IT ☐

Earth Electrode Resistance . . . . . ohms

Method of Measurement . . . . . .

Type (542–02–01) and Location . . . . . .

Characteristics of the supply at the origin of the installation (313–01):

Nominal voltage . . . . . volts
Frequency . . . . . Hz . . . . . Number of phases . . . . . .

	ascertained by enquiry	determined by calculation	measured
Prospective short–circuit current . . . . . kA			
Earth fault loop impedance (Z_e) . . . . . ohms			

Maximum demand . . . . . A per phase

Overcurrent protective device – Type BS . . . . . Rating . . . . . A

Main switch or circuit–breaker (460–01–02): Type BS . . . . . Rating . . . . . A No of poles . . . . .

(if an r.c.d., rated residual operating current I . . . . . mA.)

Method of protection against indirect contact:

1. Earthed equipotential bonding and automatic disconnection of supply ☐

or

2. Other ☐ (Describe) . . . . . .

Main equipotential bonding conductors (413–02–01/02, 547–02–01): Size . . . . . mm^2

schedule of Test Results: Continuation . . . . . pages

Details of departures (if any) from the Wiring Regulations (120–04, 120–05) . . . . . .

Comments on existing installation, where applicable (743–01–01): . . . . . .

Sample form 2: Completion and inspection form

FORMS OF COMPLETION AND INSPECTION CERTIFICATE

(as prescribed in the IEE Regulations for Electrical Installations)

DETAILS OF THE INSTALLATION

Client:

Address: (1.) (see Notes overleaf)

DESIGN

I/We being the person(s) responsible (as indicated by my/our signatures below) for the Design of the electrical installation, particulars of which are described on Page 3 of this form CERTIFY that the said work for which I/we have been responsible is to the best of my/our knowledge and belief in accordance with the Regulations for Electrical Installations published by the Institution of Electrical Engineers, 16th Edition, amended to (3.) (date . . . . . .) except for the departures, if any, stated in this Certificate.

The extent of liability of the signatory is limited to the work described above as the subject of this Certificate.

For the DESIGN of the installation:

Name (In block Letters): Position:

for and on behalf of:

Address:

(2.) Signature: (3.) Date

CONSTRUCTION

I / We being the person(s) responsible (as indicated by my/our signatures below) for the Construction of the electrical installation, particulars of which are described on Page 3 of this form CERTIFY that the said work for which I/we have been responsible is to the best of my/our knowledge and belief in accordance with the Regulations for Electrical Installations published by the Institution of Electrical Engineers, 16th Edition, amended to (3.) (date . . . . . .) except for the departures, if any, stated in this Certificate.

The extent of liability of the signatory is limited to the work described above as the subject of this Certificate.

For the CONSTRUCTION of the installation:

Name (In block Letters): Position:

for and on behalf of:

Address:

(2.) Signature: (3.) Date

INSPECTION AND TEST

I / We being the person(s) responsible (as indicated by my / our signatures below) for the Inspection and Test of the electrical installation, particulars of which are described on Page 3 of this form CERTIFY that the said work for which I/we have been responsible is to the best of my/our knowledge and belief in accordance with the Regulations for Electrical Installations published by the Institution of Electrical Engineers, 16th Edition, amended to (3.) (date . . . . . .) except for the departures, if any, stated in this Certificate.

The extent of liability of the signatory is limited to the work described above as the subject of this Certificate.

For the INSPECTION AND TEST of the installation:

Name (In block Letters): Position:

for and on behalf of:

Address:

I RECOMMEND that this installation be further inspected and tested after an interval of not more than . . . . years (5.)

(2.) Signature: (3.) Date

(6) page 1 of . . . . pages

1. This document is intended for the initial certification of a new installation or of an alteration or addition to an existing installation and of an inspection.

2. The signatures appended are those of the persons authorised by the companies executing the work of design, construction and inspection and testing respectively. A signatory authorised to certify more than one category of work shall sign in each of the appropriate places.

3. Dates to be inserted.

4. Where particulars of the installation recorded herein constitute a sufficient schedule for the purpose of Regulation 514–09–01 further drawings / schedules need not be provided. For other installations the additional drawings/schedules listed below apply.

5. Insert here the time interval recommended between periodic inspections. Regard should be paid to relevant National or Local legislation and reference should be made to chapter 13.

6. The page numbers of each sheet should be indicated together with the total number of sheets involved.

(4) Schedule of additional records.

(6) page 2 of . . . . pages

Chapter 8

Decommissioning the equipment

Chapter 8
Decommissioning the equipment i

Introduction to decommissioning the Horizonmacro outdoor cabinet . . . . . Inst. 8–1
Overview . . . . . Inst. 8–1
Prerequisite . . . . . Inst. 8–1
Lifting cabinets . . . . . Inst. 8–1

Decommissioning the Horizonmacro outdoor cabinet . . . . . Inst. 8–2
Introduction . . . . . Inst. 8–2
To decommission using checklist . . . . . Inst. 8–2
Before starting . . . . . Inst. 8–2
Power down of the cabinet . . . . . Inst. 8–2
Procedure . . . . . Inst. 8–3
BTS checklist . . . . . Inst. 8–4

Introduction to decommissioning the Horizon*macro* outdoor cabinet

Overview

This chapter describes how to decommission the Horizon*macro* outdoor cabinet. To decommission equipment not supplied by Motorola, for example E1/T1 links, power supplies and antennas, refer to the vendor's instructions.

WARNING	Hazardous voltages exist inside the Horizon*macro* outdoor cabinet. Use extreme caution when working on a cabinet with power applied. Remove all rings, watches and other jewellery.

Prerequisite

Read all the earlier chapters of this installation section, before attempting to decommission a Horizon*macro* outdoor cabinet.

Lifting cabinets

Horizon*macro* outdoor cabinets are fitted with four lifting points, designed to accommodate M16 swivel head eyebolts, built into the cabinet sides. If swivel head eyebolts are used to lift the cabinet, they must be manufactured to CE conformity, and must have a safe weight load of 400 kg each.

Refer to Safety considerations from **Unpacking and preparing the cabinet** in Chapter 3 of this category before lifting cabinets.

1. Carefully remove the plastic insert from the M16 threaded lifting point.
2. Insert the eyebolt into the thread, ensuring that no cross-threading occurs.

WARNING	Before attempting to insert the eyebolts, visually check each one for damage. If any damage is apparent, DO NOT USE. Do not overtighten the eyebolts; hand tight is sufficient. **Do not tighten eyebolts with a t-bar or spanner.** Screw the eyebolt fully into the lifting point so that no thread is left exposed.

3. Repeat the procedure until all four eyebolts have been correctly fitted.

For continued use of eyebolts, there may be local regulations that govern the use of lifting equipment and stipulate a test and/or examination regime. If the eyebolts are to be used, ensure that all such regulations are met.

Remember to remove the eyebolts and refit the plastic inserts when the lifting operation is complete.

Decommissioning the Horizon*macro* outdoor cabinet

Introduction

Use the following procedure to decommission the Horizon*macro* outdoor cabinet, and use the checklist to check off each action as it is completed. Photocopy the checklist as often as required. Do not write on the original.

To decommission using checklist

The following procedure should be recorded by use of the checklist, to check that each action has been completed. Photocopy the checklist as often as required; do not write on the original manual copy.

Before starting

Before starting to decommission the cabinet, ensure that:

- The main power source is switched off and that no power is connected to the cabinet. If an auxiliary equipment housing is connected to provide battery backup, ensure that the dc power is isolated from the Horizon*macro* outdoor cabinet.
- Suitable packing crates and cartons are available to pack the decommissioned equipment.
- The OMC-R has taken the cabinet out of service.
- The cabinet has been powered down, as described in **Powering down the cabinet** in this section.
- Any unused items have been retrieved from storage elsewhere.

Power down of the cabinet

If the cabinet is not to remain powered up, power down as follows:

1. Press all CBM circuit breaker buttons to the **out** (off) position.
2. Switch each PSM to the OUTPUT DISABLE position.
3. Set the internal and external battery circuit breakers to off.
4. Set all circuit breakers on the PSU dc circuit breaker panel to off.
5. Set the number 2 ac distribution box circuit breakers to off.
6. Switch the four pole MCB and 6 amp RCBO circuit breakers in the number 1 ac distribution box to off.
7. Switch off the external power supply to the cabinet.

This completes the power down procedure for the cabinet.

Procedure

To decommission the cabinet:

1. Check the cabinet and its contents for signs of damage.
2. Use a digital voltmeter to ensure that power is not present in the cabinet.

WARNING	Untidy disconnected cables can create a trip hazard to personnel using the site.

3. Disconnect the cabinet input ac power cable from the power source and the main input terminals. Withdraw the cable through the earthing plate and store it in suitable packaging. Do not remove the cabinet earth lead until all other cables have been disconnected.
4. Disconnect all antenna cables from their connections on the earthing plate, and any transmit and receive RF cables from other cabinets.
5. Disconnect fibre optic cables between master cabinet and any extension cabinets.
6. Disconnect the following cables (if fitted) from their connectors on the top panel of the cabinet and withdraw the cables through the earthing plate:
   - E1/T1 cables.
   - Alarm cables.
   - DC power cables (from auxiliary equipment housing, if fitted).

   Refit the protective covers to all exposed terminals on the top panel.
7. Disconnect the cabinet earth cable and stow disconnected cables so that they do not constitute a hazard to personnel using the site.
8. Unbolt the cabinet from the floor and move it to a location where it can be safely packed into a wooden transit case.
9. Unbolt the alloy template and repack it with the cabinet.

BTS checklist

NAME _____ DATE _____

SIGNATURE _____

SITE NAME _____

EQUIPMENT TYPE _____

NAT ID _____

ACTION	Yes	No	N/A
Outdoor cabinet taken out of service by the OMC-R.			
Packing material (including polythene bag) on site.			
Is cabinet damaged? If yes, detail in comments box.			
Power cable disconnected.			
RF cables disconnected from earthing plate.			
Interface panel cables disconnected.			
DC power cables disconnected (if used).			
Protective covers refitted to top panel connectors.			
Earth cable disconnected from the cabinet.			
Doors and lid closed and locked. Key stored safely.			
Cabinet packed in transit case.			
Cabinet base fixings removed and packed.			
Cabinet template removed and packed.			

COMMENTS