VHF/FM AIRBORNE TRANSCEIVER MODEL TFM-138B

(s/n's 1500 and up with F14 Software)

Installation and Operating Instructions

Til Document No.
97RE221
Rev. A
Issue 1

SEPTEMBER 2002

Technisonic Industries Limited
240 Traders Boulevard, Mississauga, Ontario L4Z 1W7
Tel:(905)890-2113 Fax:(905)890-5338
www.til.ca

CAUTION

This unit contains static sensitive devices. Wear a grounded wrist strap and/or conductive gloves when handling printed circuit boards.

NOTE: ***This equipment has been tested and found to comply with the limits for a Class A digital device, pursuant to Part 15 of the FCC Rules. These limits are designed to provide reasonable protection against harmful interference when the equipment is operated in a commercial environment. This equipment generates, uses, and can radiate radio frequency energy and, if not installed and used in accordance with the instruction manual, may cause harmful interference to radio communications. Operation of this equipment in a residential area is likely to cause harmful interference in which case the user will be required to correct the interference at his own expense.***

Warning:

Changes or modifications not expressly approved by Technisonic Industries could void the user's authority to operate the equipment.

WARRANTY INFORMATION

The Model TFM-138B, VHF/FM Transceiver is under warranty for one year from date of purchase. Failed units caused by defective parts, or workmanship should be returned to:

Technisonic Industries Limited
240 Traders Boulevard
Mississauga,
Ontario L4Z 1W7

Tel: (905) 890-2113 Fax: (905) 890-5338

Summary of DO-160C Environmental Testing for Technisonic Model TFM-138B, VHF Transceiver

Conditions	Section	Description of Conducted Tests
Temperature and Altitude	4.0	Equipment tested to categories B2 and D1.
Vibration	8.0	Equipment is tested without shock mounts to categories B, M and N.
Magnetic Effect	15.0	Equipment is class Z.
Power Input	16.0	Equipment tested to category B.
Voltage Spike	17.0	Equipment tested to category B.
RF Emission	21.0	Equipment tested to category Z.

Installation Approval Note

Presently no TSO standard exists for airborne FM transceivers. To make it easier for installation agencies to provide their customers with an approved installation supported by an effective Airworthiness Approval, Technisonic has secured Supplemental Type Certificate (STC) Approvals (both US and Canadian) on its Airborne FM products for many helicopters currently being delivered in the US and Canada as well as a number of single engine fixed wing aircraft. The above referenced DO-160C test data is also on file and available from Technisonic to support approval requirements in airframes for which Technisonic does not possess an STC.

Approved aircraft types are listed in the attachments to the formal STC documents. These STC's are the exclusive property of Technisonic and require the written authority of Technisonic for their use. To assist Factory Authorized Technisonic Dealers in the certification process, we have placed copies of our Canadian and US STC's on our web site along with a letter of authorization for their use. These documents may be downloaded and used as support for the technical submission to FAA or Transport Canada. Only factory authorized dealers/installers are permitted to download and make use of these documents on behalf of their customers (end users) in support of regulatory agency approval. Please refer to the Technisonic web site www.til.ca for the latest issue of available STC's and letter of authorization for use.

TABLE OF CONTENTS

Paragraph	Title	Page
SECTION 1	**GENERAL DESCRIPTION**	
1.1	Introduction	1-1
1.2	Description	1-1
1.3	Purpose of Equipment	1-1
1.4	Model Variation	1-1
1.5	Technical Summary	1-2
SECTION 2	**OPERATING INSTRUCTIONS**	
2.1	Features	2-1
2.2	Operating Instructions	2-1
2.3	Programming Instructions	2-5
2.4	Scanning Function	2-6
2.5	Priority and Selective Memory Channel Scanning	2-6
2.6	Direct Frequency Entry Mode	2-6
2.7	Receive Frequency Simplex Function	2-7
2.8	Keyboard Lockout Function	2-7
2.9	Variable Frequency Mode Function	2-7
2.10	LED Display Variable Dimming Mode	2-7
2.11	90 Second Transmitter Time Out Feature	2-7
2.12	Quick Guard Programming Feature	2-7
2.13	Programming CTCSS Tones	2-8
2.14	PC Memory/Programming Download Capability	2-9
SECTION 3	**INSTALLATION INSTRUCTIONS**	
3.1	General	3-1
3.2	Equipment Packing Log	3-1
3.3	Transceiver Installation	3-1
3.4	Installation Kit - Contents	3-1
3.5	Antenna Installation	3-1
3.6	Installation - Pin Locations and Connections	3-1
3.7	Wiring Instructions	3-3
3.7.1	Main Power +28VDC	3-3
3.7.2	Main Ground	3-3
3.7.3	PTT (Ground Keying)	3-3
3.7.4	Front Panel Back Lighting	3-5
3.7.5	Audio Outputs (600 and 4 Ohms)	3-5
3.7.6	Audio Output Ground	3-5
3.7.7	Mic Signal Input	3-5
3.7.8	Memory Up/Memory Down	3-5
3.7.9	Data Input	3-5
3.8	Internal Programming and Guard Enable/Disable Jumper	3-5
3.9	Transmitter Power Adjustments	3-7
3.10	Transmitter Microphone Level Adjustment	3-7
3.11	Transmitter Sidetone Level Adjustment	3-7
3.12	Main and Guard Squelch Adjustment	3-9
3.13	Transmitter Deviation Adjustment	3-9
3.14	Guard Receiver Audio Limit Feature	3-9

SECTION 3 **INSTALLATION INSTRUCTIONS - APPENDIX**

Post Installation EMI Test A-1

LIST OF TABLES

Table No.	Title	Page
3-1	15-Pin D Connections	3-3

LIST OF ILLUSTRATIONS

Figure No.	Title	Page
2-1	Operator's Switches and Controls - TFM-138B	2-3
2-2	TFM-138B Transceiver PC Up/Download Cable - Wiring Diagram	2-12
3-1	Outline Drawing for TFM-138B Transceiver	3-2
3-2	Wiring Connections for TFM-138B Transceiver	3-4
3-3	Interal Enable/Disable Jumper and TX High/Low Power Adjust Locations	3-6
3-4	Microphone and Sidetone Level, Main and Guard Squelch Adjustment Access	3-8
3-5	Deviation Adjustment Potentiometer Location	3-10

TFM-138B
SOFTWARE CHANGE NOTE

This document covers operation of the Technisonic TFM-138B, s/n 1500 and onwards which have been delivered from the factory with version F14 software. For TFM-138B's with s/n 1499 or less, TiL Document 95RE177 should be referred to.

This document does not cover the operation of older version TFM-138B's with s/n 1499 or less.

SECTION 1

GENERAL DESCRIPTION

1.1 INTRODUCTION

This publication provides operating and installation information on the TFM-138B (with version F14 software), Transceiver manufactured by Technisonic Industries Limited. The version F14 software is factory installed in TFM-138B's with s/n F1500 and onwards. The unit offers an extended frequency range with selectable channel spacing and is intended for use (in the U.S.) only by government agencies or contractors thereto, who have obtained licensing for operation in the 138-150 MHz portion of the band. If the TFM-138B transceiver is used in CANADA, operation is restricted to the following sub bands: 138-144, 148-148.99, 149.005-150.005 and 150.05-174 MHz.

1.2 DESCRIPTION

The TFM-138B, Transceiver is a frequency agile, fully synthesized airborne transceiver capable of operating in the 138.000 MHz to 174.000 MHz frequency range in 2.5 kHz increments with either 25 kHz or 12.5 kHz channel spacing. The Transceiver can operate without restriction on any split frequency pair in the band and also incorporates a two channel synthesized guard receiver.

The TFM-138B Transceiver provides 120 operator accessible memory positions, each of which is capable of storing a transmit frequency, receive frequency, transmit frequency CTCSS tone or DPL code, receive frequency CTCSS tone or DPL code, an alphanumeric identifier for each channel and in the TFM-138B, wideband (25 kHz) or narrowband (12.5 kHz) channel spacing assignment. Operating frequency and other related data are presented on a 48 character, two line LED matrix display. Data entry and function control are performed via a 12 button keypad. Preset channels may also be scrolled and scanned through keypad function activation. Data may also be entered via a PC computer with the provided software and optional PIB-100 programming interface box or via an older computer and PC Up/download cable, P/N 943165-4.

1.3 PURPOSE OF EQUIPMENT

The TFM-138B, VHF/FM Transceiver is designed to provide secondary airborne communications to facilitate operations which are typically performed in a low altitude environment. The transmitter section of this unit has a minimum of 8 watts and does not exceed 10 watts output power, which may be reduced by a front panel switch to 1 watt, in order to reduce interference to land based systems.

1.4 MODEL VARIATION

There are four variations of the Model TFM-138B Transceiver. All units offer identical features and performance except for the following differences:

TFM-138B, P/N 921012-1, Option B	GREEN display and 28 Volt back lighting.
TFM-138B, P/N 921012-1 (5V), Option B	GREEN display and 5 Volt back lighting.
TFM-138B, P/N 921012-2, Option B	RED display and 28 Volt back ligting.
TFM-138B, P/N 921012-2 (5V), Option B	RED display and 5 Volt back lighting.

Both P/N's 921012-1 and 921012-2 are always provided with 28 Volt back lighting unless a specific request is made for 5 Volt AC operation. Version F14 software is standard in all variations from s/n F1500 onwards.

1.5 TECHNICAL CHARACTERISTICS

Specification	Characteristic
GENERAL	
Model Designation:	TFM-138B
Frequency Range:	138.000 to 174.000 MHz
Tuning Increments:	2.5 kHz
Operating Mode:	F3E simplex or semi-duplex
Channel Spacing:	25 or 12.5 kHz
Physical Dimensions (including heatsink):	Approx. 8.0" X 3.0" X 5.75"
Weight:	Approx. 3.1 Lbs (1.4 Kg)
Mounting:	Panel Mount via Dzus fastners
Operating Temperature Range:	-45EC to +70EC
Power Requirement:	
Voltage:	28.0 Vdc, ± 15%
Current:	Receive - 0.7 A Max. 1 Watt Transmit - 1.3 A Max. 8-10 Watt Transmit - 2.0 A Max.
Frequency Selection:	120 memories programmed with: a) Tx Frequency/Rx Frequency b) Tx/Rx CTCSS tone or DPL code c) 9 character alpha numeric title
Guard Receiver:	2 channels programmed with: a) Tx Frequency/Rx Frequency b) Tx CTCSS tone or DPL code c) 9 character alpha numeric title
CTCSS squelch/encoder:	All CTCSS tones available
DPL digital squelch/encoder:	All standard DPL codes
DTMF encoder:	All standard DTMF tones
Audio Output:	0.5 Watts into 600 ohms
Speaker Output:	2.5 Watts min. into 4 ohms
Back Lighting:	28 Volts (standard) or 5 Volts (specify)
Display Colour:	Green (standard) or Red (specify)

DPL is a trademark of Motorola Corporation

1.5 TECHNICAL CHARACTERISTICS (continued)

MAIN RECEIVER

Sensitivity at 12 dB SINAD	Better than 0.35 µV
Adjacent Channel Selectivity	-70 dB (25 or 12.5 kHz)
Spurious Attenuation	-90 dB
Third Order Intermodulation	-70 dB
Image Attenuation	-80 dB
FM Acceptance	± 6 kHz
Hum and Noise	Better than 50 dB
Audio Distortion	less than 5%
Antenna Conducted Emission	less than -70 dBm

GUARD RECEIVER

All specifications identical to main receiver

TRANSMITTER

RF Power Output	1 watt or 10 watts
Output Impedance	50 ohms
Maximum Deviation (In narrowband mode)	±5 kHz (25 kHz mode) ±2.5 kHz(12.5kHz mode)
Spurious Attenuation	-90 dB below carrier level
Frequency Stability	± 2.5 ppm
Microphone Circuit	Carbon or equivalent
Sidetone Output	0.5W (max) into 600Ω
Harmonic Attenuation	-65 dB below carrier level
FM Hum And Noise	-40 dB
Audio Input	50 mV at 2.5 kHz into 200 Ω input circuit for ±3.5kHz deviation, adjst.
Audio Distortion	Less than 5%

SECTION 2

OPERATING INSTRUCTIONS

2.1 FEATURES

The equipment has several important operating features which provide maximum flexibility, performance and versatility. These features include:

1. 120 memory positions which can each be programmed with a transmit and receive frequency with 25 or 12.5 kHz channel spacing, Tx/Rx CTCSS tones or DPL codes and a 9-character alphanumeric title.
2. 2 guard channels which can each be programmed with a Rx frequency with 25 or 12.5 kHz channel spacing, CTCSS Tx tone or DPL code and a 9-character alphanumeric title.
3. Scanning of preprogrammed memories with selective memory scanning, in 5 scan lists.
4. Priority scan of memory channel 1, if desired.
5. Direct frequency entry mode.
6. Receive frequency simplex function.
7. Switchable RF output power between 1 watt and 8-10 watts.
8. Lockout of keyboard to prevent inadvertent entries.
9. Variable frequency mode to manually scan up and down in 2.5 kHz steps.
10. LED display variable dimming mode.
11. Selectable 90 second Tx time out feature.
12. Quick download of any of the 120 memory positions to the guard memories.
13. PC Memory Upload and/or download capability.

In addition to the above features the following list summarizes the NEW operating features and improvements incorporated in the Version F14 software:

1. **Configuration Menu** - Pressing **ENTER**, **RCL** and **FUNC** together with all 3 front panel switches in the “up” position while turning the radio on will put it into configuration mode. The programming features that can be configured by this menu include:

   a) **DPL** - Can be turned on or off with th MUP and MDN (4 and 7) keys. This only removes the DPL entry step from the programming sequence and does not stop memories that already have DPL codes from working. This also applies to the rest of the on/off configurable items.
   b) **Scan** - Can be disabled. Selecting FUNC and SCAN will do nothing if Scan is off. The scan list indicator (+) will still display if was previously programmed.
   c) **Rx CTCSS** - Can be turned on or off from the programming sequence. This affects only the CTCSS tones for receive.
   d) **FUNC 7** - Can be turned on or off. When off, the main memory channel can not be dumped into one of the guard channels using function 7.
   e) **LAST MEM** - If set to on, the last memory channel on the display will be what comes up when the radio is turned on. If set to off, the last memory that changes were made to will be what comes up when the unit is switched on.

2.1 (NEW) FEATURES - F14 Software (continued)

2. **Fast Download** - PC download is now much faster.

3. **PC Up/Download** - It is recommended to purchase the PIB-100 programming box complete with Windows based programming software. However, as an alternative, it is possible to use the older DOS software supplied with the radio if you have an older 486 or early Pentium PC running DOS to program the radio. See PC download instructions for more details.

4. **Fast Scan** - Scanning speed has increased. The delay between channels is now dependent upon the amount of frequency change from the last channel to the next instead of always assuming the worst case (138 to 174MHz). Four more scan lists have been incorporated so that the pilot does not have to reprogram scanning when flying into a new area or job site.

5. **Quick Scan/Lock** - A memory channel can quickly be put in or taken out of the scan list by pressing

   FUNC and then ENTER. The scan indicator is toggled on and off. The new condition is saved in the eeprom.

6. **New Characters** - A couple of graphics (* , ! and ≠) have replaced those unknown shapes and designs that used to be at the end of the character list.

7. **Rx CTCSS Updating** - While programming the receive CTCSS tone the receiver is updated immediately. This can help you find out what tone is being used on a repeater or other radios by simply scrolling through the tones until the squelch opens.

8. **Guard Jumper** - Programming of the guard channels can be totally disabled by removing J15. (used to be the 138/150 jumper) This way, the radio has to be disassembled in order to re-program either of the guard frequencies. This may be required on US Forest Service contracts.

9. **Variable Frequency mode** - It is now possible to scroll to the frequency of 174.0000 MHz as long as the digits after the decimal are zeros.

10. **Easier Programming** - Several changes have been made to the programming mode easier or quicker to use. These include:

    a) When entering frequencies, you do not have to type in the entire frequency to the last digit. Now you can type in what you need and hit ENTER. This is also true for the direct entry mode.
    b) If you change the receive frequency, the transmit frequency will change to the same thing. This makes entering a simplex channel quicker.
    c) When entering the alphanumerics, you can now backspace with the 1 key to correct mistakes.
    d) You do not have to go through the entire programming sequence anymore. At any time you can press the FUNC key and it will save all changes that have been made and return to normal operating mode. This is also true for the tone programming mode and the direct entry mode.

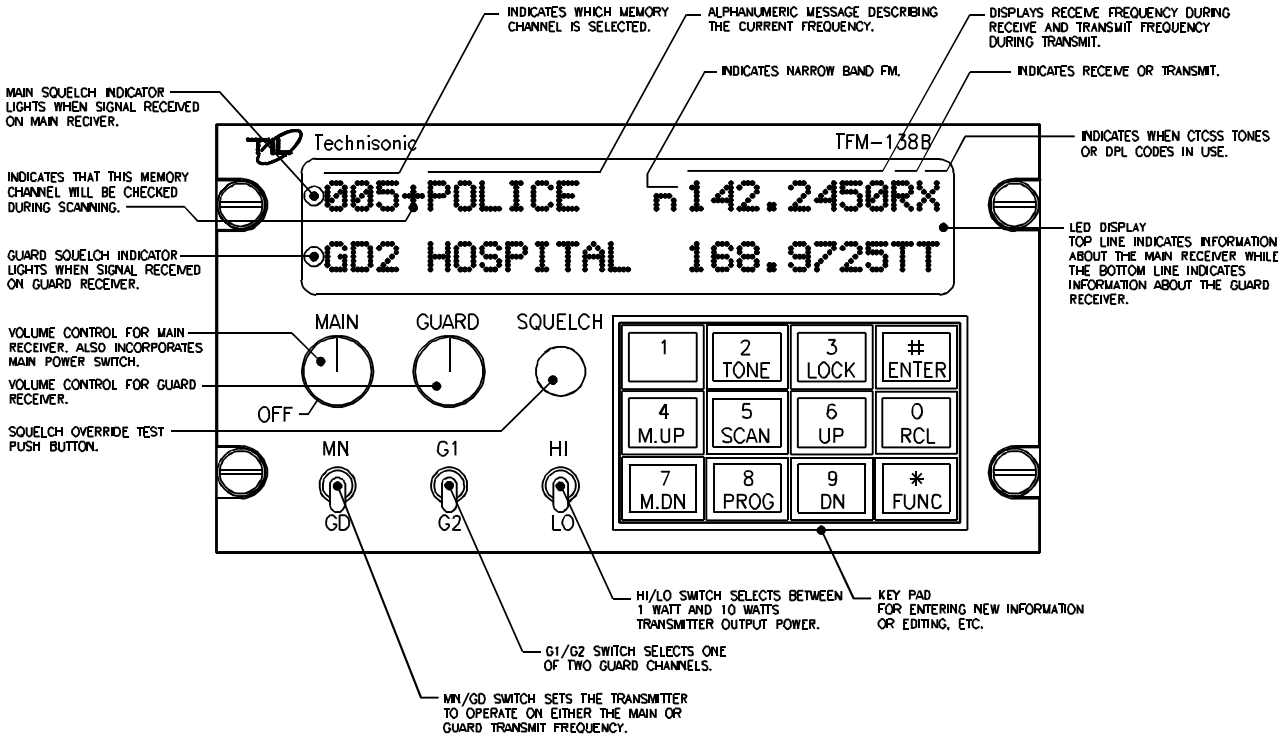

FIGURE 2-1 Operator's Switches and Controls - TFM-138B

2.2 OPERATING INSTRUCTIONS (See Figure 2-1)

1. Switch power on by turning the main volume clockwise. Depending how the radio is configured, either the last programmed or last displayed frequency will appear on the screen. The transceiver is now in normal operating mode.

2. Adjust the audio level by adjusting the main and guard volume knobs.

3. Pressing the squelch defeat button will open both receivers to confirm they work.

4. Read the display. The top line will indicate the memory selected followed by a "+" if the memory position is included in a scan list, an alphanumeric message, and the frequency of the main receiver. A small "n" before the frequency indicates 12.5 kHz narrowband channel spacing is in effect on this memory position. In the receive mode, the frequency is followed by an "RT" if a RX CTCSS tone or RX DPL code is programmed, or an "RX" if no Receive tone/code is programmed. Similarly, in the transmit mode either a "TT" or "TX" is shown after the frequency. The bottom line indicates similar information about the guard receiver.

5. Only TX CTCSS tones or TX DPL codes may be programmed for the guard receiver. At the beginning of each line, an LED indicates open squelch.

6. Set the MN/GD switch to main or guard transmit frequency.

7. Set the G1/G2 switch to the desired guard channel.

8. Set the HI/LO switch to the desired RF output power.

9. Select the desired memory by using the M.UP and M.DN buttons, or the RCL button and a three digit number followed by ENTER.

10. To transmit DTMF tones, use the keyboard keys while holding the PTT button on the microphone. The keyboard returns to its normal function when the PTT is released.

The display shows the status of both receivers and the transmitter. The light at the left of the top and bottom line indicates which receiver is receiving. The display also indicates the memory channel in use and the guard channel in use. A "TX" (no TX tone/codes programmed) or "TT"(either TX tone or code programmed) on the right side of the display indicates whether the guard or main channel is active when transmitting. The transmit frequency is also shown. In the receive mode the display shows “RX” beside the receive frequency if no RX tone or DPL code is programmed and “RT” if a CTCSS tone or DPL code is programmed.

When the transceiver is in either of the operating frequency or CTCSS tone/DPL code programming modes and you must respond to a call, click the microphone PTT once (the radio will not transmit during this click). This will cause the transceiver to revert back to the normal operating mode and communications with the caller can proceed in the usual fashion.

2.3 PROGRAMMING INSTRUCTIONS

To program one of the 120 memory channels in the TFM-138B:

1. Press the **FUNC** key. The display will show the function prompt.

2. Press the **PROG** key. The display will show the current receive frequency with a flashing curser on the second digit (The first digit is always a one <1>).

3. Type in the desired receive frequency. If you type in a frequency which is not a 2.5 kHz step, the nearest valid frequency will be automatically selected.

4. The curser will return to the second digit. You can now retype the frequency if you made an error or press **ENTER** to continue.

5. The transmit frequency will be displayed with the curser on the second digit. Follow the same method as in step 3 and 4.

6. The channel spacing increment of either 25.0 or 12.5 kHz is now displayed. Use the **M.UP** and **M.DN** keys to select the desired channel spacing for the memory position, then press **ENTER**.

7. The alpha-numeric title is now displayed. Use the **M.UP** and **M.DN** keys to scroll through the alphabet, numbers and symbols. When the desired character is displayed, press **ENTER** to advance to the next character. Press “1" to backspace.

8. Keep repeating step 7 until the last space is set. The display will show SCAN or LOCKOUT to enable this memory position as part of the scan list or to lock it out of the scan list. Use the **1,2,3,4,5** keys to add the channel to the corresponding scan list or press **M.DN** to clear the channel from all scan lists. (for details see paragraph 2.4). Once the desired condition has been selected, press **ENTER**. The TFM-138B's display will later show a "+" beside the memory channel number if scan is enabled.

9. The display will now show the current memory number. Type in the 3-digit number of the memory you want to save to (if different from displayed one) and press **ENTER**.

10. You now have the option to program the guard frequencies by pressing **FUNC** or press **ENTER** to return to normal operating mode.

11. If you pressed **FUNC** to program the guards, guard"1" transmit frequency will be displayed with the flashing curser on the second digit. Enter the frequencies for guard"1" receive/transmit and guard"2" receive/transmit as in step 3 and 4.

12. The alphanumeric labels for guard"1" and guard"2" are entered the same as in step 7 and 8. When the last character is entered, the radio returns to normal operating mode. If the guard is be be programmed for 12.5 kHz narrowband operation, use the QUICK GUARD PROGRAMMING FEATURE described in paragraph 2.12. A memory position must be programmed to the 12.5 kHz mode then the contents can be quickly downloaded to GD1 or GD2 memory positions.

Programming of memory is disabled when the internal entry disable jumper is set. Alternatively any transceiver can be programmed by an IBM PC or compatible computer. See section 2.14 **PC Memory/Programming Download Capability.**

2.4 PRIORITY SCANNING, SELECTIVE MEMORY CHANNEL SCANNING AND SCAN LISTS

Instead of breaking up the 120 channels into blocks for scanning, the TFM-138B (with F14 software) has 5 scan lists. Any of the 120 channels can be assigned to any one of more of these 5 scan lists. This means the channels do not have to be repeated for them to be in more than one block and that you are not limited to the number of channels that you can scan at once, since all 120 channels can be put into any scan list.

The priority memory channel is always memory position number 1. The priority memory channel is scanned every other step (ie. 121314151...) to ensure that no incoming messages are missed. The priority channel can be locked out, which will result in the normal scanning of the other memory positions.

Selective memory scanning allows the user to select which of the 120 memory channels are to be scanned or locked out when the scan function is invoked. To use this feature, follow the PROGRAMMING INSTRUCTIONS found in paragraph 2.3. Once the screen displays **SCAN** or **LOCKOUT**, use the **1,2,3,4** or **5** key to add the channel to the corresponding scan list or lists. The **M.DN** key acts as a clear button removing the channel from all scan lists and displaying **LOCKOUT**. Press **ENTER** when you are happy with your selections. In normal operating mode the display will later show a "+" beside the memory channel number if it has been included in any of the 5 scan lists.

2.5 SCANNING FUNCTION (5 second talkback delay)

1. To start scanning of the memory channels, press **FUNC** then **SCAN** and then the number (1,2,3,4,5) of the desired scan list.

The radio will scan through all the preset memory positions in the selected scan list (see above paragraph for priority and selective scan features) and will lock on to the first active channel in the scan sequence. It will remain on the channel until it becomes inactive. Scanning will resume again after five seconds of inactivity. To exit the scan mode, press the **SCAN** key. This will cause the radio to revert back to the normal operating mode.

Therefore if while scanning, you hear a call for you:

1. Respond to the call within 5 seconds. When scanning is interrupted by an incoming signal, the channel will remain open for five seconds before resuming scanning.
2. During communications the five second timer is reset from the last Rx or Tx signal experienced.

The radio resumes scanning once the Rx or Tx activity has ceased for more than five seconds. The **SCAN** key must be pressed to exit the scan mode.

2.6 DIRECT FREQUENCY ENTRY MODE

This mode is designed to facilitate quick frequency selection during emergency and other operational conditions requiring direct operating frequency selection. This operating mode is disabled along with the programming mode when the internal disable jumper is set.

When the transceiver is in the normal operating mode, press **FUNC** and the desired operating frequency ie/ 153.275. Please note in the above operation, after **FUNC** and "**1**" are entered, the LED display will show memory channel "000" and then the remaining digits in the desired frequency are shown as they are entered. No alphanumeric message can be entered in this mode. Operation on the new frequency occurs in both transmit and receive (simplex only) modes. If RX or TX CTCSS tones/DPL codes are required they must be programmed in.

2.7 RECEIVE FREQUENCY SIMPLEX FUNCTION

The receive frequency simplex function allows you to quickly change the transmit frequency, when operating on a split pair (repeater/semi-duplex mode), to the receive frequency to allow direct communications. ie/ If you are transmitting on 152.000 MHz and receiving 152.555 MHz, press **FUNC** then **UP** to transmit on 152.555 MHz. To return to the split pair condition, you must recall the memory channel again. This is quickly done by pressing **M.UP** for one step up, then back down one step with the **M.DN** key.

2.8 KEYBOARD LOCKOUT FUNCTION

The keyboard can be locked out so that accidental pressing of keys does not change frequency, etc., unknowingly to the operator. To lock the keyboard, press **FUNC** then **LOCK**. This will disable all keyboard functions (except keyboard unlock) in the receive mode. The DTMF function during transmit will not be affected. To unlock the keyboard, press and hold the **LOCK** key for two seconds until the display indicates "UNLOCK".

2.9 VARIABLE FREQUENCY MODE FUNCTION

To enter variable frequency mode, press **RCL**, **0**,**0**,**0**, then **ENTER**. The memory channel that you were just in will still be valid but now you can manually adjust the frequency with the **M.UP**, **M.DN**, **UP** and **DN** keys. The **UP** and **DN** keys will make the frequency count up or down in steps of 2.5 kHz. The **M.UP** and **M.DN** keys will make the frequency count up or down in steps of 1 MHz. You can not change the label. The frequency in this mode can not be stored in memory. To exit this mode, recall one of the 120 memory channels (ie. **RCL**, **0**,**0**,**1**). Variable frequency mode is disabled when the internal entry disable jumper is set.

2.10 LED DISPLAY VARIABLE DIMMING MODE

1. With the transceiver in normal operating mode press the **UP** or **DN** keys to increase or decrease the intensity of the LED display.
2. Once maximum intensity of the display is acheived, the **UP** key no longer functions. Conversely once minimum intensity is reached, the **DN** key ceases to function.

2.11 90 SECOND TRANSMITTER TIME OUT FEATURE

A selectable 90 second transmitter time out feature is provided to prevent accidental continuous transmission in the event of a faulty PTT switch. With this feature enabled the transceiver will stop transmitting after the PTT is engaged continuously for 90 seconds. The timer is reset by releasing then re-engaging the PTT switch.

Press the **FUNC** then the **M.UP** key. Use the **M.UP** and **M.DN** keys to select 90 SEC, which enables the feature, or NONE which disables it.

2.12 QUICK GUARD PROGRAMMING FEATURE

A quick download of any of the 120 memory positions to either of the guard memory positions can be accomplished. Select the memory position whose contents you desire to download to a guard memory. Select either GD1 or GD2 memory channel as desired. Press **FUNC** then **7**. The guard memory channel will now contain all the same information as the selected memory position. This feature is disabled when guard jumper (J15, pins 1&2) on the MCU board is removed.

2.13 PROGRAMMING CTCSS TONES/DPL CODES

CTCSS tones (PL tones) or Digital DPL codes can be assigned to each memory channel. The guard receiver squelch will operate only on carrier detection, but guard 1 and 2 transmit tones or codes can be programmed. To program a tone/code to a memory channel:

1. Use the **M.UP** and **M.DN** keys to select the memory channel that you want to assign a CTCSS tone or DPL code.

2. Press the **FUNC** key then the **TONE** key. The display will show "RX TONE:" and the current tone number, as well as the tone frequency in Hz.

3. Use the **M.UP** and **M.DN** keys to select the tone number you require. The following is a list of the available CTCSS tones:

Number	Tone	Number	Tone	Number	Tone
01	67.0	26	162.2	51	177.3*
02	71.9	27	167.9	52	183.5*
03	74.4	28	173.8	53	189.9*
04	77.0	29	179.9	54	196.6*
05	79.7	30	186.2	55	199.5*
06	82.5	31	192.8	56	206.5*
07	85.4	32	203.5	57	210.7*
08	88.5	33	33.0*	58	218.1*
09	91.5	34	35.4*	59	225.7*
10	94.8	35	36.6*	60	229.1*
11	97.4	36	37.9*	61	233.6*
12	100.0	37	39.6*	62	241.8*
13	103.5	38	44.4*	63	250.3*
14	107.2	39	47.5*	64	No Tone
15	110.9	40	49.2*	(carrier squelch only)	
16	114.8	41	51.2*		
17	118.8	42	53.0*		
18	123.0	43	54.9*		
19	127.3	44	56.8*		
20	131.8	45	58.8*		
21	136.5	46	63.0*		
22	141.3	47	69.4*		
23	146.2	48	159.8*		
24	151.4	49	165.5*		
25	156.7	50	171.3*		

(The tones marked with * are nonstandard tones).

4. Press ENTER. "TX TONE" appears on the display. Repeat step 3.

5. Press ENTER. "G1 TONE" appears on the display. Repeat step 3.

6. Press ENTER. "G2 TONE" appears on the display. Repeat step 3 and press ENTER.

7. The display will now show "RX DPL:" and the current 3-digit DPL code. If no DPL code is required "000" should be entered. Please note that if a DPL code is to be programmed a CTCSS tone should not be enabled.

8. Use the keypad to enter the required octal 3-digit DPL (Digital Coded Squelch or DCS) code. A list of all usable and unique octal 3-digit DPL/DCS codes follows:

017*	051	116	156	243	266*	346	431	466	612	721
023	053*	122*	162	244	271	351	432	503	624	731
025	054	125	165	245	274*	356*	445	506	627	732
026	065	131	172	246*	306	364	446*	516	631	734
031	071	132	174	251	311	365	452*	523*	632	743
032	072	134	205	252*	315	371	454*	526*	654	754
036*	073	143	212*	255*	325*	411	455*	532	662	
043	074	145*	223	261	331	412	462*	546	664	
047	114	152	225*	263	332*	413	464	565	703	
050*	115	155	226	265	343	423	465	606	712	

* indicates GE Digital Coded Squelch (DCS) Code

9. Press ENTER. "TX DPL" appears on the display. Repeat step 8.

10. Press ENTER. "G1 DPL" appears on the display. Repeat step 8.

11. Press ENTER. "G2 DPL" appears on the display. Repeat step 8 and press ENTER.

2.14 PC MEMORY PROGRAMMING UP/DOWNLOAD CAPABILITY

The Technisonic Data Programmer (Multi-TDP) Windows based software is supplied on a CD with the TFM-138B transceiver or is available for download from our web site www.til.ca . This software will allow anyone with a standard personal computer (PC) and the PIB-100 programming box to send or retrieve data from a connected TFM-138B transceiver for editing, sorting and sharing with other Technisonic transceivers.

The Multi-TDP programmers are 32 bit Windows applications that will work under Windows 95, Windows 98, Windows NT 4.0 and Windows 2000. Documentation for each of the respective Programmers is available from the pull down "Help" menu at the top of the programmer display. To use the Windows based program with the TFM-138B, the PIB-100 programming interface box, P/N 001108-1, incudes all required cables and must be purchased from Technisonic or other re-seller.

The CD supplied with the transceiver also contains a DOS based download program that can be used with the TFM-138B and no interface box. However changes in operating systems and PC hardware that have occurred since the release of our DOS compatible software, prevent it from working with most modern computers. Computers with 486 processors or some early Pentium type processors of 200 MHz or less running MS DOS seem to work the best. Please check the “Programmer downloads” link on our web site www.til.ca for further information regarding PC programming information for users of single band transceivers like the TFM-138B.

The user instructions for the Windows based Multi-TDP software and then the DOS based software follow below:

2.14.1 Windows Program Requirements:

1. PC compatible computer running Windows 95/98/NT/2000/ME. CD ROM drive and an available serial port.

2. Bench power supply of 28 volts DC.

3. PIB-100 Programming Interface Box (p/n 001108-1) - use cables that are provided with the PIB-100 programming interface box. Do not use cable p/n 943165-4 which is shown in Figure 2-2 and is for use with the DOS program only.

2.14.2 Windows Program Installation:

1. Insert the CD into the drive.

2. Open the CD with windows explorer.

3. Open the **MultiTDP** directory and double click the **MultiTDP_Install.exe** file.

4. Follow on screen instructions.

2.14.3 Connections:

1. Follow the connection instructions supplied with the PIB-100.

2. Do not turn on the 28 volt power supply until all connections have been made.

2.14.4 Running the Windows Program:

1. On the computer, click the **Start** menu button.

2. Select **Programs** from the **Start** menu.

1. Select **Technisonic** from the **Programs** menu.

2. Select **MultiTDP**.

3. The program will start. The MultiTDP program is used for almost all of Technisonic's transceivers, therefore it has to be set up specifically for your TFM-138B.

4. Pull down the **File** menu and click **Select Radio**.

5. Click the **TFM-30/138/138B/403** line.

6. The display will configure itself for the PIB-100. Click the dot beneath **TFM-138B**.

7. Pull down the **Com Port** menu and select the com port that you have connected the PIB-100.

8. The software is now ready to use. To get a full instruction manual, pull down the **Help** menu and select **Documentation in PDF format**.

2.14.5 Helpful Hints:

When uploading or downloading, a message box will appear asking you to press **FUNC** and then **7** on the radio. Press these keys before clicking the OK button in the message box.

2.14.6 DOS Program Requirements:

1. PC compatible computer with:
   - 200 MHz or less
   - 486 or early Pentium one processor
   - Printer port (LPT1)
   - CD drive - If not, you can copy the software on another computer to a floppy disk.
   - Colour monitor is preferred as some of the text is colour coded.

2. Bench power supply of 28 volts DC.

3. PC Download cable (p/n 943165-4) see figure 2-2.

2.14.7 DOS Program Installation:

1. Insert the CD into the drive.

2. Create a directory on your hard drive called \TIL.

3. Copy everything from the \PCDLB2 directory on the CD to the \TIL directory on the hard drive.

2.14.8 Connections:

1. Connect the PC download cable (p/n 943165-4) to the radio.

2. Connect the other end of the cable to the printer port on the computer

3. Connect the red and black leads to the power supply.

2.14.9 Running the DOS Program:

1. Turn on the 28 volt power supply.

2. Turn on the radio. The channels on the radio may start scrolling - this is normal.

3. Change to the \TIL directory and type PCDLB2 and enter. The radio should stop scrolling. Do not use older DOS software (\PCDLB) for TFM-138B's that have F12 firmware (s/n 1499 and less). It is not compatible with DOS download software for TFM-138B's with F14 firmware. Your frequency information will become corrupted as it is downloaded to a TFM-138B with F14 firmware.

4. Follow the menus to edit channels, print channel list, up or download as desired.

5. The data file is continuously updated as each change is made, so you don't have to save the file at any time. To have multiple data files, you will have to copy the data file to another name and then copy it back when needed. There always has to be a data file called "DATA12" or the program will not work.

2.14.10 Helpful Hints:

* Be sure to never plug in the radio while the power supply is on or damage may occur to your printer port.

C You can only use LPT1 as the printer port. Make sure it is enabled in the BIOS.

C The program works best on older, slower computers but has worked on some new PCs running DOS. A good way to try this out is to make a DOS bootable floppy with the software on it running the software from the A: drive.

TFM-138B Upload/Download Programming Cable For DOS Program
P/N 943165-4 - Wiring Diagram

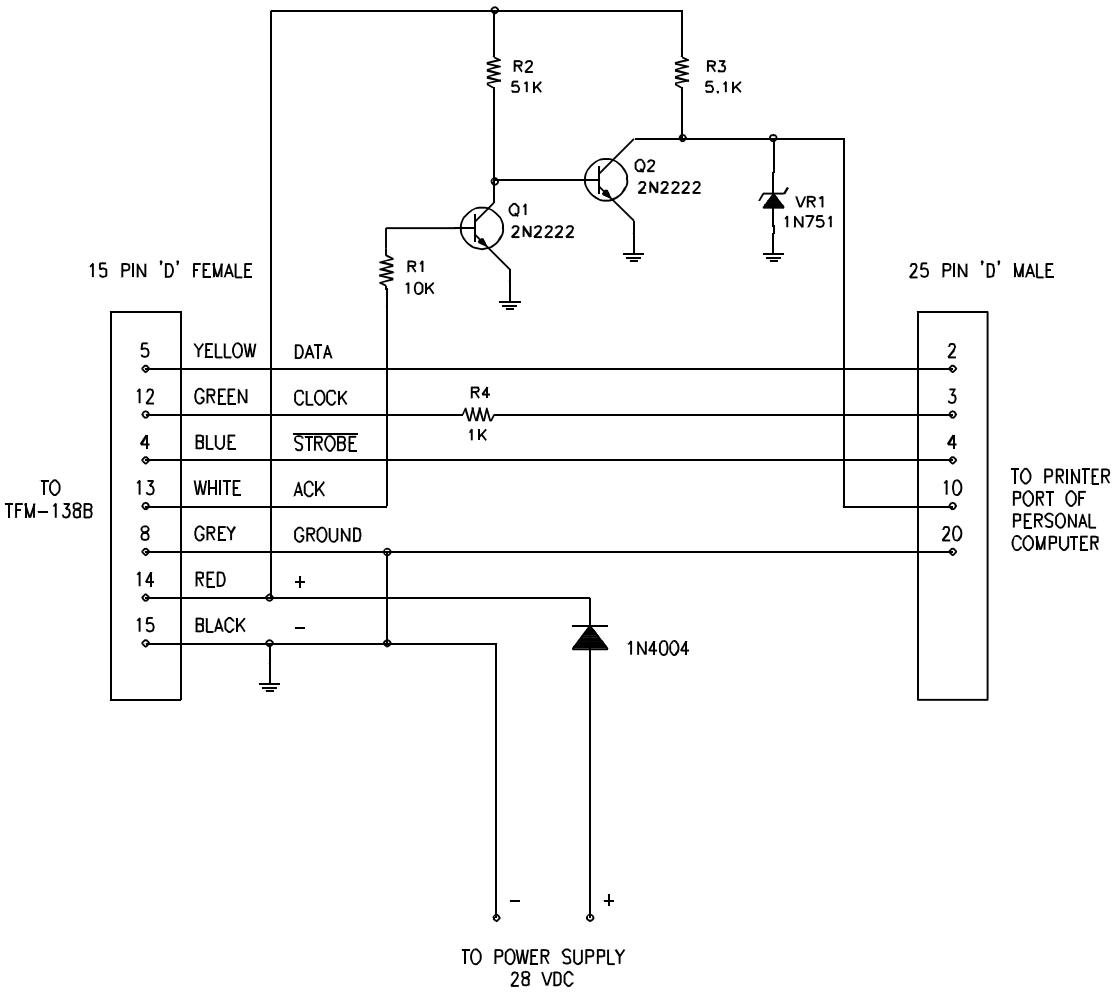

FIGURE 2-2 TFM-138B Transceiver PC Download Cable - wiring diagram (for DOS program only)

SECTION 3

INSTALLATION INSTRUCTIONS

3.1 GENERAL

This section contains information and instructions for the correct installation of the TFM-138B, VHF/FM Transceiver.

Make certain that the correct frequencies are preprogrammed in accordance with the equipment user's valid FCC operator's license, prior to installation.

3.2 EQUIPMENT PACKING LOG

Unpack the equipment and check for any damage that may have occurred during transit. Save the original shipping container for returns due to damage or warranty claims. Check that each item on the packing slip has been shipped in the container. Verify that the equipment display and backlighting configuration are the same as those ordered.

3.3 TRANSCEIVER INSTALLATION

The TFM-138B Transceiver is designed to be Dzus mounted and should be installed in conjunction with a IN-150 installation kit. See Figure 3-1 for an outline drawing of the unit with dimensions to facilitate the installation.

3.4 INSTALLATION KIT - CONTENTS

The IN-150 installation kit consists of:

1. One 15 pin Cannon D connector (female) complete with crimp pins and hood.

2. One BNC antenna mating RF connector (male) and hood.

3.5 ANTENNA INSTALLATION

Antenna, P/N ATM-150 may be obtained from Technisonic Industries Limited or a suitable equilvalent may be utilized with the TFM-138B transceiver. The antenna should be mounted on the bottom of the aircraft whenever possible. Consult with instructions provided with the antenna. Connect RF cable from antenna to the back of the TFM-138B unit by utilizing the BNC mating connector provided in the installation kit.

3.6 INSTALLATION - PIN LOCATIONS AND CONNECTIONS

The pin numbers and locations for the 15 pin Cannon D located on the rear of the TFM-138B transceiver are shown below. Pin connections are in provided in TABLE 3-1.

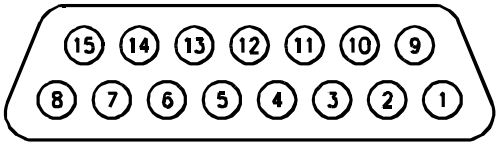

Transceiver mounted view of 15 pin connector

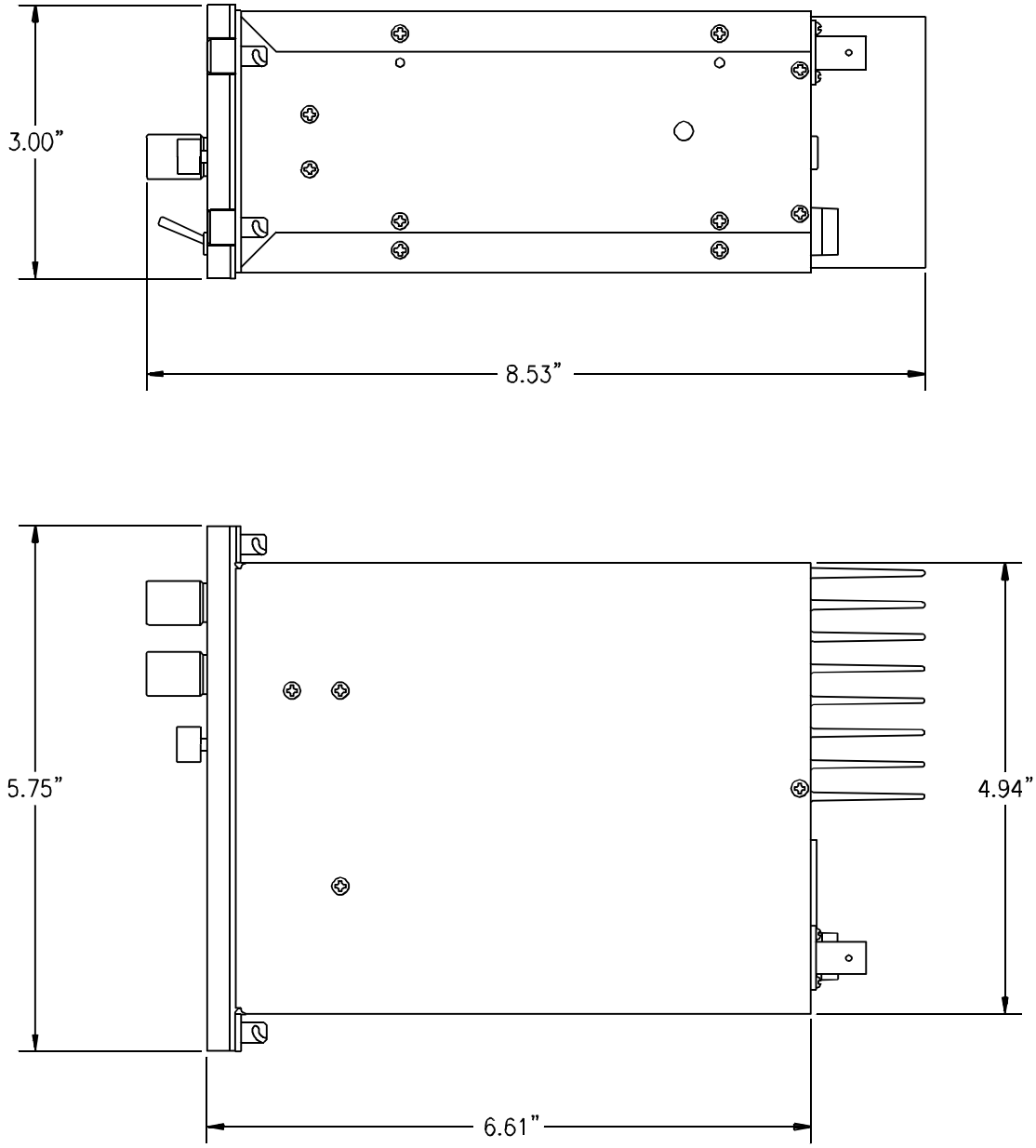

FIGURE 3-1 Outline Drawing for Model TFM-138B Transceiver

3.6 INSTALLATION - PIN LOCATIONS AND CONNECTIONS (continued)

TFM-138B Transceiver 15-Pin D Connections	
Pin #	**Description**
1	600 Ohm Output
2	Data Output
3	Panel Lighting (28VDC or 5VAC)
4	Memory UP/PC Download Input
5	Memory Down/PC Download Input
6	Mic Signal Input
7	Main Power +28VDC
8	Main Ground
9	4 ohm Speaker Output
10	4 ohm/600 ohm Output Ground
11	Data Input
12	PC Download Input
13	PTT (Ground Keying)
14	Main Power +28VDC
15	Main Ground

TABLE 3-1

3.7 WIRING INSTRUCTIONS

Figure 3-2 shows all required connections and recommended wire sizes for the TFM-138B Transceiver.

3.7.1 Main Power +28VDC

The main power +28VDC (±15%) is connected to pins 7 and 14 of the transceiver. Both pins should be connected.

3.7.2 Main Ground

Ground connections for the transceiver are made on pins 8 and 15. Both pins should be connected.

3.7.3 PTT (Ground Keying)

The PTT line is connected to pin 13 and should be floating when the transceiver is in receive mode, and grounded during transmit mode.

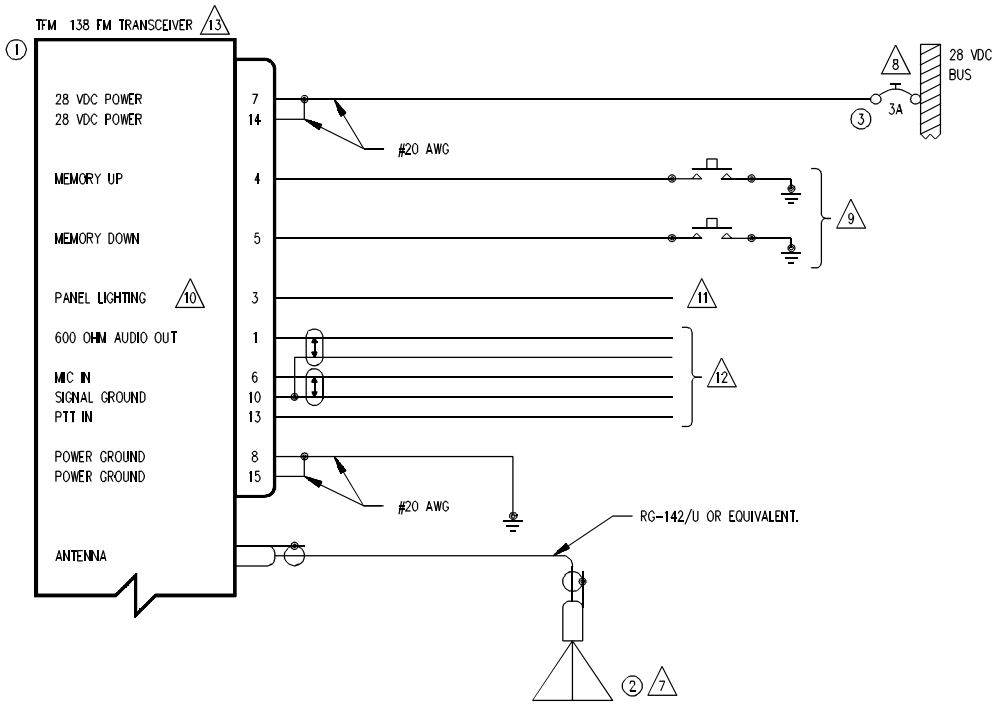

QTY	ITEM	PART NUMBER	DESCRIPTION	SPEC	MATERIAL
1	1	TFM-138, 138A, 138B	VHF/FM COMMUNICATIONS TRANSCEIVER.	TECHNISONIC INDUSTRIES LIMITED	
1	2	AT-150	ANTENNA	TECHNISONIC INDUSTRIES LIMITED	
1	3	7274-11-3	CIRCUIT BREAKER, 3 AMPS	KLIXON	

NOTES:

1) ALL WIRE IAW MIL-W-22759 UNLESS OTHERWISE SPECIFIED.
2) ALL CABLE IAW MIL-C-27500 UNLESS OTHERWISE SPECIFIED.
3) COAXIAL CABLE IAW MIL-C-17 UNLESS OTHERWISE SPECIFIED. DO NOT USE COAX WITH PVC INSULATION.
4) FABRICATION & INSTALLATION OF WIRING HARNESS IAW AC 43.13-1A CHAPTER 11, SECTION 3, PARA 445 TO 462 AND SECTION 7.
5) GROUNDING AND BONDING IAW AC 43.13-1A CHAPTER 11, SECTION 3, PARA 452.
6) ALL SINGLE WIRE TO BE #22 AWG MINIMUM AND ALL SHIELDED WIRE TO BE #24 AWG MINIMUM, UNLESS OTHERWISE SPECIFIED.

7 INSTALLATION OF ANTENNA IAW AC 43.13-1A CHAPTER 2, SECTION 3, CHAPTERS 5 & 6, AND AC 43.13-2A CHAPTER 3. IF POSSIBLE, THE ANTENNA SHOULD BE LOCATED A MINIMUM OF 12 FT FROM AIRCRAFT NAVIGATION RECEIVER ANTENNAS AND A MINIMUM OF 4 FEET FROM AIRCRAFT COMMUNICATIONS AND ELT ANTENNAS. BE CAREFUL NOT TO CHOSE SEPARATIONS THAT CLOSELY APROXIMATE 1/4 OR 1/2 OR WHOLE NUMBER MULTIPLES OF THE NAVIGATION OR COMMUNICATIONS SYSTEM WAVELENGTH.

8 AN EQUIVALENT CIRCUIT BREAKER OR FUSE MAY BE USED.

9 THE MEMORY UP/DOWN PUSH BUTTONS ARE OPTIONAL.

10 THE TFM 138(A)(B) IS AVAILABLE WITH 28V OR 5V PANEL LIGHTING. CHECK THE CONFIGURATION CONTROL LABEL FOR THE CORRECT VOLTAGE.

11 CONNECT TO THE APPROPRIATE AIRCRAFT DIMMING BUSS.

12 CONNECT TO THE AIRCRAFT AUDIO SYSTEM OR STAND-ALONE HEADSET JACKS.

13 INSTALLATION OF TRANSCEIVER IAW AC 43.13-1A CHAPTER 2, SECTION 3 AND AC 43.13-2A, CHAPTER 2. PR 3 1/2 DZUS RAIL OR EQUIVALENT MAY BE USED.

14) TEST THE SYSTEM IN ACCORDANCE WITH THE POST-INSTALLATION TEST PROCEDURE IN THE INSTALLATION AND OPERATING INSTRUCTIONS MANUAL.

15) REFER TO THE AIRCRAFT STRUCTURAL REPAIR MANUAL AND THE MAINTENANCE MANUAL FOR INSTRUCTIONS AND INFORMATION PERTINENT TO THIS INSTALLATION.

16) THE USE OF RED DISPLAYS SHOULD BE MINIMIZED OR AVOIDED SO AS NOT TO DETRACT FROM THE ATTENTION GETTING CHARACTERISTICS NEEDED IN WARNING AND CAUTION ANNUNCIATORS. RED SHOULD BE USED TO ANNUNCIATE EMERGENCY CONDITIONS REQUIRING IMMEDIATE RESPONSE BY THE FLIGHT CREW. UNITS WITH RED DISPLAYS SHOULD NOT BE LOCATED IN CLOSE PROXIMITY TO WARNING AND CAUTION ANNUNCIATORS. THE INSTALLATION OF UNITS WITH RED DISPLAYS MUST BE EVALUATED ON A CASE BY CASE BASIS TO ENSURE THAT THE EFFECTIVENESS OF THE WARNING AND CAUTION ANNUNCIATORS IS NOT ADVERSELY AFFECTED.

FIGURE 3-2 Wiring Connections for TFM-138B Transceiver

3.7.4 Front Panel Back Lighting

Front panel back lighting connection should be made on pin 3 of the transceiver. The opposite end of this lead should be connected to the panel lighting system of the aircraft. Before connecting, verify the required panel lighting voltage (28 VDC or 5VAC) on the transceiver configuration control label.

3.7.5 Audio Outputs (600 ohms and 4 0hms)

The audio output from pin 9 can be used to drive a 4 ohm speaker up to 2.5 watts. Audio output from pin 1 is 600 ohms, 0.5 watts maximum.

3.7.6 Audio Output Ground

Pin 10 is the ground for both the 4 ohm and 600 ohm audio output signals on pins 9 and 1.

3.7.7 Mic Signal Input

The microphone input signal is to be provided on pin 6, utilizing shielded wire with the shield grounded to pin 10.

3.7.8 Memory Up/Memory Down

Remote scrolling through the 120 memory positions can be achieved by providing a ground to pins 4 (up) and 5 (down) through a momentary contact cyclic switch.

3.7.9 Data Input

Data communications equipment requiring direct access to the modulator and discriminator can be connected via pins 2 and 11. Data cannot be transmitted in CANADA unless equipment is approved for use with the TFM-138B by the communications regulatory authority.

3.8 INTERNAL PROGRAMMING AND GUARD ENABLE/DISABLE JUMPER

The programming and direct frequency entry modes can be disabled by removing the internal enable/disable jumper strap from pins 2 and 3 of J15. Removal of this jumper will prevent operation on any frequencies other than those programmed in the 120 memory positions and two guard receiver memory positions. Removal of the guard receiver programming enable /disable jumper strap from pins 1 and 2 of J15 will totally disable the operator's ability to re-program the 2 guard receiver channels.
The transceiver is always shipped with the two jumpers in the entry enable positions. To place either of the jumpers in the disable position:

1. Remove and retain the seven (7) No. 4-40 screws securing the bottom cover of the transceiver to its chassis.
2. Remove and retain the four (4) No. 4-40 screws securing the guard receiver PCB module in the chassis tray. Remove the guard receiver module from the chassis tray.
3. Remove and retain the five (5) screws securing the chassis tray to the main chassis.

   Remove the chassis tray.
4. You should now have access to the Microprocessor Control Unit (MCU) PCB Module (See Figure 3-3). Remove the enable/disable jumper from pins 3 and 4 or pins 1 and 2 of J15, as desired.
5. Reverse steps 1 through 3 and secure all screws to re-assemble the transceiver.

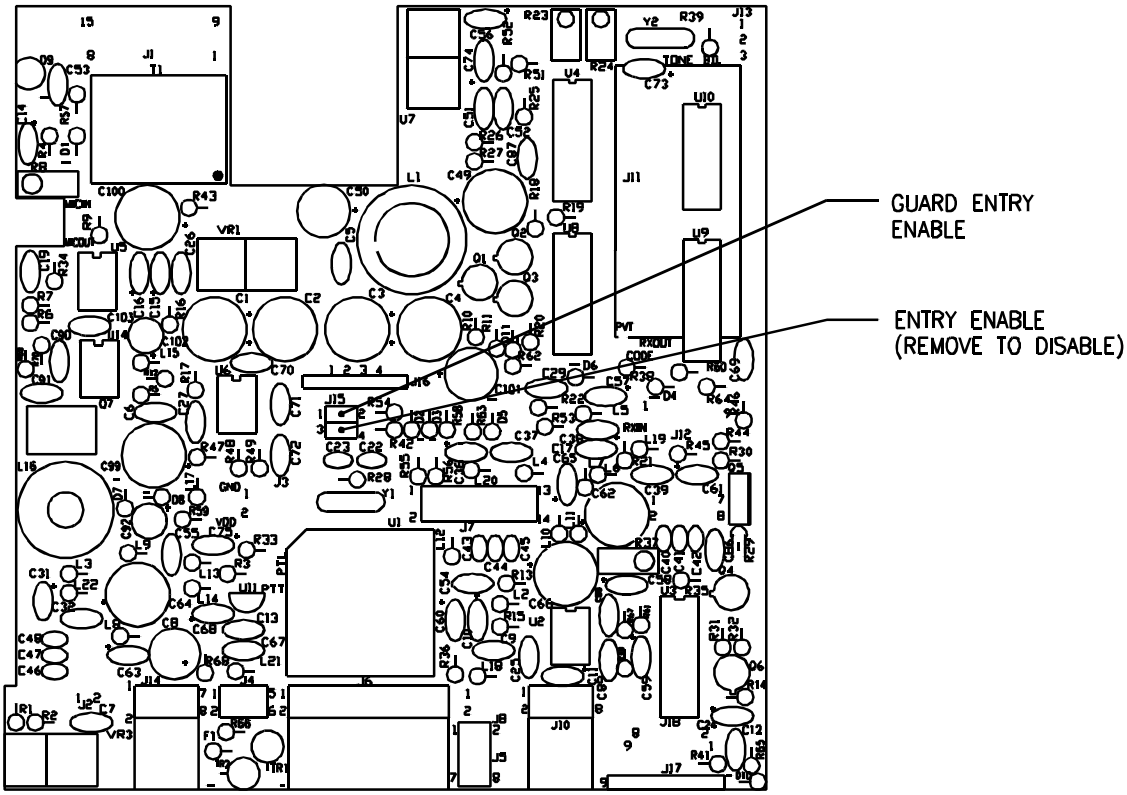

Microprocessor Control Unit (MCU) PCB Module

Notes: R23 is High Power Adjustment
R24 is Low Power Adjustment
J15 Jumper between pins 3 and 4 for Entry Enable
Remove for Entry Disable

FIGURE 3-3 Internal Enable/Disable Jumper and Transmit High/Low Power Adjust Locations

3.9 TRANSMITTER POWER ADJUSTMENTS

The transmitter power is adjusted to a maximum of 10 watts in high power mode and 1 watt in low power mode over the transceiver operating bandwith at the factory. If transmitter RF power re-adjustment is required, perform as follows:

1. Remove bottom cover as described in the previous paragraph (3.8). Access to the two adjustment potentiometers on the Microprocessor Control Unit (MCU) PCB Module is provided by two access holes located at the back of the chassis tray.

2. Connect an RF through-line wattmeter to the antenna connector. Set the operating frequency to 156.000 MHz and key the transmitter.

3. In low power mode, set the low power adjustment potentiometer R24 to produce 1.0 watt of RF output power (See Figure 3-3).

4. In high power mode, set high power adjustment potentiometer R23 to produce 9.5

   watts of RF output power.

5. Verify that the RF output power is between 8 and 10 watts on 138.000 MHz, 156.000 MHz and 174.000 MHz.

6. Replace bottom cover as described in the previous paragraph (3.8).

3.10 TRANSMITTER MICROPHONE LEVEL ADJUSTMENT

1. Set the transceiver operating frequency to 156.000 MHz and connect an appropriate test receiver to the RF output connector. Ensure that the output of the transceiver is terminated into a proper dummy load.

2. Key the transmitter and input a -10 dBm (0.25 VRMS), 1 kHz audio signal into the

   microphone input.

3. Adjust the microphone level potentiometer (R8 on MCU module) through the access hole located on the right side of the chassis (see Figure 3-4) to produce a 3.5 kHz deviation.

4. Verify that the deviation is at least 3 kHz on the following frequencies: 138.000 MHz, 156.000 MHz and 174.000 MHz.

3.11 TRANSMITTER SIDETONE LEVEL ADJUSTMENT

1. Set the transceiver operating frequency to 156.000 MHz and connect an appropriate test receiver to the RF output connector. Ensure that the output of the transceiver is terminated into a proper dummy load.

2. Key the transmitter and input a -10 dBm (0.25 VRMS), 1 kHz audio signal into the microphone input.

3. Adjust the sidetone level potentiometer (R37 on MCU module) through the access hole located on the left side of the chassis (see Figure 3-4) to produce a +3.0 dBm (1.0 VRMS) 600 ohm audio output.

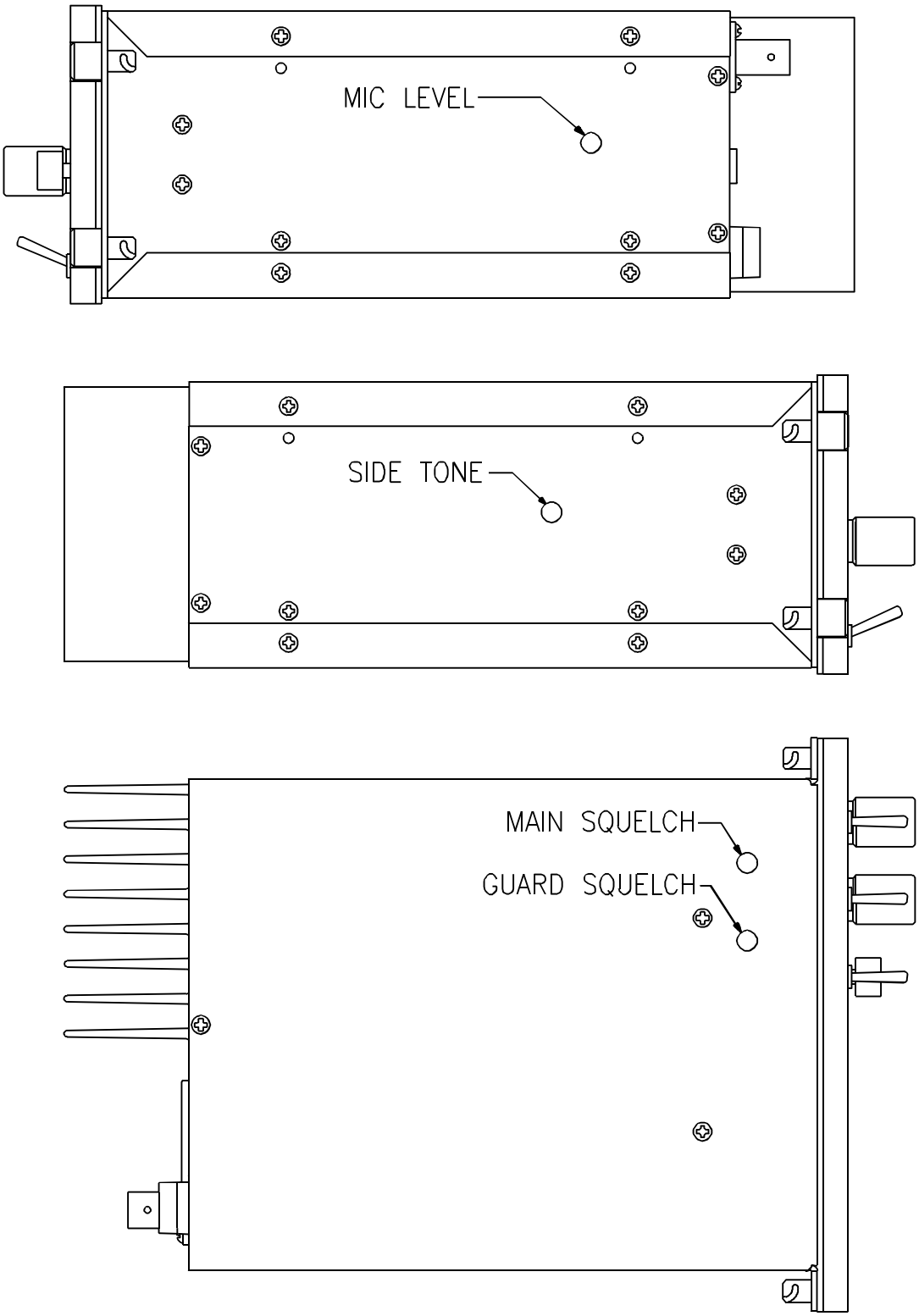

FIGURE 3-4 Microphone and Sidetone Level, Main and Guard Squelch Adjustment Access Holes

3.12 MAIN AND GUARD SQUELCH ADJUSTMENT

The squelch on both the main and guard receivers is factory set to open at approximately 1.0 microvolts. This adjustment can be made or altered to suit local conditions as follows:

1. Set the main receiver of the transceiver to 156.000 MHz. Connect a signal generator to the the antenna input of the transceiver.

2. Set the signal generator to produce a ±3 kHz deviation with a 1 kHz tone on 156.000 MHz. Set the signal generator RF level to 1.0 uV . The squelch indicator LED is on and signal is heard. Set the generator to 0.6uV. The squelch indicator should go off and no signal heard.

3. If not, re-adjust main receiver squelch potentiometer, R3 through the access hole

   located on the bottom of the transceiver chassis (see Figure 3-4).

4. Repeat the above procedure to adjust the guard receiver squelch setting using guard receiver squelch adjustment potentiometer, R4 (see Figure 3-4).

3.13 TRANSMITTER DEVIATION ADJUSTMENT

1. Remove and retain the eight (8) No. 4-40 screws securing the top cover of the transceiver to its chassis. You should now have access to the Main Rx/Tx Module.

2. Set the transceiver operating frequency to 156.000 MHz and connect an appropriate test receiver to the RF output connector. Ensure that the output of the transceiver is terminated into a proper dummy load.

3. Key the transmitter and input a +10 dBm (2.5 VRMS), 1 kHz audio signal into the microphone input.

4. Adjust the wideband deviation limit potentimeter, R30 on the main Rx/Tx module (see Figure 3-5) to produce a ±4.2 kHz deviation. Adjust the narrowband deviation limit potentimeter, R76 on the main Rx/Tx module to produce a ±2.1 kHz deviation.

5. Verify that the deviation does not exceed ±5 kHz for wideband and ±2.5 kHz for narrowband on the following frequencies: 138.000 MHz, 156.000 MHz and 174.000 MHz. Re-adjust R30 or R76 as required, if the deviation exceeds ±5 kHz or ±2.5kHz, respectively.

6. Place top cover on transceiver chassis and secure all eight (8) screws.

3.14 GUARD RECEIVER AUDIO LIMIT FEATURE

Upon special request, 1 mW of guard receiver audio bleed with the guard volume control in the fully CCW (OFF) position, can be provided. This feature can be disconnected as follows:

1. Remove and retain the seven (7) No. 4-40 screws securing the bottom cover of the

   transceiver to its chassis.

2. Find the jumper located at the bottom of the front panel is connected between the CCW position of the guard audio potentiometer (R2) and ground. Remove this jumper.

3. Replace the bottom cover of the transceiver and secure with the seven (7) screws removed in step 1.

Main Receiver/Transmitter PCB Module

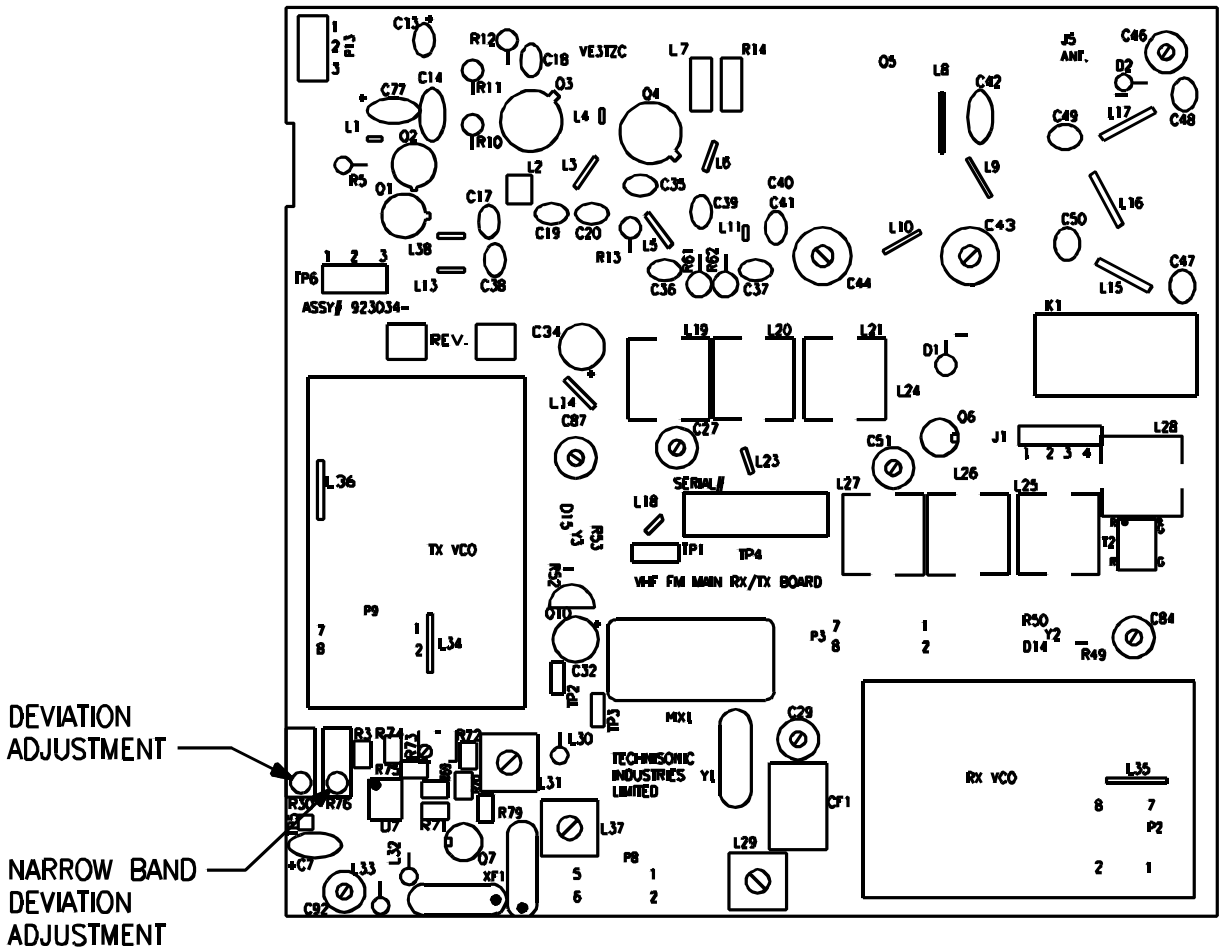

Notes: R30 is for 5.0 KHz (wideband) Deviation Adjustment
R76 is for 2.5 KHz (narrowband) Deviaton Adjustment

FIGURE 3-5 Deviation Adjustment Potentiometer Location

APPENDIX TO "INSTALLATION INSTRUCTIONS"
POST INSTALLATION EMI TEST

PURPOSE

The purpose of this test is to identify any interference that the TFM-138, TFM-138A or TFM-138B may cause with existing aircraft systems. For simplicity all TFM-138 model variations will be referred as TFM-138 series transceivers in this document.

TEST CONDITIONS

The TFM-138 series transceiver should be installed and function tested. The antenna VSWR should be checked. A forward/reverse power check with a in-line wattmeter should show no more than 10% reflected power. For the following tests, insure that the power switch is in the high position.

METHODOLOGY

Most of the EMI tests can be accomplished on the ground. In some cases flight testing is required or is easier. If the aircraft is approved for IFR operations, then it is mandatory that interference between the TFM-138 series Airborne FM and the approach aids be checked in flight.

The GPS should be operational and navigating with at least the minimum compliment of satellites. The VHF comm should be set to the frequencies indicated with the squelch open. VOR/ILS/GS receivers should be set to the frequencies indicated and selected for display If possible, set up a VOR/ILS ramp test set on the frequencies indicated and adjust the output until the flags are out of view. The transponder and encoder should be monitored with ramp test equipment. If possible set the ADF to a nearby navigation station.

Modulate the TFM-138 series transmitter on the indicated frequencies for at least 20 seconds.

Observe the GPS for any degradation in satellite status or availability or flags. Listen for any noise or detected audio signals on the VHF comm(s). Listen for any noise or detected audio signals on the VOR/LOC receiver audio; look for any moment of flags or needles on the VOR/LOC/GS navigation display(s).

List the power plant, fuel and other electric instruments in the chart provided and note any anomalies that occur while transmitting. Assess the results.

If the aircraft is equipped with an autopilot or a stability augmentation system, then test fly the aircraft and verify that operation of the TFM-138 series transceiver does not have adverse effects on these systems. After checking for gross effects at a safe altitude, fly an approach with each of the different navigation systems coupled to the autopilot (ILS, GPS ETC.) and look for any anomalies.

RESULTS

If the installed system passes all of the applicable EMI tests, then no further action is required. If interference is observed then the interference must be assessed against the appropriate standards of airworthiness for the system in question. For example it is permissible for a VFR certified GPS to lose navigation capability while the TFM-138 series unit is transmitting, providing that it recovers properly and promptly, but it is not permissible for an IFR Approach certified GPS to be affected in the same way. A complete discussion of all the standards of airworthiness to be applied in assessing EMI effects is beyond the scope of this document.

PROCEDURE

A. **Operate the TFM-138 series transmitter on the following frequencies for at least 20 seconds. Observe the GPS for any degradation in satellite status or availability or flags.**

FREQUENCIES	GPS #1		GPS #2	
TFM 138	PASS	FAIL	PASS	FAIL
143.180 MHZ				
143.1825 MHZ				
157.5000 MHZ				
157.5425 MHZ				

NOTES:

B. **Determine if the image frequency for the VHF Comm falls within the range of the TFM-138 series unit. If so, select a set of frequencies that will cause the TFM-138 series unit to be set as close as possible to the image frequency. Any one of the many possible sets will suffice. Record those values in the spaces provided in the following chart. Modulate the TFM-138 series transmitter on the following frequencies for at least 20 seconds. Listen for any noise or detected audio signals on the VHF comm.**

Example - Bendix/King KY 196A:
The first IF frequency is 11.4 MHZ. The L.O. is above the received frequency (high side injection), therefore the image frequency is 22.8 MHZ above the selected frequency. Set the KY 196A to 120.000 MHZ and the TFM-138 series Transceiver to 142.8000 MHZ.

FREQUENCIES		RESULTS	
VHF #1	TFM-138 series	PASS	FAIL
135.975	138.0000		
121.150	157.5000		
131.250	157.5000		
Image:			

FREQUENCIES		RESULTS	
VHF #2	TFM-138 series	PASS	FAIL
135.975	138.0000		
121.150	157.5000		
131.250	157.5000		
Image:			

NOTES:

C. **Determine if the image frequency for the VOR/ILS Nav falls within the range of the TFM-138 series unit. If so, select a two sets of frequencies that will cause the TFM-138 series transceiver to be set as close as possible to the image frequency. Chose one set in the localizer frequency range, and one in the VOR frequency range. Record those values in the spaces provided in the following chart. Modulate the TFM-138 series transmitter on the following frequencies for at least 20 seconds. Listen for any noise or detected audio signals on the receiver audio; look for any moment of flags or needles on the navigation display.**

FREQUENCIES		RESULTS	
VOR/ILS #1	TFM-138 series	PASS	FAIL
108.000	162.0000		
108.100	162.1500		
Image:			
Image:			

FREQUENCIES		RESULTS	
VOR/ILS #2	TFM-138 series	PASS	FAIL
108.000	162.0000		
108.100	162.1500		
Image:			
Image:			

NOTES:

D. **Modulate the TFM-138 series transmitter on the following frequencies for at least 20 seconds. Look for any moment of flags or needles on the navigation display.**

FREQUENCIES		RESULTS	
G/S #1	TFM-138 series	PASS	FAIL
334.7 (108.1)	167.3500		

FREQUENCIES		RESULTS	
G/S #1	TFM-138 series	PASS	FAIL
334.7 (108.1)	167.3500		

NOTES:

NOTE:

For the following tests, select a frequency at the top, middle and bottom of the range of the TFM - 138 series transceiver.

Frequency #1_____ Frequency #2 _____

Frequency #3_____

E. At a safe altitude engage the autopilot or stability augmentation system. Modulate the TFM- 138 series transmitter on the above frequencies for at least 20 seconds. Observe any effect on the autopilot or stability augmentation system.

Observations:

F. Perform a coupled ILS approach to the aircraft's certified limits. Modulate the TFM-138 series transmitter on the above frequencies for at least 20 seconds. Observe any effect on the autopilot. Repeat for each different system such as ILS #2, GPS, FMS ETC.

Observations:

G. List the power plant, fuel and other electric instruments in the chart provided and note any anomalies that occur while transmitting. Assess the results.

STEP	SYSTEM	PASS	FAIL	NOTES
1	Xponder & Encoder			
2	ADF 1 & 2			
3	VG			
4	Compass			
5	Directional Gyro			
6	Oil Pressure			
7	Fuel Pressure			
8	Oil Temp			
9	Amps			

STEP	SYSTEM	PASS	FAIL	NOTES
10	Bus Voltage			
11	Fuel %			
12	Ng			
13	TOT			
14	Torque %			
15	Annunciators			
16	Digital Clock			

STEP	SYSTEM	PASS	FAIL	NOTES

STEP	SYSTEM	PASS	FAIL	NOTES

STEP	SYSTEM	PASS	FAIL	NOTES

NOTES: