Hunter fans use several styles of fan blade irons (brackets that hold the blade to the fan).

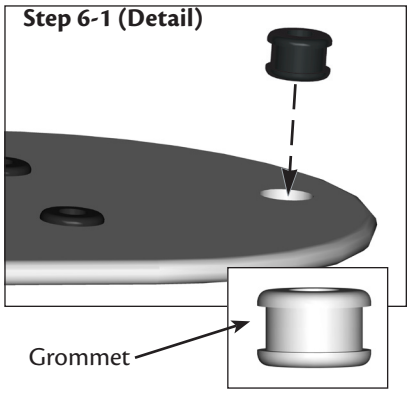

6-1. Your fan may include blade grommets. If your fan has grommets, insert them by hand into the holes on the blades.

6-2. Attach each blade to a blade iron using three blade assembly screws. If you used grommets, the blades may appear slightly loose after screws are tightened. This is normal.

6-3. Remove the blade mounting screws and rubber shipping bumpers from the motor.

6-4. For each blade, insert one blade mounting screw through the blade iron, and attach lightly to the fan. Insert the second blade mounting screw, then securely tighten both mounting screws.

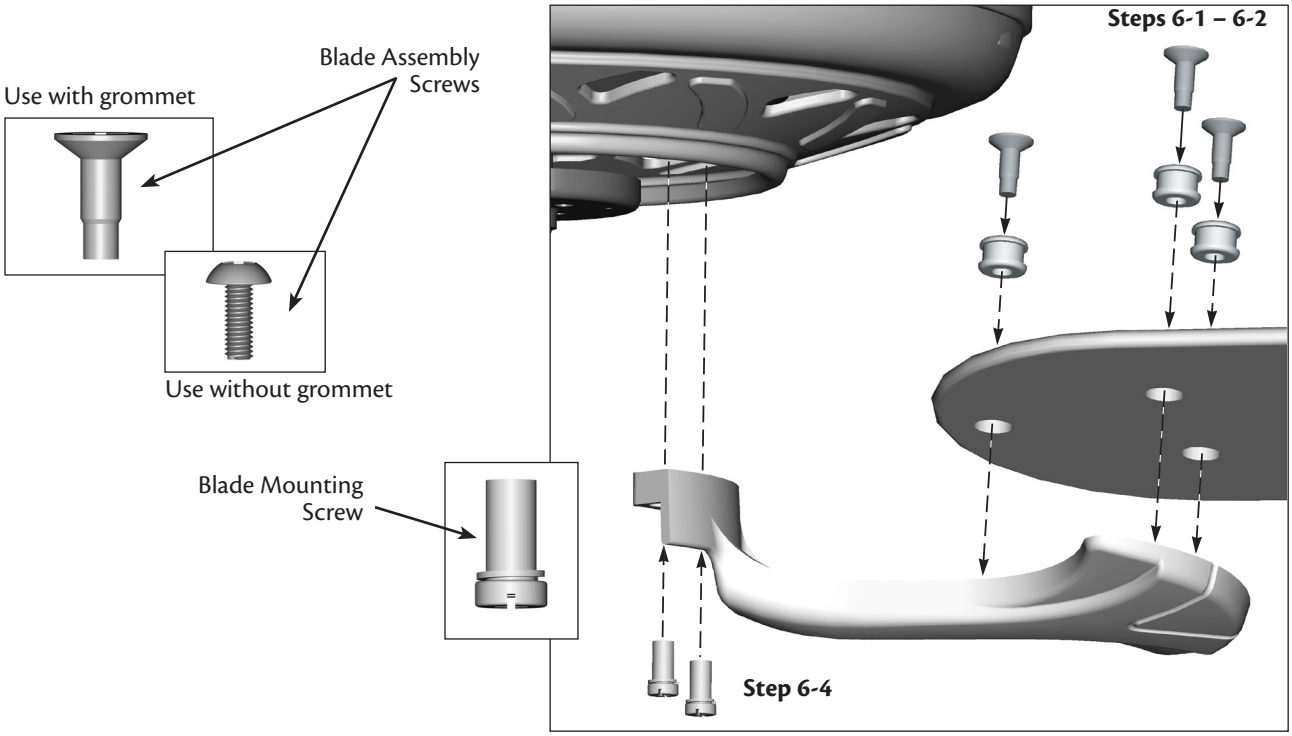

7 • Installing the Light Kit

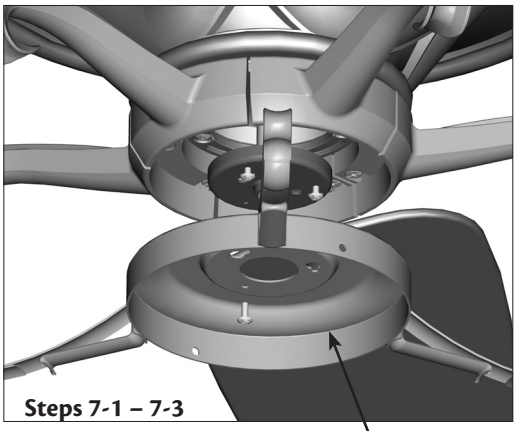

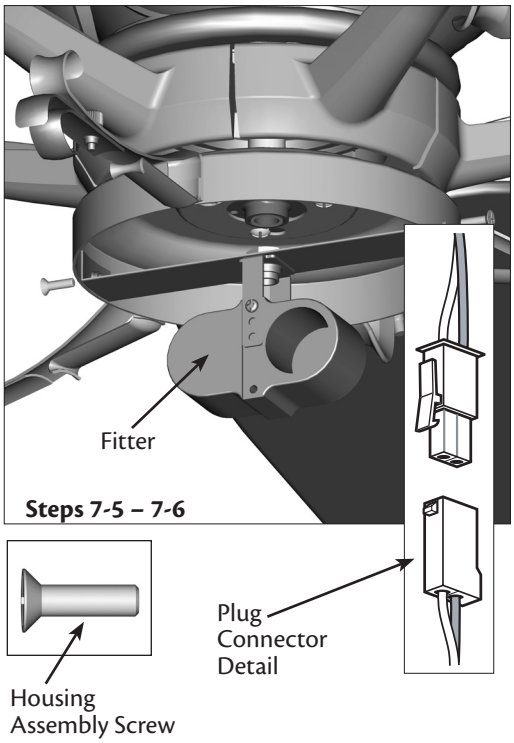

⚠ WARNING: Use only the light fixture supplied with this fan model.

7-1. To attach the upper light kit assembly, partially install two #6-32 x 3/8" housing assembly screws into the switch housing mounting plate.

7-2. Feed the upper plug connector through the center opening of the assembly.

7-3. Align the keyhole slots in the assembly with the housing assembly screws.

7-4. Turn the assembly counterclockwise until the housing assembly screws are firmly situated in the narrow end of the keyhole slots. Install the remaining #6-32 x 3/8" screw into the housing. Tighten all three screws firmly.

⚠ CAUTION: Make sure the upper light kit assembly is securely attached to the switch housing mounting plate. Failure to properly attach and tighten all three assembly screws could result in the switch housing and light fixture falling.

7-5. To attach the light kit, connect the upper plug connector from the motor to the lower plug connector in the light kit.

Note: Both plug connectors are polarized and will only fit together one way. Make sure the connectors are properly aligned before connecting them. Incorrect connection could cause improper operation and damage to the product.

7-6. Place the light kit fitter inside the upper light kit assembly. Align the side screw holes. Attach the fitter to the upper assembly with two #6-32 x 3/8" assembly screws.

7-7. Install two 60 Watt A15 bulbs.

7-8. To install the glass shade, loosen the thumbscrew and slide the moveable cradle out.

7-9. Seat the shade in the three cradles. Push the moveable cradle back in and tighten the thumbscrew.

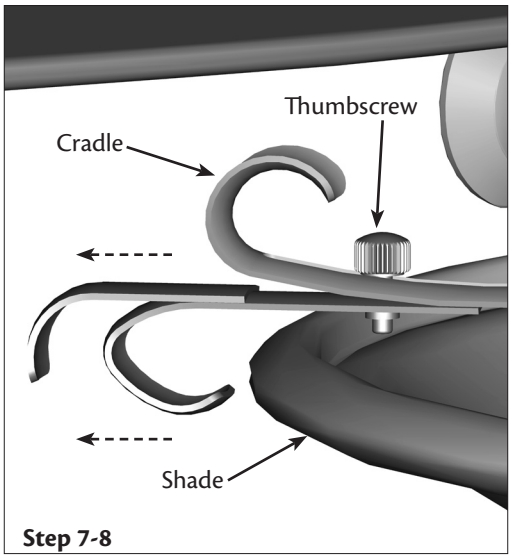

Step 7-8

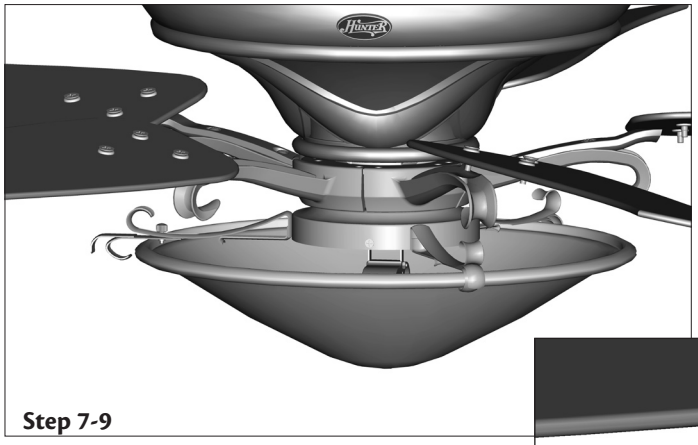
Step 7-9

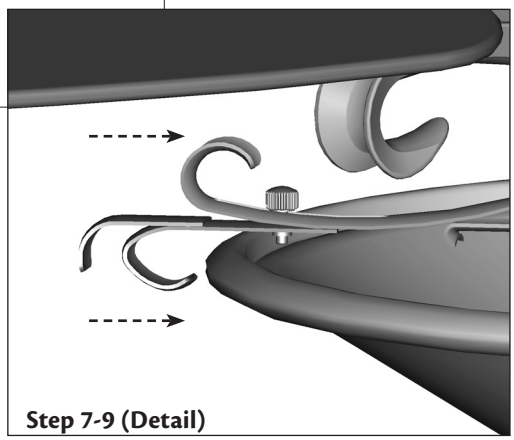
Step 7-9 (Detail)

8 • Assembling the Remote Control and Mounting the Cradle

Step 8-1

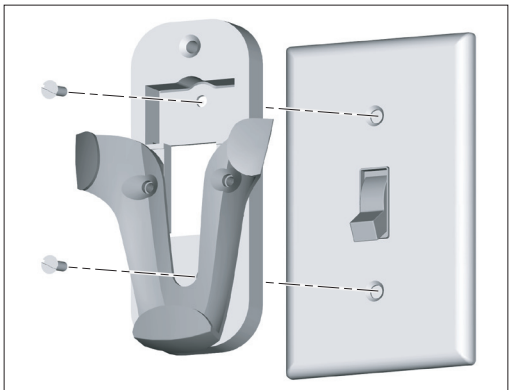

Step 8-2

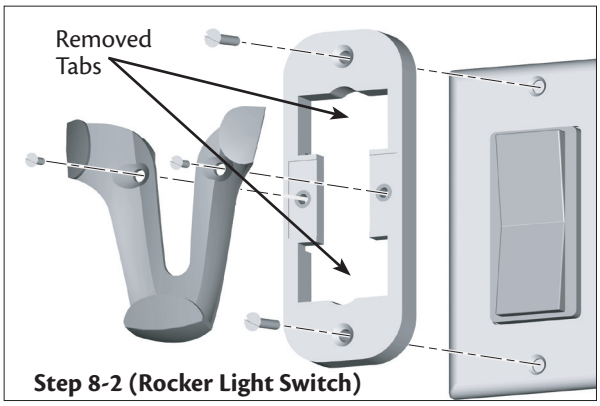

Step 8-2 (Rocker Light Switch)

8-1. To install the battery, remove the back cover of the remote. Insert the included 12 volt alkaline battery (Type 23A, MN-21 or equivalent) inside the remote, matching polarity on the battery as indicated by the + and - symbols in the battery compartment. Replace the cover.

If you are using more than one remote controlled fan in the same area and want to control them separately, you must change the dip switch settings in the remote before you install the battery. For instructions on setting the dip switches, read the box on the next page.

8-2. **To install the remote cradle on a switch plate,** remove the two screws holding the switch cover plate. Do not remove the cover plate.

Note: If you are installing the remote cradle on a rocker light switch, first break off the two tabs by pushing outward.

Orient the control cradle by lining up the two mounting holes with those on the switch. Insert and tighten the screws (do not over tighten).

8-3. **To install the remote cradle on the wall,** locate a 2 x 4 wall stud in a convenient location. Orient the remote cradle over the 2 x 4 stud. Use 1" wood screws in either the inner or outer mounting holes.

Wall anchors and 6-32 x 1" screws may be used in situations where mounting to a stud is not possible. Use the inner mounting holes.

⚠ **CAUTION:** The remote control device complies with part 15 of the FCC rules. Changes or modifications not expressly approved by Hunter Fan Company could void your authority to operate this equipment.

Operation is subject to the following two conditions:

1. This device may not cause harmful interference.
2. This device must accept any interference received, including interference that may cause undesired operation.

Note: Use with a fan that incorporates an air gap switch (normal on-off wall switch).

⚠ **WARNING:** Maximum fan load is 100 Watts; maximum lamp is 300 Watts. Do not use any speed control with this product.

Setting the Dip Switches

You will only have to change the dip switch settings in the remote if you are using more than one remote controlled fan in the same area and want to control them separately. You may want to label your remotes to ensure you do not mix them up.

1. At the circuit breaker or fuse box, turn the power off for the fan you want to change. Do not turn the power off at the circuit breaker for the previously installed fan, as you may inadvertently change the dip switch code settings for it as well.
2. Slide the cover off the back of the remote and remove the battery. The battery must be removed when changing dip switch settings. Refer to Step 8-1.
3. Change the dip switch settings, so that they are different from the previously installed fan.
4. Replace the battery and cover.
5. At the circuit breaker or fuse box, turn the power back on for the fan whose settings you are changing.
6. Within 20 seconds of restoring power, push the 3 (high), 2 (medium), and 1 (low) buttons (in that order) on the remote.

   Note: The receiver (built into the fan) has a memory function that retains the last dip switch code setting. The setting will not change in the event of power failure or if the power to the fan is inadvertently shut off.

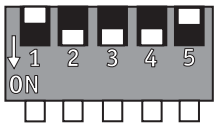

Dip Switches
Set to 01110

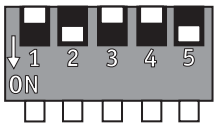

Dip Switches
Set to 01001

9 • Operating and Cleaning Your Ceiling Fan

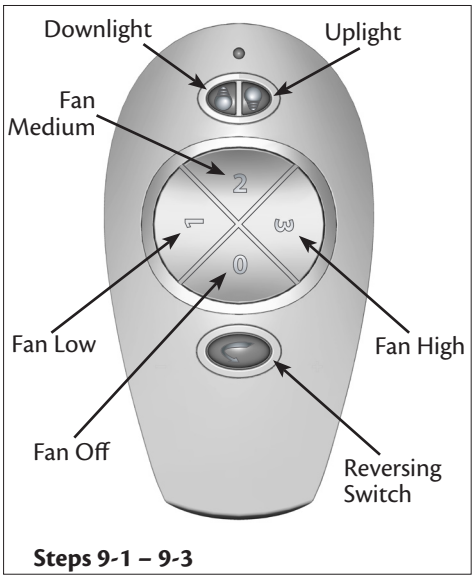

Steps 9-1 – 9-3

9-1. Turn on electrical power to the fan. The first time you turn the fan on, push the 3 (high), 2 (medium), and 1 (low) buttons (in that order) on the remote to send the code to the receiver. The receiver (built into the fan) has a memory function that retains the dip switch code setting. This setting will not change in the event of power failure or if the power to the fan is inadvertently shut off.

9-2. To start the fan, press the speed button on the remote at the level you desire: 3 for high, 2 for medium, 1 for low. To turn off the fan, press the off button on the remote.

9-3. You can control the uplight and downlight using separate buttons on the remote. To turn the light on or off independently from the fan, press the appropriate light button once for gradual off or twice for instant off.

With the Auto Resume feature, the light will come on at the level you used last. You can also hold the light button down to use the remote as a dimmer. (As you hold the button, the light level will move throughout its entire range within 16 seconds.) Release the button at the desired level.

9-4. Ceiling fans work best by blowing air downward (counterclockwise blade rotation) in warm weather to cool the room with a direct breeze. In winter, having the fan draw air upward (clockwise blade rotation) will distribute the warmer air trapped at the ceiling around the room without causing a draft.

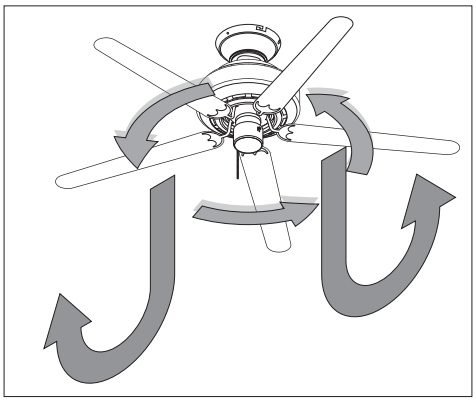

In warm weather, use downward air flow pattern

To Change Airflow Direction
Turn the fan off and let it come to a complete stop. Press the reversing switch on the remote. Restart fan.

9-5. For cleaning finishes, use a soft brush or lint-free cloth to prevent scratching. A vacuum cleaner brush nozzle can remove heavier dust. Remove surface smudges or accumulated dirt and dust using a mild detergent and a slightly dampened cloth. You may use an artistic agent, but never abrasive cleaning agents, as they will damage the finish.

9-6. Clean wood finish blades with a furniture polishing cloth. Occasionally, apply a light coat of furniture polish for added protection and beauty. Clean painted and high-gloss blades in the same manner as the fan finish.

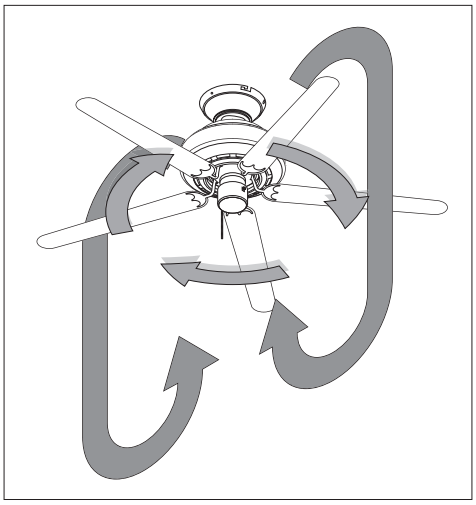

In cold weather, use upward air flow pattern

Problem: Nothing happens; fan does not move.

1. Turn power on, replace fuse, or reset breaker.
2. Loosen canopy, check all connections according to the wiring the fan section.
3. Check the plug connection in the switch housing.
4. Push motor reversing switch firmly up or down to ensure that the switch is engaged.
5. Pull the pull chain to ensure it is on.
6. Remove the shipping bumpers.

Problem: Noisy operation.

1. Tighten the blade bracket screws until snug.
2. Tighten the blade screws until snug.
3. Check to see if the blade is cracked. If so, replace all the blades.
4. Change to an approved speed control.
5. Be sure that the glass is secure.
6. Check and tighten the screws in the switch housing mounting plate and in the upper and lower switch housing.

Problem: Excessive wobbling.

1. If your fan wobbles when operating, use the enclosed balancing kit and instructions to balance the fan.
2. Tighten all blade and/or blade iron screws.
3. Turn power off, support fan very carefully, and check that the hanger ball is properly seated.

If you need parts or service assistance, please call 888-830-1326 or visit us at our WEB site at http://www.hunterfan.com.

Hunter Fan Company
2500 Frisco Avenue
Memphis, Tennessee 38114