Hunter

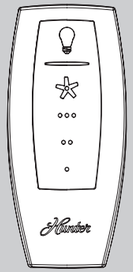

Universal Ceiling Fan Remote Control

Model #99110

Installation

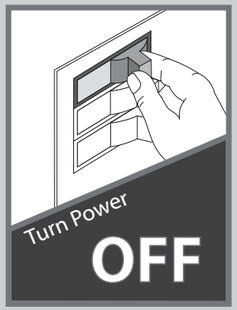

Before installing the Universal Remote Control Receiver, use the pull chains to set the fan speed to HIGH and the light to ON. Be sure power is OFF before proceeding with installation.

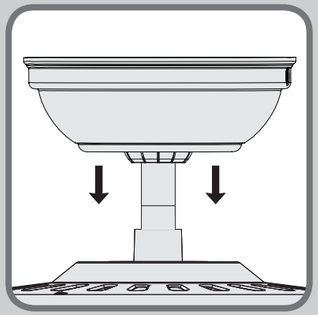

Remove the canopy. If uncertain how to remove it, reference the fan's owner's manual. With wiring exposed, it may be helpful to note existing wire connections or take a digital photo for reference. Remove the wire connectors that connect the wires from the outlet box to the fan, leaving the grounding wires connected.

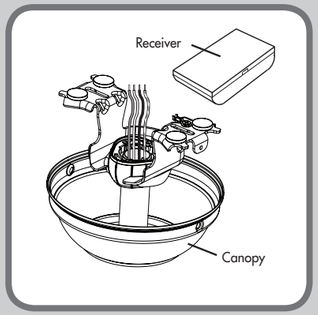

OR

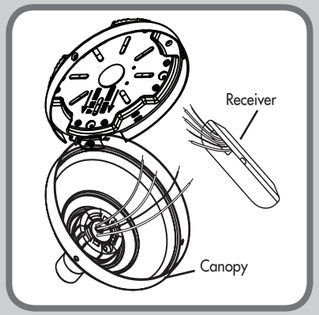

OR

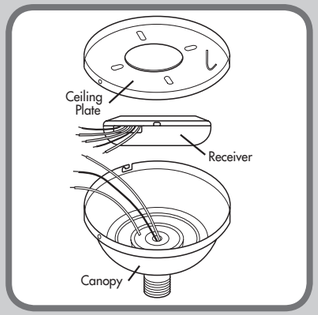

OR

For low profile fans, the receiver should be secured to the hanger bracket with a cable tie.

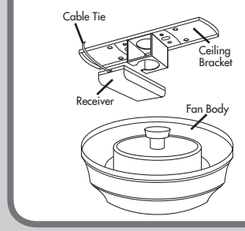

Choose the hanging system that most closely resembles the one used by your fan and install the receiver and wire as directed.

Note: Some fans may have considerable excess lead wire. For easier canopy installation, cut the excess wire, leaving a minimum of 8" remaining. Re-strip the fan lead wires 1/2". Place remaining excess wire into the ceiling electrical box. **The bracket and fan must remain properly grounded.**

You may have installation issues if the fan is installed on an angled ceiling.

Wiring

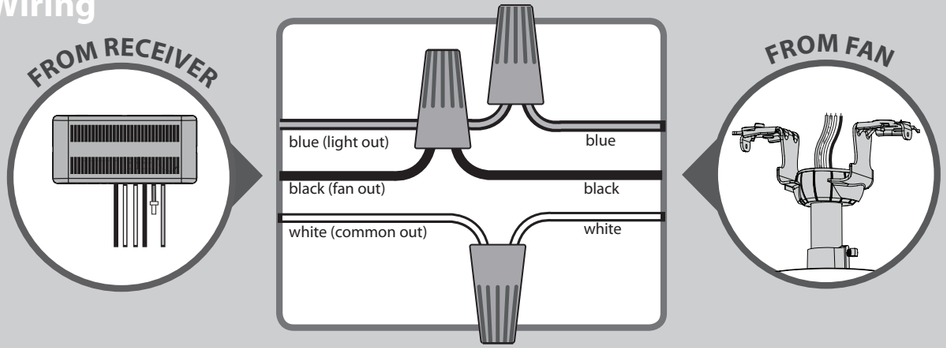

CONNECT WIRES FROM RECEIVER TO FAN -Using the blue wire connectors connect the white wire from the receiver (marked "common out") to the white wire from fan. Connect the black wire from the receiver (marked "fan out") to the black wire from the fan. Connect the blue wire from the receiver (marked "light out") to the blue wire (or possibly black with white stripe) from the fan.

Note: The red wire from the receiver has a pre-installed wire terminator. It will not be used.

If you're uncertain about wire colors or connections, please contact a qualified electrician.

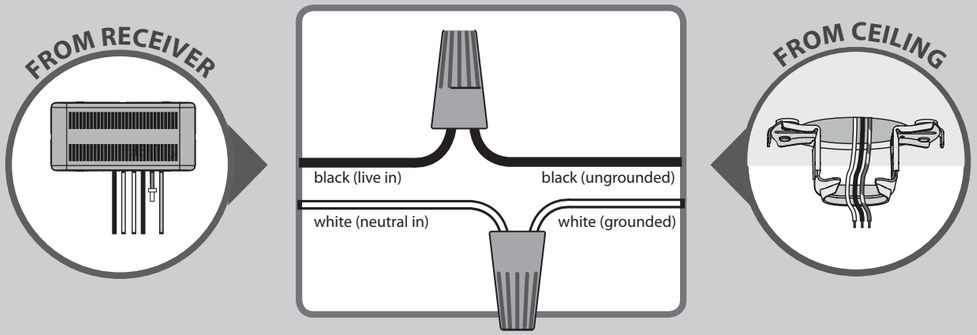

CONNECT WIRES FROM RECEIVER TO WIRES FROM OUTLET BOX - Using an orange wire connector connect the black wire (ungrounded) from the ceiling to the black wire from the receiver (marked "live in"). Connect the white wire (grounded) from the ceiling to the white wire from the receiver (marked "neutral in").

AFTER ALL WIRES ARE CONNECTED and secured with wire connectors, re-install the canopy.

Turn the splices upward and push them carefully back through the hanger bracket into the outlet box. Spread the wires apart, with the grounded wires on one side of the outlet box and the ungrounded wires on the other side of the outlet box.

To avoid possible electrical shock, before installing or servicing your fan, disconnect the power by turning off the circuit breakers to the outlet box and associated wall switch location. If you cannot lock the circuit breakers in the off position, securely fasten a prominent warning device, such as a tag, to the service panel.

Maintenance

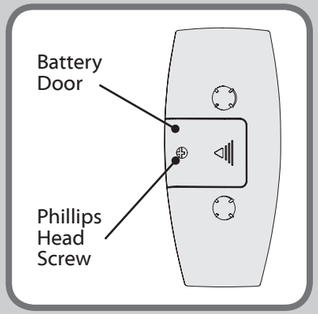

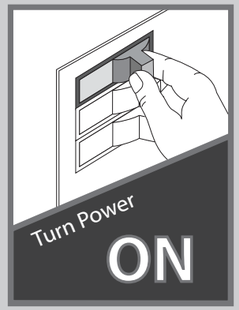

Installing or changing the battery - To access the battery compartment remove the small Phillips head screw that secures the battery door to the transmitter assembly. Replace with a CR2032 battery when necessary. The battery should be installed with the positive (+) side up.

Pairing

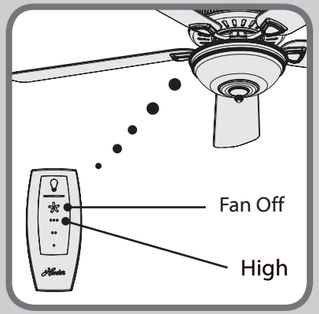

Note: The remote must be paired before the fan will operate.

Within 3 minutes of restoring power to the fan, press both the Fan Off button and the High button for at least 4 seconds. The fan will turn at the lowest speed signifying that the remote pairing process is complete. If using the transmitter with multiple fans, repeat this process for each fan.

Operations

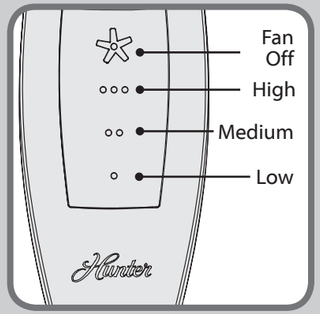

The Fan Off button only turns the fan off. To turn the fan on, press one of the fan speed buttons. They are located under the Fan Off button.

ooo	High
oo	Medium
o	Low

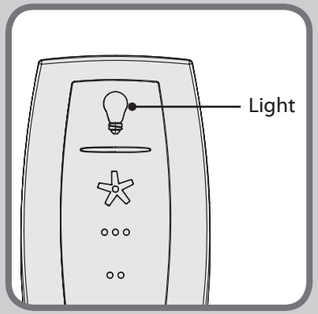

Quickly press the Light button to turn the lights off and on. Hold the Light button to raise and dim the light level.

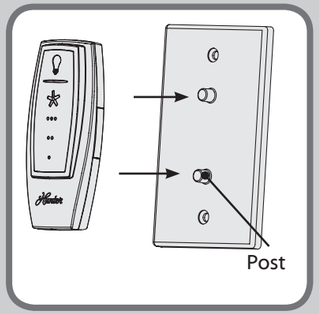

Your 3-Speed Remote comes with a wall plate that has two (2) posts on which to mount your transmitter when not in use.

Safe-Exit

The Safe-Exit Program gives you about thirty seconds of light when you turn the lights off to exit the room before the lights go out. To use Safe-Exit:

- Press the fan power button off for at least three seconds to initiate the Safe-Exit Mode.
- The lights will flash for visual confirmation.
- The lights will stay on 50% brightness for 15 seconds and then begin to dim. After a total of 30 seconds, the lights will be completely off.

Note: For CFL lighting, the lights will stay on 100% brightness for 30 seconds. After a total of 30 seconds, the lights will be completely off.

Troubleshooting

Fan will not start

- Make sure the power is on at the circuit breaker and the wall switch.
- Make sure the battery is working.
- Make sure that the transmitter and receiver are paired.
- Check wire connections inside of the canopy.

Remote control of fan is erratic

- Make sure battery is installed correctly.
- Install a fresh battery.

Transmitter only works when held at close range

- Change battery.

Lights do not dim

- Check to see if a CFL bulb is installed. The control has a feature that automatically detects CFL bulbs and turns off dimming if a CFL bulb is installed.

HUNTER FAN COMPANY CONTROL LIMITED WARRANTY

The Hunter Fan Company makes the following limited warranty to the original purchaser of the Control ("Control"): Your Control is warranted to be free from defects in material and workmanship for a period of one year from the date of sale. If the Control malfunctions or fails within the warranty period due to a defect in material or workmanship we will replace it free of charge. IF THE ORIGINAL PURCHASER CEASES TO OWN THE CONTROL, THIS WARRANTY AND ANY IMPLIED WARRANTY, INCLUDING BUT NOT LIMITED TO ANY IMPLIED WARRANTY OF MERCHANTABILITY OR FITNESS FOR A PARTICULAR PURPOSE, ARE VOIDED. THIS WARRANTY IS IN LIEU OF ALL OTHER EXPRESS WARRANTIES. THE DURATION OF ANY IMPLIED WARRANTY, INCLUDING, BUT NOT LIMITED TO, ANY IMPLIED WARRANTY OF MERCHANTABILITY OR FITNESS FOR A PARTICULAR PURPOSE, IN RESPECT TO ANY CONTROL, IS EXPRESSLY LIMITED TO THE PERIOD OF THE EXPRESS WARRANTY SET FORTH ABOVE FOR SUCH CONTROL. This warranty excludes malfunctions or failures which were caused by repairs by persons not authorized by us, mishandling, improper installation, modifications, or damage to the Control while in your possession, or unreasonable use. This warranty does not apply to batteries or to deterioration or damage to the product caused by the use of faulty batteries. To obtain a replacement, return your Control postage prepaid along with proof of purchase to Hunter Fan Company Service Department at 7130 Goodlett Farms Pkwy., Memphis, TN 38016. IN NO EVENT SHALL HUNTER FAN COMPANY BE LIABLE FOR CONSEQUENTIAL OR INCIDENTAL DAMAGES. SOME STATES DO NOT ALLOW LIMITATIONS ON HOW LONG AN IMPLIED WARRANTY LASTS OR THE EXCLUSION OR LIMITATIONS OF INCIDENTAL OR CONSEQUENTIAL DAMAGES SO THE ABOVE LIMITATIONS OR EXCLUSIONS MAY NOT APPLY TO YOU. THIS WARRANTY GIVES YOU SPECIFIC LEGAL RIGHTS AND YOU MAY ALSO HAVE OTHER RIGHTS WHICH VARY FROM STATE TO STATE.

If you have problems installing or operating your fan, do not return this product to the dealer. Call our Consumer Affairs Hotline.

888-830-1326

Monday through Friday
8 am to 4:30 pm Central

Read and Save These Instructions

This product conforms to UL Standard 507.

⚠ WARNINGS

This device complies with RSS-210 of Industry Canada. Operation is subject to the following two conditions: (1) this device may not cause interference, and (2) this device must accept any interference, including interference that may cause undesired operation of the device.

1. This device complies with part 15 of the FCC Rules. Operation is subject to the following two conditions: (1) this device may not cause harmful interference, and (2) this device must accept any interference received, including interference that may cause undesired operation.

2. This equipment has been tested and found to comply with the limits for a Class B digital device, pursuant to Part 15 of the FCC Rules. These limits are designed to provide reasonable protection against harmful interference in a residential installation. This equipment generates, uses and can radiate radio frequency energy and, if not installed and used in accordance with the instructions, may cause harmful interference to radio communications. However there is no guarantee that interference will not occur in a particular installation. If this equipment does cause harmful interference to radio or television reception, which can be determined by turning the equipment off and on, the user is encouraged to try to correct the interference by one or more of the following measures: Reorient or relocate the receiving antenna, Increase the separation between the equipment and receiver, Connect the equipment into an outlet on a circuit different from that to which the receiver is connected. Consult the dealer or an experienced radio/TV technician for help. Note: Any changes or modifications to the transmitter or receiver not expressly approved by Hunter Fan Company may void one's authority to operate this remote control.