BLE 5.3, Thread, Zigbee Modules, BT840/F/E/N/NE

Ver 1.27 July 2024

BluNor BT840F is a powerful, highly flexible, ultra low power Bluetooth Low Energy (BLE) using Nordic nRF52840 SoC. With an ARM Cortex™ M4F MCU, available 1MB flash, 256KB RAM, embedded 2.4GHz multi-protocol transceiver, and an integrated PCB trace antenna or u.FL connector for an external antenna. An nRF21540 power amplifier is integrated in BT840N and BT840NE to increase Bluetooth range. The link budget between two BT840NEs is up to 129 dB and 137 dB for 1Mbps and 125 Kbps, respectively. It allows faster time to market with reduced development cost.

Bluetooth ranges are measured in environments with Low Multiple Path Interference (**LMPI**) and antenna at 5 feet (1.52 meters), typical height of thermostat in the USA. Ranges for LMPI, correlating to actual link budget, indicate the Bluetooth signal strength for penetrating walls in buildings.

Specifications:

- nRF52840 QIAA, ARM Cortex M4F, 64 MHz
- ARM® TrustZone® Cryptocell-310 co-processor
- Complete RF solution with integrated antenna or u.FL.
- BLE 5 data rate: 2Mbps, 1Mbps, 500kbps,125kbps.
- IEEE 802.15.4 data rate: 250 Kbps
- 2.4 GHz proprietary data rate: 2 Mbps, 1 Mbps
- DC-DC converter, inductors on board.
- Direct powered by Lithium or USB supply (up to 5.5V)
- Serial Wire Debug (SWD)
- Nordic SoftDevice Ready
- Over-the-Air (OTA) firmware update
- Flash/RAM: 1MB/256KB.
- 48 General purpose I/O pins
- USB 2.0 full speed (12 Mbps) controller
- QSPI 32 MHz interface
- High speed 32 MHz SPI
- Type 2 NFC-A tag with wake-on field.
- Programmable peripheral interconnect (PPI)
- 12 bit/200 Ksps ADC, 8 channels
- 64 level comparator
- 15 level comparator with wake-up from OFF.
- 4x4-channel pulse width modulator (PWM)
- Audio: I2S, digital microphone interface (PDM)
- 5 x 32 bit timers with counter mode
- Up to 4x SPI masters/3x SPI slaves
- Up to 2x I2C compatible 2-wire masters/slaves
- 2x UART (CTS/RTS)
- Quadrature Demodulator (QDEC)
- 3x real time counters (RTC)
- 128-bit AES HW encryption
- SoC Receiver Sensitivity: -96 dBm at 1Mbps
- TX power: Up to +21 dBm, up to +6 dBi antenna gain.
- Hybrid pins: 16 castellated and 45 LGA.
- Operation voltage: 1.7V to 5.5V
- BLE and 802.15.4 certifications for all modules.
- Operation temperature: -40°C to +85°C
- QDID: 108621,182626

APprotect

- **AP**protect: New modules supporting approtect, "-p" is added to the part number, e.g., BM832-p. A "p" mark is on the RFI shield.
- **AP**availability: The production date of approtect versions.
- Visit Fanstel for additional approtect information

Model Summaries

module	BT840F	BT840	BT840E	BT840N	BT840NE
APprotect	BT840F-p	BT840-p	BT840E-p	BT840N	BT840NE
SoC	nRF52840-QIAA	nRF52840-QIAA	nRF52840-QIAA	nRF52840-QIAA	nRF52840-QIAA
Size	15x20.8x1.9mm	14x16x1.9mm	14x16x1.9mm	15x29.9x1.9mm	15x29.9x1.9mm
BT Antenna	PCB trace	PCB trace	ANT060	PCB trace + PA	PA+ANT060
Max TX, radiated	+9.4 dBm	+5.0 dBm	+14.5 dBm	+22.6 dBm	+27.0 dBm
32.768 sleep crystal	External	External	External	Integrated	Integrated
BT range,1 Mbps, LMPI	1000 meters	150 meters		1170 meters	>1170M, est.
BT range, 1Mbps, 1.52m	390 meters	120 meters		900 meters, est.	>1170M, est.
BT range, 125 Kbps, LMPI.	2300 meters	320 meters	3400 meters, est.	>4500 meters, est.	>4500M, est.
BT range, 125 kBps, 1.52m	640 meters	210 meters		1240 meters, est.	>1920M, est.
FCC ID	X8WBT840F	X8WBT840F	X8WBT840F	X8WBT840N	X8WBT840N
Canada IC ID	4100A-BT840F	4100A-BT840F	4100A-BT840F	4100A-BT840N	4100A-BT840N
Europe CE, Australia RCM	Compliant	Compliant	Compliant	Compliant	Compliant
Japan TELEC	201-190710/00	201-190710/00	201-190710/00	201-230649	201-230649
Korea KCC	R-C-F8A-BT840	R-C-F8A-BT840	R-C-F8A-BT840		
Taiwan NCC	NCC-RCB-AN	NCC-RCB-AN	NCC-RCB-AN		
Brazil ANTEL	03583-22-14656	03583-22-14656	03583-22-14656		
Availability	Production	Production	Production	Production	Production

Table Of Contents

1. Introduction....3
BT840F....3
BT840....4
BT840E....4
BT840N....5
BT840NE....5
2. Codes Development Using Nordic Tools....7
Over-The-Air DFU....7
SoftDevices....7
Development Tools....7
3. Product Descriptions....8
Block Diagram of nRF52840....8
ARM Trustzone CryptoCell 310....9
Mechanical Drawings....11
Pin Assignments of BT840....14
Pin Function....16
Mounting BT840F on the Host PCB....18
Host Board Design for Low Cost or Long Range....19
Control nRF21540 Power Amplifier....20
Codes for Controlling nRF21540....20
4. Bluetooth Range....23
Settings for Certification Testings....23
Bluetooth Range Measurements....23
Recommendation for Long Range Applications....25
BT840XE Maximum Link Budget Calculation....25
5. AT Commands....26
6. BT840F Evaluation Board....26
Nordic Development Tools....27
Android OS Apps....27
iOS Apps....27
BT840F V4 EvaluationBoard Schematics....28
Suggestion for Battery Power Application....29
7. Miscellaneous....30
Soldering Temperature-Time Profile for Re-Flow Soldering....30
Cautions, Design Notes, and Installation Notes....30
Packaging and Lot Number....34
FCC Label....34
Revision History....35
Contact Us....36

1. Introduction

BluNor BT840F Series are powerful, highly flexible, ultra low power wireless modules using Nordic nRF52840 SoCs. With an ARM Cortex™ M4F MCU, 1MB flash, 256KB RAM, embedded 2.4GHz multi-protocol transceiver, and an integrated antenna, it allows faster time to market with reduced development cost.

The following is a block diagram of BT840F. Antenna circuit and main clock are integrated. All 48 GPIOs of nRF52840 can be accessed from main board. For lower power consumption at idle state, a 32.768 kHz crystal can be added on the host board. Connection to an external NFC (Near Field Communication) antenna is provided.

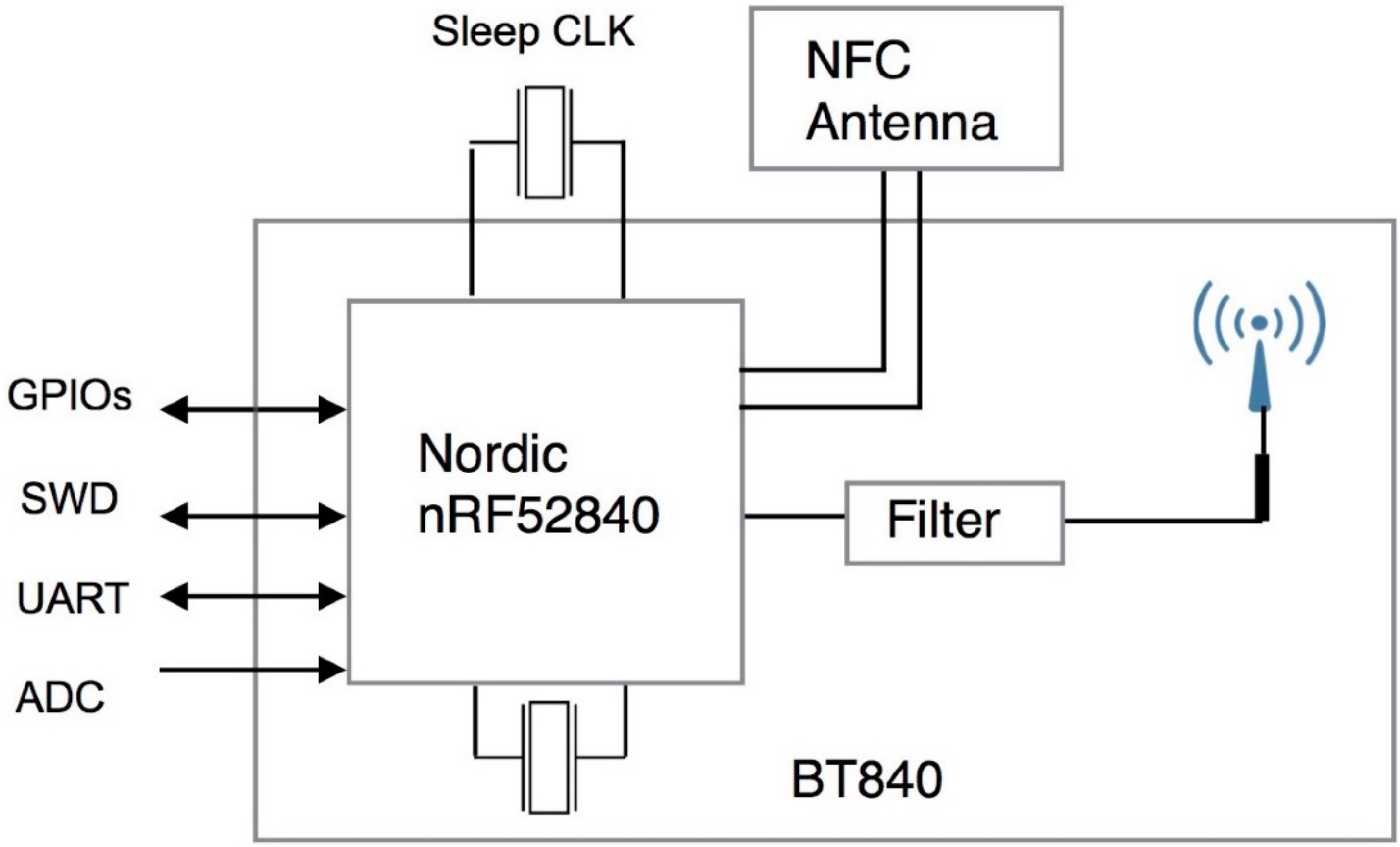

BlurNor BT840F is a sister module of BT832F. The physical size is the same. There are 21 additional LGA pins for additional GPIOs provided by nRF52840.

There are 6 modules in the BT840F Series.

BT840F

- BT840F: uses an nRF52840 QIAA
- BT840F-p: uses an nRF52840 QIAA F or newer, supporting approtect.
- Cortex M4F MCU with 1MB flash, 256 KB RAM
- Supports NFC
- Integrated PCB trace range antenna. Bluetooth range is 1000 meters at 1Mbps and 2300 meters at 125 Kbps measured in environments with low RF and multiple path interferences.

- Size: 15x20.8x1.9mm.

BT840

- BT840: uses an nRF52840 QIAA
- BT840-p: uses an nRF52840 QIAA F or newer, supporting approtect.
- Cortex M4F MCU with 1MB flash, 256 KB RAM
- Supports NFC
- Integrated PCB trace range antenna.
- Size: 14x16x1.9mm.

BT840E

- BT840E: uses an nRF52840 QIAA
- BT840E-p: uses an nRF52840 QIAA F or newer, supporting approtect.
- Cortex M4F MCU with 1MB flash, 256 KB RAM
- Supports NFC
- An u.FL connector for external antenna. Certified with Fanstel ANT060 antenna.
- Maximum TX power is +14.6 dBm with ANT060 antenna.
- Size: 14x16x1.9mm.

BT840N and BT840NE use a Nordic nRF21540 power amplifier. A block diagram is below. Nine GPIO pins are used internally to control nRF21540. They are also available on the module. If you use GPIO pins to control nRF21540, don't use them for other purpose.

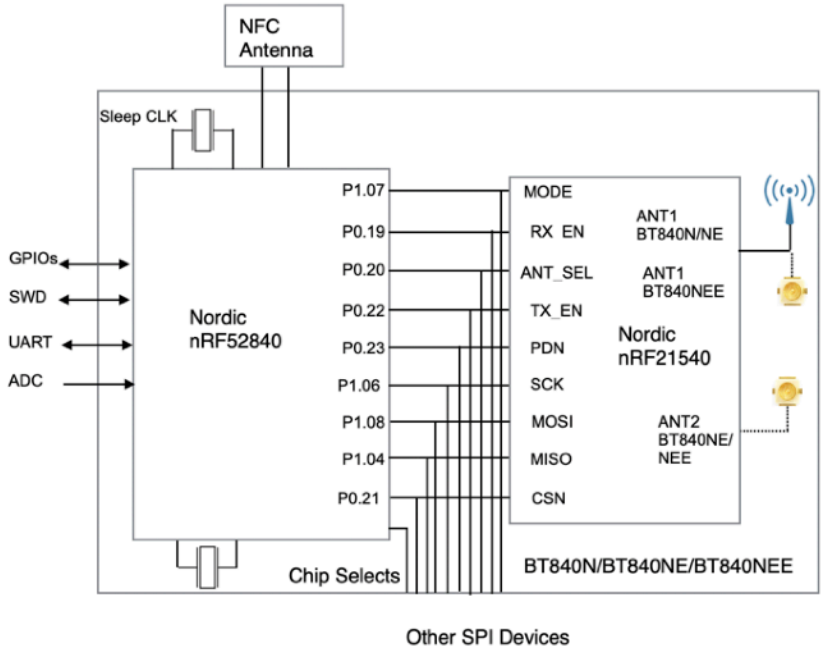

BT840N

- BT840N: uses an nRF52840 QIAA F or newer, supporting approtect.
- Cortex M4F MCU with 1MB flash, 256 KB RAM
- Supports NFC
- Integrated nRF21540 power amplifier
- Integrated 32.768 KHz sleep crystal
- Integrated PCB trace antenna
- Size: 15x29.9x1.9mm, the same as that of the BT40N.
- Photo to be updated.

BT840NE

- BT840NE: uses an nRF52840 QIAA F or newer, supporting approtect.
- Cortex M4F MCU with 1MB flash, 256 KB RAM
- Supports NFC
- Integrated nRF21540 power amplifier.
- Integrated 32.768 KHz sleep crystal.
- A PCB antenna and an u.FL connector for external antenna. FCC and ISED certified with Fanstel ANT060, a 6 dBi antenna.
- Size: 15x29.9x1.9mm, the same as that of the BT40NE.
- Photo to be updated.

2. Codes Development Using Nordic Tools

Development tools by Nordic and other third party development tools recommended by Nordic should be used.

Nordic development environment for nRF52840 offers a clean separation between application code development and embedded protocol stacks. This means compile, link and run time dependencies with the embedded stack and associated debugging challenges are removed. The Bluetooth low energy and ANT stack is a pre-compiled binary, leaving application code to be compiled stand-alone. The embedded stack interface uses an asynchronous and event driven model removing the need for RTOS frameworks.

Over-The-Air DFU

The nRF52840 is supported by an Over-The-Air Device Firmware Upgrade (OTA DFU) feature. This allows for in the field updates of application software and SoftDevice.

SoftDevices

The Nordic protocol stacks are known as SoftDevices and complement the nRF52 Series SoCs. All nRF52 Series are programmable with software stacks from Nordic. This bring maximum flexibility to application development and allows the latest stack version to be programmed into the SoC.

SoftDevices available from Nordic:
S140: Bluetooth low energy concurrent central/peripheral/observer/broadcaster stack.

Development Tools

Nordic Semiconductor provides a complete range of hardware and software development tools for the nRF52 Series devices. nRF52 DK board is recommended for firmware development.

Nordic software development tools can be downloaded from the following webpage.

http://infocenter.nordicsemi.com/index.jsp?topic=/com.nordic.infocenter.nrf52/dita/nrf52/development/nrf52_dev_kit.html&cp=1_1

3. Product Descriptions

Brief description of nRF52840 SoC is provided. For full description of the SoC, please download from Nordic Semiconductor website.

https://www.nordicsemi.com/eng/Products/Bluetooth-low-energy

Block Diagram of nRF52840

The following is a block diagram of Nordic nRF52840 Bluetooth Low Energy (BLE) SoC. Arrows with white heads indicate signals that share physical pins with other signals.

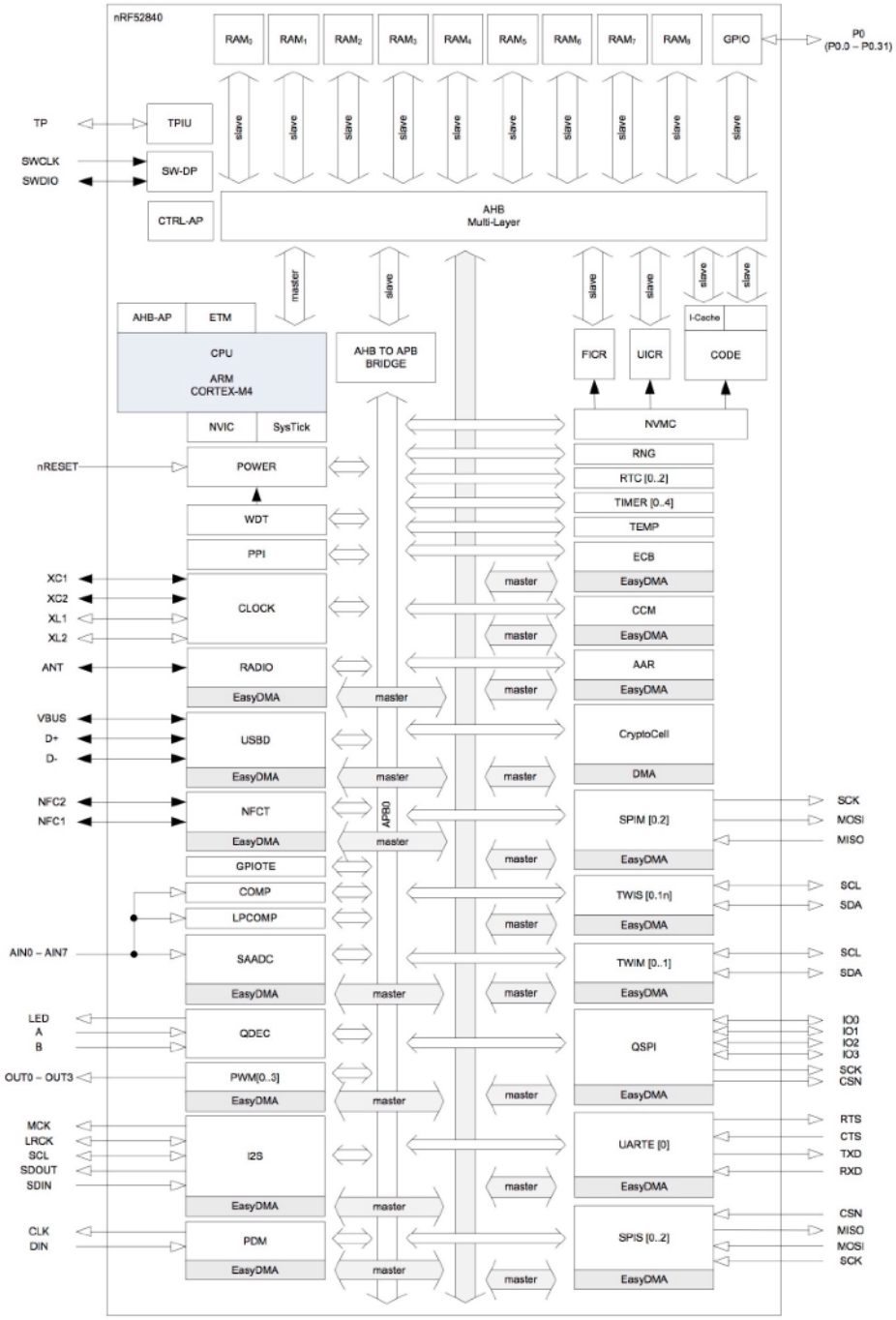

The 32 bit ARM Cortex M4F MCU with hardware supports for DSP instructions and floating point operations, code density and execution speed are higher than other Cortex M MCU. The Programmable Peripheral Interconnect (PPI) system provides a 20-channel bus for direct and autonomous system peripheral communication without CPU intervention. This brings predictable latency times for peripheral to peripheral interaction and power saving benefits associated with leaving CPU idle. The device has 2 global power modes ON/OFF, but all system blocks and peripherals have individual power management control which allows for an automatic switching RUN/IDLE for system blocks based only on those required/not required to achieve particular tasks.

The radio supports Bluetooth low energy and ANT. Output power is scalable from a maximum of +8dBm down to -20 dBm in 4dB steps. Sensitivity is increased to -96 dBm to -89 dBm, depending on data rate. Sensitivity for BLE is -96 dBm, and -92.5 dBm for ANT.

The NFC block supports NFC-A tags with proximity detection and Wake-on-field from low power mode. The NFC enables Out-Of-Band (OOB) Bluetooth pairing of devices and thus greatly simplifying deployment.

ARM Trustzone CryptoCell 310

ARM® TrustZone® CryptoCell-310 co-processor is a security subsystem which provides Root of Trust (RoT) and cryptographic services for a device. CryptoCell services are available to the application through a software library API, not a hardware register interface.

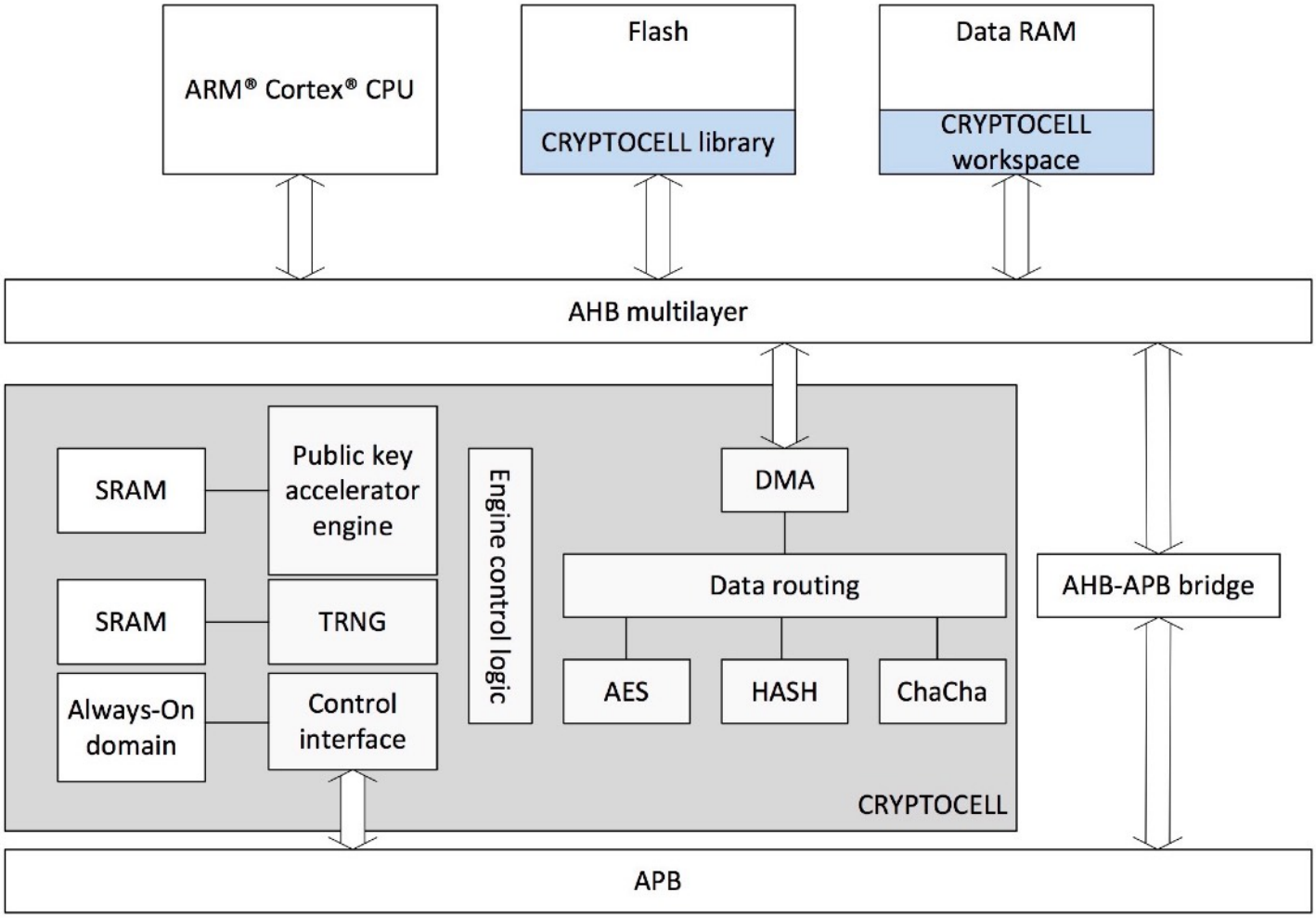

The following cryptographic features are provided.

- FIPS-140-2 certified True Random Number Generator (TRNG)
- RSA asymmetric encryption
  - Up to 2048 bit key size
  - PKCS#1 v2.1/v1.5
  - Optional CRT support
- Elliptic curve cryptography (ECC)
  - NIST FIPS 186-4 recommended curves using pseudo-random parameters, up to 521 bits:
    - Prime field: P-192, P-224, P-256, P-384, P-521
  - SEC 2 recommended curves using pseudo-random parameters, up to 521 bits:
    - Prime field: P-160, P-192, P-224, P-256, P-384, P-521
  - Koblitz curves using fixed parameters, up to 256 bits:
    - Prime field: P-160, P-192, P-224, P-256
  - Edwards/Montgomery curves:
    - Ed25519, Curve 25519
  - ECDH/ECDSA support
- Secure remote password protocol (SRP)
  - Up to 3072 bit operations
- Hashing functions
  - SHA-1, SHA-2 up to 256 bit size
  - keyed-hash message authentication code (HMAC)
- AES symmetric encryption
  - General purpose AES engine (encrypt/decrypt, sign/verify)
  - 128 bit key size
  - Supported encryption modes: ECB, CBC, CMAC/CBC-MAC, CTR, CCM/CCM*.
- ChaCha20/Poly1305 symmetric encryption
  - Supported keyed size: 128 and 256 bits
  - Authenticated encryption with associated data (AEAD) mode

Mechanical Drawings

The followings are mechanical drawings of BT840F and BT832F. The physical sizes of both are the same, 15x20.8x1.9mm. Except the 19 pins in solid black dots, BT840F and BT832F is hardware pin to pin compatible. Firmware configuration is required to perform the same function.

Two types of pins are available to meet different application requirements.

- 16 castellated pins for application needing limited number of IOs. SMT equipment is not required for soldering castellated pins.
- 45 LGA (Land Grid Array) pins to access all 48 GPIOs of nRF52840 when needed.

BT840F and BT832F Mechanical drawings, top view

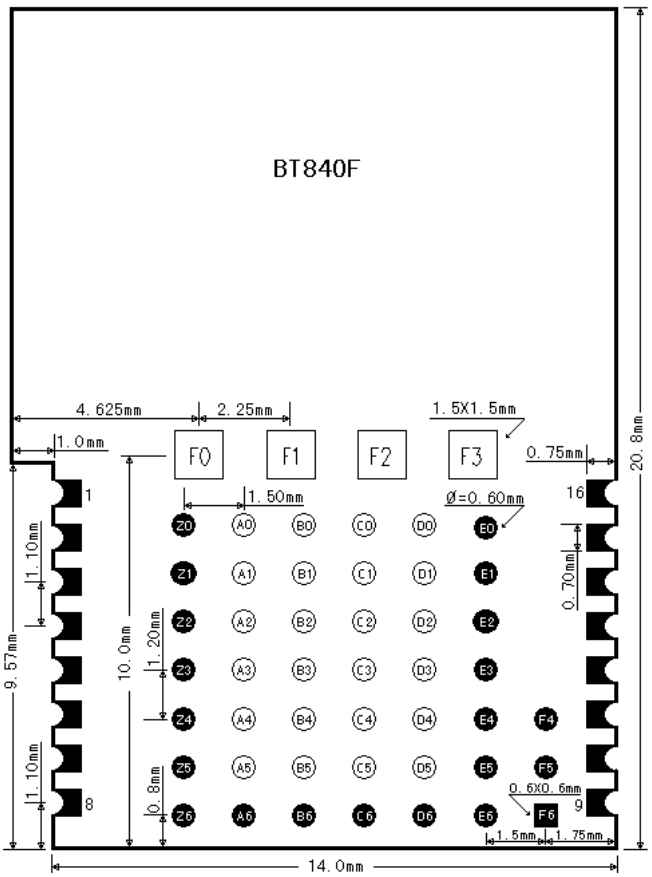

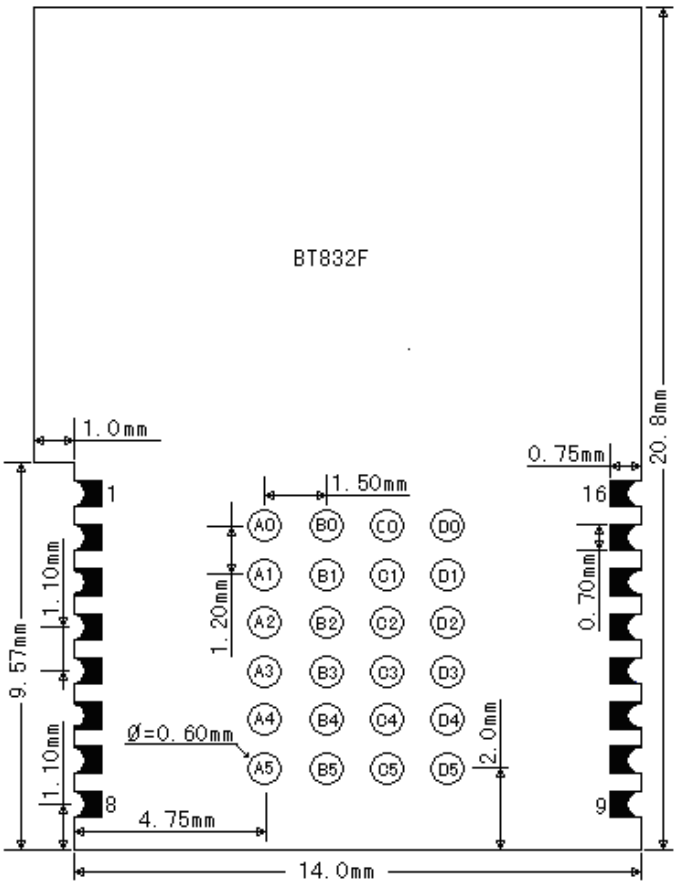

BT840 and BT840E mechanical drawings, top view.

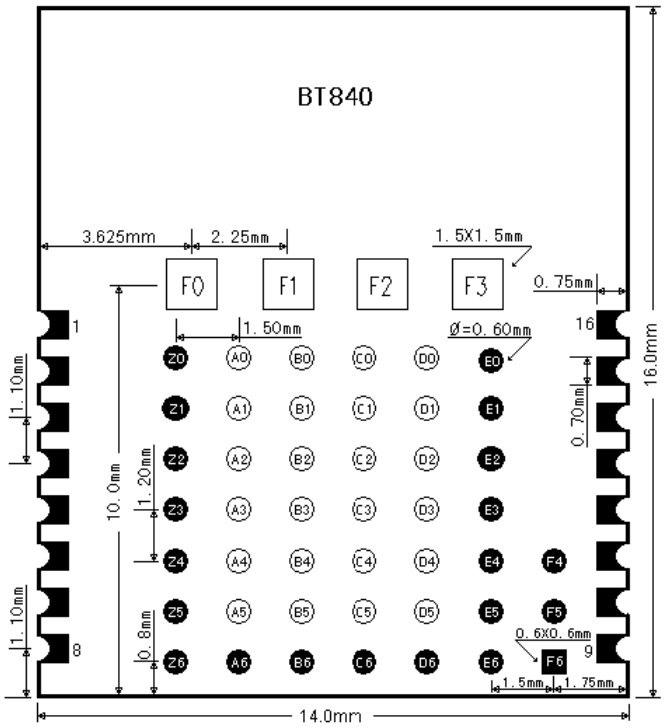

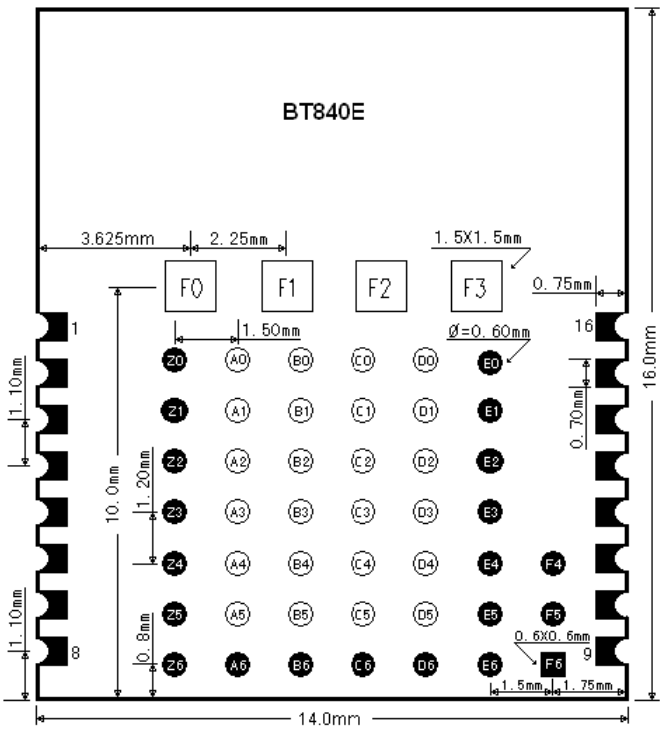

BT840N and BT840NE mechanical drawings, top view.

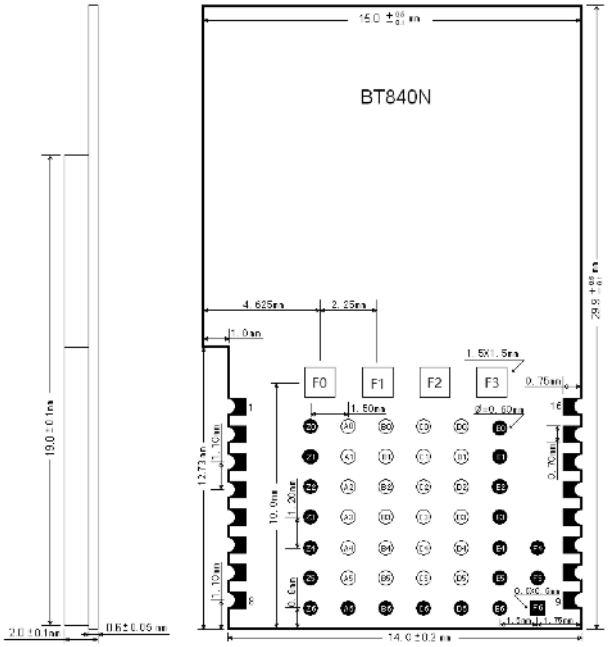

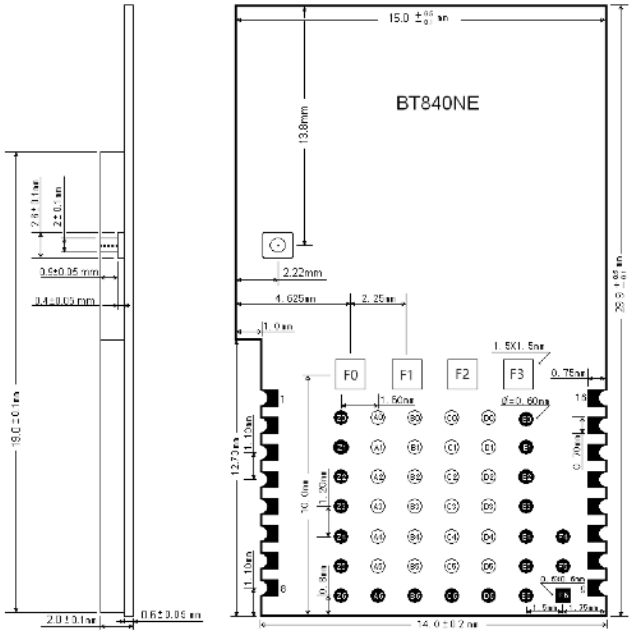

Pin Assignments of BT840

The followings are BT840 pin assignment. Pin functions are in a table in next section. Please refer to Nordic nRF52840 Product Specifications for detailed descriptions and features supported.

https://www.nordicsemi.com/eng/Products/nRF52840

BT840F pins is a super set of that of BT832F. A PCB developed for BT832 Series can be used for BT840 Series and vice versa.

BT832F pin assignments.

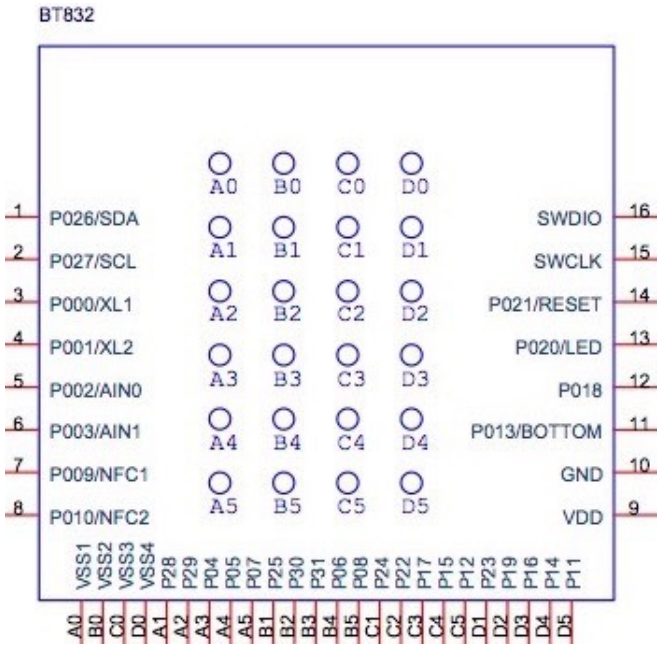

BT840F pin assignments

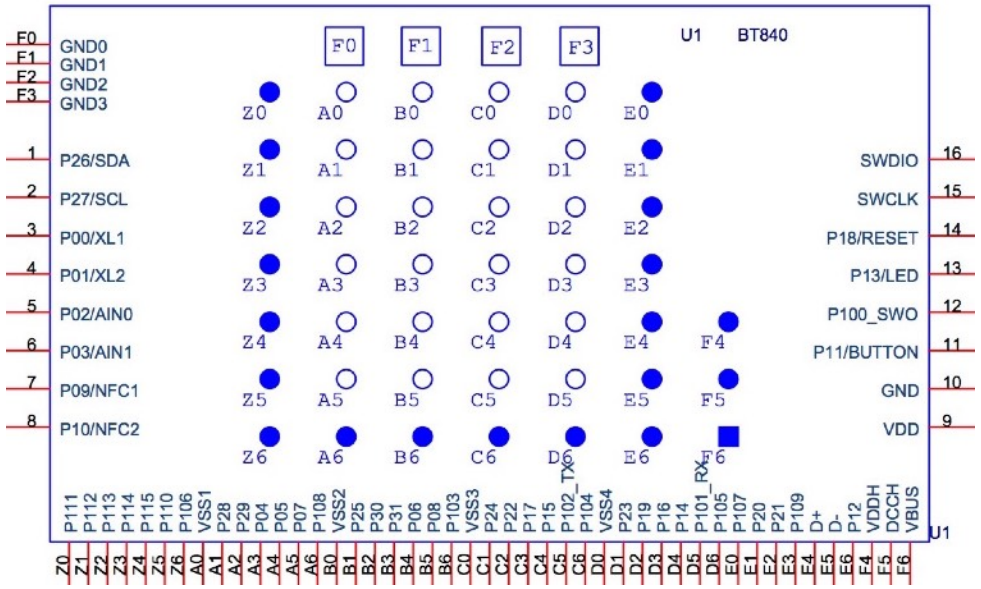

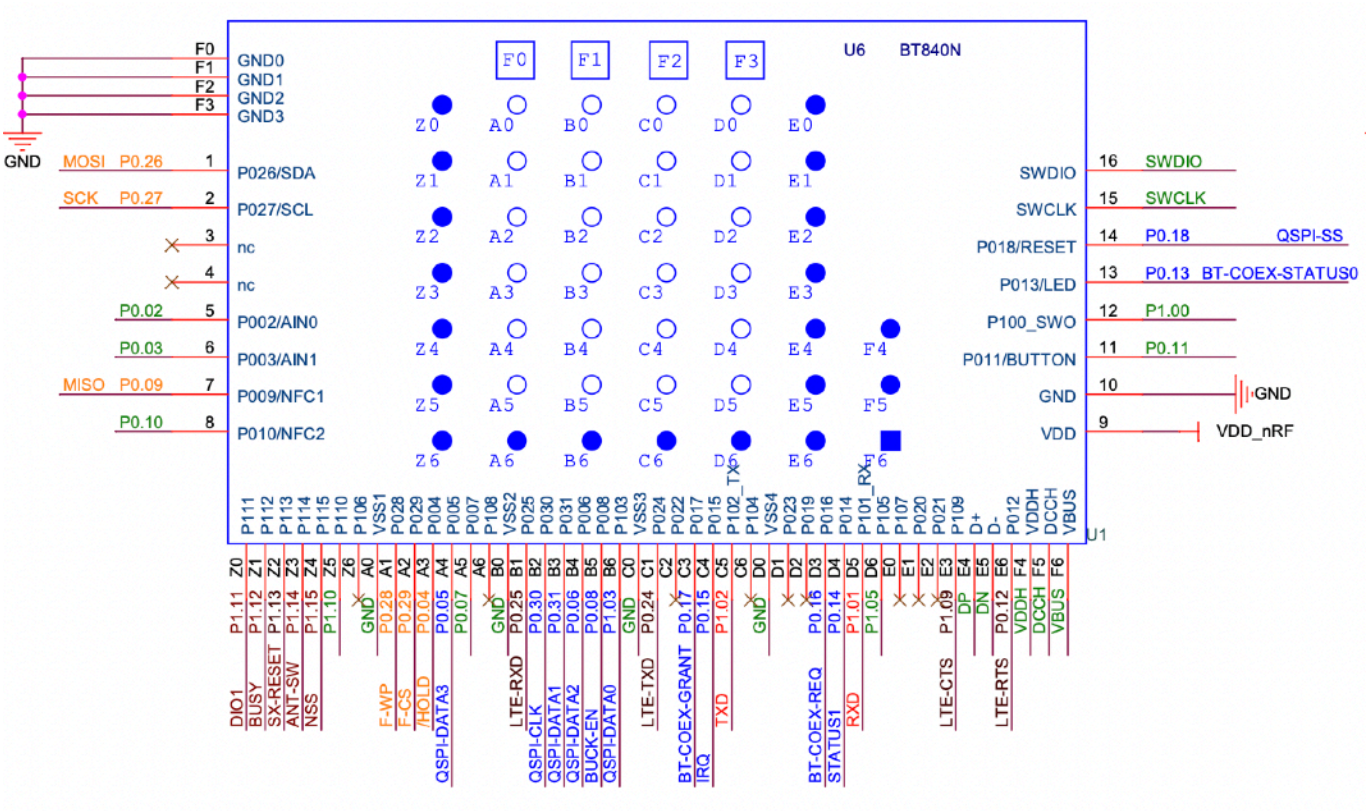

Pin Function

BT840N/NE uses 9 GPIO pins to control the power amplifier, nRF21540. These 9 pins in red color are also available for external connection. Please avoid possible signal conflict if you use them for other IO functions.

BT840/N	52840		BT832	52832		
pin#	pin#	pin name	pin#	pin#	pin name	Descriptions
1	G1	P0.26/SDA	1	38	P0.26	GPIO, configured as I2C SDA on EV-BT840
2	H2	P0.27/SCL	2	39	P0.27	GPIO, configured as I2C SCL on EV-BT840
3	D2	P0.00/XL1	3	2	P0.00/XL1	GPIO, connection for 32.768kHz crystal; NC for BT840N.
4	F2	P0.01/XL2	4	3	P0.01/XL2	GPIO, connection for 32.768kHz crystal; NC for BT840N.
5	A12	P0.02/AIN0	5	4	P0.02/AIN0	GPIO, Analog input
6	B13	P0.03/AIN1	6	5	P0.03/AIN1	GPIO, Analog input
7	L24	P0.09/NFC1	7	11	P0.09/NFC1	GPIO, NFC antenna connection
8	J24	P0.10/NFC2	8	12	P0.10/NFC2	GPIO, NFC antenna connection
9	B1	VDD	9	13	VDD	DC supply 1.7V to 3.6V
10	B7	GND	10	45	VSS	Ground
11	T2	P0.11	11	16	P0.13	GPIO
12	AD22	P1.00	12	21	P0.18	GPIO
13	AD8	P0.13	13	23	P0.20	GPIO
14	AC13	P0.18/RESET	14	24	P0.21/RESET	GPIO, internal RC reset circuit, configurable as RESET pin
15	AA24	SWDCLK	15	25	SWDCLK	Serial Wire Debug clock input
16	AC24	SWDIO	16	26	SWDIO	Serial Wire Debug I/O
Z0	B19	P1.11				GPIO
Z1	B17	P1.12				GPIO
Z2	A16	P1.13				GPIO
Z3	B15	P1.14				GPIO
Z4	A14	P1.15				GPIO
Z5	A20	P1.10				GPIO
Z6	R24	P1.06				GPIO; BT840N: Connected to nRF21540 SCK pin internally.
A0		GND	A0	45	VSS	Ground
A1	B11	P0.28/AIN4	A1	40	P0.28/AIN4	GPIO, Analog input
A2	A10	P0.29/AIN5	A2	41	P0.29/AIN5	GPIO, Analog input
A3	J1	P0.04/AIN2	A3	6	P0.04/AIN2	GPIO, Analog input
A4	K2	P0.05/AIN3	A4	7	P0.05/AIN3	GPIO, Analog input
A5	M2	P0.07	A5	9	P0.07	GPIO
A6	P2	P1.08				GPIO; BT840N: Connected to nRF21540 MOSI pin internally.
B0		GND	B0	45	VSS	Ground
B1	AC21	P0.25	B1	37	P0.25	GPIO
B2	B9	P0.30/AIN6	B2	42	P0.30	GPIO
B3	A8	P0.31/AIN7	B3	43	P0.31	GPIO
B4	L1	P0.06	B4	8	P0.06	GPIO, NC for BT840X, BT840XE, PA control
B5	N1	P0.08	B5	10	P0.08	GPIO, NC for BT840X, BT840XE, PA control
B6	V23	P1.03				GPIO
C0		GND	C0	45	VSS	Ground

C1	AD20	P0.24	C1	29	P0.24	GPIO
C2	AD18	P0.22	C2	27	P0.22	GPIO; BT840N: Connected to nRF21540 TX_EN pin internally.
C3	AD12	P0.17	C3	20	P0.17	GPIO, NC for BT840X,BT840XE, PA control
C4	AD10	P0.15	C4	18	P0.15	GPIO
C5	W24	P1.02	C5	15	P0.12	GPIO
C6	U24	P1.04				GPIO; BT840N: Connected to nRF21540 MISO pin internally.
D0		GND	D0	45	VSS	Ground
D1	AC19	P0.23	D1	28	P0.23	GPIO; BT840N: Connected to nRF21540 PDN pin internally.
D2	AC15	P0.19	D2	22	P0.19	GPIO; NC for BT840X and BT840XE, PA control; BT840N: Connected to nRF21540 RX_EN pin internally.
D3	AC11	P0.16	D3	19	P0.16	GPIO
D4	AC9	P0.14	D4	17	P0.14	GPIO
D5	Y23	P1.01	D5	14	P0.11	GPIO
D6	T23	P1.05				GPIO
E0	P23	P1.07				GPIO; BT840N: Connected to nRF21540 MODE pin internally.
E1	AD16	P0.20				GPIO; BT840N: Connected to nRF21540 ANT_SEL pin internally.
E2	AC17	P0.21				GPIO; BT840N: Connected to nRF21540 CSN pin internally.
E3	R1	P1.09				GPIO
E4	AD6	D+				USB D+
E5	AD4	D-				USB D-
E6	U1	P0.12				GPIO
F0						Ground pad
F1						Ground pad
F2						Ground pad
F3						Ground pad
F4	Y2	VDDH				High Voltage Power Supply. See Note 1.
F5	AB2	DCCH				DC to DC converter output
F6	AD2	VBUS				5V DC power for USB 3.3V regulator

Note 1: BT840N and BT840NE must be powered by an externally regulated DC supply to the VDD pin. To have FCC certified maximum TX power, the DC voltage shall be 3.3V, 300 mA minimum. If you apply DC power to the VDDH pin, the internally generated DC output is not enough for the power amplifier.

Mounting BT840F on the Host PCB

The following figure shows recommended mounting of BT840F module on the host PCB.

- For the best Bluetooth range performance, the antenna area of module shall extend 9.8 mm outside the edge of host PCB board, or 9.8 mm outside the edge of a ground plane.
- The next choice is to place a module on a corner of host PCB, the antenna area shall extend 9.8 mm from the edge of ground plane. Ground plane shall be at least 5 mm from the edge of the antenna area of module.
- We don't recommend mounting BT840F module in the middle of a host PCB.

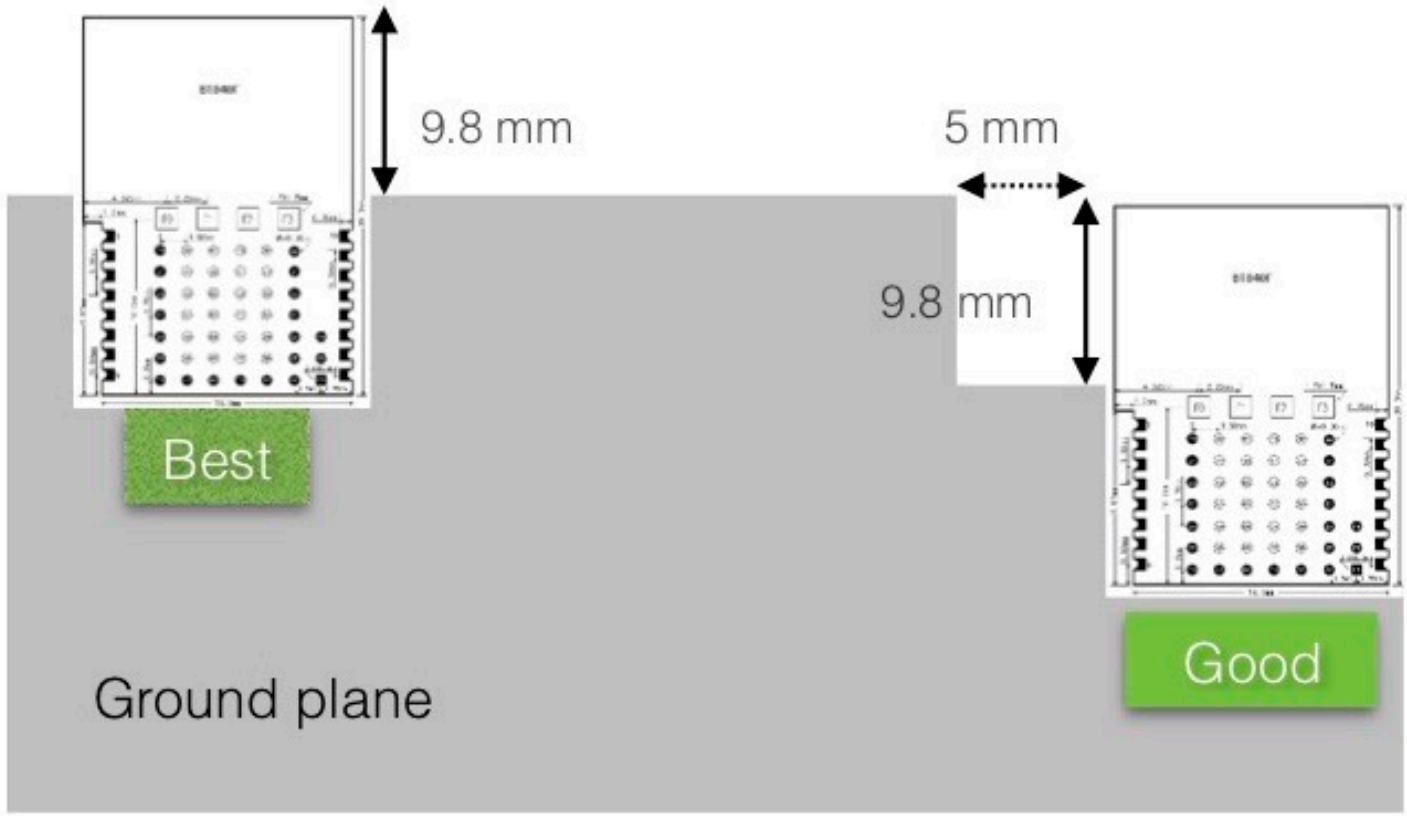

For the best Bluetooth range performance, keep all external metal at least 30mm from the antenna area.

Host Board Design for Low Cost or Long Range

On nRF52 series SoCs, Nordic offers various memory options and protocol supports. Fanstel offers various antenna and power amplifier options. A host board can be designed to accommodate these nRF52 modules. Our suggestions for host PCB design:

If your main goal is minimum PCB cost,

- use a 2-sided PCB.
- Use library component from EV BT832 Gerber files, can be downloaded from http://www.fanstel.com/download-document/. It has 16 castellated pins plus 24 LGA pins. BT840F library component can be used. However, signal routing can be difficult on a 2-sided PCB.
- Be sure of no metal contact in the area of 21 additional BT840F pins.
- BT840F can be mounted on a BT832 pad.

If you main goal is maximum wireless range,

- use a 4 or more layers PCB.
- Use library component from EV BT840F V4 or newer Gerber files, can be downloaded from http://www.fanstel.com/download-document/. It has 16 castellated pins plus 45 LGA pins.
- As much ground plane under BT840F, on top side of host PCB as possible. Use EV BT840F V4 Gerber files as an example.
- If your products may need wireless range of 1350 meters or more, allocate physical space for a 15x29.9x1.9mm module. This larger module size is required to accommodate Nordic nRF21540 power amplifier.
- Don’t use these 9 pins with description in red color in PIN Function. They are used to control nRF21540 inside BT840N and BT840NE.

Control nRF21540 Power Amplifier

BT840N uses Nordic nRF21540 power amplifier. The connection diagram with control signal pins is below.

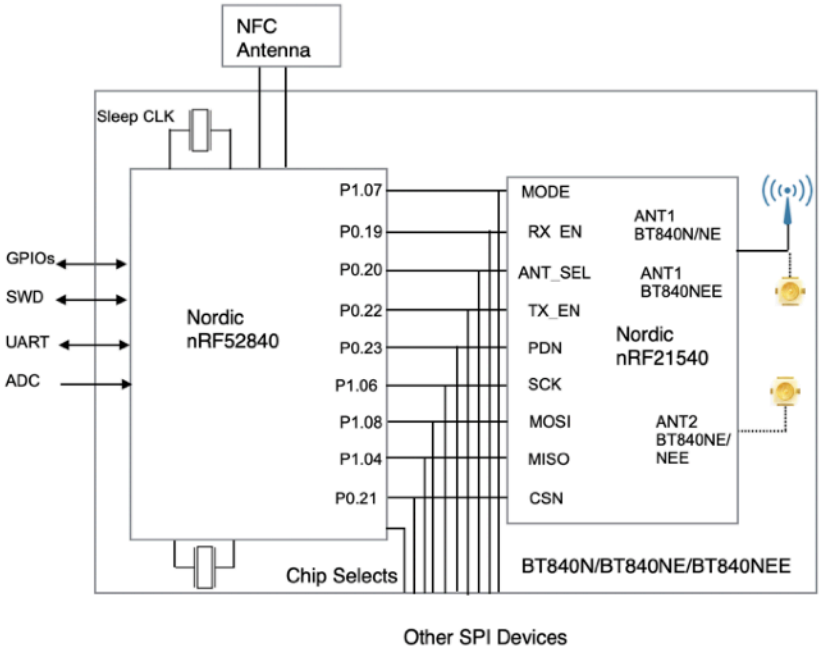

A firmware example to control nRF21540 power amplifier is below. This firmware file can be downloaded from http://www.fanstel.com/download-document/.

You can set nRF52840 TX power to up to + 8 dBm. The conditions for passing BT840N and BT840NE certification testings for both Bluetooth and 802.15.4:

- FCC and ISED: Set nRF52840 TX to +6 dBm and use Fanstel antenna ANT060 with BT840NE.
- CE, RCM, and TELEC: Set nRF52840 TX to -8 dBm and use Fanstel antenna ANT000 for BT840NE.

Codes for Controlling nRF21540

Regarding Central_UART

Central_UART using NCS SDK 2.4.0.

Board Configure：nrf52840dk_nrf52840

Configuration：prj.conf

Extra CMake arguments：-DSHIELD=nrf21540_ek

```
#-----------------------------------------------------------------------------------------
// Add the following configuration to nrf52840dk_nrf52840.overlay.
// Add the following configuration to app.overlay.
/ {
    aliases {
            nrf21540-spi = &spi3;
    };
};

/{
```

```
nrf_radio_fem: nrf21540_fem {
   compatible = "nordic,nrf21540-fem";
   tx-en-gpios = <&gpio0 22 GPIO_ACTIVE_HIGH>;
   rx-en-gpios = <&gpio0 19 GPIO_ACTIVE_HIGH>;
   pdn-gpios = <&gpio0 23 GPIO_ACTIVE_HIGH>;
   //ant-sel-gpios = <&gpio0 20 GPIO_ACTIVE_HIGH>;
   mode-gpios = <&gpio1 7 GPIO_ACTIVE_HIGH>;
   spi-if = <&nrf_radio_fem_spi>;
   supply-voltage-mv = <3000>;
   };
};

fem_spi: &spi3 {
   status = "okay";
   pinctrl-0 = <&spi3_default_alt>;
   pinctrl-1 = <&spi3_sleep_alt>;
   pinctrl-names = "default", "sleep";
   cs-gpios = <&gpio0 21 GPIO_ACTIVE_LOW>;

   nrf_radio_fem_spi: nrf21540_fem_spi@0 {
         compatible = "nordic,nrf21540-fem-spi";
         status = "okay";
         reg = <0>;
         spi-max-frequency = <8000000>;
   };
};

&pinctrl {
   uart0_default: uart0_default {
      group1 {
         psels = <NRF_PSEL(UART_TX, 1, 2)>;
      };
      group2 {
         psels = <NRF_PSEL(UART_RX, 1, 1)>;
         bias-pull-up;
      };
   };

   uart0_sleep: uart0_sleep {
      group1 {
         psels = <NRF_PSEL(UART_TX, 1, 2)>,
            <NRF_PSEL(UART_RX, 1, 1)>;
         low-power-enable;
      };
   };

   spi3_default_alt: spi0_default_alt {
      group1 {
         psels = <NRF_PSEL(SPIM_SCK, 1, 6)>,
            <NRF_PSEL(SPIM_MOSI, 1, 8)>,
            <NRF_PSEL(SPIM_MISO, 1, 4)>;
      };
```

```
    };

    spi3_sleep_alt: spi0_sleep_alt {
        group1 {
            psels = <NRF_PSEL(SPIM_SCK, 1, 6)>,
                <NRF_PSEL(SPIM_MOSI, 1, 8)>,
                <NRF_PSEL(SPIM_MISO, 1, 4)>;
            low-power-enable;
        };
    };
};

&qspi {
    status = "disabled";
};
&uart1 {
    status = "disabled";
};

 &uart0 {
    status = "okay";
    current-speed = <115200>;
    pinctrl-0 = <&uart0_default>;
    pinctrl-1 = <&uart0_sleep>;
    pinctrl-names = "default", "sleep";
};

/ {
    chosen {
        nordic,nus-uart = &uart0;
    };
};

#-----------------------------------------------------------------------------------------
// Add the following configuration to prj.conf.
. . . . .
CONFIG_MPSL=y
CONFIG_MPSL_FEM=y
CONFIG_MPSL_FEM_NRF21540_GPIO=y
CONFIG_MPSL_FEM_NRF21540_GPIO_SPI=n
CONFIG_MPSL_FEM_NRF21540_TX_GAIN_DB=10
CONFIG_MPSL_FEM_NRF21540_TX_GAIN_DB_POUTA=10
CONFIG_MPSL_FEM_NRF21540_TX_GAIN_DB_POUTB=10
CONFIG_BT_CTLR_TX_PWR_ANTENNA=17
```

4. Bluetooth Range

Settings for Certification Testings

Settings for BT840, BT840F, and BT840E:

- nRF52840 SoC TX power is set to +8dBm for FCC, ISED, CE, RCM, and TELEC certification testings.
- BT840E passes FCC and ISED certification testings with ANT060, a 6 dBi antenna.
- BT840E passes CE and RCM certification testings with ANT000 antenna.
- VDD is set to 3.3V with DCDC converter enabled.

Settings for BT840N and BT840NE:

- nRF52840 SoC TX is set to +6dBm for FCC and ISED testings.
- nRF52840 SoC TX is set to -8 dBm for CE, RCM, and TELEC testings.
- BT840NE passes CE, RCM, and TELEC certification testings with ANT000, a 0 dBi antenna.
- BT840NE passes FCC and ISED certification testings with ANT060, a 6 dBi antenna.
- VDD is set to 3.3V.

Bluetooth ranges are measured with settings for FCC certification testings.

Bluetooth Range Measurements

Bluetooth range measurement reports and hex codes used in measurements can be downloaded from **Bluetooth Range Measurements** section of this webpage. Settings for passing FCC certification testing is used.

http://www.fanstel.com/download-document/

Bluetooth ranges are measured between 2 modules on evaluation boards for various height of antenna. On the first measurement, both antennas are pointing to sky and facing each other. The second antenna is rotated by 30 degrees clockwise after each measurement.

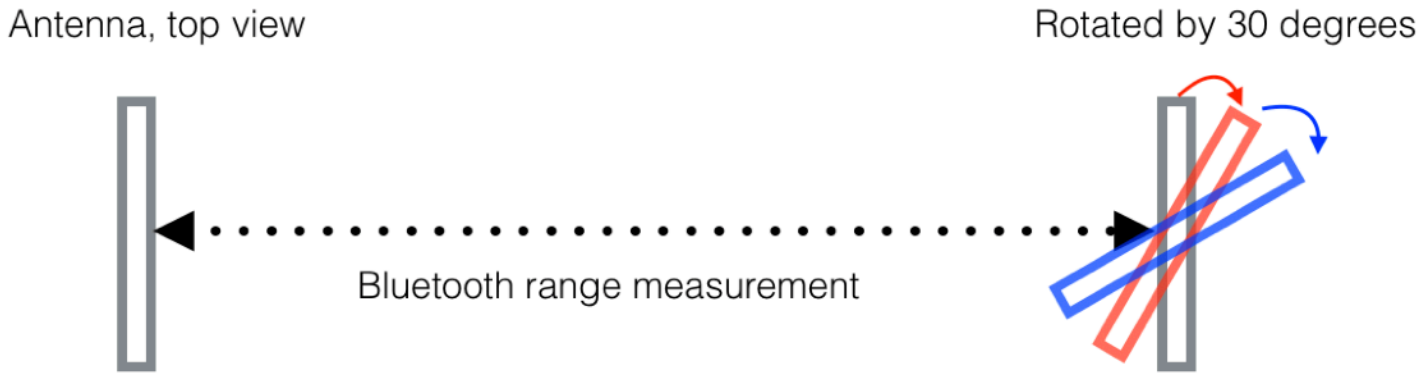

Bluetooth range is specified as the average of 12 measurements with the least significant digit truncated.

- 1.52 meters (60 inches) is typical height of thermostat in the USA.

- 0.55 meter (21.5 inches) is typical height of antenna if an IoT device is plugged into a wall AC outlet in the USA. When USB840F USB dongle is plugged into a smart phone charger plugging into a wall AC outlet to collect Bluetooth sensor data or to be used as a Bluetooth signal repeater.
- Low Multiple Path Interference (**LMPI**). For longer range measurement, antenna must be higher to have LMPI. To have LMPI, 60% clearance is required. For example, if transmitter and receiver is 1000 meters away, both antennas must be 3.33 meters above ground and away from any obstruction.

Distance, m	2400MHz	10	50	100	200	400	600	1000	1500	2000	3000	5000	10000
Fresnel Zone radius, m		0.55	1.24	1.75	2.48	3.51	4.29	5.54	6.79	7.84	9.60	12.40	17.53
80% clearance, m		0.44	0.99	1.40	1.98	2.81	3.44	4.44	5.43	6.27	7.68	9.92	14.03
60% clearance, m		0.33	0.74	1.05	1.49	2.10	2.58	3.33	4.07	4.70	5.76	7.44	10.52

The followings are Bluetooth range measurement results.

Antenna height	LMPI	1.52 meters	0.55 meter
BT840F Bluetooth range, 125Kbps	2300 meters	640 meters	210 meters
BT840F Bluetooth range, 1Mbps	1000 meters	390 meters	140 meters
BT840 Bluetooth range, 125 Kbps	320 meters	210 meters	
BT840 Bluetooth range, 1Mbps	150 meters	120 meters	
BT840N Bluetooth range, 1Mbps	1170 meters		

Recommendation for Long Range Applications

The followings are certification test result summaries of long range nRF52840 modules. Antenna gain is added to TX power measured by FCC test labs. FCC test labs measure the maximum transmission power of all frequencies to make sure none exceeds FCC regulation.

BT840F Bluetooth range is the average of 12 measurements. BT840N, BT840NE, and BT840E are verified at ranges indicated. Theoretical ranges are longer. We can not verify because of test site limitation.

module	BT840F	BT840	BT840E	BT840N	BT840NE
BT Antenna	PCB trace	PCB trace	ANT060	PCB trace + PA	PA+ANT060
Max TX FCC, ISED	+8.8 dBm	+6.7 dBm	+14.4 dBm	+22.6 dBm	+27.0 dBm
BT range,1 Mbps (FCC TX)		1000 meters		1170 meters	>1170 meters
BT range, 125 Kbps(FCC TX)	3000M, est.	2300 meters	>3400M, est.	>4500 meters	>4500 meters
FCC ID	X8WBT840F	X8WBT840	X8WBT840F	X8WBT840N	X8WBT840N
CE	Compliant	Compliant	Compliant	Compliant	Compliant
RCM	Compliant	Compliant	Compliant	Compliant	Compliant
TELEC	201-190710/00	201-190710/00	201-190710/00		

BT840XE Maximum Link Budget Calculation

BT840XE is FCC and ISED certified with ANT060, a 6 dBi antenna. Using the following specifications:

- nRF52840 receiver sensitivity is -95 dBm at 1Mbps per Nordic product specifications.
- nRF52840 receiver sensitivity is -103 dBm at 125 Kbps per Nordic product specifications.
- SKY66112 receiver gain is measured at 1.5 dB by Fanstel. The receiver gain is 11 dB per Skyworks data sheets. Fanstel measures the increase in Bluetooth range in the Arizona desert without and with SKY66112. We assume nRF21540 has the same receiver 1.5 dB receiver gain as SKY66112.
- BT840NE Max TX power is +20.6 dBm per FCC test report.
- Maximum gain of ANT060 is 6 dBi per antenna manufacturer.

The link budget between two BT840NE.

- Up to 129 dB at 1Mbps.
- Up to 137 dB at 125 Kbps.

5. AT Commands

AT command codes are used in production testing. They are not erased before shipping. If you develop your own codes, please do ***chiperase*** and reprogram with your codes.

User manual and the newest AT Commands hex codes can be downloaded from **AT Command Hex Codes, Bluetooth 5** section of this web page.

http://www.fanstel.com/download-document/

AT commands can be used on UART interface and SPI interface. The preloaded codes use UART interface.

6. BT840F Evaluation Board

An evaluation board consists of the followings:

- Mini USB cable
- Evaluation board
- 10-conductor cable for connection to Nordic nRF52 DK (DK is not included)

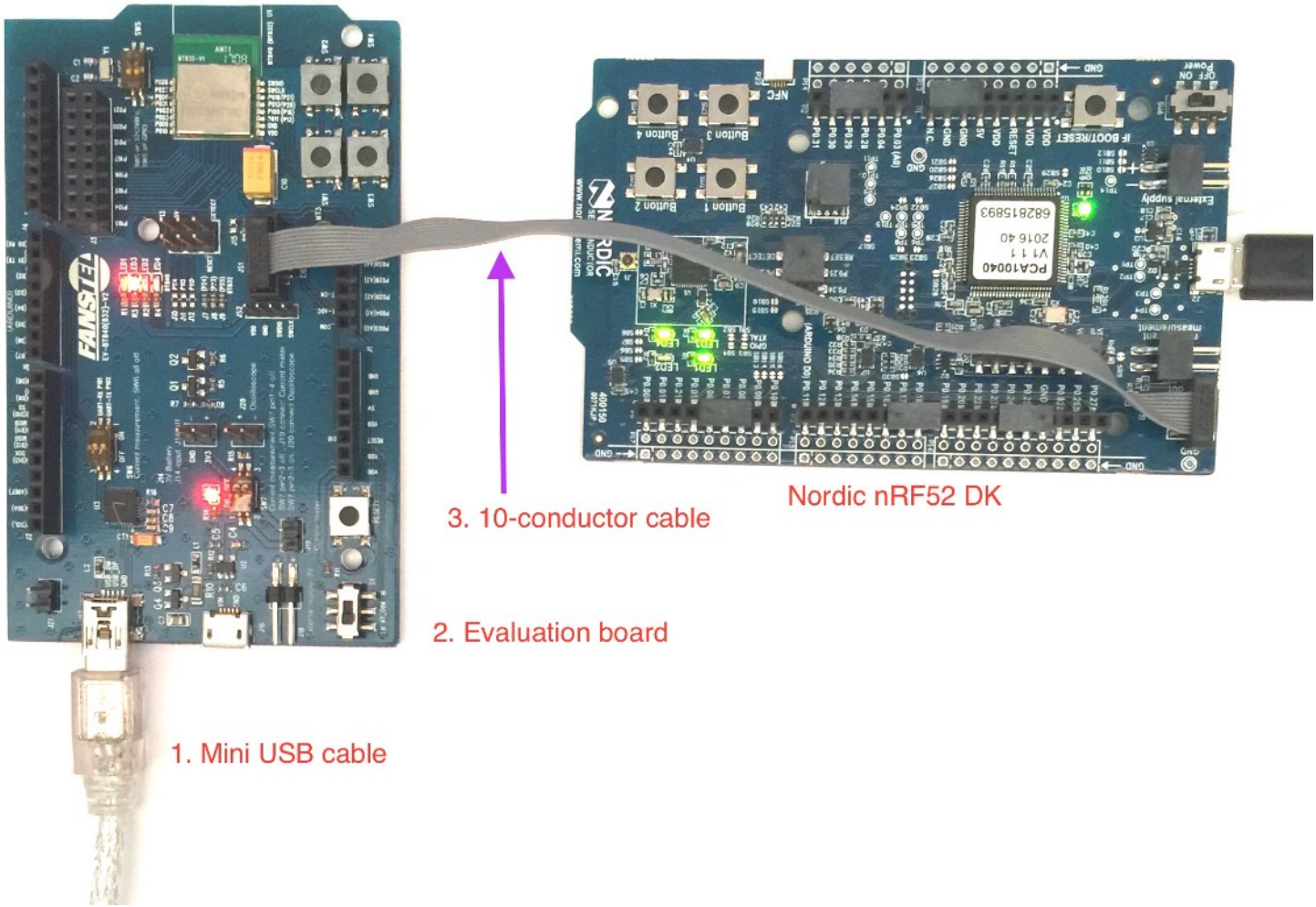

Nordic Development Tools

A Nordic nRF52 DK is recommended for programming this evaluation board. Nordic development tools can be downloaded from:

https://www.nordicsemi.com/eng/Products/nRF52840

Many application examples can be downloaded from Nordic website.

Some firmware, Android OS, and iOS app codes can be downloaded from **Bluetooth 5 Codes section** of this Fanstel webpage.

http://www.fanstel.com/download-document/

BT840 firmware can be used in all nRF52840 modules, e.g., BT840, BT840F, and BT840E.

Android OS Apps

The following Android OS apps are available for download from Google Play Store:
BlueNor nrf5x: to use with Bluetooth 5 stacks, AT commands, or Slave firmware. Master firmware does not connect to a smartphone. Source codes can be downloaded from http://www.fanstel.com/download-document/

BlueNor Mesh: to use with BlueNor mesh firmware to send command to any node in a mesh. Node number is displayed when acknowledgement is received. Source codes will be uploaded to Fanstel website when supporting Bluetooth 5.

iOS Apps

The following iOS apps can be downloaded from Apple APP Store.

BlueNor Mesh: to use with BlueNor mesh firmware to send command to any node in a mesh. Node number is displayed when acknowledgement is received.
BlueNor nrf5x firmware, apps, and source codes will be uploaded when ready.

BT840F V4 EvaluationBoard Schematics

Evaluation board schematics and Gerber files can be downloaded from

http://www.fanstel.com/download-document/

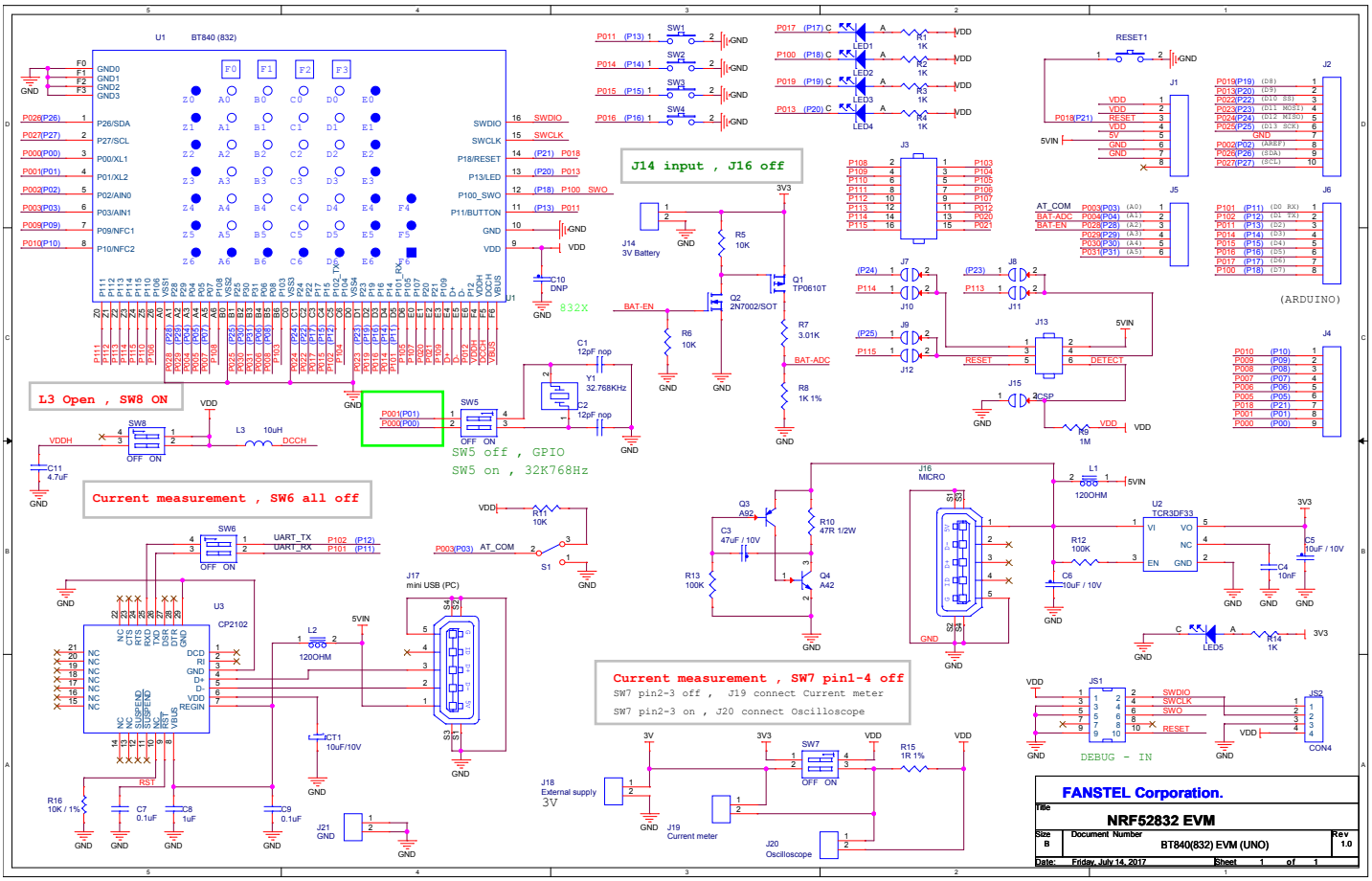

Evaluation board can be used as a reference design for using modules. EV BT840F V4 is designed for the BT840F soldering pads with 61 pins. These 21 pins in solid dark color are for BT840F.

EV BT840F V4 evaluation board is developed for BT840F and BT832X. It can be used for BT832 and BT832F. Pins in solid color are used only for BT840F. Blue color pin names around U1 BT840(832) are for BT832/ BT832F/BT832X. Red color pin names are for BT840F/BT840/BT840E. Firmware pin configuration is required for a host board to accommodate BT840F/BT840/BT840E and BT832/BT832F/BT832X.

Additional feature enhancements for version V4 evaluation board:

1. It has the same foot print as Arduino Uno R3. Additional connectors are added for connection to extra GPIO pins of BlueNor modules.

2. EV BT840F is not an UNO R3 compatible board. You can use Nordic develop tools to develop firmware for many UNO R3 compatible shields.

3. Portable smartphone charger can be used to power this board. The circuitry to the left of micro USB connector, J16 produces periodic load to prevent portable smartphone charger from shutting down.

Suggestion for Battery Power Application

Standby current consumption is important for battery-powered product. We suggest adding a 32.768 kHz crystal and 2 capacitors on host board. The 32MHz main clock won't be active at idle state to save power.

Two inductors required for on-board DC to DC converter are inside BT840F. You can enable DCDC converter to have lower power consumption.

7. Miscellaneous

Soldering Temperature-Time Profile for Re-Flow Soldering

Maximum number of cycles for re-flow is 2. No opposite side re-flow is allowed due to module weight.

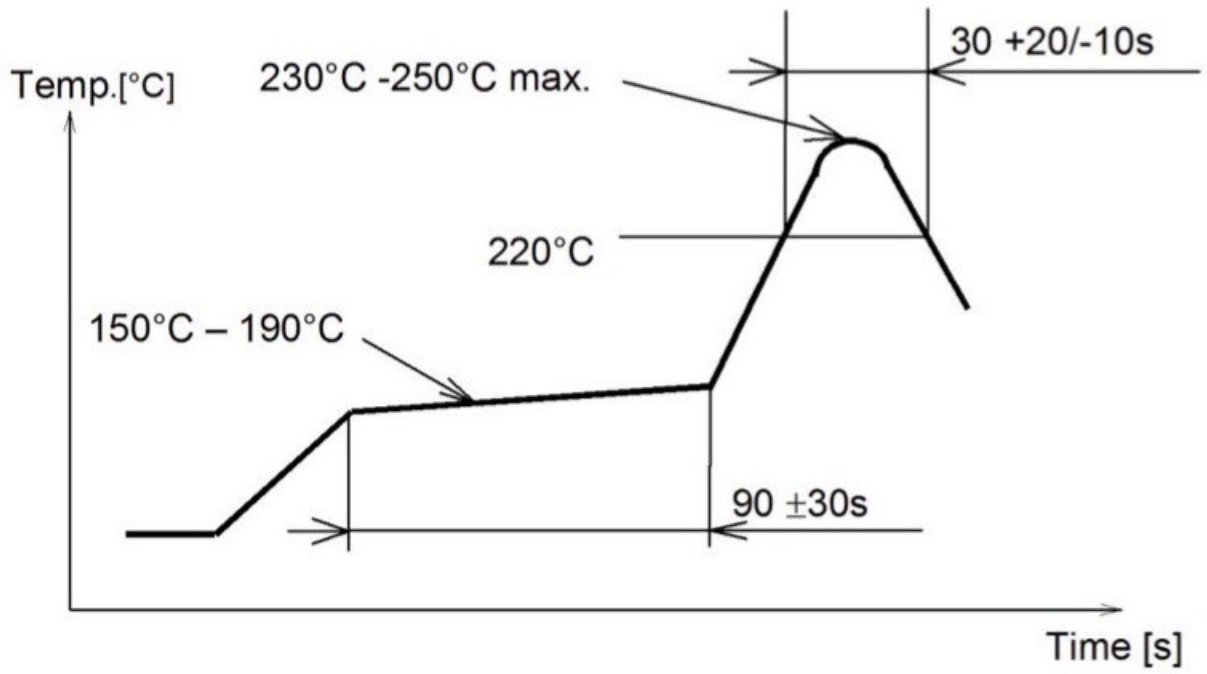

Cautions, Design Notes, and Installation Notes

Failure to follow the guidelines set forth in this document may result in degrading of the product's functions and damage to the product.

Design Notes

(1) Follow the conditions written in this specification, especially the control signals of this module.

(2) The supply voltage has to be free of AC ripple voltage (for example from a battery or a low noise regulator output). For noisy supply voltages, provide a decoupling circuit (for example a ferrite in series connection and a bypass capacitor to ground of at least 47uF directly at the module).

(3) This product should not be mechanically stressed when installed.

(4) Keep this product away from heat. Heat is the major cause of decreasing the life of these products.

(5) Avoid assembly and use of the target equipment in conditions where the products' temperature may exceed the maximum tolerance.

(6) The supply voltage should not be exceedingly high or reversed. It should not carry noise and/or spikes.

(7) this product away from other high frequency circuits.

Notes on Antenna and PCB Layout

(1) Don't use a module with internal antenna inside a metal case.

(2) For PCB layout:

- Avoid running any signal line below module whenever possible,
- No ground plane below antenna,
- If possible, cut-off the portion of main board PCB below antenna.

Installation Notes

(1) Reflow soldering is possible twice based on the time-temperature profile in this data sheets. Set up the temperature at the soldering portion of this product according to this reflow profile.

(2) Carefully position the products so that their heat will not burn into printed circuit boards or affect the other components that are susceptible to heat.

(3) Carefully locate these products so that their temperatures will not increase due to the effects of heat generated by neighboring components.

(4) If a vinyl-covered wire comes into contact with the products, then the cover will melt and generate toxic gas, damaging the insulation. Never allow contact between the cover and these products to occur.

(5) This product should not be mechanically stressed or vibrated when reflowed.

(6) If you want to repair your board by hand soldering, please keep the conditions of this chapter.

(7) Do not wash this product.

(8) Refer to the recommended pattern when designing a board.

(9) Pressing on parts of the metal cover or fastening objects to the metal will cause damage to the unit.

Usage Condition Notes

(1) Take measures to protect the unit against static electricity. If pulses or other transient loads (a large load applied in a short time) are applied to the products, check and evaluate their operation before assembly on the final products.

(2) Do not use dropped products.

(3) Do not touch, damage or soil the pins.

(4) Follow the recommended condition ratings about the power supply applied to this product.

(5) Electrode peeling strength: Do not add pressure of more than 4.9N when soldered on PCB

(6) Pressing on parts of the metal cover or fastening objects to the metal cover will cause damage.

(7) These products are intended for general purpose and standard use in general electronic equipment, such as home appliances, office equipment, information and communication equipment.

Storage Notes

(1)The module should not be stressed mechanically during storage.

(2)Do not store these products in the following conditions or the performance characteristics of the product, such as RF performance will be adversely affected:

- Storage in salty air or in an environment with a high concentration of corrosive gas.
- Storage in direct sunlight
- Storage in an environment where the temperature may be outside the range specified.
- Storage of the products for more than one year after the date of delivery storage period.

(3) Keep this product away from water, poisonous gas and corrosive gas.

(4) This product should not be stressed or shocked when transported.

(5) Follow the specification when stacking packed crates (max. 10).

Safety Conditions

These specifications are intended to preserve the quality assurance of products and individual components. Before use, check and evaluate the operation when mounted on your products. Abide by these specifications, without deviation when using the products. These products may short-circuit. If electrical shocks, smoke, fire, and/or accidents involving human life are anticipated when a short circuit occurs, then provide the following failsafe functions, as a minimum.

(1)Ensure the safety of the whole system by installing a protection circuit and a protection device.

(2)Ensure the safety of the whole system by installing a redundant circuit or another system to prevent a dual fault causing an unsafe status.

Other Cautions

(1)This specification sheet is copyrighted. Reproduction of this data sheets is permissible only if reproduction is without alteration and is accompanied by all associated warranties, conditions, limitations, and notices.

(2)Do not use the products for other purposes than those listed.

(3)Be sure to provide an appropriate failsafe function on your product to prevent an additional damage that may be caused by the abnormal function or the failure of the product.

(4)This product has been manufactured without any ozone chemical controlled under the Montreal Protocol.

(5)These products are not intended for other uses, other than under the special conditions shown below. Before using these products under such special conditions, check their performance and reliability under the said special conditions carefully to determine whether or not they can be used in such a manner.

- In liquid, such as water, salt water, oil, alkali, or organic solvent, or in places where liquid may splash.

- In direct sunlight, outdoors, or in a dusty environment
- In an environment where condensation occurs.
- In an environment with a high concentration of harmful gas.

(6) If an abnormal voltage is applied due to a problem occurring in other components or circuits, replace these products with new products because they may not be able to provide normal performance even if their electronic characteristics and appearances appear satisfactory.

(7) When you have any question or uncertainty, contact Fanstel.

Packaging and Lot Number

Production modules are delivered in reel, 1000 modules in each reel. Lot number for modules made after May 2019, can be used to track silicon version of SoC, module PCB version, and production test code version.

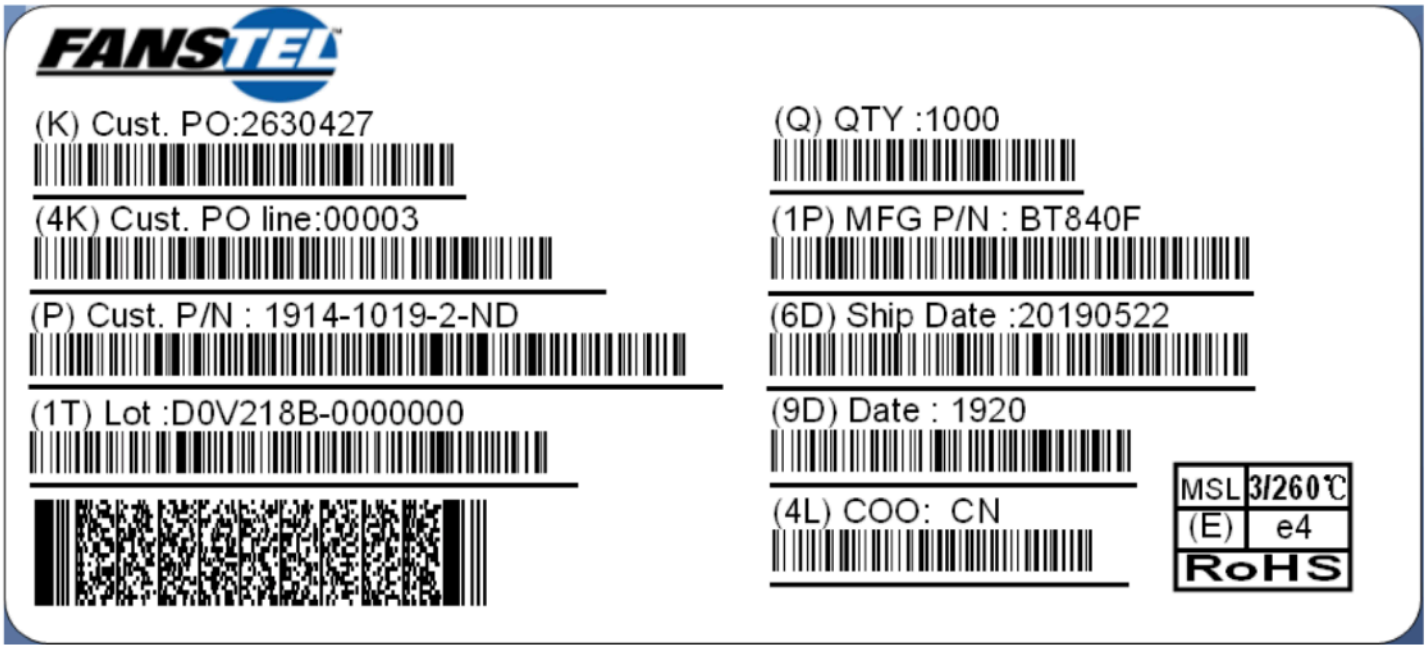

Lot: **D0 V2 18B - 00 00 000**

D0: 2 digits, version number of SoC.
V2: 2 digits, version number of module PCB.
18B: the first 2 digits for production test codes released year and the last digit for month in hex format. A=October, B=November, C=December. 18B was released in November 2018.
00 00 000, 7 digits, reserved for 2nd SoC for modules with 2 SoCs.

FCC Label

The Original Equipment Manufacturer (OEM) must ensure that the OEM modular transmitter must be labeled with its own FCC ID number. This includes a clearly visible label on the outside of the final product enclosure that displays the contents shown below. If the FCC ID is not visible when the equipment is installed inside another device, then the outside of the device into which the equipment is installed must also display a label referring to the enclosed equipment

The end product with this module may subject to perform FCC part 15 unintentional emission test requirement and be properly authorized.

This device is intended for OEM integrator only.

Revision History

- May 2018, Ver. 1.00: Initial release
- August 2018, Version 1.10: Add BT840X and BT840XE with update. Add BT840F and BT840 range measurement results. Remove AT commands and refer to external document.
- May 2019, Version 1.11: Add BT840X and BT840XE certifications, amplifier control codes, Bluetooth range.
- Sep. 2019, Version 1.12: Add BT840X/E photos, BT840F certifications for Bluetooth and 802.15.4.
- Dec. 2019, Version 1.16: Add maximum TX power for FCC X8WBT840F certification.
- Feb. 2020, Version 1.17: Add information to Section 4 Bluetooth Range.
- Feb. 2021, Version 1.18: Add note for BT840X/XE, VDDH pin.
- June 2021, Version 1.19: Update BT840X, BT840XE photos
- Jan. 2022, Version 1.20: Add Korea KCC certification number for BT840F, BT840, BT840E.
- Feb. 2022, Version 1.21: Add BT840XE re certification with ANT060, a 6 dBi antenna.
- Apr. 2022, Version 1.22: Add Taiwan NCC and Brazil ANTEL certifications for BT840F, BT840, BT840E
- Sep. 2022, Version 1.23: Add module BT840XEE.
- Nov. 2022, Version 1.24: Add approtect information.
- Oct. 2023, Version 1.25: Replace BT840X/XE with BT840N/NE.
- Jan. 2024, Version 1.26: Correct errors in sleep crystal connection.
- July 2024, Version 1.27: Correct mechanical drawings and TX power setting.

Contact Us

United States:

Fanstel Corp.
7466 E. Monte Cristo Ave. Scottsdale AZ 85260
Tel. 1 480-948-4928
Fax. 1-480-948-5459
Email: info@fanstel.com
Website: www.fanstel.com

Taiwan:

Fanstel Corp.
10F-10, 79 Xintai Wu Road
Xizhu, New Taipei City, Taiwan 22101
泛世公司
臺灣省新北市汐止區新臺五路79號10樓之10, 22101
Tel. 886-2-2698-9328
Fax. 886-2-2698-4813
Email: info@fanstel.com
Website: www.fanstel.com

China:

Fanstel Technologies Corp.
11 Jiale Street
Ping-Dih, Long-Gang, Shen Zhen, GD 518117
泛世康科技(深圳)有限公司
廣東省深圳市龍崗區坪地鎮佳樂街11號
Tel. 86-755-8409-0928
Fax. 86-755-8409-0973
QQ. 3076221086
Email: info@fanstel.com
Website: www.fanstel.com