Introduction

⚠ WARNING

See the *Important Safety and Product Information* guide in the product box for product warnings and other important information.

Always consult your physician before you begin or modify any exercise program.

Set the goal. Strive for victory. It is a modern tool watch like no other. It's built from Grade-5 titanium to be harder and stronger, with a stunning new AMOLED touchscreen display. A wide variety of built-in sports apps with performance metrics will keep you at the top of your game.

Getting Started

When using your watch the first time, you should complete these tasks to set it up and get to know the basic features.

1. Press **LIGHT** to turn on the watch (page 2).
2. Follow the on-screen instructions to complete the initial setup.
   During the initial setup, you can pair your smartphone with your watch to receive notifications, sync your activities, and more (page 4).
3. Charge the device (page 9).
4. Start an activity (page 6).

Device Overview

① **Touchscreen**

- Tap to choose an option in a menu.
- Hold the watch face data to open the glance or feature.

  NOTE: This feature is not available on all watch faces.

- Swipe up or down to scroll through the glance loop and menus.
- Swipe right to return to the previous screen.
- Cover the screen with your palm to return to the watch face and turn down the screen brightness.

② **LIGHT**

- Press to turn on the watch.
- Press to turn down the screen brightness.
- Quickly press twice to turn on the flashlight.
- Hold to view the controls menu.

③ **UP·MENU**

- Press to scroll through the glance loop and menus.
- Hold to view the menu.

④ **DOWN**

- Press to scroll through the glance loop and menus.
- Hold to view the music controls from any screen.

⑤ **START·STOP**

- Press to choose an option in a menu.
- Press to view the activity list and start or stop an activity.
- Hold to open the performance glance.

⑥ **BACK·LAP**

- Press to return to the previous screen.
- Press to record a lap, rest, or transition during a multisport activity.

Enabling and Disabling the Touchscreen

- To temporarily enable or disable the touchscreen, hold **DOWN** and **START**.
- To enable or disable the touchscreen during general use, activities, or sleep, hold **MENU**, select **System** > **Touch**, and select an option.

Using the Watch

- Hold **LIGHT** to view the controls menu.

The controls menu provides quick access to frequently used functions, such as turning on do not disturb mode, saving a location, and turning the watch off.

- From the watch face, press **UP** or **DOWN** to scroll through the glance loop (page 4).
- From the watch face, press **START** to start an activity or open an app (page 5).
- Hold **MENU** to customize the watch face, adjust settings, and pair wireless sensors.

Viewing the Glance Loop

Glances provide quick access to health data, activity information, built-in sensors, and more. When you pair your watch, you can view data from your phone, such as notifications, weather, and calendar events.

1 Press **UP** or **DOWN**.

The watch scrolls through the glance loop and displays summary data for each glance.

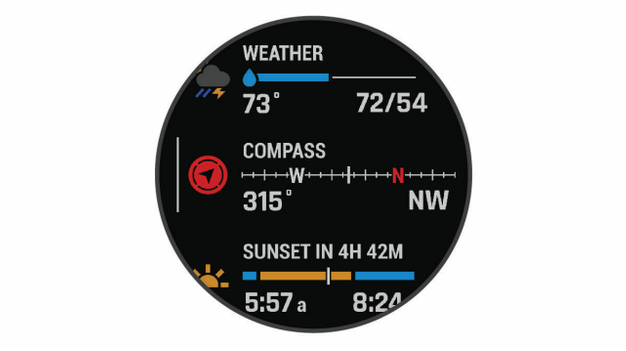

TIP: You can also swipe to scroll or tap to select options.

2 Press **START** to view more information.

3 Select an option:

- Press **DOWN** to view details about a glance.
- Press **START** to view additional options and functions for a glance.

Smart Features

Pairing Your Phone

To use the connected features on your watch, you must pair it directly through the Garmin Connect™ app, instead of from the Bluetooth® settings on your phone.

1. From the app store on your phone, install and open the Garmin Connect app.
2. During the initial setup, select **Yes** when you are prompted to pair with your phone.
3. Follow the instructions in the app to complete the pairing and setup process.

Setting Up Your Garmin Pay™ Wallet

The Garmin Pay feature allows you to use your watch to pay for purchases in participating stores. You can add one or more participating credit or debit cards to your Garmin Pay wallet. Go to garmin.com/garminpay/banks to find participating financial institutions.

1. From the Garmin Connect app, select ☰ or •••.
2. Select **Garmin Pay** > **Get Started**.
3. Follow the on-screen instructions.

You can open your Garmin Pay wallet from the controls menu on your watch. See the owner's manual for more information on using the Garmin Pay feature.

Music

You can download audio content to your device, so you can listen when your smartphone is not nearby. The Garmin Connect app and Garmin Express™ application allow you to download audio content from a third-party provider or your computer.

You can use the music controls to control music playback on your smartphone or to play music stored on your device. To listen to audio content stored on your device, you must connect headphones with Bluetooth technology.

Connect IQ™ Features

You can add Connect IQ apps, data fields, glances, music providers, and watch faces to your watch using the Connect IQ store on your watch or phone (garmin.com/connectiqapp).

Activities and Apps

Your watch can be used for indoor, outdoor, athletic, and fitness activities. When you start an activity, the watch displays and records sensor data. You can create custom activities or new

activities based on default activities. When you finish your activities, you can save and share them with the Garmin Connect community.

Starting an Activity

1. From the watch face, press **START**.
2. Select an activity.
3. If the activity requires GPS, go outside, and wait while the watch locates satellites.
4. Press **START** to start the activity timer.

   NOTE: The watch does not record your activity data until you start the activity timer.
5. After you complete your activity, press **STOP** to stop the activity timer.
6. Select **Save** to save the activity and review the activity summary.

Going for a Run

1. Press **START**.
2. Select an activity.
3. Go outside, and wait while the device locates satellites.
4. If necessary, wait while the device connects to your wireless sensors.
5. Press **START** to start the activity timer.

   NOTE: The device does not record your activity data until you start the activity timer.
6. Go for a run.
7. After you complete your run, press **STOP** to stop the activity timer.
8. Select **Save**.

Triathlon Training

When you participate in a triathlon, you can use the triathlon activity to quickly transition to each sport segment, to time each segment, and to save the activity.

1. Press **START**.
2. Select **Triathlon**.
3. Press **START** to start the activity timer.
4. Press **LAP** at the beginning and end of each transition.
5. After you complete your activity, press **STOP**, and select **Save**.

Physiological Measurements

These performance measurements are estimates that can help you track and understand your training activities and race performances. These estimates are provided and supported by Firstbeat Analytics™.

- Daily suggested workouts
- Functional threshold power (FTP)
- Heat and altitude acclimation
- HRV status
- Lactate threshold
- Performance condition
- Predicted race times
- Recovery time
- Training Effect
- Training Effect and primary benefit
- Training load (acute load)
- Training load focus
- Training status
- VO2 max.

NOTE: The estimates may seem inaccurate at first. The watch requires you to complete a few activities to learn about your performance. For more information, go to garmin.com /performance-data/running.

Training Status

Training status shows you how your training affects your fitness level and performance. Your training status is based on changes to your VO2 max., acute load, and HRV status over an extended time period. You can use your training status to help plan future training and continue improving your fitness level.

- Peaking
- Productive
- Maintaining
- Recovery
- Unproductive
- Detraining
- Overreaching
- Strained
- No Status

Device Information

About the AMOLED Display

By default, the watch settings are optimized for battery life and performance.

Image persistence, or pixel "burn-in," is normal behavior for AMOLED devices. To extend the display life, you should avoid displaying static images at high brightness levels for long time periods. To minimize burn-in, the display dims after the selected timeout. You can turn your wrist toward your body, tap the touchscreen, or press a button to wake the watch.

Wearing the Watch

⚠ CAUTION

Some users may experience skin irritation after prolonged use of the watch, especially if the user has sensitive skin or allergies. If you notice any skin irritation, remove the watch and give your skin time to heal. To help prevent skin irritation, ensure the watch is clean and dry, and do not overtighten the watch on your wrist.

For more information, go to garmin.com/fitandcare.

- Wear the watch above your wrist bone.

  NOTE: The watch should be snug but comfortable. For more accurate heart rate readings, the watch should not shift while running or exercising. For pulse oximeter readings, you should remain motionless.

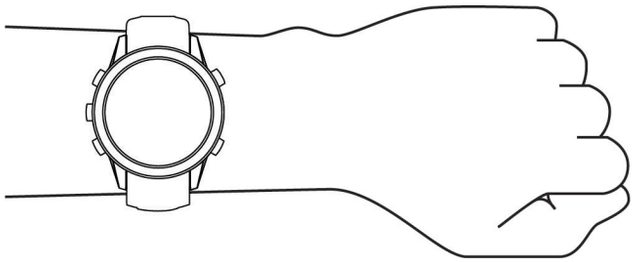

  NOTE: The optical sensor is located on the back of the watch.

- See the owner's manual for more information.

Changing Integrated QuickFit® Accessories

1. Pull to open the latch, and remove the integrated QuickFit strap or bracelet from the watch.

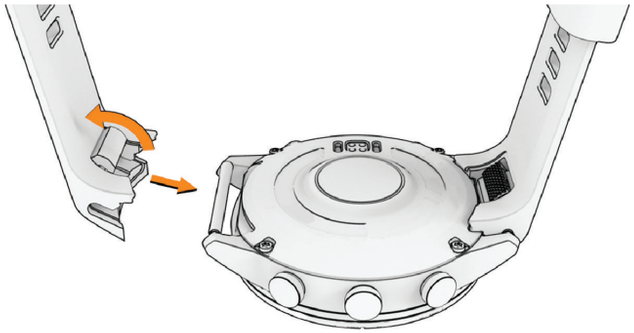

2 Pull to open the latch on the integrated strap or bracelet, and align it with the watch.

3 Close the latch over the watch pin.

NOTE: Make sure the strap or bracelet is secure. There should be a small gap ① between the latch and the strap or bracelet.

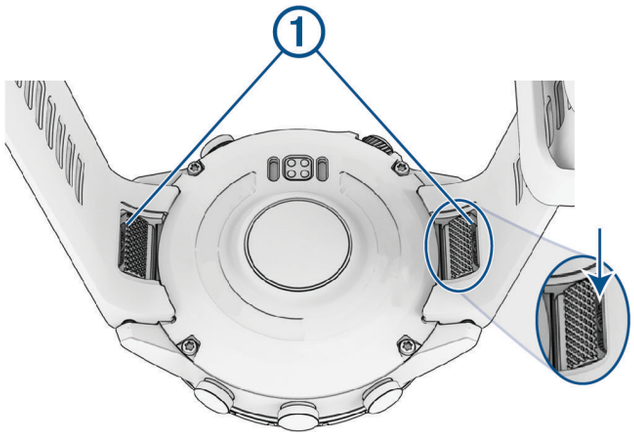

Charging the Device

⚠ WARNING

This device contains a lithium-ion battery. See the *Important Safety and Product Information* guide in the product box for product warnings and other important information.

Both the device and its charger contain magnets. Under certain circumstances, magnets may cause interference with some medical devices, including pacemakers and insulin pumps. Devices and chargers that contain magnets should be kept away from such medical devices.

NOTICE

Both the device and its charger contain magnets. Under certain circumstances, magnets may cause damage to some electronic devices, including hard drives in laptop computers. Use caution when devices and chargers that contain magnets are near electronic devices.

To prevent corrosion, thoroughly clean and dry the contacts and the surrounding area before charging or

connecting to a computer. Refer to the cleaning instructions in the owner's manual.

1 Align the charger with the back of the device, and press the charger into place.

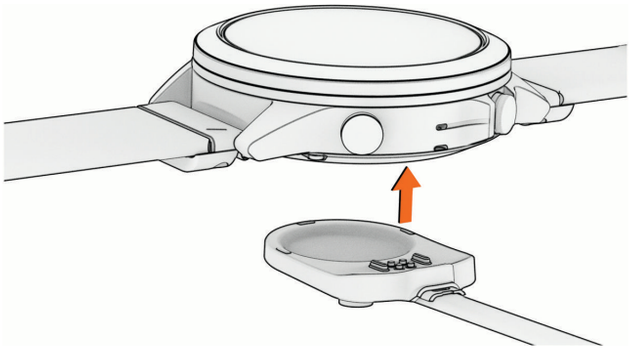

2 Plug the USB cable into a USB charging port.

The watch displays the current battery charge level.

Specifications

Operating temperature range: From -20 to 45°C (from -4 to 113°F)

Charging temperature range: From 0 to 45°C (from 32 to 113°F)

EU wireless frequency (power): 2.4 GHz @ 15.78 dBm maximum

EU SAR values: 0.58 W/kg torso, 0.03 W/kg limb

Troubleshooting

Restarting Your Watch

1 Hold **LIGHT** until the watch turns off.

2 Hold **LIGHT** to turn on the watch.

Getting the Owner's Manual

The owner's manual includes instructions for using device features and accessing regulatory information.

Go to **garmin.com/manuals**.

Getting More Information

You can find more information about this product on the Garmin® website.

- Go to **support.garmin.com** for additional manuals, articles, and software updates.
- Go to **buy.garmin.com**, or contact your Garmin dealer for information about optional accessories and replacement parts.
- Go to **www.garmin.com/ataccuracy** for information about feature accuracy.

  This is not a medical device.

support.garmin.com
Printed in Taiwan
August 2022
190-02971-03_0A