Module Integration Guide

UHF RFID Reader Module
#70115658 SUBA F F190-UHF RF92 FR2
FCC ID: IREIURF190
IC ID: 7037A-IURF190

Table of Contents

1 General Description ... 4
1.1 Module description ... 4
1.2 Module features ... 4
1.3 Qualified personnel ... 4
1.4 Environmental conditions ... 4
1.5 Module components ... 4
1.6 Block Diagram ... 6
1.7 PCBs of module in housing ... 7
1.8 Interfacing of module ... 7
2 Mechanical characteristics ... 8
2.1 Housing ... 8
2.2 Dimensions ... 8
2.3 Mounting ... 8
2.3.1 Minimum Distances ... 8
2.4 Labeling ... 9
2.5 Shielding ... 9
2.6 Cooling of RF electronic ... 9
2.7 Mounting host inside housing ... 9
2.7.1 PCB outline of host for integration into module housing ... 9
2.7.2 Position of host interface connector ... 9
2.7.3 Variants of host interface connectors ... 9
2.7.4 Filling ... 10
3 Electrical characteristics ... 10
3.1 Maximum Ratings ... 10
3.2 Pin definition ... 11
3.3 Supply voltage ... 11
3.4 Data Interface ... 11
3.5 ESD sensitivity ... 11
3.6 Ground connection ... 11
4 RF characteristics ... 12
4.1 Transmit characteristics ... 12
4.2 Hopping scheme ... 12
4.3 Antenna ... 12
4.3.1 Polarization ... 12
4.3.2 Antenna diagram ... 13
5 Firmware characteristics ... 14
5.1 Description of air interface ... 14
5.2 Country Identifier ... 14
5.3 Channel set and hopping ... 14
5.4 Indicator Elements ... 14
5.5 UART settings ... 14

5.6 Structure of Control commands 15
5.6.1 Commands to module 15
5.6.2 Responses from module 15
5.7 Typical Control commands 16
5.7.1 Polarization setting 16
5.7.2 Power setting 16
5.7.3 Reading UII of EPC Gen2 (ISO/IEC 18000-63) 16
5.7.4 Further commands 16
5.8 Special test modes needed for certification 16
6 FCC Regulatory Information 17
6.1 User Guide Requirements 17
6.2 Labeling Requirements 17
6.3 Approved Antennas 17
7 IC Regulatory Information 18
7.1 User Guide Requirements 18
7.2 Labeling Requirements 18
7.3 Approved Antennas 18
8 Further Information to user 19
8.1 User Guide Requirements 19
9 Change history 20

1 General Description

1.1 Module description

The module operates in the UHF frequency range and is optimized for use in industrial applications involving medium distances. The device reads and writes passive tags in line with EPC Generation 2 (ISO/IEC 18000-63). The module can be used in the United States and Canada. The module is compliant with the relevant transmission regulations. Wide range of options supported for filtering data. The user can monitor the status of the module using the integrated LEDs. The module has a typical detection range of around 2 meters; this range is determined by the tag used and can be adjusted by configuring the transmission power. Other influencing factors include the setup and installation of the specific application and the surrounding materials, particularly metal. The read and write distances for the relevant tag, which are detailed separately, have been established in a test laboratory under ideal conditions. For the actual read and write distances under real conditions, the combination of module and tag must be tested in the desired application. The radio module can be interfaced to various industrial busses by host product.

1.2 Module features

- Flexible UHF read/write head with medium detection range
- Compact and robust housing for harsh industrial environments
- Switchable antenna polarization guarantees reliable tag detection and enhances process flow
- Multi-tag reading of up to 40 tags ensures increased productivity
- Provides simple interface for host products

1.3 Qualified personnel

Only appropriately trained and qualified personnel may carry out mounting, installation, commissioning, operation, maintenance, and dismounting of the product. The personnel must have read and understood the instruction manual and the further documentation. Prior to using the product make yourself familiar with it. Read the document carefully.

1.4 Environmental conditions

Operating or storing the module outside the specified range may damage the module. Also this could lead to incorrect operation of desired module functionality.

Table 1 Environmental operating conditions

Absolute maximum rating	Value
Operation temperature (with non-transmission periods, adjustable)	-20 ... +70°C
Operation temperature (Continuous transmission mode)	-20 ... +60°C
Storage temperature	-40 ... +85°C

The maximum relative humidity is 80 % for temperatures up to 31 °C, decreasing linearly to 50% relative humidity at 40 °C.

1.5 Module components

The radio module consist of 3 PCBs as shown in block diagram.

- ANT-PCB (#70119402 PCBA S IUT-F190 FR2 AntHV1):
  is used as carrier for Antenna element and cover of shielding.
- RF-PCB (#70119403 PCBA S IUT-F190 FR2 RF-G2-3):
  contains the RF electronic part which acts as well bottom part of shielding.
- µC-PCB (#70109836 PCBA S IUH-F190-V1-FRx uC-G2-2):
  contains the control logic and power supply for the RF part.

Figure 1 Example of module housing (with host to user connector mounted)

The aluminum housing part (coated with black color) is used to carry the PCBs and also provides shielding for the RF circuit. The plastic top cover part (here green variant) protects the antenna to the environmental harms. The top cover can be supplied in multiple color variants without affecting the module approval.

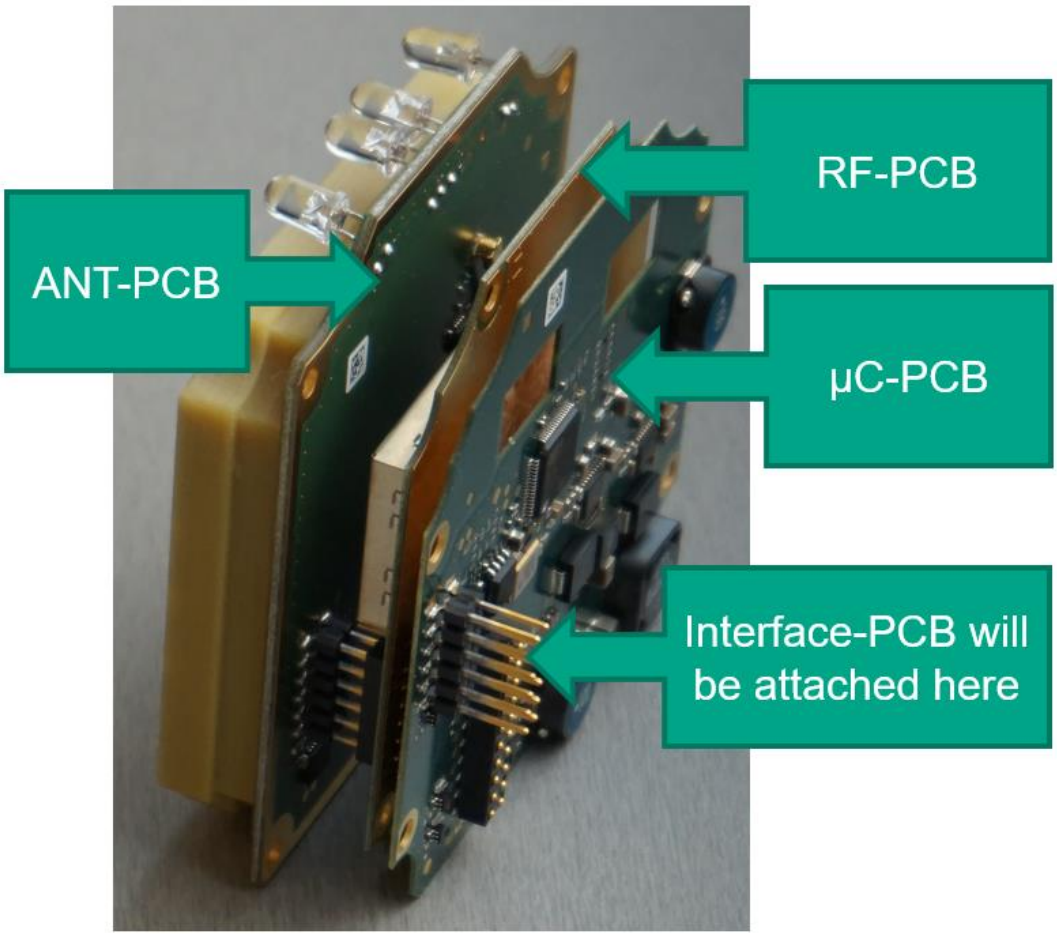

Figure 2 PCBs of radio module (without housing for visualization)

1.6 Block Diagram

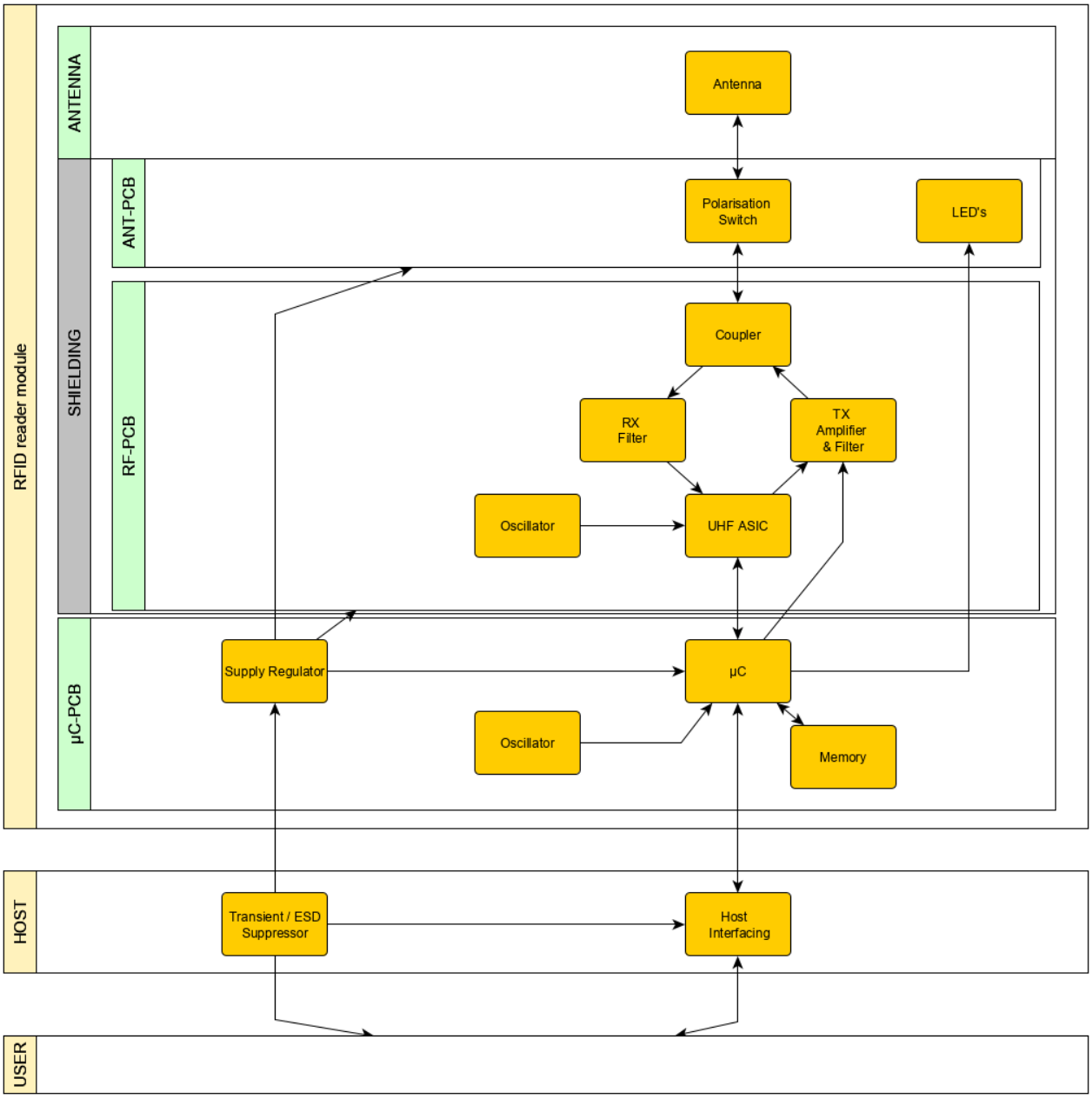

Figure 3 Block diagram

1.7 PCBs of module in housing

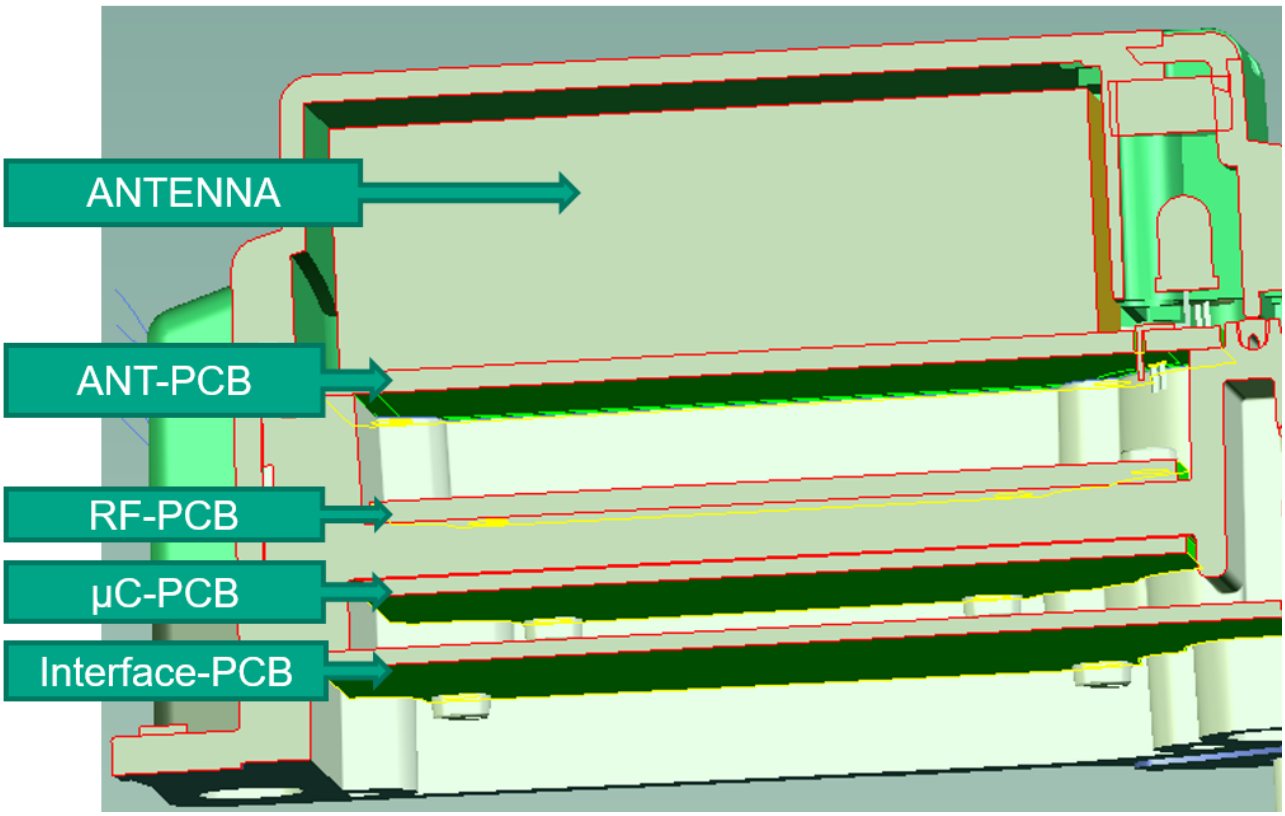

Figure 4 mounting of PCBs in housing (interface-PCB shown as example for host)

1.8 Interfacing of module

The interfacing of module is made in host product, which provides the typical 24V supply to the module. Also the digital interface of RFID reader is interfaced via serial interface at CMOS Levels. The housing of module is designed to be able to contain the host product as well and a variable amount of external connectors.

2 Mechanical characteristics

2.1 Housing

The housing of module can also be the housing of end product, as there is space for implementing the interface PCB on the bottom side of the RFID reader module. The housing can therefore be modified in part of external connection, as long as the shielding cavity between ANT-PCB and RF-PCB is not touched.

The housing material provides a flammability class of UL94-V0.

2.2 Dimensions

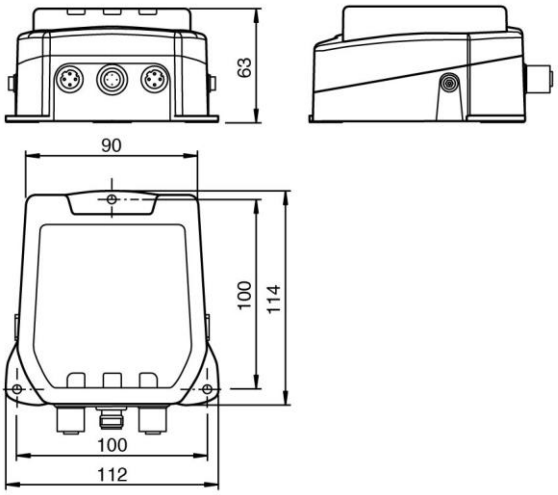

Figure 5 Dimensions of module housing (without host connections, one host connector showed for visualization)

2.3 Mounting

To attach the housing, use 3 screws with a diameter of 4 mm, as well as mounting materials that are suitable for the type of mounting surface. The tightening torque of the screws depends on the type of mounting.

2.3.1 Minimum Distances

When positioning the housing, please observe the minimum distances. The lateral distance between the housing and metals or liquids should be at least 50 cm. The distance between the housing and the ground should be at least 50 cm.

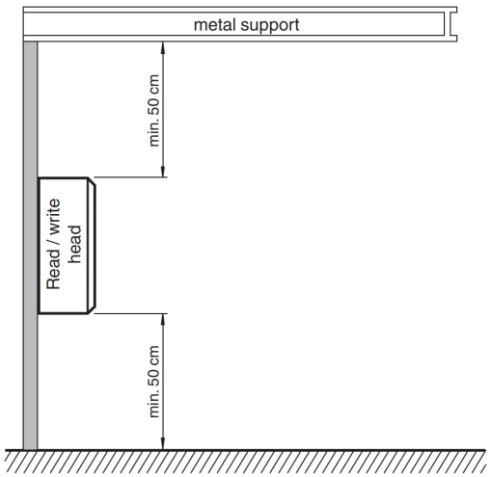

Figure 6 minimum distances

2.4 Labeling

The labeling of the module is applied on the RF-PCB. The top cover of module may be used for host product labeling.

2.5 Shielding

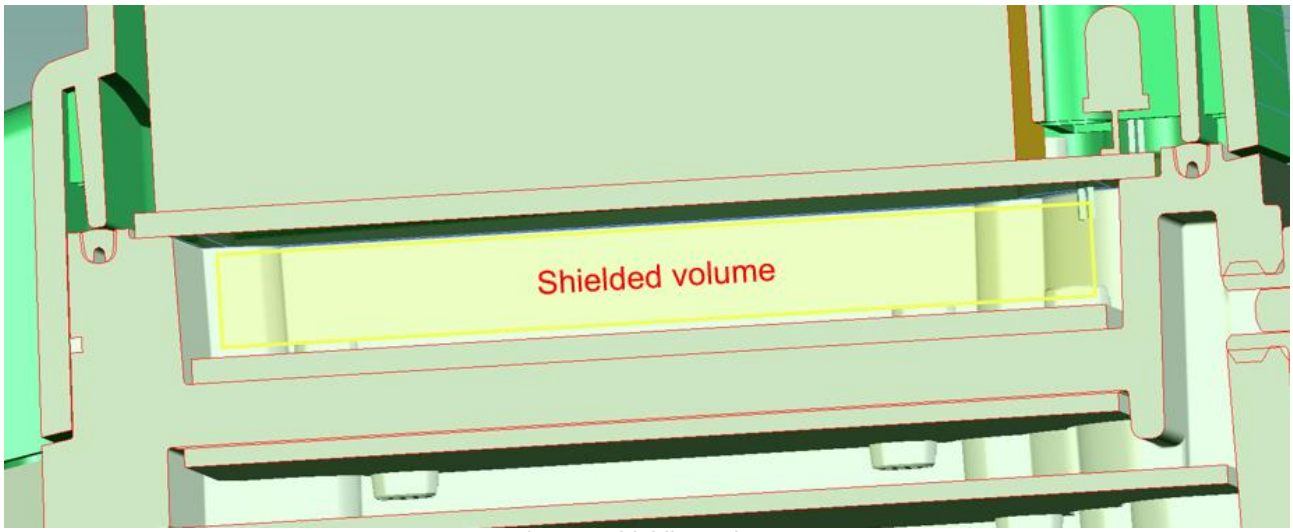

Figure 7 shielding volume

2.6 Cooling of RF electronic

The RF-PCB is mounted on the metal part of housing to provide a good thermal flux to the environment. Therefore the metal part is used as heat sink and may get hot. Be careful not to burn your fingers when handling the device! After shutting down the device, wait at least half an hour before handling the device.

2.7 Mounting host inside housing

2.7.1 PCB outline of host for integration into module housing

A 3D model of module can be requested by module integrator.

2.7.2 Position of host interface connector

A 3D model of module containing position of interface connector can be requested by module integrator.

2.7.3 Variants of host interface connectors

The housing has a connection area where different connection variants can derivate from the module housing, without having influence on the modular approval of radio part. For this purpose the connection area is designed without touching the inner module parts and the shielding volume. The connection can be made by 1 or by multiple connectors as shown below. These connections are located outside the scope of approval and are only connected to the interface PCB (host part).

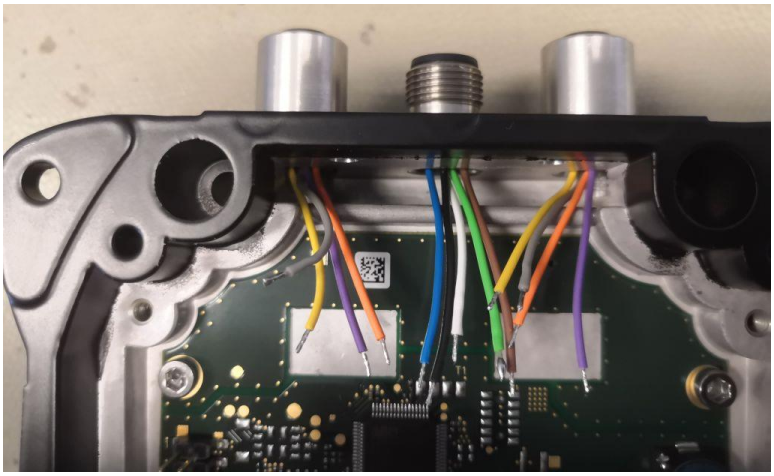

Figure 8 interfacing connectors (example)

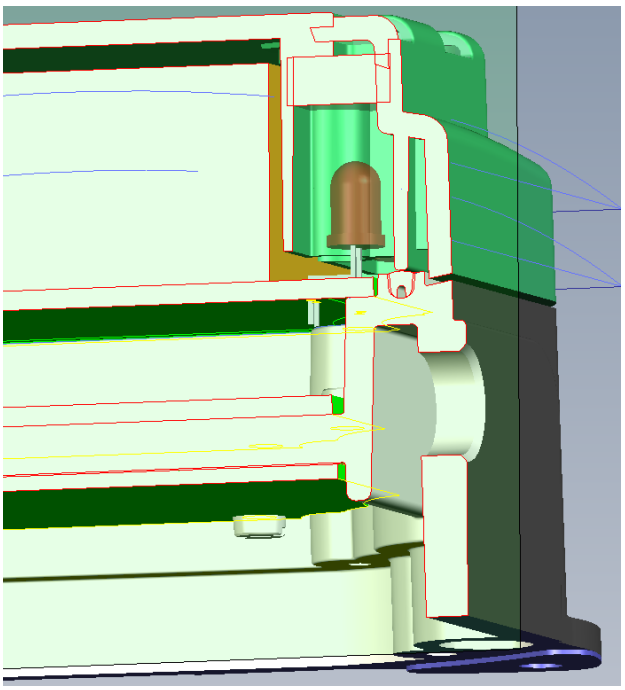

Figure 9 Drilled holes for connection of host PCB to end user

2.7.4 Filling

For the bottom part of the module housing a filling with potting material is allowed. The filling may also cover the µC-PCB of module. The shielded volume and the area around the antenna shall not be filled by any material different than normal air.

3 Electrical characteristics

3.1 Maximum Ratings

Table 2 Electrical operating conditions

maximum ratings	Value
Supply voltage	typical 24V DC, allowed range of 20 … 30V DC
All digital interfacing signals	0 … 3.3V

3.2 Pin definition

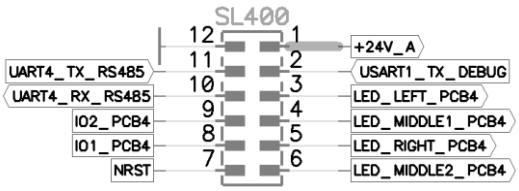

Figure 10 Pinning of module to host connection

Table 3 Pinning of module to host connection

Pin	Usage radio module	Direction	Usage host	Level
1	Supply voltage into module	To module	Provide supply	20 … 30V DC
2	UART for debug data output	To host	DO NOT CONNECT	
3	Reserved	To module	DO NOT CONNECT	
4	Reserved	To module	DO NOT CONNECT	
5	Reserved	To module	DO NOT CONNECT	
6	Reserved	To module	DO NOT CONNECT	
7	RESET input	To module	Pull to low level, to reset module	0V … 3.3V
8	Reserved	Bidirectional	DO NOT CONNECT	
9	UART direction	To host	Low = RX/ High = TX is active	0V … 3.3V
10	UART for module configuration and RFID data transfer	To module		0V … 3.3V
11		To host		0V … 3.3V
12	GROUND	Bidirectional	GROUND	

3.3 Supply voltage

Nominal power supply voltage is 24 VDC; voltage range is 20 ... 30 VDC. Supply must be PELV (Protective Extra Low Voltage). The ground connection is module internal connected to metal housing and its grounding screw. The current / power consumption of module will be in range of ≤ 450mA / ≤ 9 W

3.4 Data Interface

A UART interface is used for module configuration and RFID data transfer.

3.5 ESD sensitivity

The digital interfacing signals must be protected against electro static discharge on host side, if made available to end user.

3.6 Ground connection

The housing provides the possibility to connect a ground connection. The module does not require grounding, but in case of various interface variants of host product this connection can be used for EMC reasons.

4 RF characteristics

4.1 Transmit characteristics

- UHF frequency range: 902 MHz … 928 MHz
- Radiated Power: 3 … 1250 mW_{EIRP}; Default setting = 125 mW_{EIRP}
- Channel bandwidth: 500 kHz
- Channel spacing: 500 kHz
- Frequency access method: frequency hopping spread spectrum.
- Number of channels: 50
- Channels used: 1, 2, 3, ... 50
  Center frequencies: 902.25 MHz + (M x 0.5) MHz
  All 50 channels are always used.

4.2 Hopping scheme

The ISM band from 902 MHz ... 928 MHz is available in the USA / Canada. The band is split into 50 channels, each with a 500 kHz bandwidth. FHSS with a maximum retention time of 0.4 seconds is used. All channels must be used. Channel restriction is not permitted. A pseudo random hopping scheme is used.

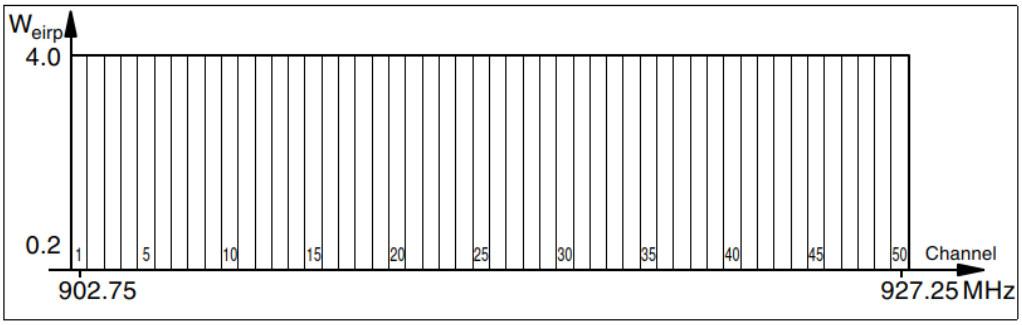

Figure 11 hopping scheme

4.3 Antenna

4.3.1 Polarization

The module has an integrated linear dual polarized antenna. The read/write heads can transmit and receive waves with horizontal and vertical polarization.

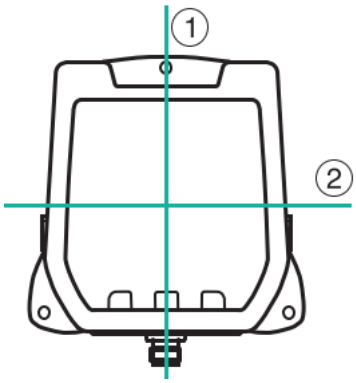

Figure 12 Polarization planes (1=Vertical, 2=Horizontal)

The module operates in combined mode by default. In combined mode, both horizontal and vertical polarization are used for each read/write access. This increases the reading reliability of tags with an unknown location in the room.

4.3.2 Antenna diagram

The antenna diagrams show the electric field strength in the far field depending on the direction. The front of the integrated antenna points towards 0°.

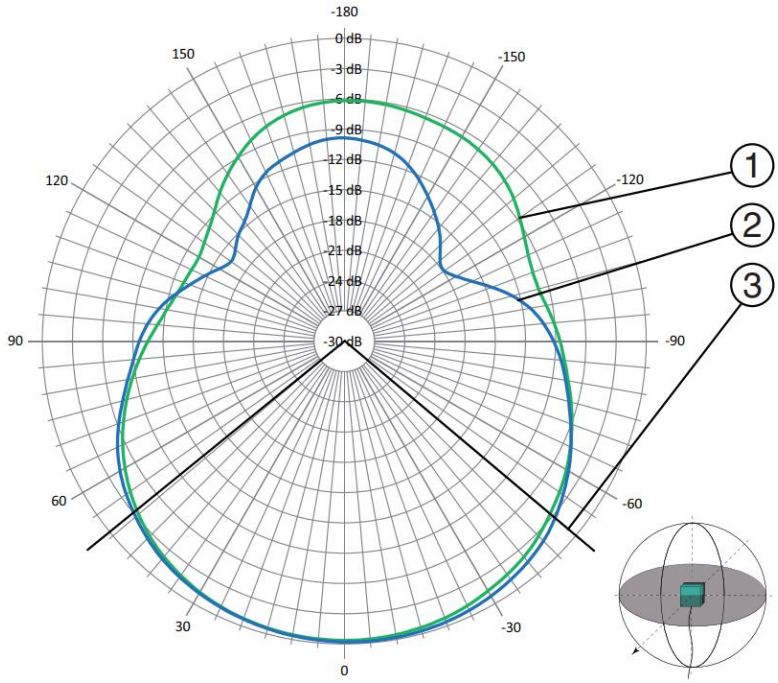

Figure 13 Antenna diagram – horizontal cut
(1) Horizontal polarization
(2) Vertical polarization
(3) Full width at half maximum

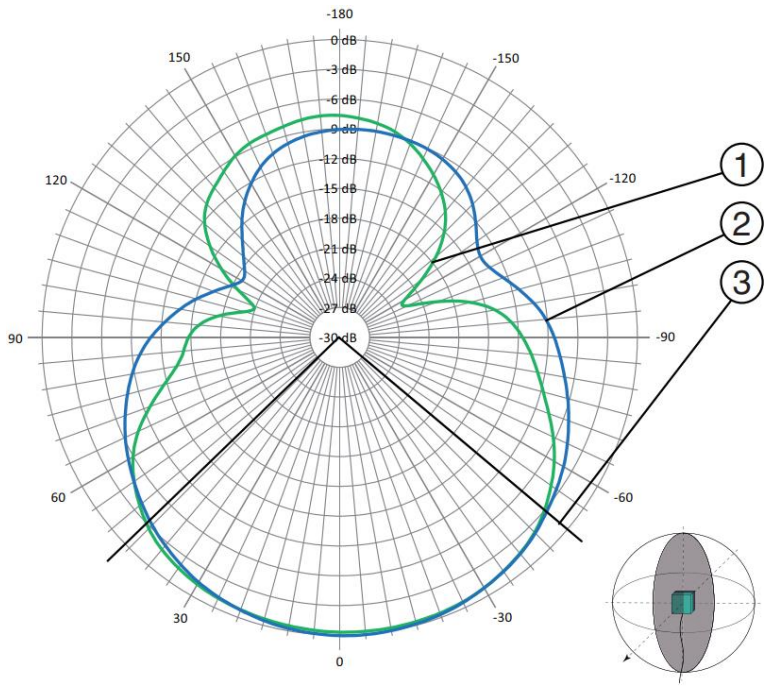

Figure 14 Antenna diagram – vertical cut
(1) Horizontal polarization
(2) Vertical polarization
(3) Full width at half maximum

5 Firmware characteristics

5.1 Description of air interface

For detailed information about the air interface protocol please refer to EPC Gen 2 (ISO/IEC 18000-63) and GS1 organization (https://www.gs1.org/).

5.2 Country Identifier

The module operates within their maximum frequency range with the appropriate settings for the relevant country. The country-specific settings are configured during production and cannot be subsequently modified.

5.3 Channel set and hopping

The number and position of the frequencies is fixed and cannot be changed by the user. All channels are used.

5.4 Indicator Elements

The read/write head has 3 LEDs, which are green/blue/yellow. The various indicators denote:

- Green LED: Power on
- Blue LED: Transmission mode
- Yellow LED: Read/write operation successful

5.5 UART settings

The default interface setting is:

- 38400 baud
- 8 data bits
- 1 stop bit
- no parity
- no flow control

5.6 Structure of Control commands

Note: The notation "." With following two digits (e.g. ".0A") shows one byte with hexadecimal value 0x0A.

5.6.1 Commands to module

The command format is build up by several elements:
<CMD> <CmdID> <SystemCode> <DATA> <CHCK> <ETX>

Symbol	Meaning
<CMD>	Two byte of Command, ASCII coded
<CmdID>	"1", ASCII coded
<SystemCode>	"U" for UHF
<DATA>	Variable length data, command depended
<CHCK>	Checksum of previous bytes (sum of each single byte value)
<ETX>	End character "03hex", not shown at following examples

5.6.2 Responses from module

The response format is build up by several elements:
<STATUS> <CmdID> <CmdCode> <DATA-LENGTH> <DATA> <CHCK> <ETX>

Symbol	Meaning
<STATUS>	One byte of Command, ascii coded: "0" → SUCCESS "2" → DEVICE_READY "4" → INVALID_COMMAND "5" → READ_OR_WRITE_ERROR "6" → HARDWARE_ERROR "7" → SOFTWARE_ERROR "B" → INFO_FRAME "F" → LAST_TELEGRAM
<CmdID>	"1", ascii coded
<CmdCode>	Two bytes, depended from previous send command
<DATA-LENGTH>	Three bytes of ASCII coded length
<DATA>	Variable length data, command depended
<CHCK>	Checksum of previous bytes (sum of each single byte value)
<ETX>	End character "03hex", not shown at following examples

5.7 Typical Control commands

Note: The checksum and ETX “<CHCK> <ETX>” is not shown below, as it can be calculated depending on command / response.

5.7.1 Polarization setting

RP1UAP.00.00	reads out the set polarization Response: 01BE001**C** (here “C” for combined mode)
WP1UAP.00.01H	switches the polarization to horizontally linear Response: **0**1BF000 (SUCCESS)
WP1UAP.00.01V	switches the polarization to vertically linear Response: **0**1BF000 (SUCCESS)
WP1UAP.00.01C	switches the polarization to combined mode Response: **0**1BF000 (SUCCESS)

5.7.2 Power setting

RP1UPT.00.00	reads out the set power Response: 01BE002**.00.7D** (here 0x007D for power level 125mW)
WP1UPT.00.02**.00.32**	sets power to **50mW** (hexadecimal coded) Response: **0**1BF000 (SUCCESS)
WP1UPT.00.02**.04.E2**	sets power to **1250mW** (hexadecimal coded) Response: **0**1BF000 (SUCCESS)

5.7.3 Reading UII of EPC Gen2 (ISO/IEC 18000-63)

SS10	reads the UII for one single time Response if no transponder in field:	
	F10A004**0000**	(number of Transponder ASCII coded)
	Response if one transponder in field:	
	010A006**.00.04.0C.00.AA.BB**	**(UII of transponder with length 6)**
	F10A004**0001**	(number of Transponder ASCII coded)
ES10	starts reading the UII permanently Responses:	
	5171000	(initial not Transponder in field)
	0171006**.00.04.0C.00.AA.BB**	(Transponder entered field)
	5171006**.00.04.0C.00.AA.BB**	(Transponder leaved field)
QU1	quit transmission Response: **0**102000 (SUCCESS)	

5.7.4 Further commands

The full command set can be requested under a non disclosure agreement.

5.8 Special test modes needed for certification

For certification a different firmware including test modes can be requested by test laboratory under a non disclosure agreement. This firmware will not be available for end user.

6 FCC Regulatory Information

6.1 User Guide Requirements

FCC Information
This device complies with part 15 of the FCC rules. Operation is subject to the following two conditions:
(1) This device may not cause harmful interference, and
(2) This device must accept any interference received, including interference that may cause undesired operation.
Caution: Changes or modifications not expressly approved by the party responsible for compliance could void the user's authority to operate the equipment.

Note
This equipment has been tested and found to comply with the limits for a Class A digital device, pursuant to part 15 of the FCC Rules. These limits are designed to provide reasonable protection against harmful interference when the equipment is operated in a commercial environment. This equipment generates, uses, and can radiate radio frequency energy and, if not installed and used in accordance with the instruction manual, may cause harmful interference to radio communications. Operation of this equipment in a residential area is likely to cause harmful interference in which case the user will be required to correct the interference at his own expense.

FCC Notice
To comply with FCC part 15 rules in the United States, the system must be professionally installed to ensure compliance with the Part 15 certification. It is the responsibility of the operator and professional installer to ensure that only certified systems are deployed in the United States. The use of the system in any other combination (such as co-located antennas transmitting the same information) is expressly forbidden.

FCC Exposure Information
To comply with FCC RF exposure compliance requirements, the antennas used for this transmitter must be installed to provide a separation distance of at least 30 cm from all persons and must not be co-located or operated in conjunction with any other antenna or transmitter.

Warning!
Malfunctions with pacemakers
This device does not exceed the permissible limits for electromagnetic fields. Maintain a minimum distance of 30 cm between the device and your pacemaker. Inadequate distance from the transmitter antenna can result in inhibitions, reprogramming, or incorrect stimulation pulses.

6.2 Labeling Requirements

Contains FCC ID: IREIURF190

6.3 Approved Antennas

Only module internal antenna may be used.

7 IC Regulatory Information

7.1 User Guide Requirements

IC Information
This device complies with Industry Canada license exempt RSS standard(s) and with part 15 of the FCC Rules. Operation is subject to the following two conditions:
(1) This device may not cause interference, and
(2) This device must accept any interference, including interference that may cause undesired operation of the device.

Le présent appareil est conforme aux CNR d'Industrie Canada applicables aux appareils radio exempts de licence. L'exploitation est autorisée aux deux conditions suivantes :
(1) l'appareil ne doit pas produire de brouillage, et
(2) l'utilisateur de l'appareil doit accepter tout brouillage radioélectrique subi, même si le brouillage est susceptible d'en compromettre le fonctionnement.

IC Exposure Information
To comply with IC RF exposure compliance requirements, the antennas used for this transmitter must be installed to provide a separation distance of at least 30 cm from all persons and must not be co-located or operated in conjunction with any other antenna or transmitter.

Warning!
Malfunctions with pacemakers
This device does not exceed the permissible limits for electromagnetic fields. Maintain a minimum distance of 30 cm between the device and your pacemaker. Inadequate distance from the transmitter antenna can result in inhibitions, reprogramming, or incorrect stimulation pulses.

Warning!
Dysfonctionnement du stimulateur cardiaque
Cet appareil ne dépasse pas les limites admissibles pour les champs électromagnétiques. Maintenez une distance minimale de 30 cm entre l'appareil et votre stimulateur cardiaque. Si la distance à la tête de émetteur est trop courte, des impulsions d'inhibition, de reprogrammation ou de stimulation incorrecte peuvent se produire.

7.2 Labeling Requirements

Contains IC: 7037A-IURF190

7.3 Approved Antennas

Only module internal antenna may be used.

8 Further Information to user

8.1 User Guide Requirements

Warning!
Hot surfaces
Be careful not to burn your fingers when handling the device! After shutting down the device, wait at least half an hour before handling the device.

Warning!
Surfaces chaudes
Attention, risque de brûlure lors de la manipulation de l'appareil! Après la mise hors tension, laissez l'appareil refroidir pendant au moins une demi-heure avant de le toucher.

Caution!
Mounting the read/write head
Make sure that the read/write head is firmly attached to the mounting surface.

Caution!
Assemblage de la tête de lecture / écriture
Assurez-vous que la tête de lecture / écriture est fermement connectée à la terre.

Note!
Do not route the connection cable in the detection range of the antenna. To attach the device, use 3 screws materials that are suitable for the type of depends on the type of mounting.

Minimum Distances
When positioning the read/write head, please observe the minimum distances. The lateral distance between the read/write head and metals or liquids should be at least 50 cm. The distance between the read/write head and the ground should be at least 50 cm.

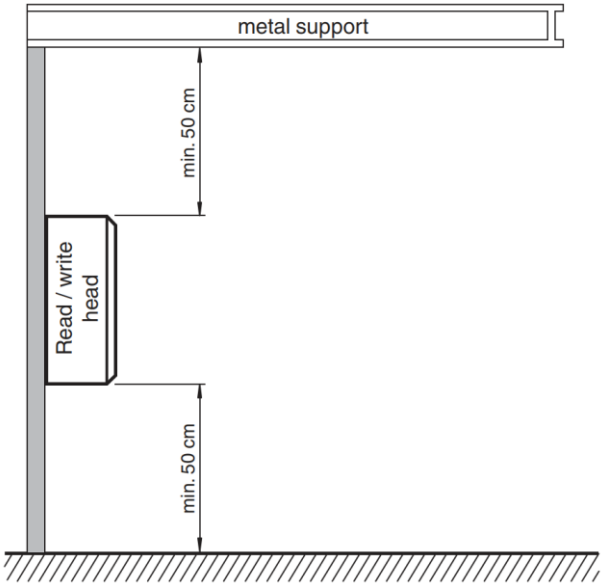

Figure 15 minimum distances

During simultaneous operation of several read/write heads, only one read/write head may ever communicate with a tag at any given time. When arranging the read/write heads, make sure that the measurement ranges do not overlap. You can enlarge or reduce the size of the measurement range by changing the transmitting power. Determine the measurement range of each read/write head at the mounting location.

9 Change history

Version	Date	Author	Remarks
14-3502	2020-02-28	Martin Schmitt	Initial released version
14-3502a	2020-06-22	Martin Schmitt	Added uart direction pin
14-3502b	2020-09-09	Martin Schmitt	Updated information about hopping scheme