RISE™ VUSION

EXTREME FPV RACE PACK

INSTRUCTION MANUAL

WARNING

Please read and understand this manual, the operation and all safety aspects required for the safe operation of the product. Before use, if you feel that this product is not for you, please return it to the place of purchase.

Manual Specifications and Description Changes

The instruction manual, warranties, and other associated documentation are subject to change without notice. Hobbico assumes no responsibility for inadvertent errors to this manual.

© 2016 RISE, a Hobbico company. HOBBICO™

RISE0200/05

INTRODUCTION

Thank you for purchasing the VUSION FPV RACER. We want the time you spend with your new R/C quadcopter to be fun and successful so please read the entire manual before beginning setup. If for any reason you think this R/C model is not for you, return it to the dealer immediately. Your dealer cannot accept returns on any model after final assembly.

For the latest technical updates or manual corrections for the VUSION FPV RACER please visit the Rise web site at www.explore-rise.com . If there is any new technical information, changes or important updates to this model, a “tech notice” box will appear on the page. Click the “tech notice” box to learn more.

SAFETY PRECAUTIONS

Failure to follow these safety precautions may result in injury to yourself and others.

- Keep your face and body as well as all spectators away from the rotating plane of the blades whenever the battery is connected. Keep loose clothing, shirt sleeves, ties, scarfs, long hair or loose objects such as pencils or screwdrivers that may fall out of shirt or jacket pockets away from the rotors. The spinning blades of a model quadcopter can cause serious injury. When choosing a flying site for your VUSION FPV RACER, stay clear of buildings, trees and power lines. **AVOID** flying in or near crowded areas. **DO NOT** fly close to people or pets. Maintain a safe distance from the quadcopter.
- Your VUSION FPV RACER should not be considered a toy. Because of its performance capabilities, the VUSION FPV RACER, if not operated correctly, could cause injury to you or spectators and damage to property.
- **DO NOT** alter or modify the model. Doing so may result in an unsafe or unflyable model.
- When and if repairs are necessary you must correctly install all components so that the model operates properly on the ground and in the air. Please check the operation of the model before every flight to insure that all equipment is operating and that the model has remained structurally sound. Be sure to check connectors and the propellers before each flight. Replace them if they show any signs of wear or fatigue.

KNOW BEFORE YOU FLY

As a new owner of an unmanned aircraft system (UAS), you are responsible for the operation of this vehicle and the safety of those around you. Please contact your local authorities to find out the latest rules and regulations.

KNOW BEFORE YOU FLY

knowbeforeyoufly.org

Federal Aviation Administration

faa.gov/uas

AMA

We urge you to join the AMA (Academy of Model Aeronautics) and a local R/C club. The AMA is the governing body of model aviation and membership is required to fly at AMA clubs. Though joining the AMA provides many benefits, one of the primary reasons to join is liability protection. Coverage is not limited to flying at contests or on the club field. It even applies to flying at public demonstrations and air shows. Failure to comply with the Safety Code may endanger insurance coverage. Additionally, training programs and instructors are available at AMA club sites to help you get started the right way. There are over 2,500 AMA chartered clubs across the country. Contact the AMA at the address or toll-free phone number that follows.

Academy of Model Aeronautics
5151 East Memorial Drive
Muncie, IN 47302-9252
Tele. (800) 435-9262
Fax (765) 741-0057

AMA
SINCE 1936

Or via the Internet at: www.modelaircraft.org

IMPORTANT: Two of the most important things you can do to preserve the radio controlled aircraft hobby are to avoid flying near full-scale aircraft and avoid flying near or over groups of people.

BATTERY WARNINGS

- **ALWAYS** unplug your battery from either the charger or quadcopter after use. **NEVER** store your quadcopter with the battery plugged into the quadcopter.
- **DO NOT** attempt to charge your battery if it becomes swollen or hot.
- The VUSION FPV RACER does not have a voltage cutoff/failsafe. When the alarm sounds, land the quad and disconnect the battery.
- It is best to store your batteries in a cool, dry location at 1/2 charge (11.4V). Storing a fully discharged battery may cause irreversible damage to the battery.
- **NEVER** disassemble, puncture or modify the battery pack in any way.
- **NEVER** allow the battery temperature to exceed 150° F [65° C].
- If your battery begins to swell or "puff" during charge or discharge or becomes damaged in any way, stop using it.

WARRANTY

RISE™ guarantees this kit to be free from defects in both material and workmanship at the date of purchase. This warranty does not cover any component parts damaged by use or modification. In no case shall RISE's liability exceed the original cost of the purchased kit. Further, RISE reserves the right to change or modify this warranty without notice. In that RISE has no control over the final assembly or

material used for final assembly, no liability shall be assumed nor accepted for any damage resulting from the use by the user of the final user-assembled product. By the act of using the user-assembled product, the user accepts all resulting liability. If the buyer is not prepared to accept the liability associated with the use of this product, the buyer is advised to return this kit immediately in new and unused condition to the place of purchase.

To make a warranty claim, send the defective part or item to Hobby Services at this address.

Hobby Services
3002 N. Apollo Dr., Suite 1
Champaign, IL 61822 USA

217-398-8970 ext#6
productsupport@hobbyservices.com

Include a letter stating your name, return shipping address, as much contact information as possible (daytime telephone number, fax number, e-mail address), a detailed description of the problem and a photocopy of the purchase receipt. Upon receipt of the package the problem will be evaluated as quickly as possible.

FEATURES

- Entry Level 250 class racing quad
- Oneshot125 speed controls
- 2280kV 1806 size Brushless motors
- Ready to Fly, no building required
- Flight Controller is pre-programmed, no setup needed
- 600TVL FPV Camera
- 200mW or 25mW VTX
- On Board DVR

DIMENSIONS

Size: 250mm (9.8in) diagonally motor to motor
Width: 241mm (9.5in)
Length: 252mm (9.9in)
Height: 69mm (2.7in)
Prop: 5 x 4.5
Blade Length: 127mm (5in)
Empty Weight: 502g (17.7oz.) without battery

CONTENTS

- RTF RISE VUSION FPV RACER
- Transmitter
- FPV Goggle with Monitor
- Monitor Antenna
- Goggle Foam Liner
- 1500mA 3S LiPo
- LiPo Charger w/AC Adapter

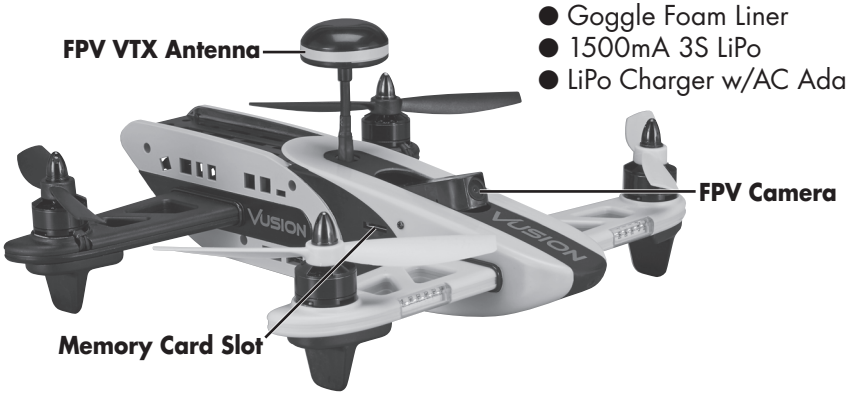

SETUP

The VUSION FPV RACER is completely assembled. All the bolts have been set to the proper torque and have thread locking compound applied where needed to keep them secure.

FPV ANTENNA

Always attach the FPV VTX antenna before connecting the battery to the Vusion. If the quadcopter is operated without the FPV antenna, the VTX could be damaged.

BATTERY CHARGING

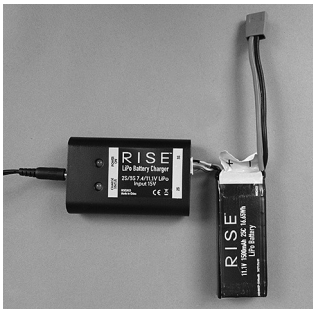

Plug the AC wall adapter into a 120V outlet and connect the balance charger to the wall adapter. The power LED will illuminate solid RED. Plug the white balance plug on the battery to the 3S port on the charger. When charging, the charge status LED will illuminate solid RED. When charge is complete the LED will change to solid GREEN. Typical charge time of a depleted battery is approximately 2 hours.

NOTE: A blinking red charge status LED indicates a charging error.

- **NEVER** leave the battery unattended while charging.
- **ALWAYS** unplug the charger from the outlet and the battery when charging is complete.
- **NEVER** charge a puffed or damaged battery.

NOTE: It is normal for the charger to get warm during the charging process

BATTERY INSTALLATION

Pull on the edge of the battery tray cover to unsnap it from the Vusion's frame

Remove the cover and install the battery. Tuck the balance plug down next to the battery and replace the cover.

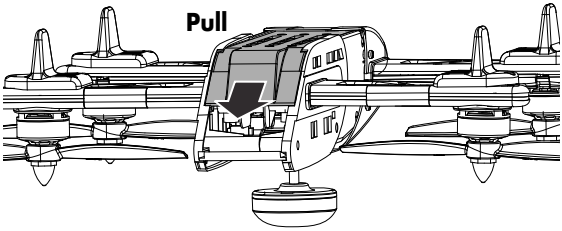

RADIO SYSTEM

Insert 4 AA batteries in the battery compartment in the back of the transmitter.

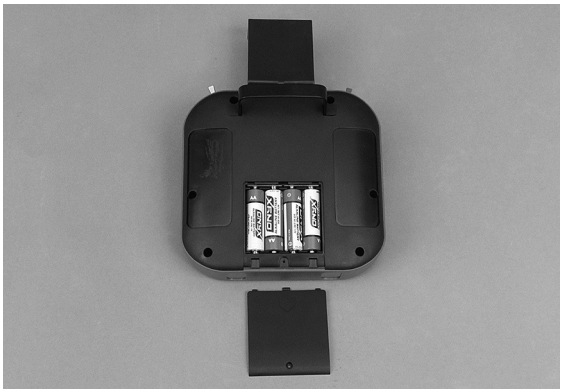

Turn on the transmitter and connect the battery to the Vusion. The quadcopter should beep twice when it is linked to the transmitter.

NOTE: ***Always*** turn the transmitter on first.

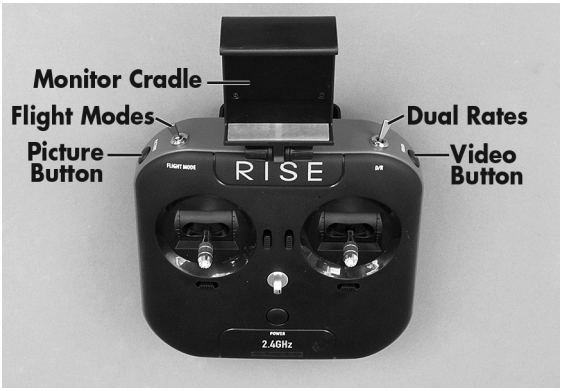

FLYING

MOTOR ARMING

While the throttle is at its **lowest** setting, hold the yaw control (left stick) to the right to arm the motors. Holding the yaw control to the left while the throttle is at its lowest setting will disarm the motors. The motors will also shut off if the throttle is its lowest setting for more than 3 seconds.

FLIGHT MODES

The Vusion has 3 flight modes.

Mode 1: This mode has autolevel, mild roll rates and very limited tilt angles. Ideal for the pilot who is moving up from an entry level quadcopter.

FLIGHT MODES	Switch Position	Stability Mode	Tilt Angle	Roll Rate
Mode 1	Away	Stability	30	Low
Mode 2	Middle	Stability	45	Medium
Mode 3	Forward	Rate	360	High

Mode 2: This mode still has autolevel, but has higher roll rates and a high tilt angle setting. This mode is for the more experienced pilot.

Mode 3: This mode (rate mode) has no limits on tilt and faster roll rates. The quad will **not** autolevel in this mode. This mode offers the most maneuverability but requires the pilot to be able to control the attitude of the quadcopter themselves.

It normally takes a week or two of practice to learn to fly rate mode. Start by flying Line of Sight (no FPV) until you can comfortably control the quad. If possible, fly in an open area over tall grass to minimize damage to the Vusion when you crash. When you are comfortable making a flip in this mode, you should be ready for FPV.

TAKEOFF AND LANDING

Turn on the transmitter and connect the flight battery to the VUSION FPV RACER. Place the quadcopter on a level surface and let it sit for 10 seconds to let the flight controller set up the gyros. Calibrate the sensors before your first flight (page 10).

Arm the motors by holding the yaw control to the right for a second, and back to center. The motors will start spinning when the motors are armed. Advance the throttle at a moderate speed to take off.

To land, hover the Vusion over the landing spot and slowly reduce the throttle. When the quadcopter is on the ground, disarm the motors by holding the left stick at its lowest point and move to the left. **Unplug** and remove the battery.

FPV

The Vusion has a built in FPV camera and 8 channel VTX that transmits on Raceband. The monitor will have to be set to the correct channel to display the feed from the camera.

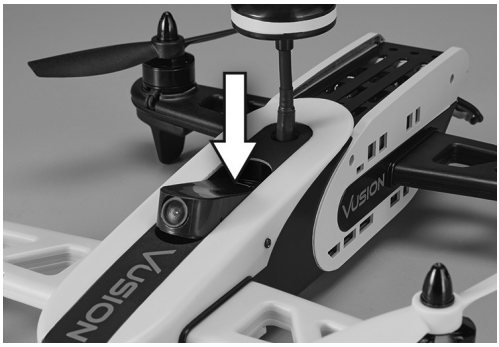

1. Power up the Vusion and raise the camera by pushing down on camera icon.

2. Attach the monitor antenna and turn on the FPV monitor.

3. If the monitor is not displaying a signal from the Vusion, hold the “B” button on the monitor for 2 seconds and release it. The monitor will scan all the channels and lock onto the closest signal.

4. Place the monitor in the cradle on the transmitter or inside the goggle.

If the VTX must use a different FPV channel, remove the rear cover by pushing down on the edge of the cover and sliding it back.

Tap the red button to cycle through the 8 channels that are available.

To see current band, channel and frequency on the monitor, select Band E with the “B” button and tap the CH button until the screen displays the feed from the camera.

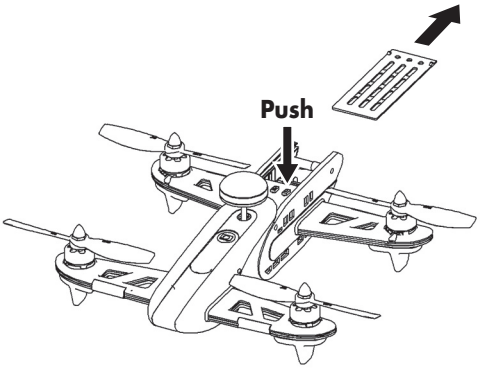

Flying FPV is more difficult than Line of Sight because it is difficult to determine altitude with just the camera. Practice in an open area with a spotter. If possible, fly over tall grass to minimize damage when you crash. When you are comfortable flying in an open area, practice flying a pre-set course. This will help you learn to corner faster.

FAILSAFE/BEACON

The Vusion will autoland and start beeping when the signal from the transmitter is lost. This feature can be used as a beacon to help locate the quadcopter when it has crashed by turning off the transmitter.

VUSION CAMERA

Video clips and still images from the Vusion’s camera can saved to an on board micro SD memory card (not included).

VIDEO

Pressing the video button will start and stop the video. The timer in the lower left corner of the monitor will be on while video is being recorded. The DVR will automatically save the video to the memory card every 4 minutes and start a new video. To avoid losing any of the video after landing, always stop the recording and wait 15 seconds before unplugging the battery from the Vusion.

STILL PHOTO

Pressing the “Picture” button will capture a still photo. The camera will not save the photo if a video is being recorded.

BATTERIES

The VUSION FPV RACER uses a 1500mA 3 cell LiPo. Typical flight time is 5 to 8 minutes depending on the flying style.

The flight controller does have a low voltage cutoff to protect the LiPo from damage. There is an alarm that will start beep and the rear LED panels will flash when the

battery voltage drops to 10.5V. You should land the quadcopter as soon as possible when you hear or see the alarm to avoid damaging the battery. The Vusion will autoland when the battery voltage gets below 9.7V. The flight battery should always be recharged before it is stored.

Warning: Your battery life will be reduced and the battery can be damaged any time the battery voltage is below 9V. Charging a LiPo battery that is damaged in any way can pose a fire hazard.

EXTERNAL RECEIVER

WARNING: Remove the props before connecting an external receiver to the Vusion.

The VUSION FPV RACER can be adapted to use an external receiver (one wire for each channel) with the RISE2509 Cable Set. **Note:** The stock transmitter must be used if recording photos or video by the on board DVR is desired.

The transmitter should have a new model set up using the following chart as a guide.

MODEL TYPE: Airplane

CHANNEL ASSIGNMENTS				
Channel	**Direction**	**End Points**	**Dual Rates**	**Expo**
Aileron	normal	100/100	80/100	–20/0
Elevator	reverse	100/100	80/100	–20/0
Throttle	reverse	100/100		
Rudder	reverse	100/100	80/100	–20/0
Gear	normal	100/100		
AUX	reverse	100/100		

SWITCH ASSIGNMENTS - Ch 5		
AUX	–100%	Stability 1
AUX	0%	Stability 2
AUX	100%	Rate

NOTE: Spektrum/JR systems should have opposite directions.

If your transmitter can set failsafe values for all the channels, set the roll & pitch channels to midstick and the throttle to its lowest setting to stop the motors. For transmitters that only set failsafe on the throttle channel, set the throttle to its lowest setting.

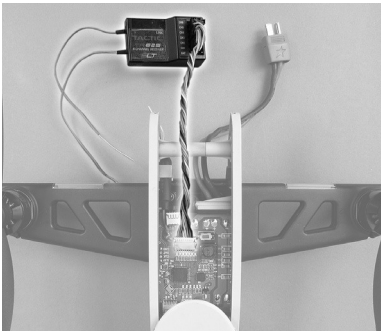

EXTERNAL RECEIVER CONNECTIONS

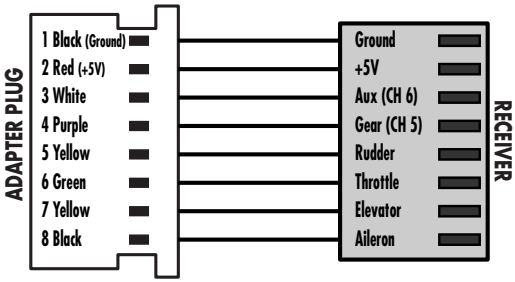

Plug the 8 wire cable into the receiver as shown. Channel 6 must be assigned to a switch so it can be used to change flight modes.

Turn on the transmitter and connect the battery to the Vusion. Perform a sensor calibration as described in Maintenance Section to verify that the control board is receiving signals from the receiver. The quadcopter will not enter the calibration mode if the receiver is wired incorrectly.

Arm the motors by holding the yaw control to the right. Advance the throttle and check for a motor not running. Bring the throttle back down to its lowest setting. The motors should stop after 5 seconds.

MAINTENANCE

PROPELLER INSTALLATION

Please refer to this diagram when installing or replacing the propellers to make sure each is installed on the correct motor.

CW – clockwise rotation when viewed from above (there is an "A" on the arms and the propellers).

CCW – counter clockwise rotation when viewed from above (there is a "B" on the arms and the propellers)

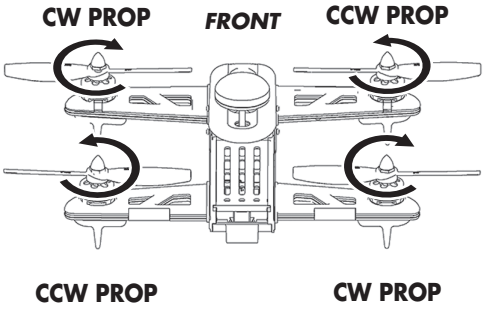

SENSOR CALIBRATION

1. **Calibrate the sensors before the first flight.** Turn on the transmitter. Center all the trim adjustments. To center the trim settings, hold down one side of the trim button until you hear a long beep. If the controller stops beeping, release the trim button and hold down the other side.

2. Place the Vusion on a level surface and link the quadcopter with the controller.

3. Press and hold the right stick in its lower right corner.

4. Move the left stick down and to the right. When the LEDs on the Vusion start to flash, release both sticks. The LEDs will stop flashing when the calibration is complete.

LINK TRANSMITTER

If the Vusion does not make a double chime when it is powered up and the transmitter is on, it may need to be relinked.

1. Turn off the transmitter.

2. Remove the rear cover. Press down on the rear edge and slide the cover out of the frame.

3. Connect the battery to the Vusion.

4. Press and hold the red button until the red and white LEDs on the board start flashing.

5. Turn on the transmitter. The board should make the second chime immediately.

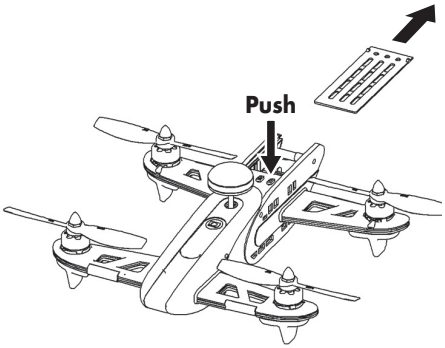

REMOVE FRONT MOTOR ARM

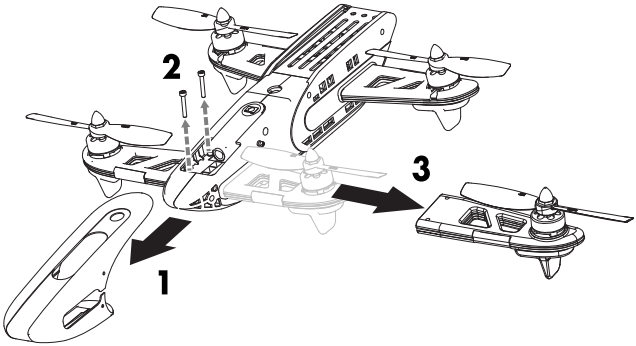

REMOVE REAR MOTOR ARM

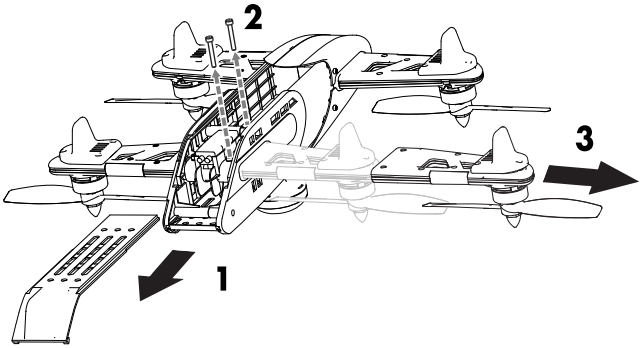

SEPARATE FRAME

To remove the Camera, VTX or Control Module, the frame must be separated. All 4 arms must be removed first.

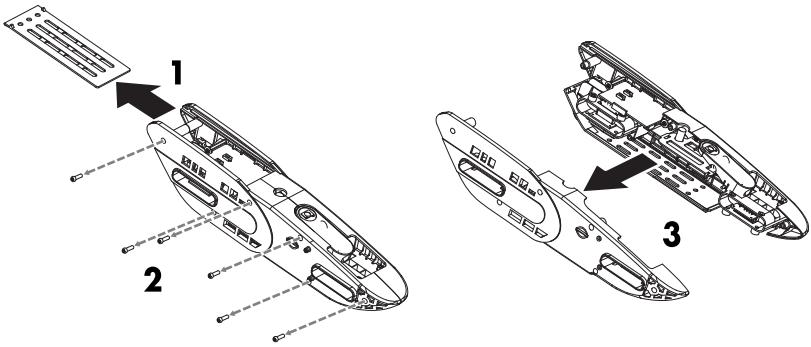

SPARE PARTS

1	RISE2020	FPV VTX Antenna
2	RISE2009	Prop Nuts CW/CCW
3	RISE2010	Props CW/CCW 2 Yellow/2 Black
4	RISE2019	Camera VTX CASE
5	RISE2001	Top Cover
6	RISE2017	25mW VTX Camera
6	RISE2018	200mW VTX Camera
7	RISE2007	FC Board Module with Arm sockets
8	RISE2025	Control Board Dampers (4)
9	RISE2015	Frame Left and Right
10	RISE2006	L/R Arm CCW Motor ESC
11	RISE2004	L/F Arm CW Motor ESC
12	RISE2003	R/F Arm CCW Motor ESC
13	RISE2005	R/R Arm CW Motor ESC
14	RISE2000	Canopy
15	RISE2026	Motor Shields (4)
16	RISE2022	LiPo 3S 11.1V 1500mAH
17	RISE2002	Battery Cover
18	RISE2013	L/R Arm Top and Bottom
19	RISE2011	L/F Arm Top and Bottom
20	RISE2012	R/F Arm Top and Bottom
21	RISE2014	R/R Arm Top and Bottom
22	RISE2016	LED Arm Covers (4)
23	RISE2008	Landing Gear (4) with mounting screws (12)
	RISE2021	Screw Set
	RISJ2000	Transmitter 6-Channel

GOGGLES PARTS

TACZ5610	FPV-G1 Head Strap
TACZ5612	FPV-G1 Face Plate Foam

MONITOR PARTS AND ACCESSORIES

TACZ5600	FPV-RM2 Sun Shield
TACZ5602	FPV-RM2 Tripod Mount
TACZ5300	FPV 5.8GHz RP-SMA TX Antenna Short 110mm 0.95dBi
TACZ5305	FPV 5.8GHZ Cloverleaf Antenna 3dBi

OTHER OPTIONAL PARTS AND ACCESSORIES

RISE2509	RX Flight control board extension cable
TACZ1010	4G Class 10 Micro Memory Card
TACZ5604	USB Micro SD Card Reader
TACL0625	TR625 6-Channel SLT Receiver Twin Antennas
TACJ2650	TTX650 6-Channel SLT Computer Transmitter
DTXP4620	Duratrax Li-24 2S-4S AC Balance Charger

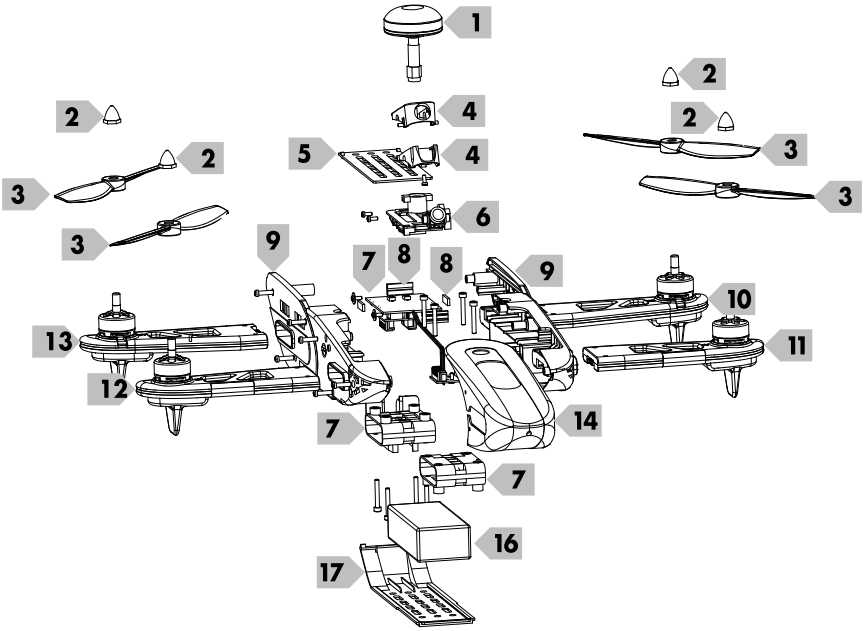
1
2
2
2
2
3
3
3
3
4
4
5
6
7
7
7
8
8
9
9
10
11
12
13
14
16
17

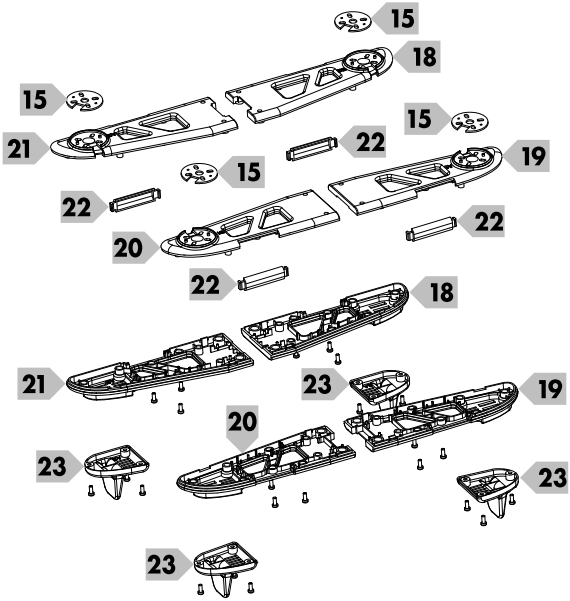
15
15
15
15
18
18
19
19
20
20
21
21
22
22
22
22
23
23
23
23

RISE™ VUSION EXTREME FPV RACE PACK

BATTERY PRECAUTIONS

The RISE Vusion uses a lithium polymer (LiPo) battery. Follow these precautions to ensure safe and trouble-free operation.

- *ALWAYS disconnect the battery from the quadcopter when not in use.*
- *Do not attempt to use this charger with NiCd or NiMH battery packs.*
- *Do not attempt to use a damaged battery.*
- *This product contains a LiPo battery that must be recycled or disposed of properly.*
- *Do not leave the charger unattended while charging. Disconnect the battery and unplug the charger immediately if either becomes hot! However, it is normal for the charger to get warm.*
- *Disconnect the battery from the charger and carefully move the battery to a fireproof location if the battery begins to swell or smoke!*
- *Never allow the battery temperature to exceed 140° F [60° C].*
- *Do not attempt to charge a battery if it is swollen or hot.*
- *Do not place the charger or any battery on a flammable surface or near combustible materials while in use.*
- *Never disassemble or modify pack wiring in any way or puncture cells.*
- *Never charge inside a vehicle.*
- *Always disconnect the battery and unplug the charger when not in use.*
- *Land your model immediately when the LEDs flash to indicate that the battery power is low. Recharge the battery before attempting another flight. A dangerous situation can occur when attempting to recharge an over-discharged battery!*
- *ALWAYS keep a supply of sand accessible when charging. Dumping sand on the battery will extinguish a LiPo chemical fire.*
- *ALWAYS KEEP OUT OF REACH OF CHILDREN*

FCC PRECAUTIONS

FCC RADIATION EXPOSURE STATEMENT

This equipment complies with FCC RF radiation exposure limits set forth for an uncontrolled environment. This transmitter must not be co-located or operating in conjunction with any other antenna or transmitter.

Any Changes or modifications not expressly approved by the party responsible for compliance could void the user's authority to operate the equipment.

This device complies with part 15 of the FCC rules. Changes or modifications not expressly approved by Tactic will void the user's authority to operate this Tx. Operation is subject to the following two conditions:

(1) This device may not cause harmful interference.
(2) This device must accept any interference received, including interference that may cause undesired operation.

Note: *This equipment has been tested and found to comply with the limits for a Class B digital device, pursuant to part 15 of the FCC Rules. These limits are designed to provide reasonable protection against harmful interference in a residential installation. This equipment generates uses and can radiate radio frequency energy and, if not installed and used in accordance with the instructions, may cause harmful interference to radio communications. However, there is no guarantee that interference will not occur in a particular installation. If this equipment does cause harmful interference to radio or television reception, which can be determined by turning the equipment off and on, the user is encouraged to try to correct the interference by one or more of the following measures:*

- *Reorient or relocate the receiving antenna.*
- *Increase the separation between the equipment and receiver.*
- *Connect the equipment into an outlet on a circuit different from that to which the receiver is connected.*
- *Consult the dealer or an experienced radio/TV technician for help*

RISE J2000 Transmitter FCC ID: IYFJ2000
RISE 25mW VTx FCC ID: IYF0205

CE COMPLIANCE INFORMATION FOR THE EUROPEAN UNION

INSTRUCTIONS FOR DISPOSAL OF WASTE EQUIPMENT BY PRIVATE USERS IN THE EUROPEAN UNION:

This symbol on the product or its packaging indicates this product must not be disposed of with other household waste. Instead, it is the user's responsibility to dispose of their waste equipment by handing it over to a designated collection point for the recycling of waste electrical and electronic equipment. The separate collection and recycling of your waste equipment at the time of disposal will help to conserve natural resources and ensure that it is recycled in a manner that protects human health and the environment. For more information about where you can drop off your waste equipment for recycling, please contact your local city office, your household waste disposal service or location where you purchased the product.

DECLARATION OF CONFORMITY:

Product: *RISE 2.4GHz 6-Channel Tx Rx*
Item number: RISJ2000 J2000
Equipment class: 1

J2000 transmitter: The objects of the declaration described here are in conformity with the requirements of the specifications listed below, following the provisions of the European 2014/35/EU Low Voltage Directive:

EN 60950-1:2013 Safety

The objects of the declaration described here are in conformity with the requirements of the specifications listed below, following the provisions of the European R&TTE directive 1999/5/EC:

EN300 328 V1.9.1.

Technical requirements for radio equipment

ETSI EN 300 328 V1.9.1 (2015-02); ETSI EN 301 489-1 V1.9.2 (2011-09); ETSI EN 301 489-3 V1.6.1 (2013-08); EN 62479:2010 General EMC requirements for radio equipment

Product: *RISE 5.8GHz 25mW VTx*

Technical requirements for radio equipment

ETSI EN 300 440-2 V1.4.1 (2010-08); ETSI EN 301 489-1 V1.9.2 (2011-09); ETSI EN 301 489-3 V1.6.1 (2013-08); EN 62479:2010 General EMC requirements for radio equipment

Hobbico, Inc.
2904 Research Road
Champaign, IL USA 61826

Distributed in Europe by Revell GmbH
D-32257 Bünde Germany

MADE IN CHINA

© 2016 RISE, a Hobbico company. RISE0200/05 Addn1