Safety Precautions

- Adult supervision required.
- Always install the propeller guards before flying.
- Calibrate the Flitt accelerometers before each flying session.
- Do not touch the spinning propellers.
- Keep your face and body as well as all spectators away from the propellers.
- Stay clear of buildings, high voltage wires, trees, shrubbery or groups of people.
- Don't fly in bad weather conditions, such as in high wind, rain, or snow.
- Operating Temperature Range: 32°F to 104°F (0°C to 40°C).
- Always keep Flitt in your line of sight.
- Maintain a safe pilot-to-device distance while flying.
- Flitt is not a toy. If not operated correctly, it could possibly cause injury to you or spectators and damage to property.
- Do not alter or modify, as doing so may make it unsafe or unflyable.
- You must check the operation of Flitt before every flight to insure that it has remained structurally sound.

flitt™

Quick Start Guide

See setup and Flying instructions inside.
flittcamera.com

Battery Precautions

The Flitt is equipped with a rechargeable 3.7V Lithium Polymer (LiPo) battery. Please pay attention to the following cautions for safe use:

LiPo

- KEEP OUT OF REACH OF CHILDREN.
- LiPo batteries must be recycled or disposed of properly.
- Do not use this product if the Flitt was severely crashed and the battery possibly damaged.
- Never disassemble, puncture or modify the Flitt battery.
- Always turn off Flitt power after each use.
- Only charge using a USB 5.0V 2A max power supply.
- Do not charge inside your car.
- Do not leave unattended while charging.
- Allow Flitt to cool for 30 minutes before recharging.
- Always place Flitt on a fireproof surface while charging.
- Keep away from combustible materials while charging.
- Unplug the charger immediately if it or the battery becomes hot! However, it is normal for the charger and battery to get warm. Disconnect from the charger and quickly move to a fireproof location if the battery begins to get hot or smoke!
- Keep a supply of sand accessible when charging. Dumping sand on the battery will extinguish a LiPo chemical fire.
- Always disconnect the charger after charging is complete.

Camera

Single shot: Press the camera icon or the up/down volume button on your mobile device. Self-Timer: Push and "hold" the camera icon. Choose timer and then either 3S or 10S. Multi-picture Burst: Push and "hold" the camera icon. Choose Burst, and then choose the number of pictures you want to take in a burst.

Video Record

To start recording a video, select the video icon. To stop, push the square icon.

Speed Selector

Push this icon to adjust your flight speed. Use low (L) or medium (M) speeds indoors. If you have plenty of room to fly, use high (H) speed to fly fast.

Emergency Landing

Flash

Instant Share

This feature loads your pictures or videos to your favorite social media quickly. You can set this up before you fly. Go to Settings and choose which social media service you want to use and how you want to add a caption. Then go back to the main screen and select the instant share button and then take another picture. You'll be prompted to sign in to your selected service.

When ready to fly, first select either instant share 1 or instant share 2. Next, take pictures or videos as you fly. During your flight (for iOS) or after (for Android), your pictures will be sent over your chosen service.

Controls

Use the directional control stick, altitude slide bar, and left/right swipe area to control the position of Flitt. For easiest control, make small movements and then let go. To rotate, swipe the screen left or right. If you want to rotate constantly, swipe one direction and hold. For indoor flight, there are fine tune buttons to compensate for any slight drift.

The orientation of the controls are as if you were sitting inside Flitt. So, if you rotate, you may find that moving left moves Flitt towards or away from you. With practice, this will become second nature.

Altitude Slide Bar

Screen Gesture Swipe Control

This part of your screen shows you what the Flitt camera sees. The image can be moved to the left or the right by swiping the screen. This rotates Flitt so the camera will see the picture you want to take.

Battery

Memory Card Capacity

Wi-Fi

Safety Unlock

Gallery

Settings

From this menu, you can set up and customize Flitt, manually calibrate the sensors, access the help menus and the Start Up slide show.

One-tap Take Off/ Land

Take Off | Land

Frame your subject

You can move the image you see on the screen from side to side by swiping the open screen area. This rotates Flitt so that you can easily frame your perfect shot! For framing up and down, use the altitude slider in small movements.

Setup

1: Charge the battery

Unlock the battery.

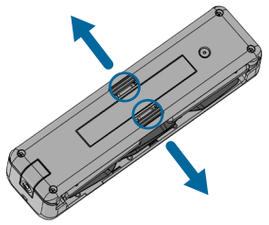

Grip the battery from the sides and push up.

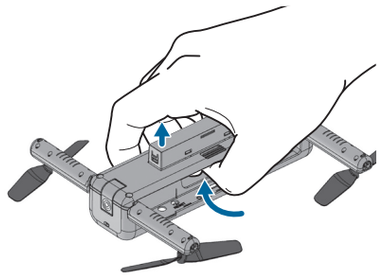

Plug the charger into any standard USB power source.

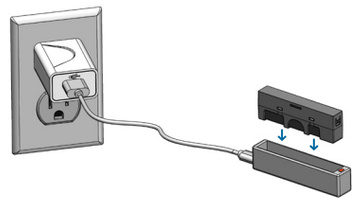

The LED will be solid while charging.
The LED will flash when finished.
Always disconnect when finished.

Insert the battery and lock in place.

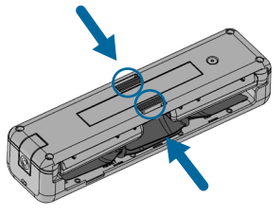

2: Download the app

Search the app store for "Flitt."

Download on the App Store

GET IT ON Google Play

Apple and the Apple logo are trademarks of Apple Inc., registered in the U.S. and other countries.
App Store is a service mark of Apple Inc. Android and Google Play are trademarks of Google Inc.

3: Turn on

Push the power button and hold for a few seconds until the LED stays on.

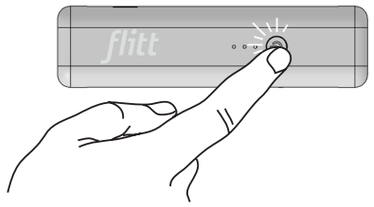

4: Open the arms

Open the arms fully.

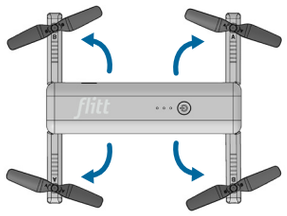

5: Attach the propeller guards

Install a prop guard into the end of each arm.
Match A guards to A arms and B guards to B arms.

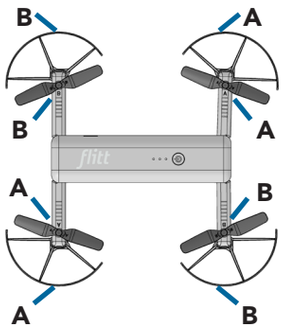

6: Connect your phone

Go to Wi-Fi Settings on your phone and look for the network Flitt-******.
Connect and enter Password: 12345678

7: Open the app

Watch the slide show to learn about the controls and features.

Fly

1: Get Ready.

Position Flitt on a level surface with the camera facing you.

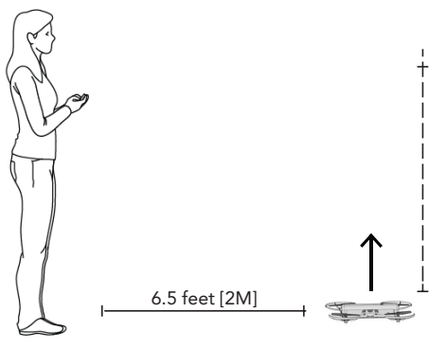

In settings, you can set the camera to face away from you to capture scenery.

Push "unlock" and hold for 2 seconds

Calibrate the sensors if prompted.

Push "Take off" when green.
For your safety, Flitt will re-lock after five seconds to prevent unintentional takeoffs.

We recommend recalibrating the sensors after a hard landing or crash.
Access this feature through the settings menu.

2: Controls

Move slider to change altitude.

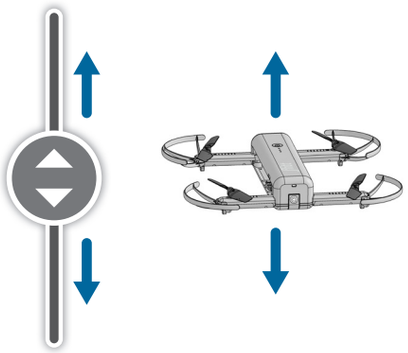

Move controls in the direction you want to travel.

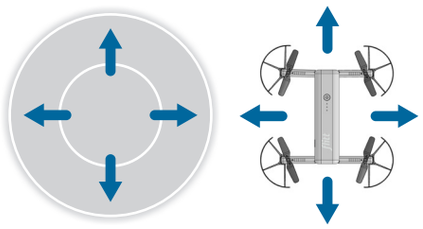

3: Land

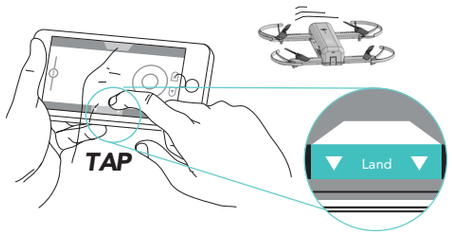

To land immediately, push **EMERGENCY**

4: Power off

Push and hold until the LED turns off.

It's easiest to fold up Flitt starting with the back arms first. Now head out to your next photo shoot!

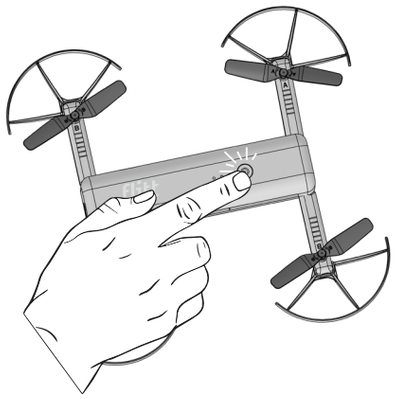

FCC Statement

This device complies with part 15 of the FCC rules. Operation is subject to the following two conditions.

(1) This device may not cause harmful interference.
(2) This device must accept any interference received, including interference that may cause undesired operation.

ANY CHANGES OR MODIFICATIONS NOT EXPRESSLY APPROVED BY THE PARTY RESPONSIBLE FOR COMPLIANCE COULD VOID THE USER'S AUTHORITY TO OPERATE THE EQUIPMENT.

This equipment has been tested and found to comply with the limits for a Class B digital device, pursuant to Part 15 of the FCC Rules. These limits are designed to provide reasonable protection against harmful interference in a residential installation. This equipment generates, uses and can radiate radio frequency energy and, if not installed and used in accordance with the instructions, may cause harmful interference to radio communications. However, there is no guarantee that interference will not occur in a particular installation.

If this equipment does cause harmful interference to radio or television reception, which can be determined by turning the equipment off and on, the user is encouraged to try to correct the interference by one or more of the following measures:

- Reorient or relocate the receiving antenna.
- Increase the separation between the equipment and receiver.
- Connect the equipment into an outlet on a circuit different from that to which the receiver is connected.
- Consult the dealer or an experienced radio/TV technician for help.

FCC Radiation Exposure Statement:

- This equipment complies with FCC radiation exposure limits set forth for an uncontrolled environment.
- This transmitter must not be co-located or operating in conjunction with any other antenna or transmitter.
- This equipment should be installed and operated with minimum distance 20cm between the radiator& your body.

ISEDC RSS Warning

This device complies with ISEDC licence-exempt RSS standard (s). Operation is subject to the following two conditions:

(1) this device may not cause interference

(2) this device must accept any interference,including interference that may cause undesired operation of the device

Le présent appareil est conforme aux CNR d'ISEDC applicables aux appareils radio exempts de licence. L'exploitation est autorisée aux deux conditions suivantes:

(1) l'appareil ne doit pas produire de brouillage, et

(2) l'utilisateur de l'appareil doit accepter tout brouillage radioélectrique subi, même si le brouillage est susceptible d'en compromettre le fonctionnement.

ISEDC Radiation Exposure Statement:

- This equipment complies with ISEDC RF radiation exposure limits set forth for an uncontrolled environment.
- This transmitter must not be co-located or operating in conjunction with any other antenna or transmitter.
- This equipment should be installed and operated with minimum distance 20cm between the radiator& your body.

- Cet appareil est conforme aux limitesd'exposition de rayonnement RF ISEDC établiespour un environnement
- Cetémetteur ne doit pas être co-implanté oufonctionner en conjonction avec toute autreantenne ou transmetteur non contrôlé.
- Cet équipement doit être installé et utilisé avec une distance minimale de 20cm entre leradiateur & votre corps.

FCC ID: IYFFLITT IC: 11104A-FLITT

© 2017 Flitt™, a Hobbico® company.